PARTS MANUAL

Models
EH30 / EH34
ENGINES

PUB-EP5505A
Rev. 01/00

Robin America, Inc.

940 Lively Blvd. • Wood Dale, IL 60191 • Phone: 630-350-8200 • Fax: 630-350-8212
e-mail: sales@robinamerica.com • www.robinamerica.com

© Copyright 2000 Robin America, Inc.

HOW TO USE THIS MANUAL

Robin engines are identified by MODEL, SPECIFICATION, and CODE NUMBER. For each model there may be many different versions called specifications. Each specification will be unique in some way. The difference may only be the paint color or it may have a different type of PTO or some other significant difference.

In order the identify the correct service part number, it is important to confirm the specification and code numbers for your engine. The specification and code number together are know as the PRODUCT NUMBER.

All Robin 4 cycle engines have a Product Number label similar to the label illustrated below.

PRODUCT NUMBER LABEL

PRODUCT NUMBER LABEL LOCATIONS

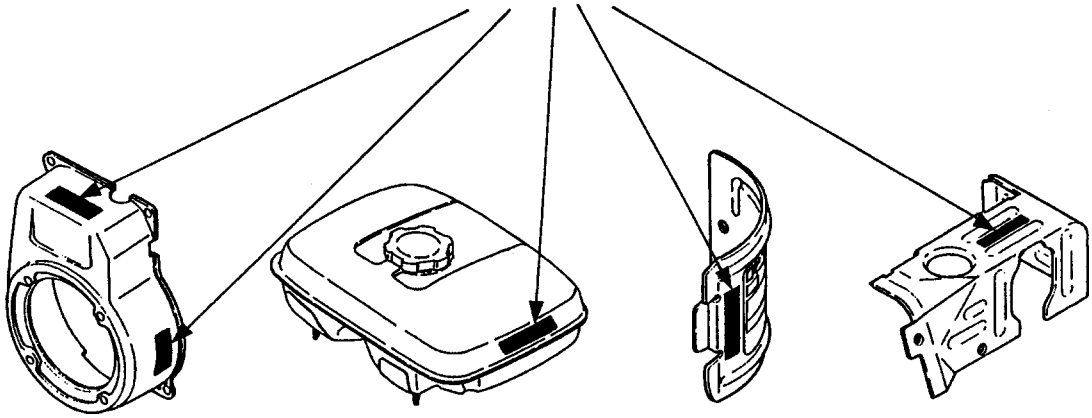

The Product Number Label has a 15 digit alphanumeric string that consists of the SPECIFICATION (SPEC) number (11 digits) and the CODE number (4 digits). Please note the illustration below:

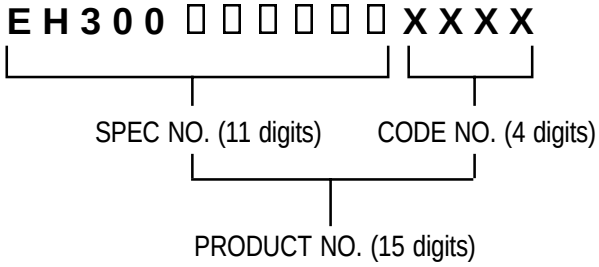

MANUAL LAYOUT

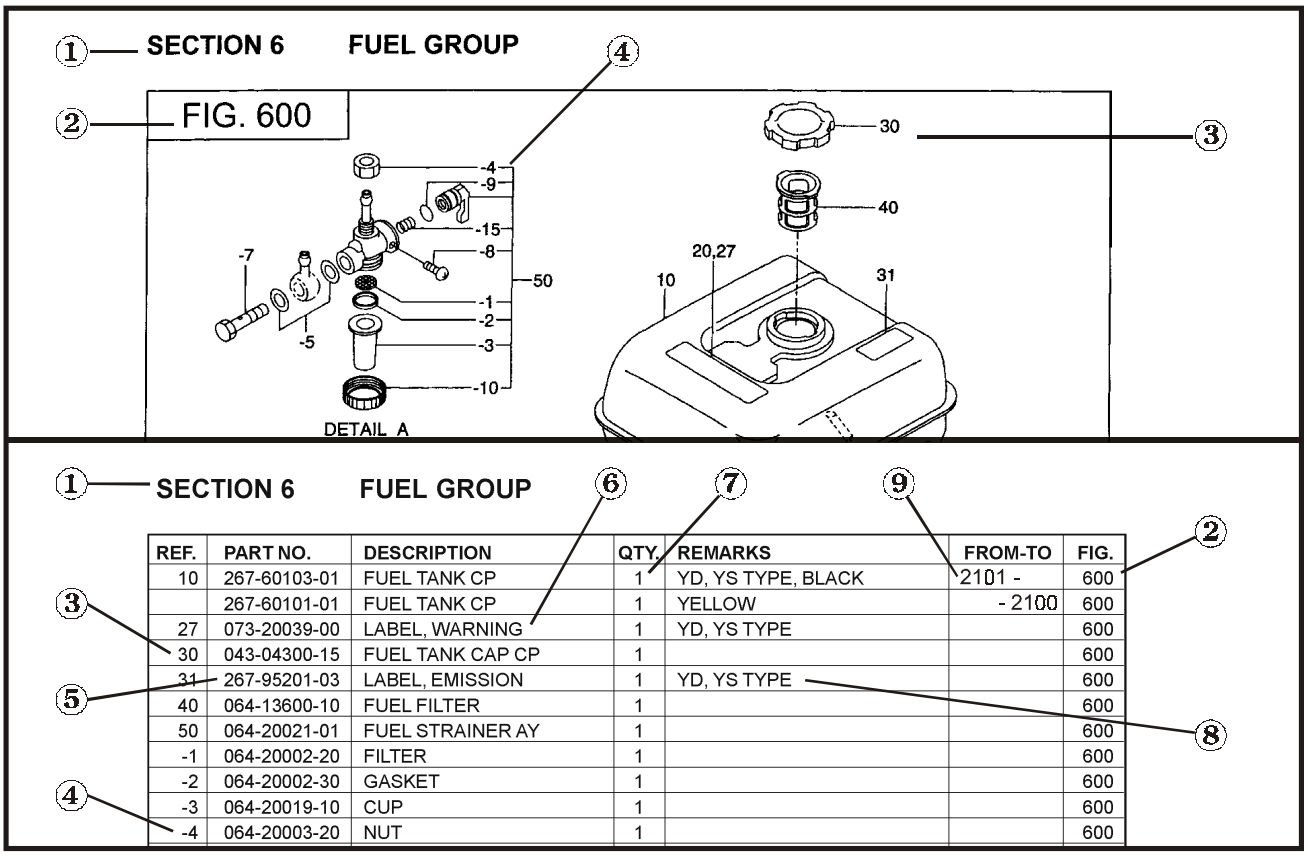

1 SECTION 6 FUEL GROUP

6 7 9 2 3 5 8 4

REF.	PART NO.	DESCRIPTION	QTY.	REMARKS	FROM-TO	FIG.
10	267-60103-01	FUEL TANK CP	1	YD, YS TYPE, BLACK	2101 -	600
	267-60101-01	FUEL TANK CP	1	YELLOW	- 2100	600
27	073-20039-00	LABEL, WARNING	1	YD, YS TYPE		600
30	043-04300-15	FUEL TANK CAP CP	1			600
31	267-95201-03	LABEL, EMISSION	1	YD, YS TYPE		600
40	064-13600-10	FUEL FILTER	1			600
50	064-20021-01	FUEL STRAINER AY	1			600
-1	064-20002-20	FILTER	1			600
-2	064-20002-30	GASKET	1			600
-3	064-20019-10	CUP	1			600
-4	064-20003-20	NUT	1			600

1. SECTION NAME — Parts are broadly classified according to their functions. Refer to the Group Index (table of contents) for respective section name.

2. FIG. No. — The FIG. number indexes the reference and part numbers to the illustration. Figure numbers that vary only in the tens place (i.e..: 700 and 710) are in a group of the same section (i.e..:Electrical Device Group).

3. REF. No . — The Reference number identifies the part illustration with the corresponding part number in the part list.

4. SUBASSEMBLY — SUBASSEMBLY parts of part assembly are listed below the assembly part. The subassembly part reference number is indicated by the number led by "-" such as "-1", "-2".

5. PART NUMBER — It is the number assigned for sales unit. Use the PART No. when making an order.

6. DESCRIPTION — It is designation of the part.

7. QTY. — Quantity of each part used for each product.

8. REMARKS — This gives a distinctive feature and/or a supplementary comment for the type, the specification, and the part concerned. It also shows part number(s) interchangeable for the part.

9. FROM-TO — This section shows the CODE No. to indicate the history of progress in which improved parts have been introduced in the product. The FROM-TO CODE No. helps to identify PART No. being employed in the product concerned. See the examples below:

-	The part is used in the product irrespective of CODE No.
2101-	The part is used in the products with CODE No. of 2101 and after this number.
- 2100	The part is used in the products with CODE No. of 2100 and before this number.

GROUP INDEX

Group Name	Page
CRANKCASE GROUP	6
CRANKSHAFT GROUP	10
INTAKE and EXHAUST GROUP	12
GOVERNOR GROUP	18
COOLING and STARTING GROUP	20
FUEL, LUBRICANT GROUP	24
ELECTRIC DEVICE GROUP - RECOIL START	28
ELECTRIC DEVICE GROUP - ELECTRIC START	32
ELECTRIC DEVICE GROUP - 150 WATT CHARGING	40
ELECTRIC DEVICE GROUP - OIL SENSOR	44

INDEX OF DESCRIPTION SYMBOLS

SYMBOL	DESCRIPTION	SYMBOL	DESCRIPTION
AY	ASSEMBLY	P=	PITCH (in mm)
CP	COMPLETE	P.T.O. (PTO)	POWER TAKE OFF
EX	EXPORT (from Japan)	REF.	REFERENCE
FIG.	FIGURE	R.H. (RH)	RIGHT HAND SIDE
FR.	FRONT	RR.	REAR
"	INCH	STD.	STANDARD
INCL.	INCLUDE	SW	SWITCH
~L	LITER	T=	THICKNESS (in mm)
L=	LENGTH (in. mm)	UN	UNIT
L.H. (LH)	LEFT-HAND SIDE	U.S.	UNDER SIZE
MECH	MECHANICAL	~V	VOLTAGE
NO (NON)	NONE	~W	WATT
OPT.	OPTIONAL	W/	WITH
O.S.	OVER SIZE	W/O	WITHOUT

FIG. 100

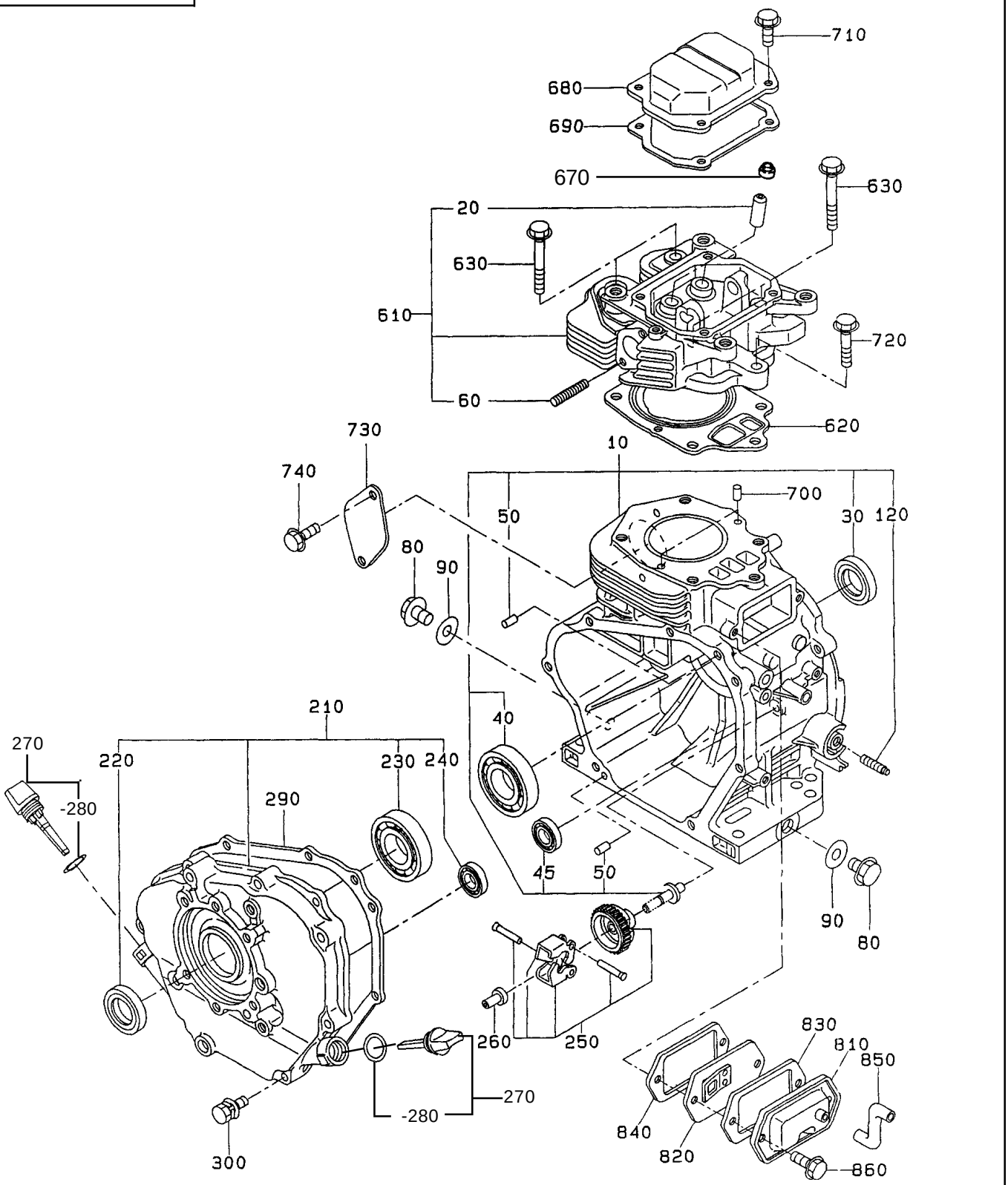
710
680
690
670
630
20
630
610
720
60
620
730
740
10
700
50
30
120
80
90
210
40
270
220
230
240
290
-280
45
50
90
80
260
250
830
810
850
270
-280
840
820
860
300

SECTION 1 CRANKCASE GROUP

REF.	PART NO.	DESCRIPTION	QTY.	REMARKS	FROM-TO	FIG.
10	246-10101-31	CRANKCASE	1	EH30, single balancer	from S/N 1023377	100
	246-10101-21	CRANKCASE	1	EH30, double balancer	to S/N 1023376	100
10	247-10101-31	CRANKCASE	1	EH34, single balancer	from S/N 1029603	100
	247-10101-21	CRANKCASE	1	EH34, double balancer	to S/N 1029602	100
20	246-14202-03	VALVE GUIDE	2			100
30	044-03500-90	OIL SEAL	1	Ø 35 X Ø 48 X 8		100
40	060-03500-10	BALL BEARING	1			100
45	060-01500-60	BALL BEARING	1	EH30	from S/N 1023377	100
	060-01500-60	BALL BEARING	2	EH30	to S/N 1023376	100
45	060-01500-60	BALL BEARING	1	EH34	from S/N 1029603	100
	060-01500-60	BALL BEARING	2	EH34	to S/N 1029602	100
50	031-00600-20	DOWEL PIN	2			100
60	010-50804-30	STUD	2			100
80	040-11400-30	PLUG	2			100
90	021-11400-20	GASKET	2			100
120	010-50801-20	STUD	1			100
210	246-11002-31	MAIN BEARING COVER	1	EH30	from S/N 1023377	100
	246-11002-21	MAIN BEARING COVER	1	EH30	to S/N 1023376	100
210	246-11002-31	MAIN BEARING COVER	1	EH34	from S/N 1029603	100
	246-11002-21	MAIN BEARING COVER	1	EH34	to S/N 1029602	100
220	044-03500-90	OIL SEAL	1	Ø 35 X Ø 48 X 8		100
230	060-03500-10	BALL BEARING	1			100
240	060-01500-60	BALL BEARING	1	EH30	from S/N 1023377	100
	060-01500-60	BALL BEARING	2	EH30	to S/N 1023376	100
240	060-01500-60	BALL BEARING	1	EH34	from S/N 1029603	100
	060-01500-60	BALL BEARING	2	EH34	to S/N 1029602	100
250	246-45001-01	GOVERNOR GEAR	1			100
260	205-41901-03	GOVERNOR SLEEVE	1			100
270	224-63601-03	OIL GAUGE	2	Includes item -280		100
	224-63601-03	OIL GAUGE	1	W / OIL SENSOR		100
- 280	021-32000-10	GASKET	2			100
	021-32000-10	GASKET	1	W / OIL SENSOR		100
290	246-15101-03	GASKET, bearing cover	1			100
300	001-13084-00	BOLT and WASHER	7			100
610	246-13001-31	CYLINDER HEAD	1	EH30 / Vertical spark plug		100
	247-13003-01	CYLINDER HEAD	1	EH34 / Vertical spark plug		100
	247-13101-11	CYLINDER HEAD	1	EH34 / Inclined spark plug, short studs		100
620	247-15001-13	GASKET, cylinder head	1			100
630	011-01000-40	FLANGE BOLT	4			100
670	239-16302-13	OIL SEAL	1	EH30	to S/N 1023376	100
	239-16302-13	OIL SEAL	1	EH34		100
680	246-15501-02	ROCKER COVER	1			100

FIG. 100

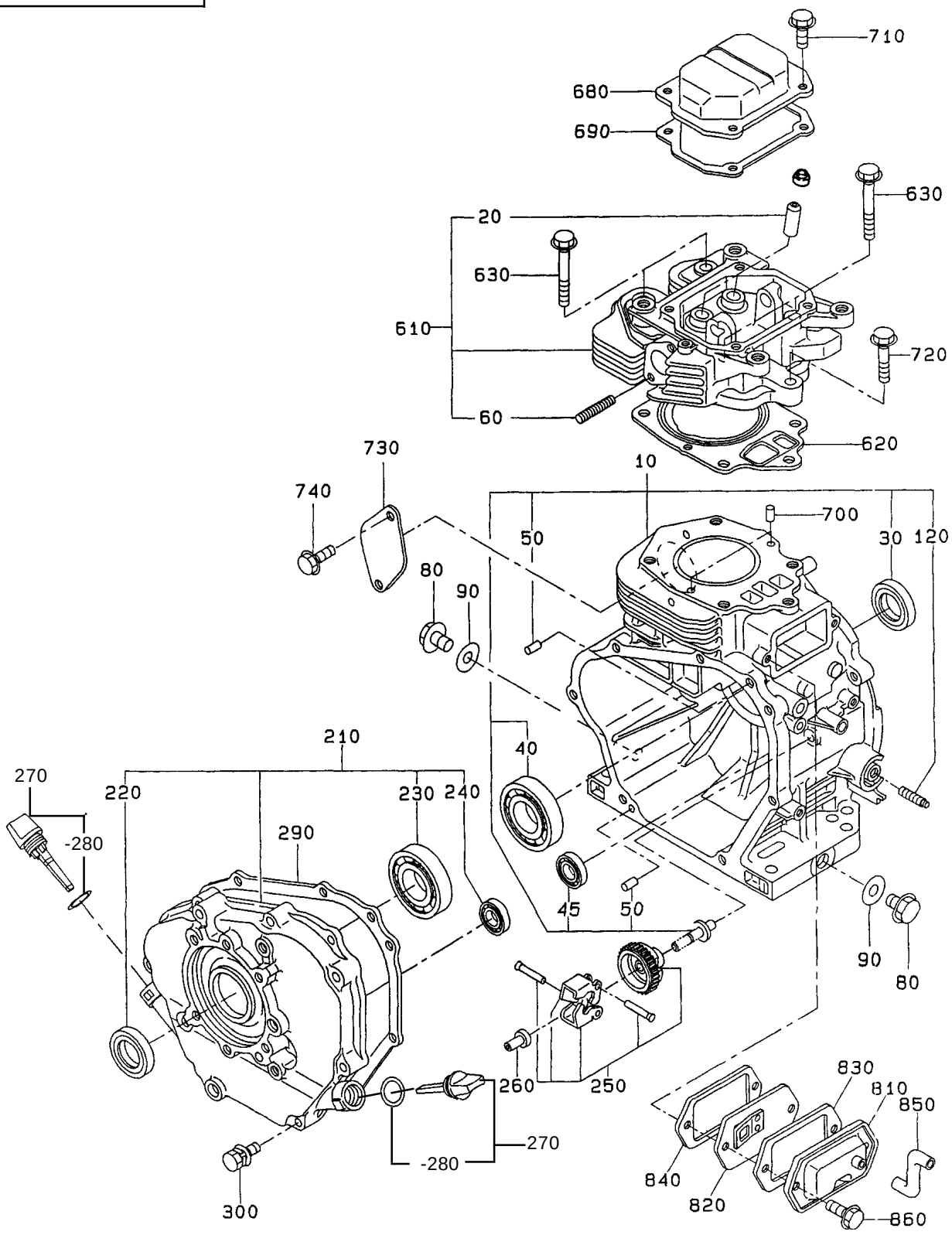
710
680
690
630
20
630
610
720
60
620
730
740
10
700
50
30
120
80
90
210
40
270
220
230
240
290
-280
45
50
90
80
260
250
830
810
850
270
-280
840
820
860
300

SECTION 1 CRANKCASE GROUP

REF.	PART NO.	DESCRIPTION	QTY.	REMARKS	FROM-TO	FIG.
690	246-16002-13	GASKET, rocker cover	1			100
700	031-00600-20	DOWEL PIN	2			100
710	011-00600-20	FLANGE BOLT	4			100
720	011-01000-20	FLANGE BOLT	1			100
730	224-17101-03	BLIND COVER	1	Recoil start		100
740	001-65081-20	BOLT	2	Recoil start		100
810	246-14301-01	BREATHER COVER	1			100
820	246-14401-01	BREATHER PLATE	1			100
830	246-16006-03	GASKET, breather cover	1			100
840	246-16007-13	GASKET, breather plate	1			100
850	246-10801-03	RUBBER PIPE	1			100
860	011-00600-30	FLANGE BOLT	2			100

FIG. 200

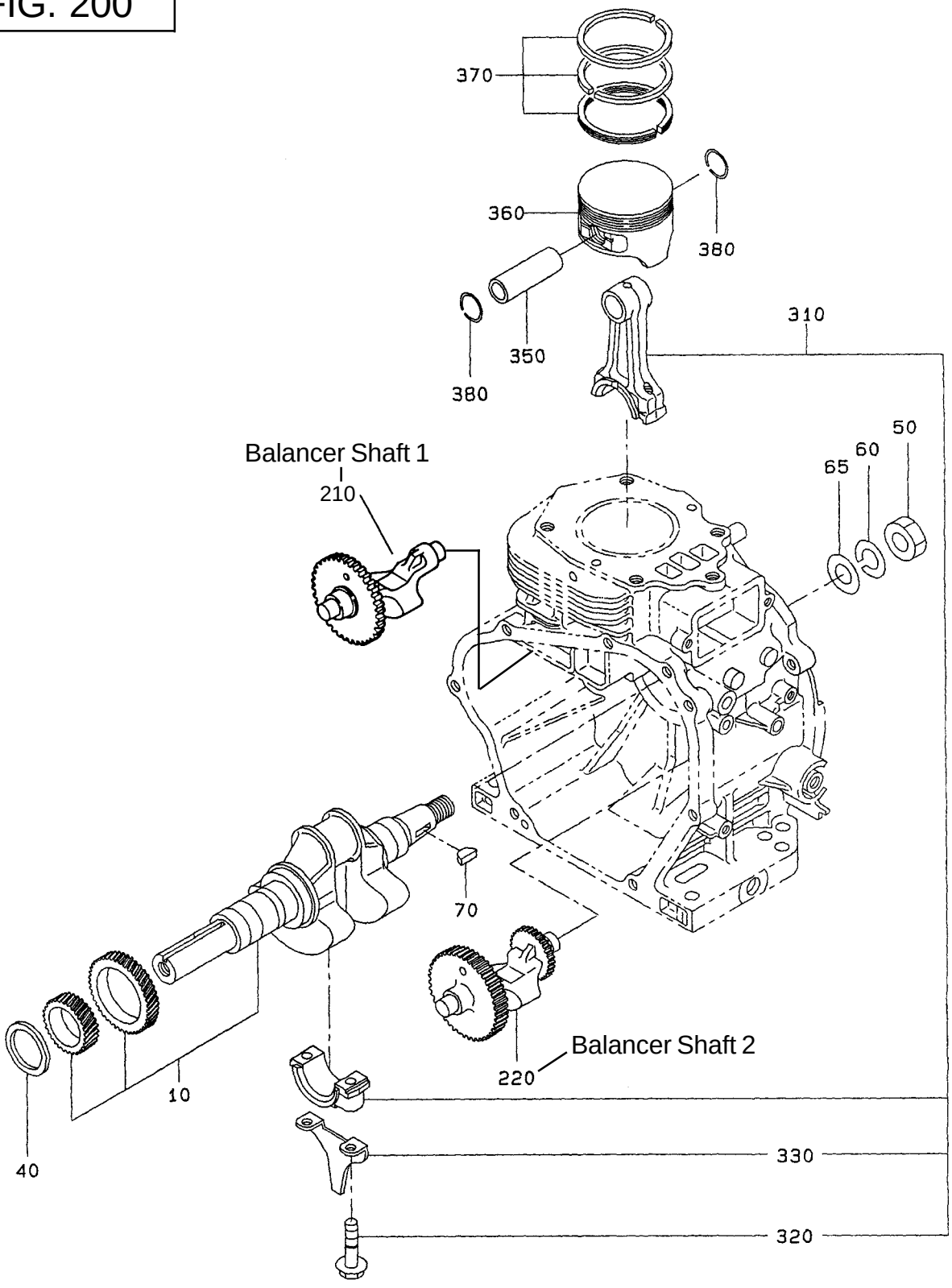
370
360
380
380
350
310
Balancer Shaft 1
210
50
60
65
70
Balancer Shaft 2
220
10
40
330
320

SECTION 2 CRANKSHAFT GROUP

REF.	PART NO.	DESCRIPTION	QTY.	REMARKS	FROM-TO	FIG.
10	246-20901-01	CRANKSHAFT	1	SAE 1 in. Keyway		200
	246-20902-01	CRANKSHAFT	1	SAE 1.125 in. Keyway		200
	246-21001-01	CRANKSHAFT	1	SAE PUMP		200
	246-21201-01	CRANKSHAFT	1	SAE TAPER		200
	246-20201-01	CRANKSHAFT	1	METRIC KEY 25mm		200
	246-20903-01	CRANKSHAFT	1	METRIC PUMP		200
	246-20701-01	CRANKSHAFT	1	METRIC TAPER		200
40	023-03501-60	SPACER ,T =0.6mm	1	Select 1 piece only		200
	023-03501-70	SPACER ,T =0.8mm	1	Select 1 piece only		200
	023-03501-80	SPACER ,T =1.0mm	1	Select 1 piece only		200
50	002-18180-00	NUT	1			200
60	003-20180-00	SPRING WASHER	1			200
65	003-10180-00	WASHER	1			200
70	005-32054-01	WOODRUFF KEY	1			200
210	246-24101-13	BALANCER SHAFT 1	1	EH30	to S/N 1023376	200
	246-24101-13	BALANCER SHAFT 1	1	EH34	to S/N 1029602	200
220	246-24102-23	BALANCER SHAFT 2	1	EH30, with 1 balancer	from S/N 1023377	200
	246-24102-13	BALANCER SHAFT 2	1	EH30, with 2 balancers	to S/N 1023376	200
	246-24102-23	BALANCER SHAFT 2	1	EH34, with 1 balancer	from S/N 1029603	200
	246-24102-13	BALANCER SHAFT 2	1	EH34, with 2 balancers	to S/N 1029602	200
310	246-22501-00	CONNECTING ROD AY	1	Includes 320, 330		200
320	246-23001-03	CONNECTION ROD BOLT	2			200
330	246-23101-13	OIL SCRAPER	1			200
350	246-23301-03	PISTON PIN	1			200
360	246-23401-13	PISTON	1	EH30, STD		200
	246-23402-13	PISTON	1	EH30, oversize 0.25mm		200
	246-23403-13	PISTON	1	EH30, oversize 0.50mm		200
360	247-23401-13	PISTON	1	EH34, STD		200
	247-23402-13	PISTON	1	EH34, oversize 0.25mm		200
	247-23403-13	PISTON	1	EH34, oversize 0.50mm		200
370	246-23501-17	PISTON RING SET	1	EH30, STD		200
	246-23502-17	PISTON RING SET	1	EH30, oversize 0.25mm		200
	246-23503-17	PISTON RING SET	1	EH30, oversize 0.50mm		200
370	247-23501-07	PISTON RING SET	1	EH34, STD		200
	247-23502-07	PISTON RING SET	1	EH34, oversize 0.25mm		200
	247-23503-07	PISTON RING SET	1	EH34, oversize 0.50mm		200
380	056-52100-20	CLIP	2			200

*** The Balancer Shaft 1 was eliminated on the EH30 and EH34 starting with S/N 1023377 and S/N 1029603 respectively.

FIG. 300

NEW STYLE VALVE RETAINER

Collet type
EH30 from S/N 1033819
EH34 from S/N 1053613

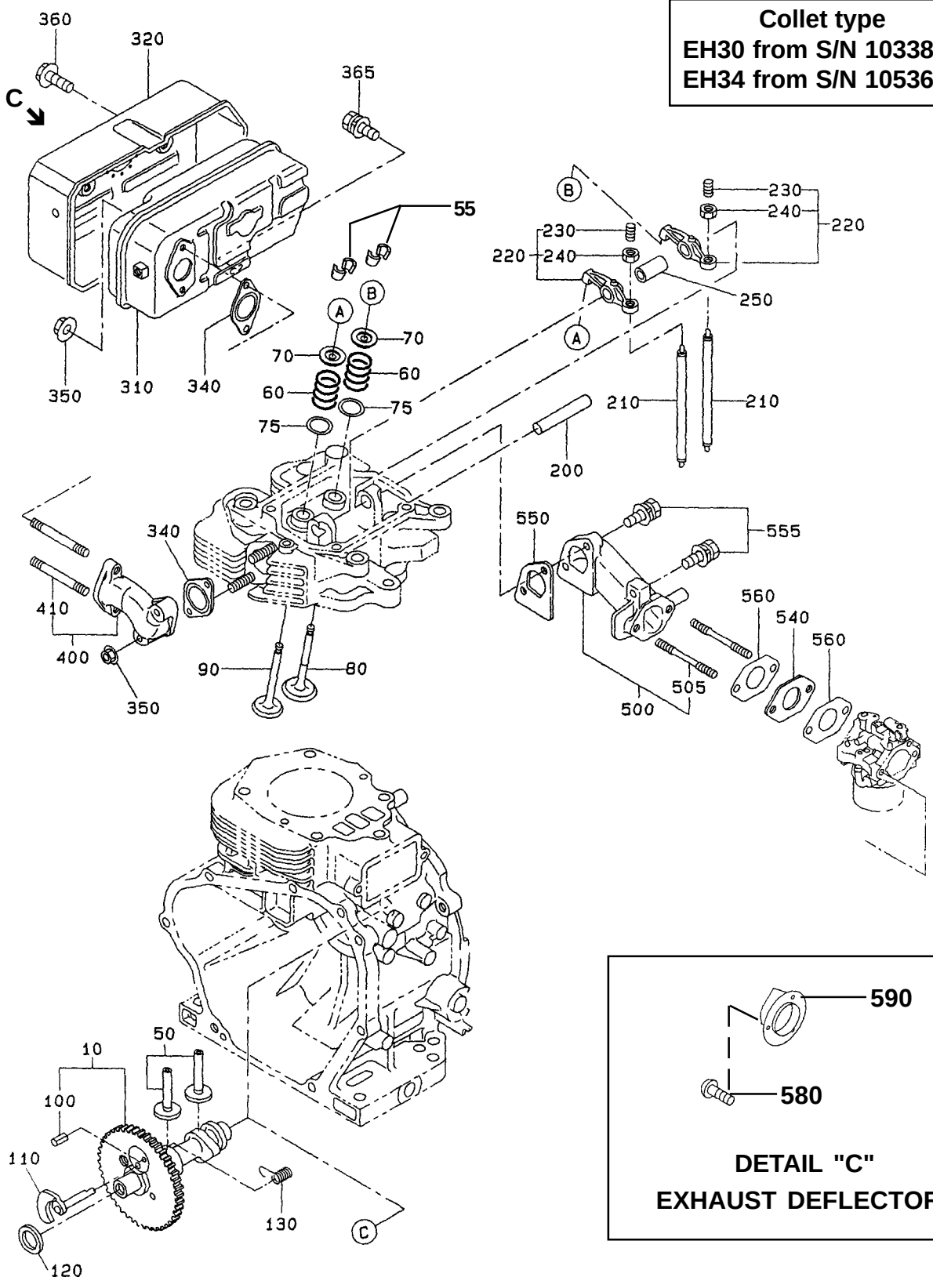

DETAIL "C"
EXHAUST DEFLECTOR

SECTION 3 INTAKE and EXHAUST GROUP

REF.	PART NO.	DESCRIPTION	QTY.	REMARKS	FROM-TO	FIG.
10	246-31701-01	CAMSHAFT	1			300
50	246-33301-03	TAPPET	2			300
55	246-33501-03	COLLET	2	EH30	from S/N 1033819	300
	246-33501-03	COLLET	2	EH34	from S/N 1053613	300
60	246-33611-03	VALVE SPRING	2	EH30	from S/N 1033819	300
	246-33611-03	VALVE SPRING	2	EH34	from S/N 1053613	300
70	246-33711-03	SPRING RETAINER	2	EH30	from S/N 1033819	300
	246-33711-03	SPRING RETAINER	2	EH34	from S/N 1053613	300
75	020-02000-10	WASHER	2			300
80	246-33411-03	INTAKE VALVE	1	EH30	from S/N 1033819	300
	246-33411-03	INTAKE VALVE	1	EH34	from S/N 1053613	300
90	246-33511-03	EXHAUST VALVE	1	EH30	from S/N 1033819	300
	246-33511-03	EXHAUST VALVE	1	EH34	from S/N 1053613	300
100	005-19041-00	SPRING PIN	1			300
110	246-36201-1	RELEASE LEVER	1			300
120	023-02200-50	SPACER T =0.6mm	1	Select 1 piece only		300
	023-02200-60	SPACER T=0.7mm	1	Select 1 piece only		300
	023-02200-70	SPACER T=0.8mm	1	Select 1 piece only		300
130	246-36701-03	RETURN SPRING	1			300
200	239-35001-03	ROCKER SHAFT	1			300
210	246-35301-11	PUSH ROD	2			300
220	246-36101-10	ROCKER ARM AY	2			300
230	014-90800-21	ADJUSTING SCREW	2			300
240	017-00800-90	NUT	2			300
250	246-36120-03	SPACER	1			300
310	246-30101-21	MUFFLER	1			300
320	246-34201-21	MUFFLER COVER	1			300
340	246-35201-03	GASKET, muffler	2			300
350	018-00800-10	FLANGE NUT	4			300
360	011-00600-10	FLANGE BOLT	3			300
365	001-11081-60	BOLT and WASHER AY	1			300
400	246-34001-01	EXHAUST PIPE	1			300
410	010-50803-60	STUD	2			300
500	246-33001-01	INTAKE PIPE	1			300
505	010-50602-30	STUD	2			300
540	246-32901-03	INSULATOR	1			300
550	246-36001-13	GASKET, intake pipe	1			300
555	001-13082-80	BOLT and WASHER AY	3			300
560	234-35902-03	GASKET 2, insulator	2			300
580	015-00400-60	TAPPING SCREW	3			300
590	246-37001-07	EXHAUST DEFLECTOR	1	Includes item 580		300

FIG. 310

OLD STYLE VALVE RETAINER

Non-Collet type
EH30 to S/N 1033818
EH34 to S/N 1053612

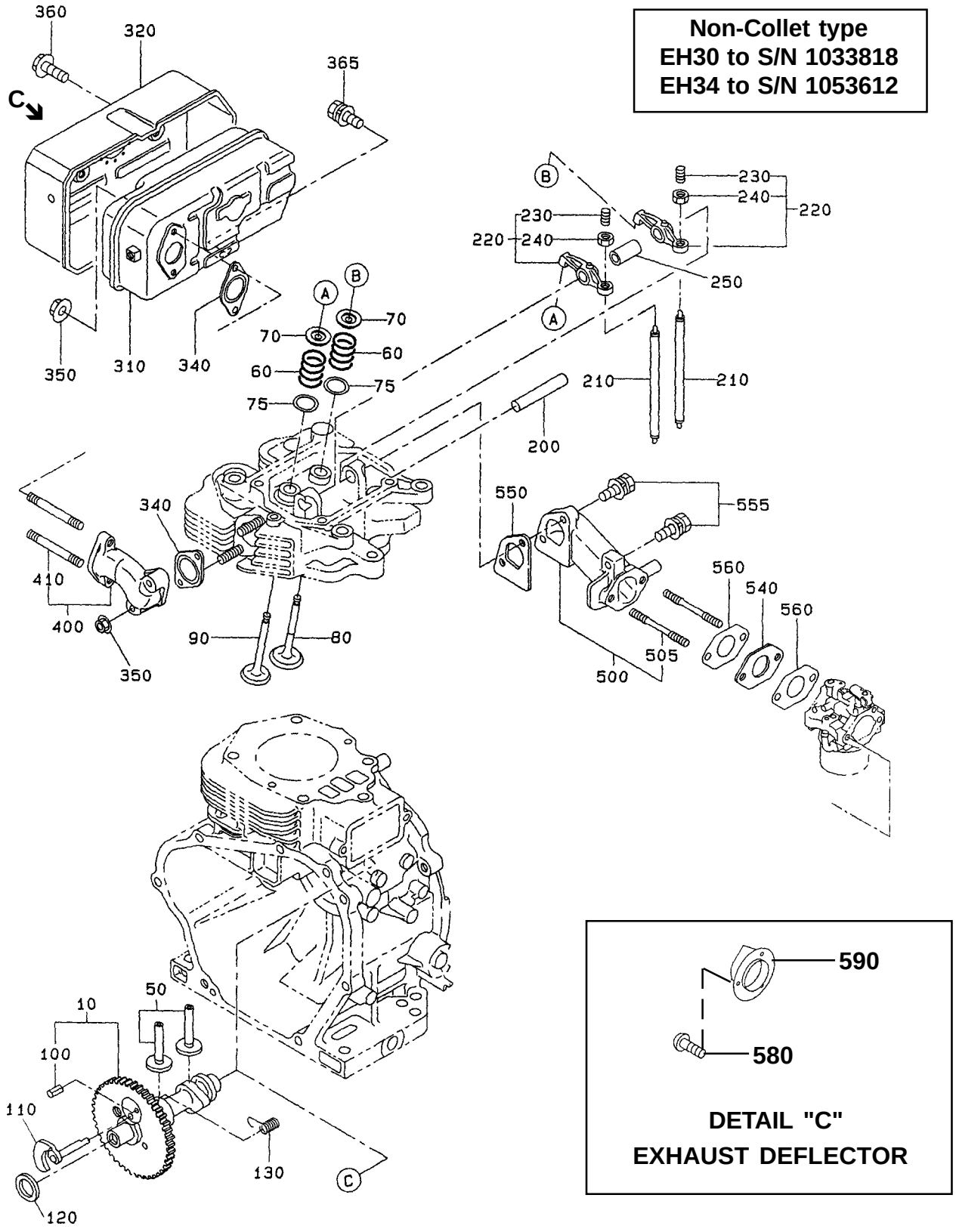

SECTION 3 INTAKE and EXHAUST GROUP

REF.	PART NO.	DESCRIPTION	QTY.	REMARKS	FROM-TO	FIG.
10	246-31701-01	CAMSHAFT	1			310
50	246-33301-03	TAPPET	1			310
60	246-33601-03	VALVE SPRING	2	EH30	To S/N 1033818	310
	246-33601-03	VALVE SPRING	2	EH34	To S/N 1053612	310
70	246-33701-03	SPRING RETAINER	2	EH30	To S/N 1033818	310
	246-33701-03	SPRING RETAINER	2	EH34	To S/N 1053612	310
75	020-02000-10	WASHER	2			310
80	246-33401-03	INTAKE VALVE	1	EH30	To S/N 1033818	310
	246-33401-03	INTAKE VALVE	1	EH34	To S/N 1053612	310
90	246-33501-03	EXHAUST VALVE	1	EH30	To S/N 1033818	310
	246-33501-03	EXHAUST VALVE	1	EH34	To S/N 1053612	310
100	005-19041-00	SPRING PIN	1			310
110	246-36201-11	RELEASE LEVER	1			310
120	023-02200-50	SPACER, T=0.6mm	1	Select 1 piece only		310
	023-02200-60	SPACER, T=0.7mm	1	Select 1 piece only		310
	023-02200-70	SPACER, T=0.7mm	1	Select 1 piece only		310
130	246-36701-03	RETURN SPRING	1			310
200	239-35001-03	ROCKER SHAFT	1			310
210	246-35301-11	PUSH ROD	2			310
220	246-36101-10	ROCKER ARM AY	2			310
230	014-90800-21	ADJUSTING SCREW	2			310
240	017-00800-90	NUT	2			310
250	246-36120-03	SPACER	1			310
310	246-30101-21	MUFFLER	1			310
320	246-34201-21	MUFFLER COVER	1			310
340	246-35201-03	GASKET, muffler	2			310
350	018-00800-10	FLANGE NUT	4			310
360	011-00600-10	FLANGE BOLT	3			310
365	001-11081-60	BOLT and WASHER AY	1			310
400	246-34001-01	EXHAUST PIPE	1			310
410	010-50803-60	STUD	2			310
500	246-33001-01	INTAKE PIPE	1			310
505	010-50602-30	STUD	2			310
540	246-32901-03	INSULATOR	1			310
550	246-36001-13	GASKET 2, intake pipe	2			310
555	001-13082-80	BOLT and WASHER AY	3			310
560	234-35902-03	GASKET 2, insulator	2			310
580	015-00400-60	TAPPING SCREW	3			310
590	246-37001-07	EXHAUST DEFLECTOR	1	Includes item 580		310

FIG. 320

STANDARD PREMIUM - TOP INLET CYCLONE

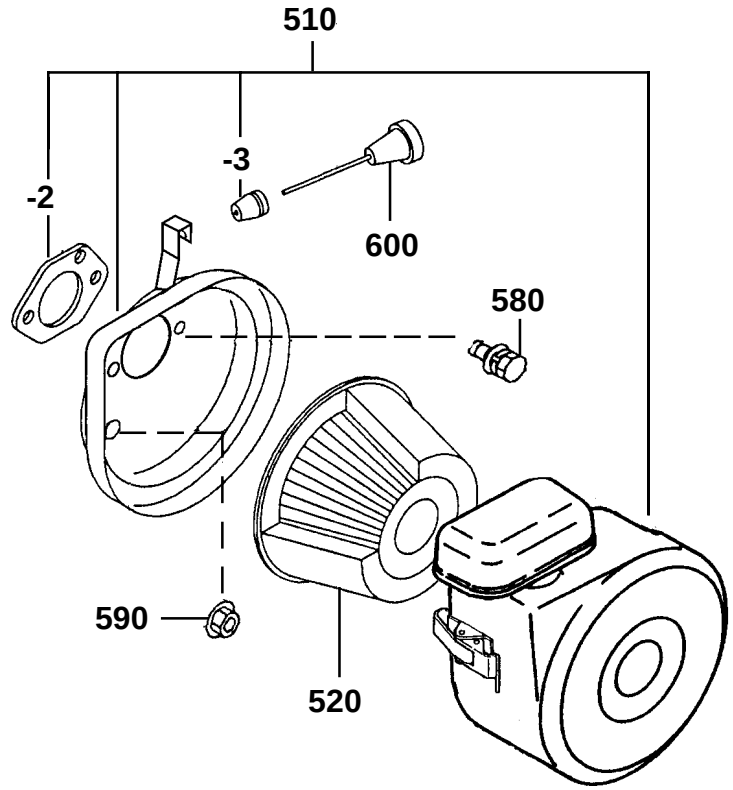

A

STANDARD - LOWER INLET CYCLONE

B

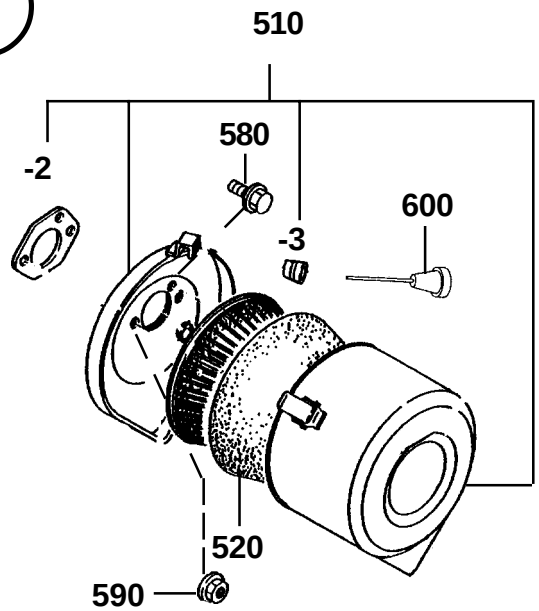

WISCONSIN ROBIN STANDARD 2-STAGE

C

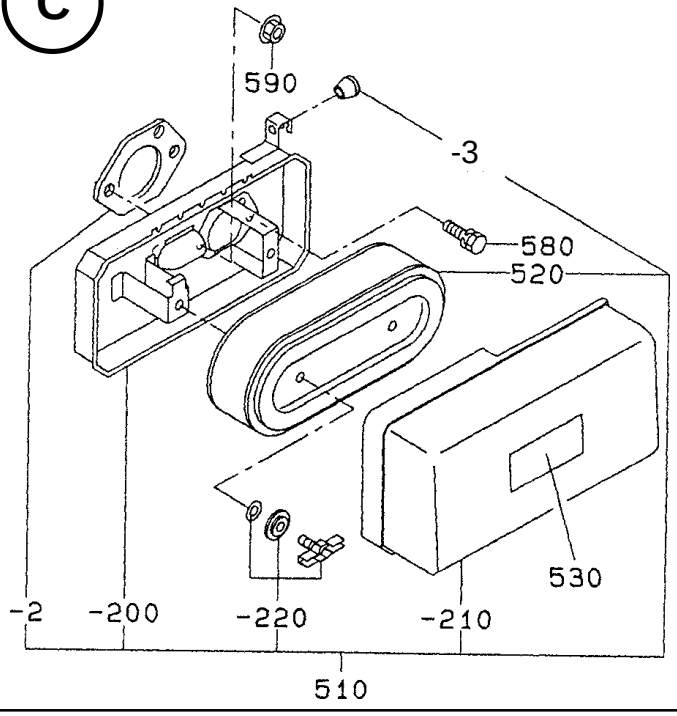

SECTION 3 INTAKE and EXHAUST GROUP

REF.	PART NO.	DESCRIPTION	QTY.	REMARKS	FROM-TO	FIG.
510	246-32610-00	AIR CLEANER AY	1	STANDARD PREMIUM		320A
	254-32612-10	AIR CLEANER AY	1	STANDARD		320B
	246-32602-00	AIR CLEANER AY	1	WISCONSIN ROBIN		320C
-2	234-36003-03	PACKING	1			320
-3	207-32690-08	GROMMET	1			320
-220	246-32653-08	WING BOLT	1			320C
520	234-32604-07	ELEMENT SET	1	STANDARD PREMIUM		320A
	234-32604-07	ELEMENT SET	1	STANDARD		320B
	246-32601-07	ELEMENT SET	1	WISCONSIN ROBIN		320C
580	001-10061-20	BOLT and WASHER	1			320
590	002-38060-00	FLANGE NUT	2			320
600	246-45006-01	KNOB	1	STANDARD PREMIUM		320A
	246-45006-01	KNOB	1	STANDARD		320B

FIG. 400

MANUAL WITH LOWER CABLE CONTROL

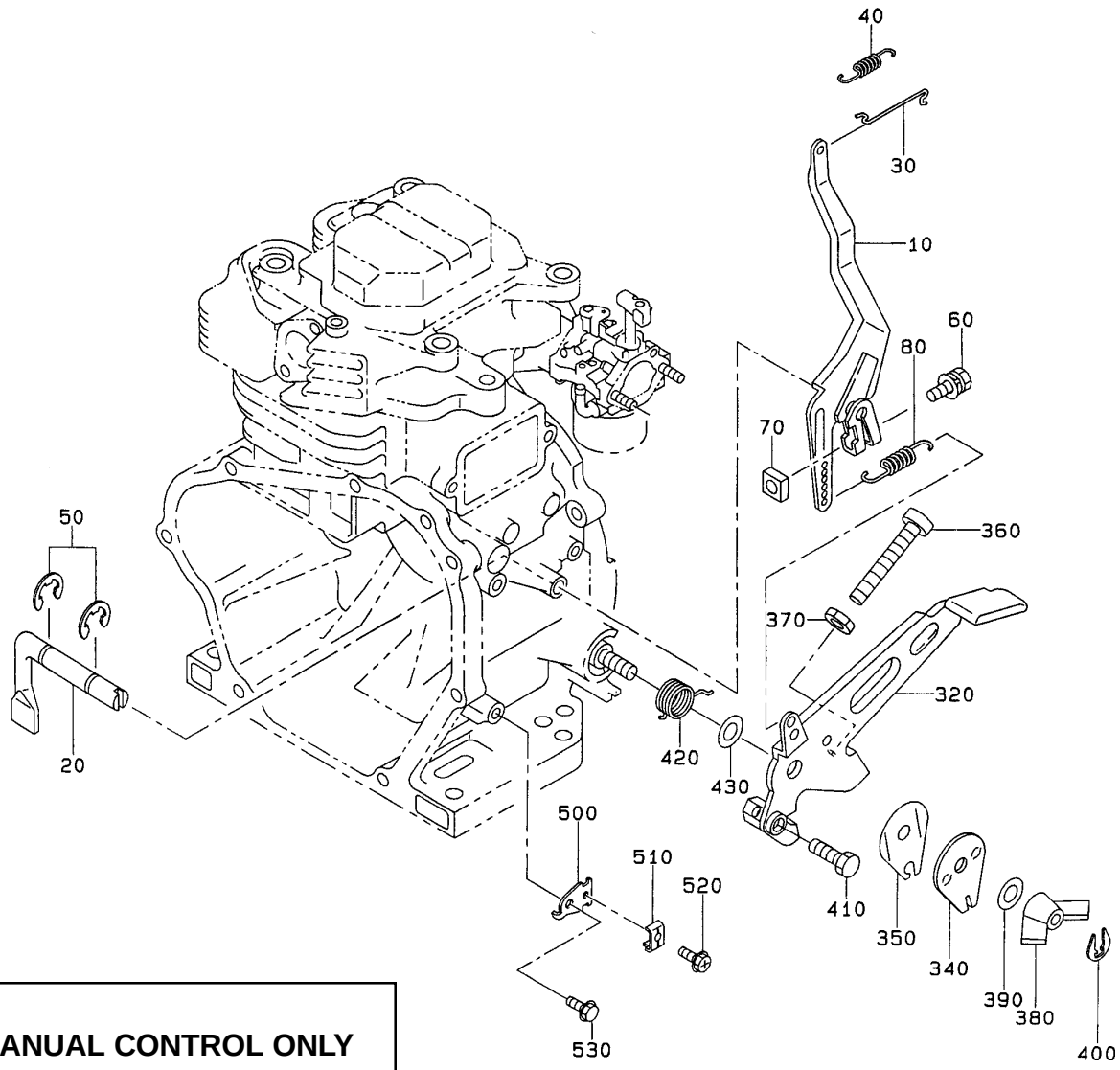

MANUAL CONTROL ONLY

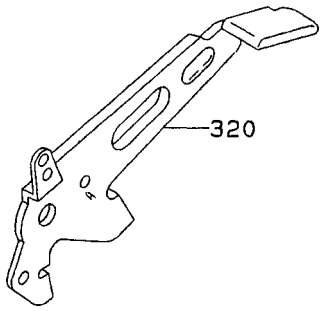

SECTION 4 GOVERNOR GROUP

REF.	PART NO.	DESCRIPTION	QTY.	REMARKS	FROM-TO	FIG.
10	246-42301-11	GOVERNOR LEVER, compl.	1			400
20	246-42201-23	GOVERNOR SHAFT	1			400
30	234-42701-01	GOVERNOR ROD	1			400
40	246-42801-13	ROD SPRING	1			400
50	003-13060-00	CLIP	2			400
60	001-14062-50	BOLT and WASHER, AY	1			400
70	018-60600-20	NUT	1			400
80	246-42501-23	GOVERNOR SPRING	1			400
320	246-43302-11	SPEED CONTROL, compl.	1	STD		400
	246-43303-11	SPEED CONTROL, compl.	1	lower cable control only		400
340	239-43501-01	STOP PLATE	1			400
350	239-45002-03	SPRING WASHER	1			400
360	004-31053-50	SCREW, panhead	1			400
370	002-27050-00	NUT	1			400
380	017-90800-12	WING NUT	1			400
390	003-10080-00	WASHER	1			400
400	056-50400-10	CLIP	1			400
410	011-60400-10	BOLT	1	lower cable control only		400
420	246-45201-23	RETURN SPRING	1	lower cable control only		400
430	021-70800-10	FRICTION WASHER	1			400
500	246-44201-13	WIRE BRACKET	1	lower cable control only		400
510	235-43901-01	CLAMP	1	lower cable control only		400
520	004-36051-60	SCREW and WASHER, AY	1	lower cable control only		400
530	011-00600-10	FLANGE BOLT	1	lower cable control only		400

FIG. 500

NEW STYLE RECOIL

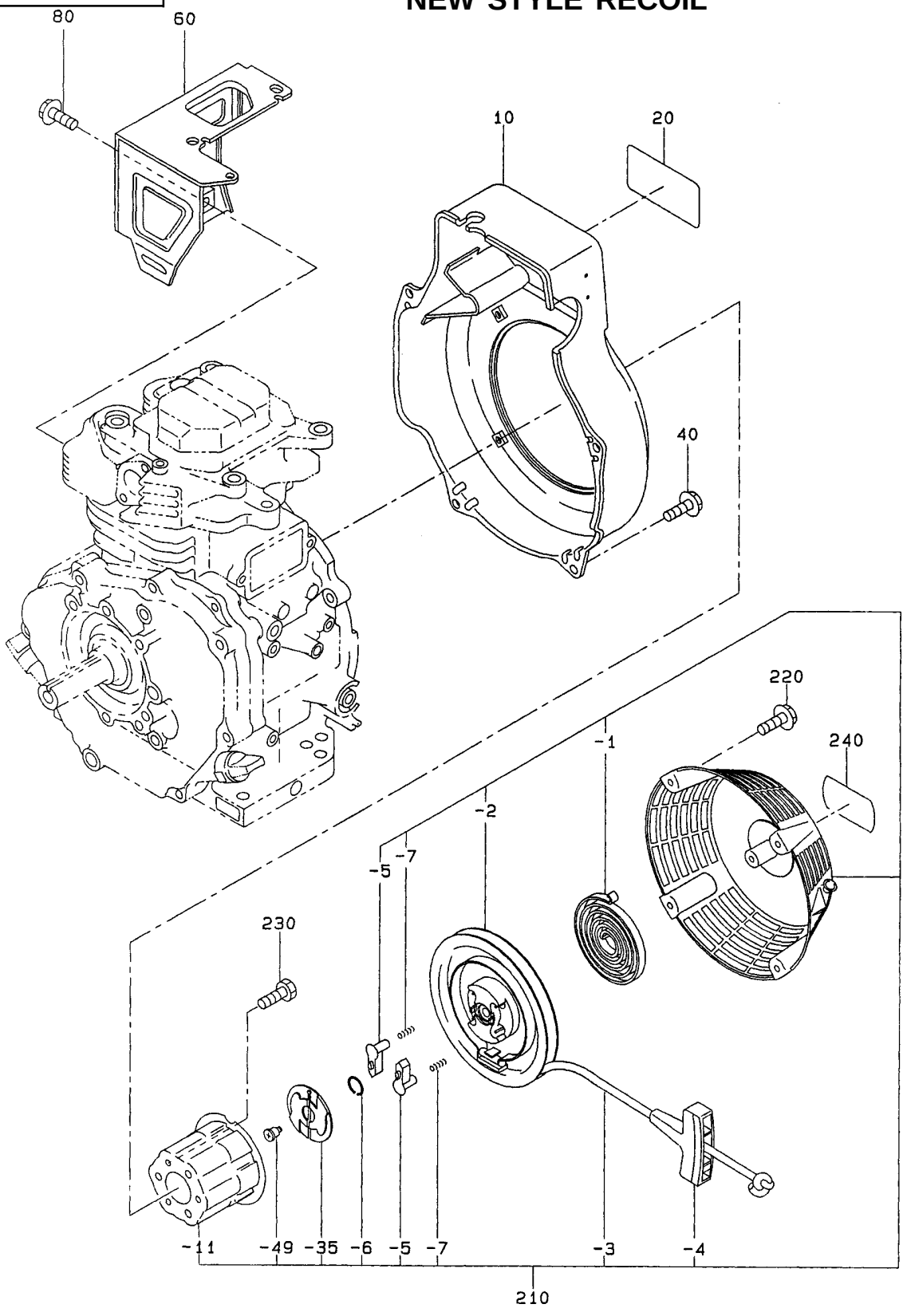

SECTION 5 COOLING and STARTING GROUP

REF.	PART NO.	DESCRIPTION	QTY.	REMARKS	FROM-TO	FIG.
10	246-51205-11	BLOWER HOUSING	1			500
20	246-91705-03	LABEL, trade mark	1	EH30		500
	247-91705-03	LABEL, trade mark	1	EH34		500
40	011-00600-10	FLANGE BOLT	4			500
60	246-52701-11	CYLINDER BAFFLE	1			500
80	011-00600-10	FLANGE BOLT	1			500
210	246-50201-20	RECOIL STARTER AY, compl.	1			500
-1	246-50115-08	SPIRAL SPRING	1			500
-2	246-50120-08	REEL	1			500
-3	235-50110-08	STARTER ROPE	1			500
-4	236-50101-08	STARTER KNOB	1			500
-5	246-50125-08	RATCHET	2			500
-6	246-50130-08	FRICTION SPRING	1			500
-7	227-50135-08	RETURN SPRING	2			500
-11	246-50147-08	STARTER PULLEY	1			500
-35	246-50160-08	RATCHET GUIDE	1			500
-49	227-50152-08	SET SCREW	1			500
220	011-00600-10	FLANGE BOLT	4			500
230	001-65081-20	BOLT	3			500
240	073-20049-50	LABEL, OHV mark	1			500

FIG. 510

OLD STYLE RECOIL

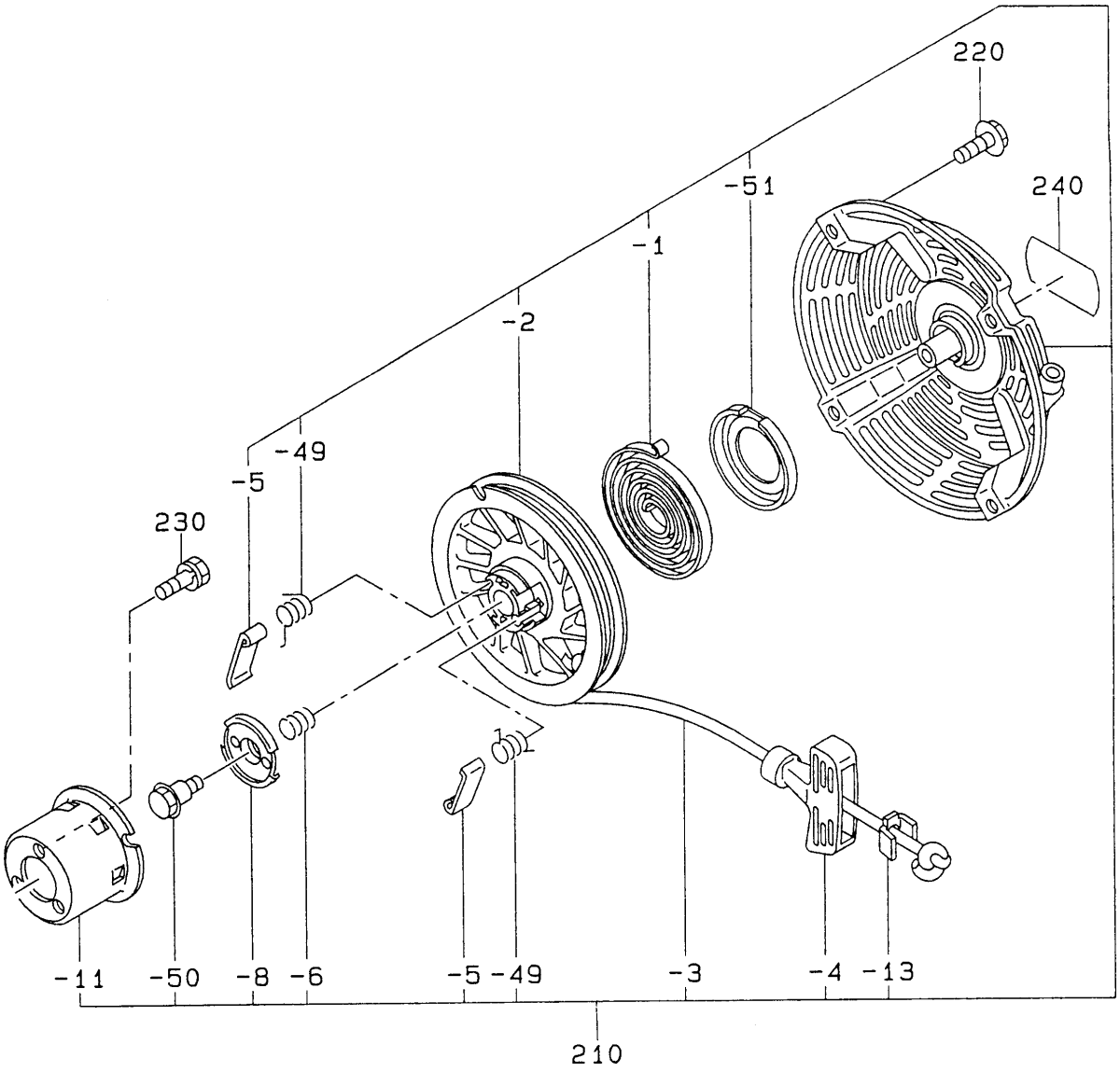

SECTION 5 COOLING and STARTING GROUP

REF.	PART NO.	DESCRIPTION	QTY.	REMARKS	FROM-TO	FIG.
210	246-50101-10	RECOIL STARTER AY	1	Obsolete, use 246-50201-20		510
-1	226-50715-08	SPIRAL SPRING	1			510
-2	246-50720-18	REEL	1			510
-3	246-50705-08	STARTER ROPE	1			510
-4	246-50700-08	STARTER KNOB	1			510
-5	246-50725-08	RATCHET	2			510
-6	226-50730-08	FRICTION SPRING	1			510
-8	246-50740-08	FRICTION PLATE	1			510
-11	246-50745-08	STARTER PULLY	1			510
-13	226-50750-08	KNOB CAP	1			510
-49	226-50752-08	RATCHET SPRING	2			510
-50	226-50751-08	CENTER SCREW	1			510
-51	246-50760-08	SPRING KEEPER	1			510
220	011-00600-10	FLANGE BOLT	4			510
230	001-10061-40	BOLT and WASHER	3			510
240	073-20049-50	LABEL, OHV	1			510

FIG. 600

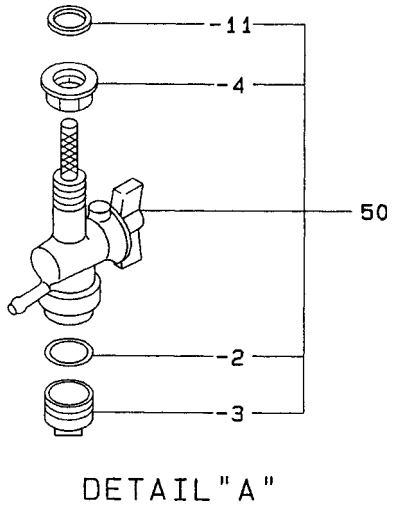

DETAIL"A"

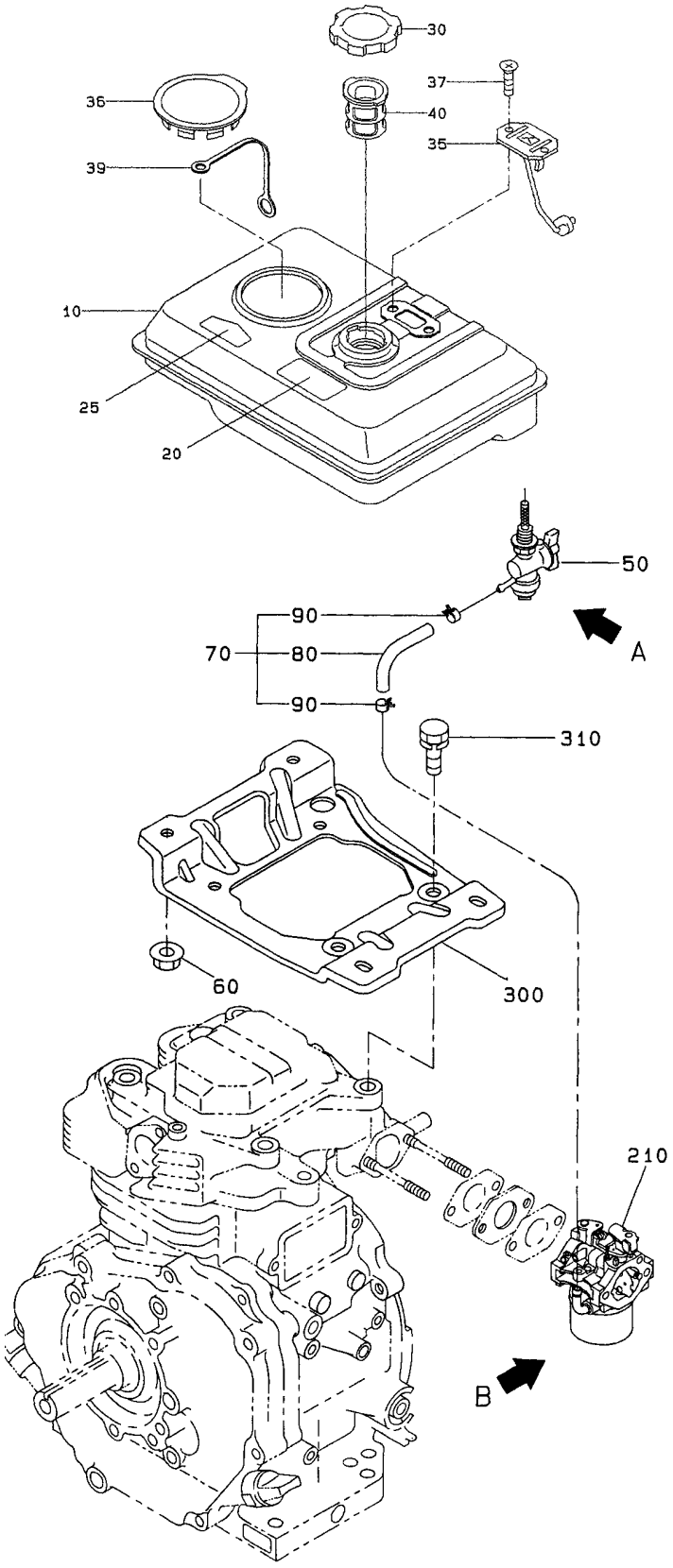

SECTION 6 FUEL, LUBRICANT GROUP

REF.	PART NO.	DESCRIPTION	QTY.	REMARKS	FROM-TO	FIG.
10	246-60106-11	FUEL TANK	1	Black		600
	246-60102-27	FUEL TANK	1	Primer		600
20	073-20041-60	LABEL, caution	1			600
25	073-20039-00	LABEL, warning	1			600
30	043-04300-15	FUEL TANK CAP	1			600
35	064-80001-00	FUEL GAUGE	1			600
36	246-66001-03	PLUG COVER	1			600
37	014-50500-40	SCREW, counter head	2			600
39	246-66002-03	JOINT	1			600
40	064-13600-10	FUEL FILTER	1			600
50	246-62101-20	FUEL STRAINER	1			600
-2	064-20064-10	PACKING	1			600
-3	064-20042-10	CUP	1			600
-4	064-20064-30	NUT	1			600
-11	064-20064-40	PACKING	1			600
60	002-38080-00	FLANGE NUT	4			600
70	224-62611-01	FUEL PIPE II, compl.	1			600
80	085-10600-00	RUBBER PIPE	1	Ø 6 X Ø 12 X 100mm		600
90	056-11100-10	HOSE CLAMP	2			600
300	246-61601-21	FUEL TANK BRACKET	1			600
310	001-13102-00	BOLT and WASHER	4			600

FIG. 610

DETAIL "B"

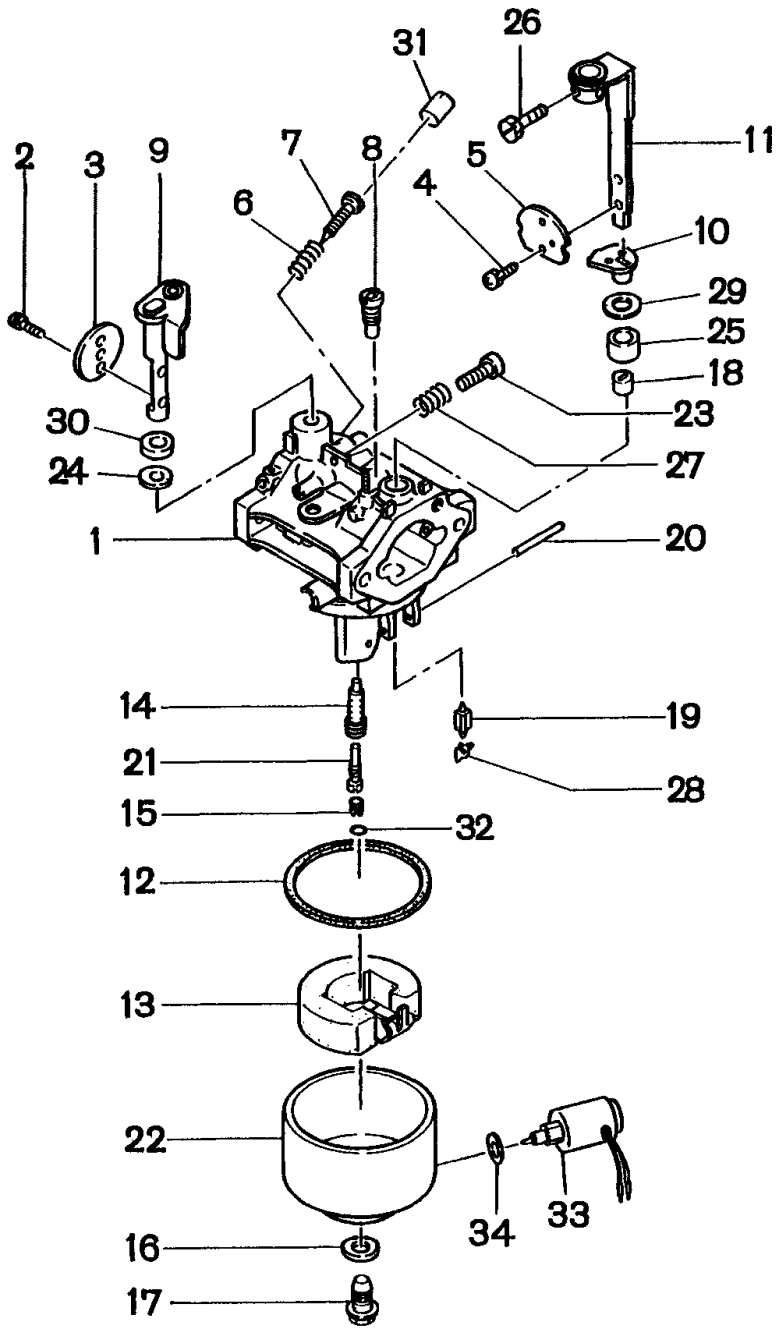

SECTION 6 FUEL, LUBRICANT GROUP

REF.	PART NO.	DESCRIPTION	QTY.	REMARKS	FROM-TO	FIG.
210	246-62314-00	CARBURETOR	1	EH30		610
	247-62327-00	CARBURETOR	1	EH34		610
	247-62325-10	CARBURETOR	1	RGV6101, right side inlet		610
-2	209-62351-08	SCREW	2			610
-3	213-62535-08	THROTTLE VALVE	1			610
-4	237-62451-08	SCREW	2			610
-5	234-62525-08	CHOKE VALVE	1			610
-6	246-62436-08	SPRING	1			610
-7	209-62305-08	PILOT SCREW	1	EH30		610
	246-62436-08	PILOT SCREW	1	EH34		610
	246-62436-08	PILOT SCREW	1	RGV6101		610
-8	246-62420-08	PILOT JET	1	EH30		610
	247-62420-08	PILOT JET	1	EH34		610
	247-62420-08	PILOT JET	1	RGV6101		610
-9	246-62531-08	THROTLE SHAFT	1			610
-10	239-62560-08	RING, choke	1			610
-11	246-62522-08	CHOKE LEVER	1			610
-12	206-62540-08	CHAMBER PACKING	1			610
-13	234-62506-08	FLOAT AY	1			610
-14	246-62440-08	MAIN NOZZLE	1	EH30		610
	246-62441-08	MAIN NOZZLE	1	EH34		610
	246-62441-08	MAIN NOZZLE	1	RGV6101		610
-15	246-62402-08	MAIN JET	1	EH30		610
	234-62404-08	MAIN JET	1	EH34		610
	246-62403-08	MAIN JET	1	RGV6101		610
-16	207-62345-08	INSERT WASHER	1			610
-17	224-62544-08	BOLT	1			610
-18	226-62550-08	RING	1			610
-19	224-62312-08	NEEDLE VALVE	1			610
-20	214-62515-08	PIN	1			610
-21	246-62425-08	GUIDE HOLDER	1			610
-22	224-62552-08	FLOAT CHAMBER BODY	1	STD		610
	247-62556-08	FLOAT CHAMBER BODY	1	RGV6101		610
-23	246-62435-08	ADJUSTING SCREW	1			610
-24	106-62392-08	SEAL	1			610
-25	247-62550-08	CAP, choke	1			610
-26	227-62450-08	BOLT	1			610
-27	209-62445-08	SPRING, adjusting	1			610
-28	224-62569-08	CLIP	1			610
-29	236-62680-08	SEAL	1			610
-30	156-62351-08	PACKING	1			610
-32	242-62313-08	"O" RING	1	RGV6101 ONLY		610
-33	247-62561-08	SOLENOID AY	1	RGV6101 ONLY		610
-34	247-62565-08	WASHER	1	RGV6101 ONLY		610

FIG. 700

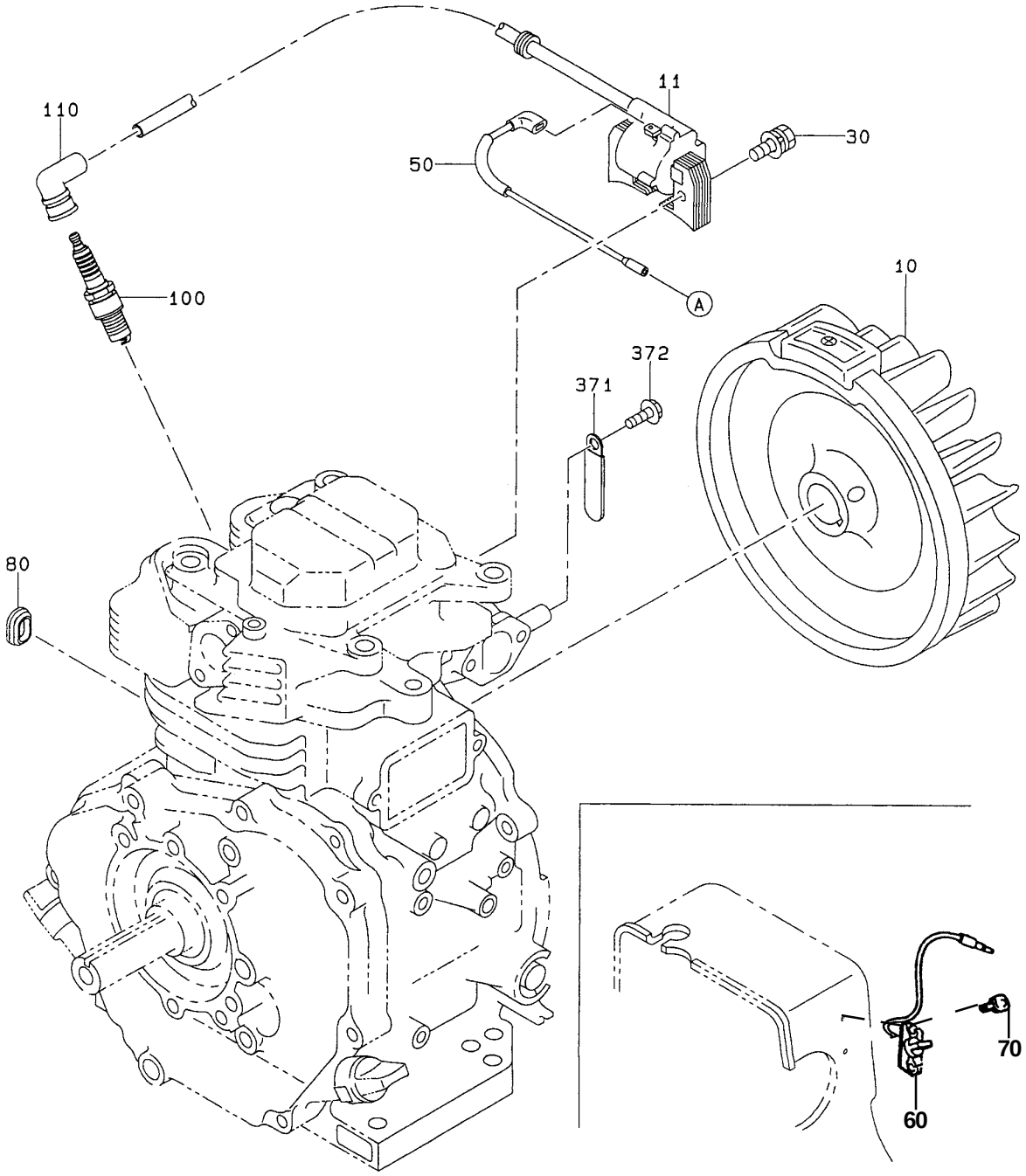

SECTION 7A ELECTRIC DEVICE GROUP - RECOIL START

REF.	PART NO.	DESCRIPTION	QTY.	REMARKS	FROM-TO	FIG.
10	246-77202-01	FLYWHEEL	1			700
11	246-78201-21	IGNITION COIL	1			700
30	001-14063-00	BOLT and WASHER, AY	2			700
50	246-73101-01	WIRE 1, compl.	1			700
60	066-00003-61	STOP SWITCH	1			700
70	015-00400-10	TAPPING SCREW	2			700
80	227-75001-03	GROMMET	1			700
100	065-01401-00	SPARK PLUG	1			700
110	065-50000-51	SPARK PLUG CAP	1			700
371	056-60002-50	CLAMP	1			700
372	011-00600-10	FLANGE BOLT	1			700

FIG. 710

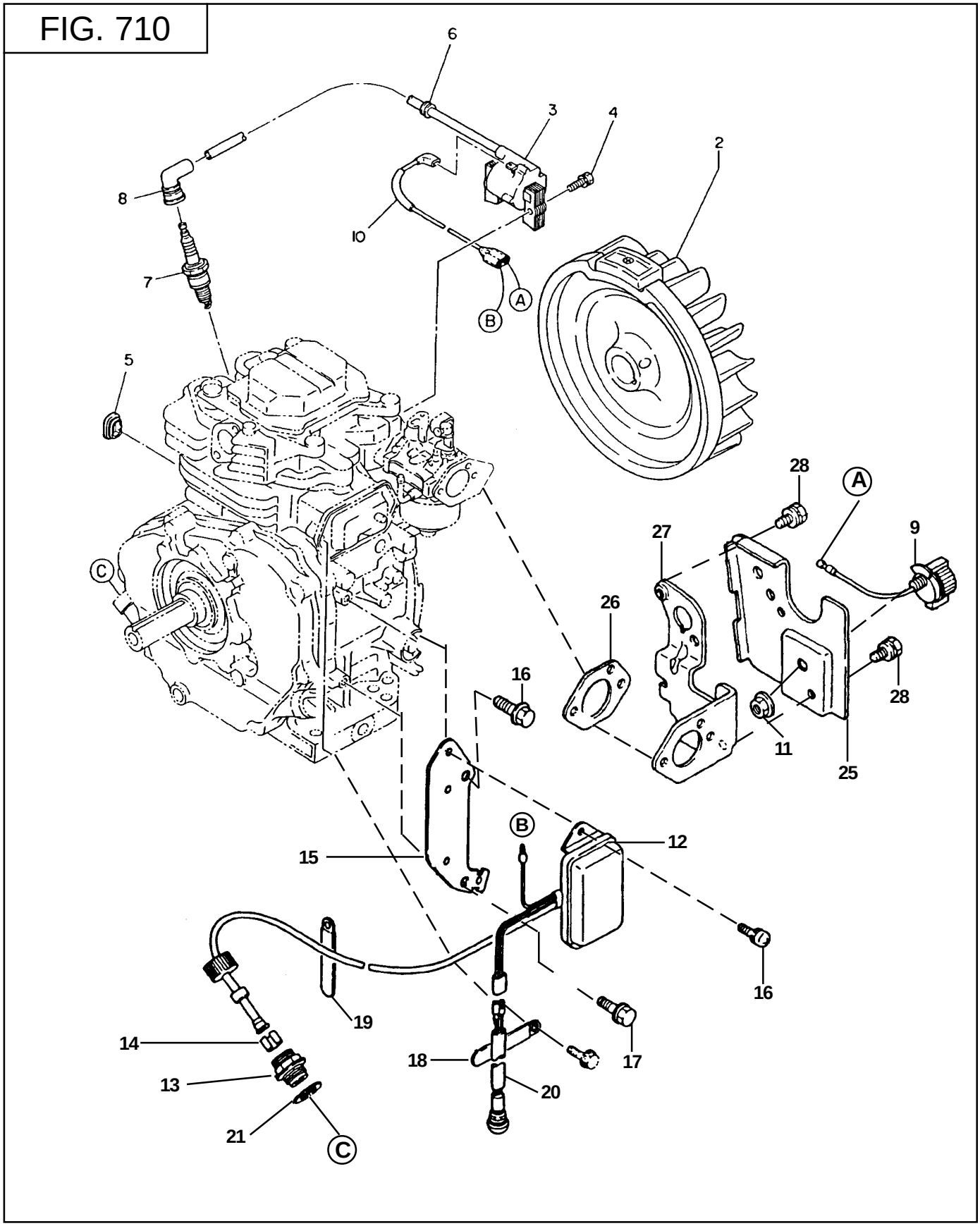
6
3
4
2
8
10
7
A
B
5
28
A
27
9
C
26
16
28
11
25
B
12
15
16
19
14
18
17
13
20
21
C

SECTION 7B RECOIL START - WISCONSIN ROBIN

REF.	PART NO.	DESCRIPTION	QTY.	REMARKS	FROM-TO	FIG.
2	246-77202-07	FLYWHEEL	1			710
3	246-78201-21	IGNITION COIL	1			710
4	001-14063-00	BOLT and WASHER AY	2			710
5	226-75501-03	GROMMET	1			710
6	024-10700-20	GROMMET	1			710
7	065-01403-00	SPARK PLUG	1			710
8	065-50000-51	SPARK PLUG CAP	1			710
9	066-00002-80	SWITCH AY	1			710
10	246-73103-01	WIRE COIL, to switch	1			710
11	002-38080-00	FLANGE NUT	1			710
12	227-76015-01	OIL LEVEL SENSOR	1	**Obsolete, use KS3-11020-01		710
13	246-76201-03	JOINT	1			710
14	246-76202-03	SPACER, joint	1			710
15	246-76003-01	BRACKET, sensor	1			710
16	004-36061-00	SCREW and WASHER AY	2			710
17	011-00600-10	FLANGE BOLT	2			710
18	056-60002-50	CLAMP	1			710
19	056-60002-60	CLAMP	2			710
20	246-77302-00	LED LAMP, AY	1			710
21	021-32000-10	GASKET	1			710
25	246-40102-11	CONTROL PANEL	1			710
26	234-36003-03	GASKET, air cleaner	1			710
27	246-40201-11	BRACKET, panel	1			710
28	001-16051-00	BOLT and WASHER AY	2			710
		** See figure 780				
		for new sensor				

FIG. 720

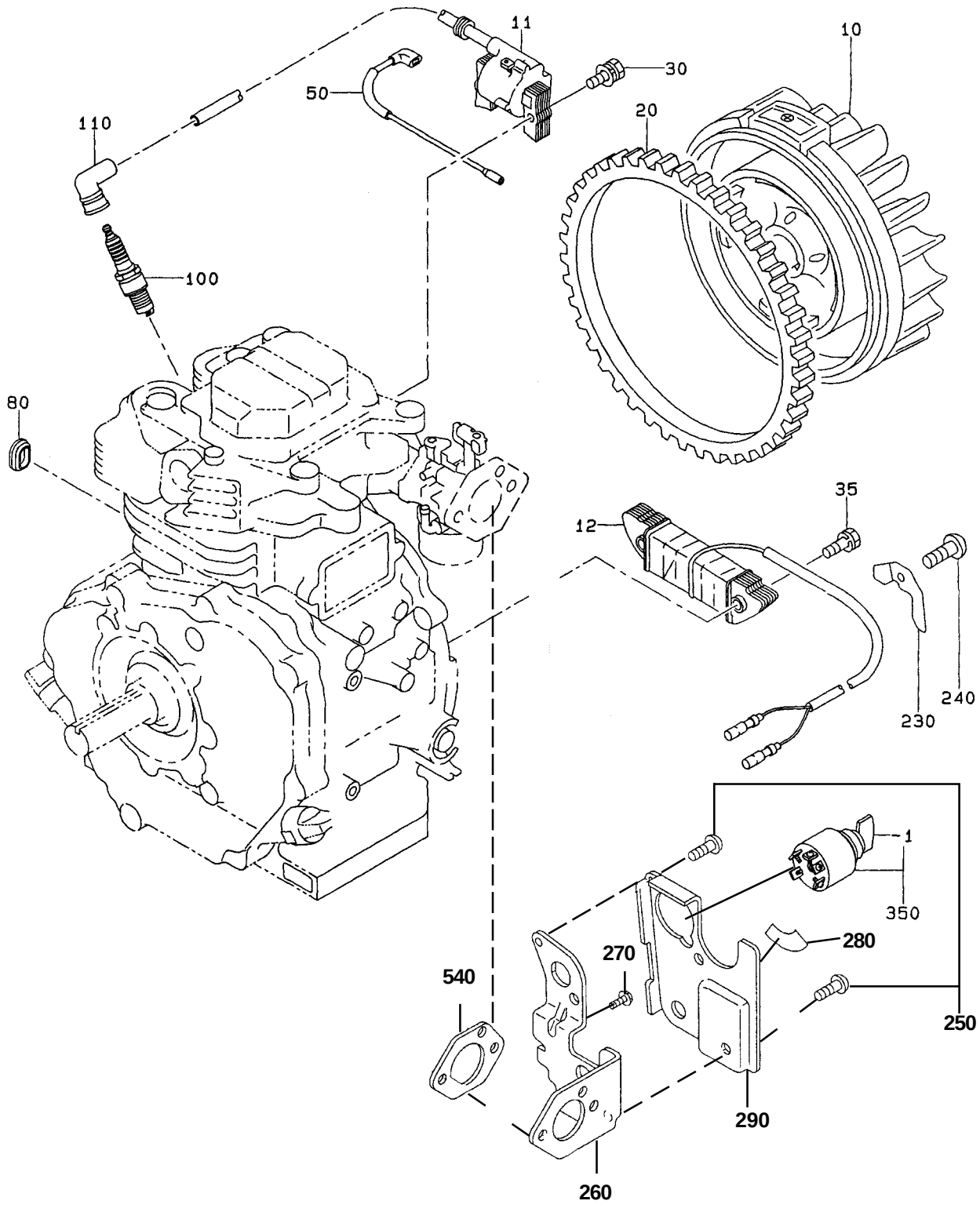
11
10
30
50
20
110
100
80
35
12
240
230
1
350
280
270
540
250
290
260

SECTION 7C ELECTRIC DEVICE GROUP - ELECTRIC START

REF.	PART NO.	DESCRIPTION	QTY.	REMARKS	FROM-TO	FIG.
10	246-77204-01	FLYWHEEL	1			720
11	246-78201-21	IGNITION COIL	1			720
12	246-79201-01	CHARGE COIL	1			720
20	246-71002-03	RING GEAR	1			720
30	001-14063-00	BOLT and WASHER AY	2			720
35	004-35062-00	SCREW and WASHER AY	2			720
50	246-73101-01	WIRE 1, compl.	1			720
80	226-75501-03	GROMMET	1			720
100	065-01401-00	SPARK PLUG	1			720
110	065-50000-51	SPARK PLUG CAP	1			720
230	246-75502-01	CLAMP, compl.	1			720
240	004-31060-80	PANHEAD SCREW	1			720
250	015-00400-60	TAPPING SCREW	2			720
260	246-40301-11	PANEL BRACKET	1			720
270	011-00600-10	FLANGE BOLT	1			720
280	073-20044-70	LABEL, starter switch	1			720
290	246-40301-11	CONTROL PANEL	1			720
350	066-00003-30	SWITCH	1	Includes item -1		720
-1	066-00099-80	KEY	1			720
540	234-36003-03	GASKET	1			720

FIG. 730

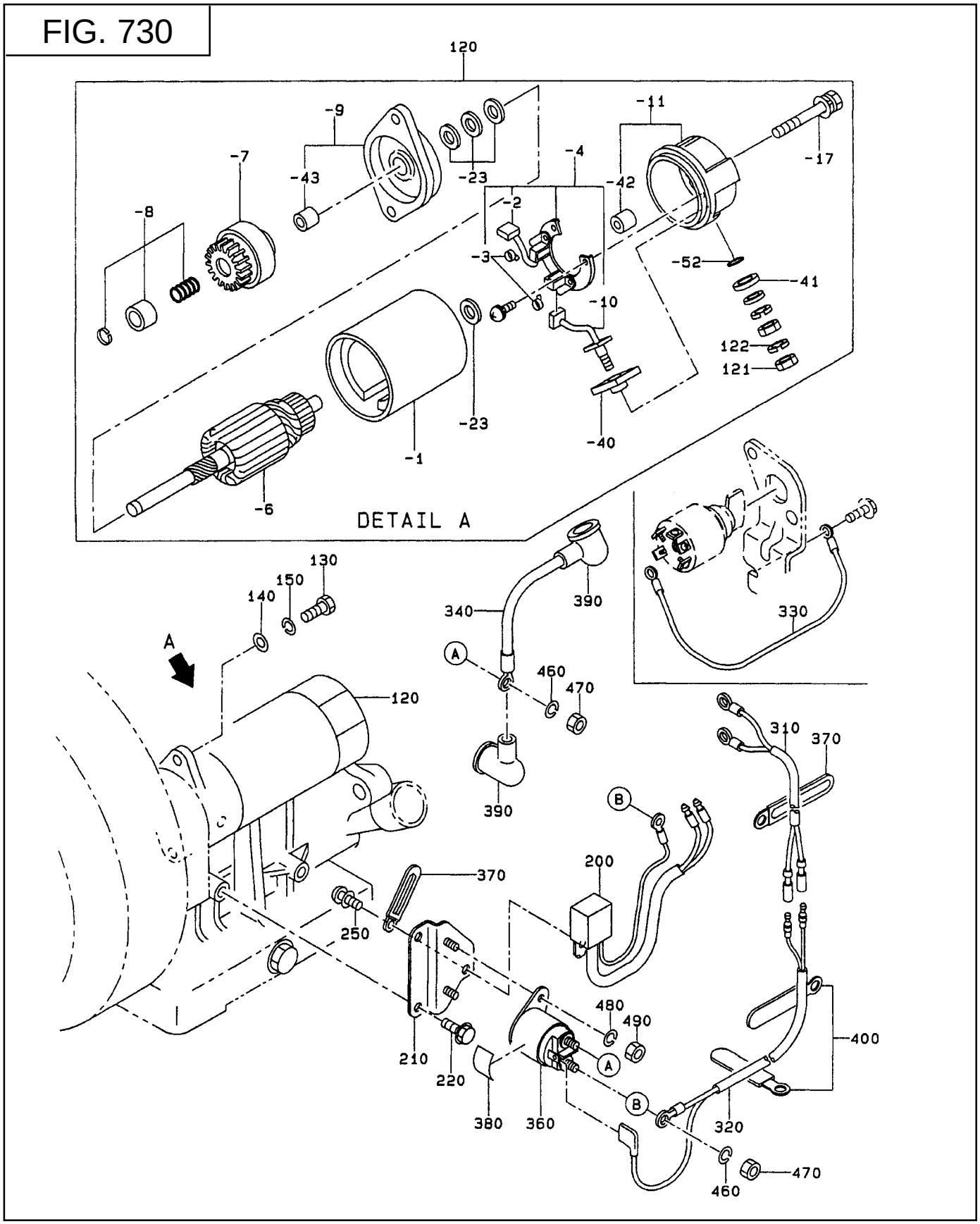
120
-9
-11
-7
-43
-23
-4
-42
-17
-8
-2
-3
-52
-41
-10
122
121
-23
-1
-40
-6
DETAIL A
130
150
140
340
390
330
A
460
470
120
310
370
390
B
200
370
250
480
490
400
210
220
380
360
320
460
470

SECTION 7D ELECTRIC DEVICE GROUP - ELECTRIC STARTER

REF.	PART NO.	DESCRIPTION	QTY.	REMARKS	FROM-TO	FIG.
120	246-70501-00	STARTING MOTOR	1	Includes items -1 thru -52		730
-1	235-70560-08	YOKE, AY	1			730
-2	235-70535-08	BRUSH (+)	1			730
-3	235-70545-08	SPRING BRUSH	2			730
-4	235-70530-08	BRUSH HOLDER, AY	1			730
-6	235-70550-08	ARMATURE, AY	1			730
-7	246-70521-08	PINION, AY	1			730
-8	246-70571-08	STOPPER SET	1			730
-9	246-70500-08	FRONT COVER, AY	1			730
-10	235-70540-08	BRUSH (-)	1			730
-11	246-70505-08	REAR COVER, AY	1			730
-17	235-70575-08	THROUGH BOLT, AY	2			730
-23	235-70555-08	WASHER KIT	1			730
-40	235-70565-08	M BUSH (1)	1			730
-41	235-70566-08	M BUSH (2)	1			730
-43	214-70560-08	FRONT METAL	1			730
-52	246-70580-08	O RING	1			730
121	002-27060-00	NUT	1			730
122	003-20060-00	SPRING WASHER	1			730
130	214-79007-01	BOLT, starter	2			730
140	003-10080-00	WASHER	2			730
150	003-20080-00	SPRING WASHER	2			730
200	232-71401-01	DIODE RECTIFIER, compl.	1		From S/N 1029603	730
	246-71401-01	DIODE RECTIFIER, compl.	1		To S/N 1029602	730
210	246-76009-01	BRACKET, magnetic switch	1		From S/N 1029603	730
	246-76001-01	BRACKET, magnetic switch	1		To S/N 1029602	730
220	011-00600-10	FLANGE BOLT	2			730
250	004-35061-00	SCREW and WASHER AY	1			730
310	246-73104-01	WIRE 4, compl.	1			730
320	246-73105-21	WIRE 5, compl.	1			730
330	227-73102-01	WIRE 2, compl.	1			730
340	214-73101-11	WIRE 1, compl.	1			730
360	066-10000-10	MAGNETIC SWITCH	1		From S/N 1029603	730
	246-77301-00	MAGNETIC SWITCH	1		To S/N 1029602	730
370	056-60002-50	CLAMP	2			730
380	073-20044-80	LABEL, battery	1			730
390	214-78501-03	WIRE CASING	2			730
400	056-60002-60	CLAMP	2			730
460	003-20060-00	SPRING WASHER	2			730
470	002-27060-00	NUT	2			730
480	003-20050-00	SPRING WASHER	2			730
490	002-17050-00	NUT	2			730

FIG. 740

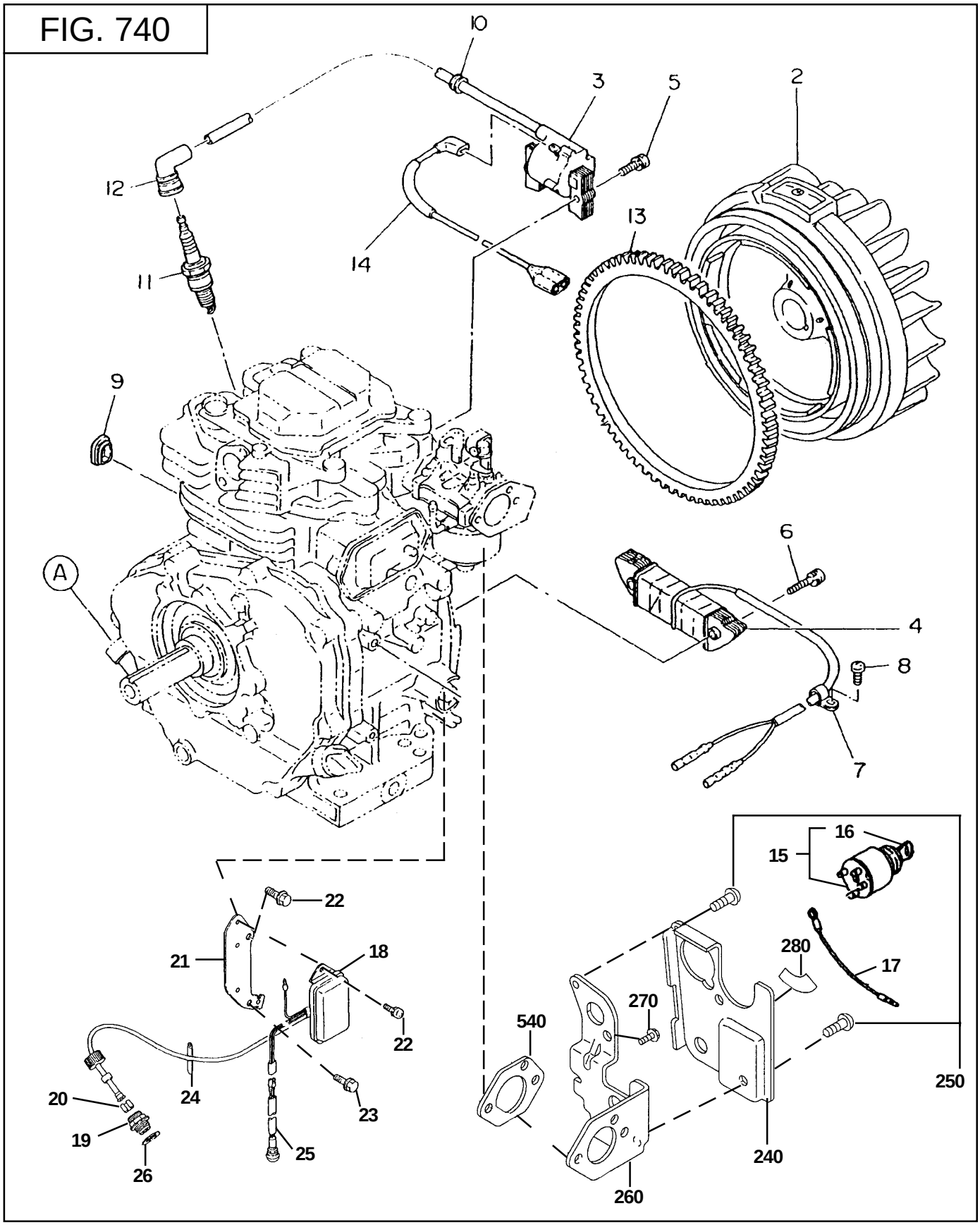
10
3
5
2
12
13
14
11
9
A
6
4
8
7
16
15
280
17
270
540
250
240
260
22
21
18
22
20
24
23
19
25
26

SECTION 7E ELECTRIC START - WISCONSIN ROBIN

REF.	PART NO.	DESCRIPTION	QTY.	REMARKS	FROM-TO	FIG.
2	246-77203-11	FLYWHEEL	1			740
3	246-78201-21	IGNITION COIL	1			740
4	246-79201-01	LAMP COIL	1			740
5	001-14063-00	BOLT and WASHER, AY	2			740
6	004-31060-80	SCREW and WASHER, AY	2			740
7	206-75501-01	CLAMP	1			740
8	004-31060-80	SCREW, panhead	1			740
9	226-75501-03	GROMMET	1			740
10	024-10800-10	GROMMET	1			740
11	065-01403-00	SPARK PLUG	1			740
12	065-50000-51	PARK PLUG CAP	1			740
13	246-71002-03	RING GEAR	1			740
14	246-73103-01	WIRE 3	1			740
15	066-00001-11	SWITCH	1			740
16	066-00099-90	KEY	1	Includes item 16		740
17	224-73102-01	WIRE 3	1			740
18	227-76015-01	OIL LEVEL SENSOR	1	**Obsolete, use KS3-11020-01		740
19	246-76201-03	JOINT	1			740
20	246-76202-03	SPACER, joint	1			740
21	246-76003-01	BRACKET, sensor	1			740
22	004-36061-00	SCREW and WASHER, AY	2			740
23	011-00600-10	FLANGE BOLT	1			740
24	056-60002-60	CLAMP	1			740
25	246-77302-00	LED LAMP, AY	1			740
26	021-32000-10	GASKET	1			740
240	246-40306-11	CONTROL PANEL	1			740
250	015-00400-80	TAPPING SCREW	2			740
260	246-40301-11	PANEL BRACKET	1			740
270	011-00600-10	FLANGE BOLT	1			740
280	073-20039-70	LABEL, starter switch	1			740
540	234-36003-03	GASKET	1			740
		** See figure 780				
		for new sensor				

FIG. 750

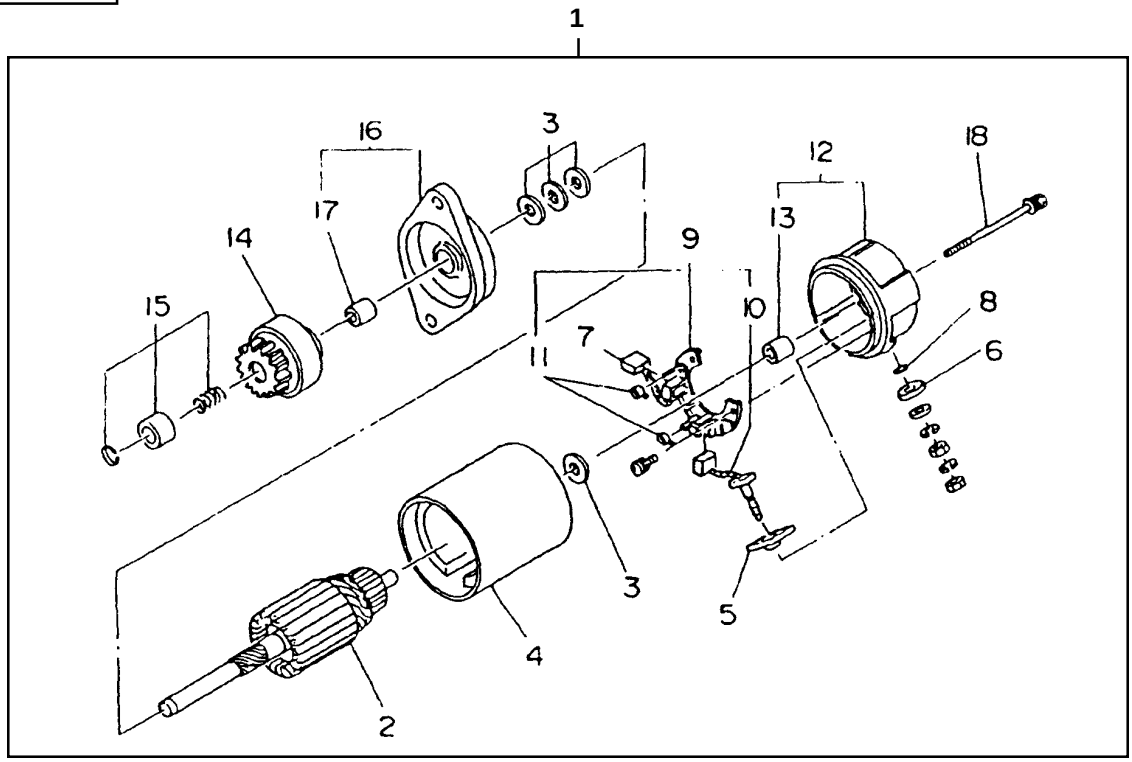
1
16
3
12
18
17
13
14
9
15
10
8
7
11
6
3
5
4
2

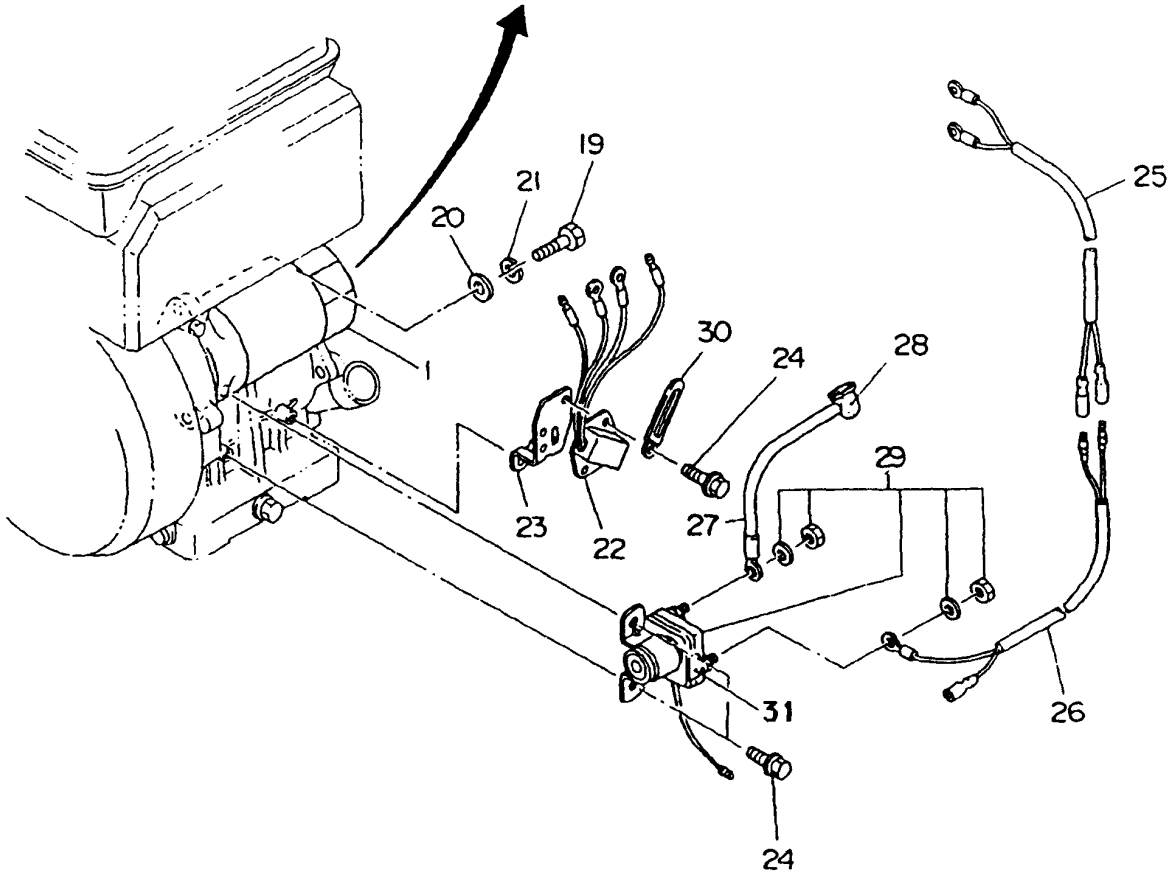
19
21
25
20
30
24
28
1
29
23
22
27
31
26
24

SECTION 7F ELECTRIC STARTER - WISCONSIN ROBIN

REF.	PART NO.	DESCRIPTION	QTY.	REMARKS	FROM-TO	FIG.
1	246-70501-00	STARTING MOTOR	1	Includes items 2 thru 18		750
2	235-70550-08	ARMATURE, AY	1			750
3	235-70555-08	WASHER KIT	2			750
4	235-70560-08	YOKE, AY	1			750
5	235-70565-08	M BUSH (1)	1			750
6	235-70566-08	M BUSH (2)	1			750
7	235-70535-08	BRUSH (+)	1			750
8	246-70580-08	O RING	1			750
9	235-70530-08	BRUSH HOLDER, AY	1			750
10	235-70540-08	BRUSH (-)	1			750
11	235-70545-08	SPRING BRUSH	2			750
12	246-70505-08	REAR COVER, AY	1			750
13	113-70510-08	METAL REAR COVER	1			750
14	246-70521-08	PINION, AY	1			750
15	246-70571-08	STOPPER SET	1			750
16	246-70500-08	FRONT COVER, AY	1			750
17	214-70560-08	FRONT METAL	1			750
18	235-70575-08	THROUGH BOLT	2			750
19	214-79007-01	BOLT, starter	2			750
20	003-10080-00	WASHER	2			750
21	003-20080-00	SPRING WASHER	2			750
22	246-71401-01	DIODE RECTIFIER, compl.	1			750
23	246-76001-01	BRACKET	1			750
24	011-00600-10	FLANGE BOLT	5			750
25	246-73104-01	WIRE 4	1			750
26	246-73105-11	WIRE 5	1			750
27	214-73101-11	WIRE 1	1			750
28	214-78501-03	WIRE CASING	1			750
29	246-77301-00	MAGNETIC SWITCH	1			750
30	056-60002-50	CLAMP	1			750
31	073-20044-80	LABEL, battery	1			750

FIG. 760

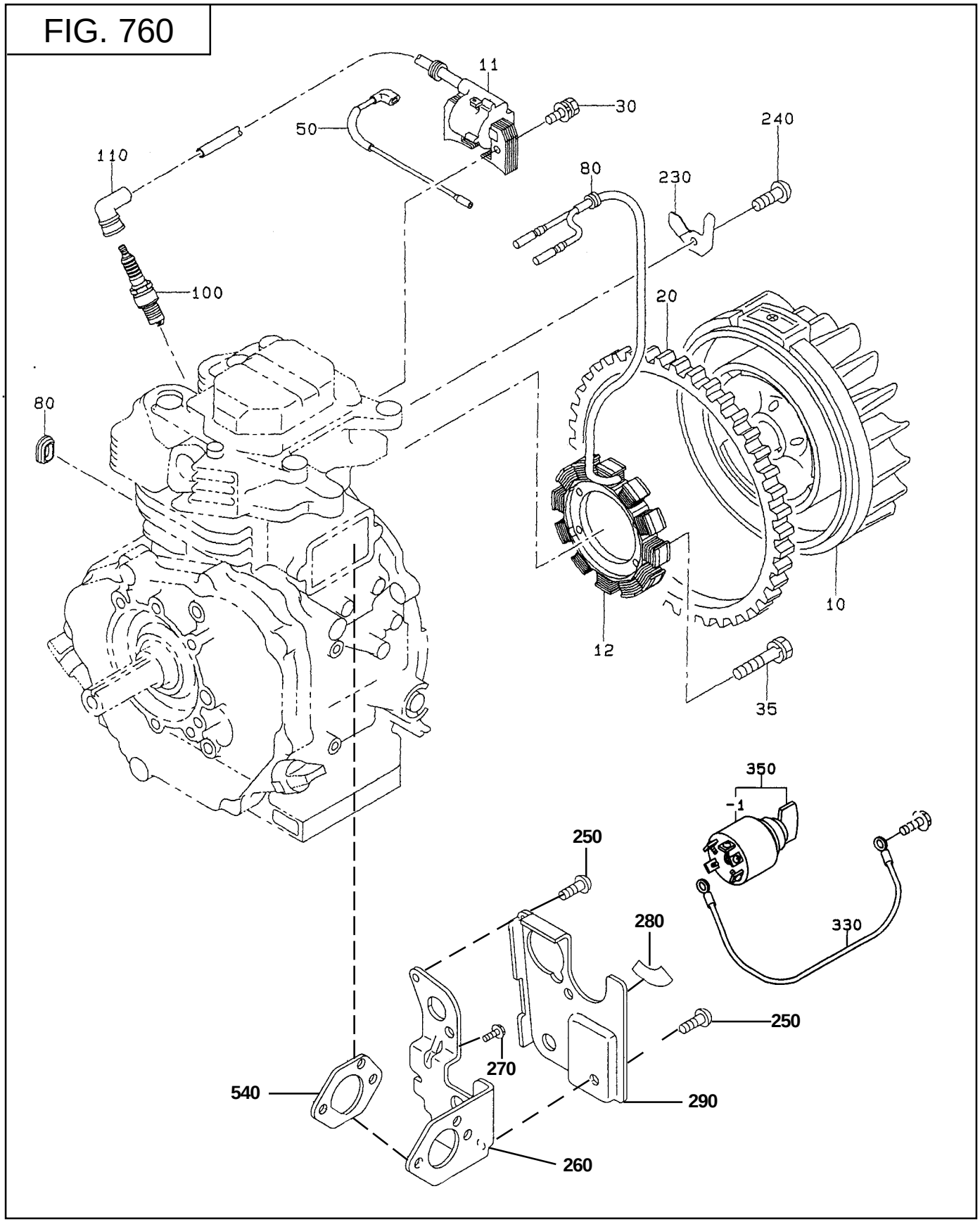
11
30
50
240
110
80
230
100
20
80
10
12
35
350
-1
250
280
330
250
270
540
290
260

SECTION 7G ELECTRIC START - 150 WATT CHARGING

REF.	PART NO.	DESCRIPTION	QTY.	REMARKS	FROM-TO	FIG.
10	246-77205-21	FLYWHEEL	1			760
11	246-78201-21	IGNITION COIL	1			760
12	246-79251-01	CHARGE COIL	1			760
20	246-71002-03	RING GEAR	1			760
30	001-14063-00	BOLT and WASHER	2			760
35	004-35062-00	SCREW and WASHER	4			760
50	246-73101-01	WIRE 1, compl.	1			760
80	226-75501-03	GROMMET	2			760
100	065-01401-00	SPARK PLUG	1			760
110	065-50000-51	SPARK PLUG CAP	1			760
230	246-75502-01	WIRE CLAMP	1			760
240	004-31060-80	PANHEAD SCREW	1			760
250	015-00400-60	TAPPING SCREW	2			760
260	246-40301-11	BRACKET, panel	1			760
270	011-00600-10	FLANGE BOLT	1			760
280	073-20039-70	LABEL, starter motor	1			760
290	246-40306-11	CONTROL PANEL	1			760
330	227-73102-01	WIRE 2, compl.	1			760
350	066-00003-30	SWITCH	1	Includes item -1		760
-1	066-00099-80	KEY	1			760
540	234-36003-03	GASKET	1			760

FIG. 770

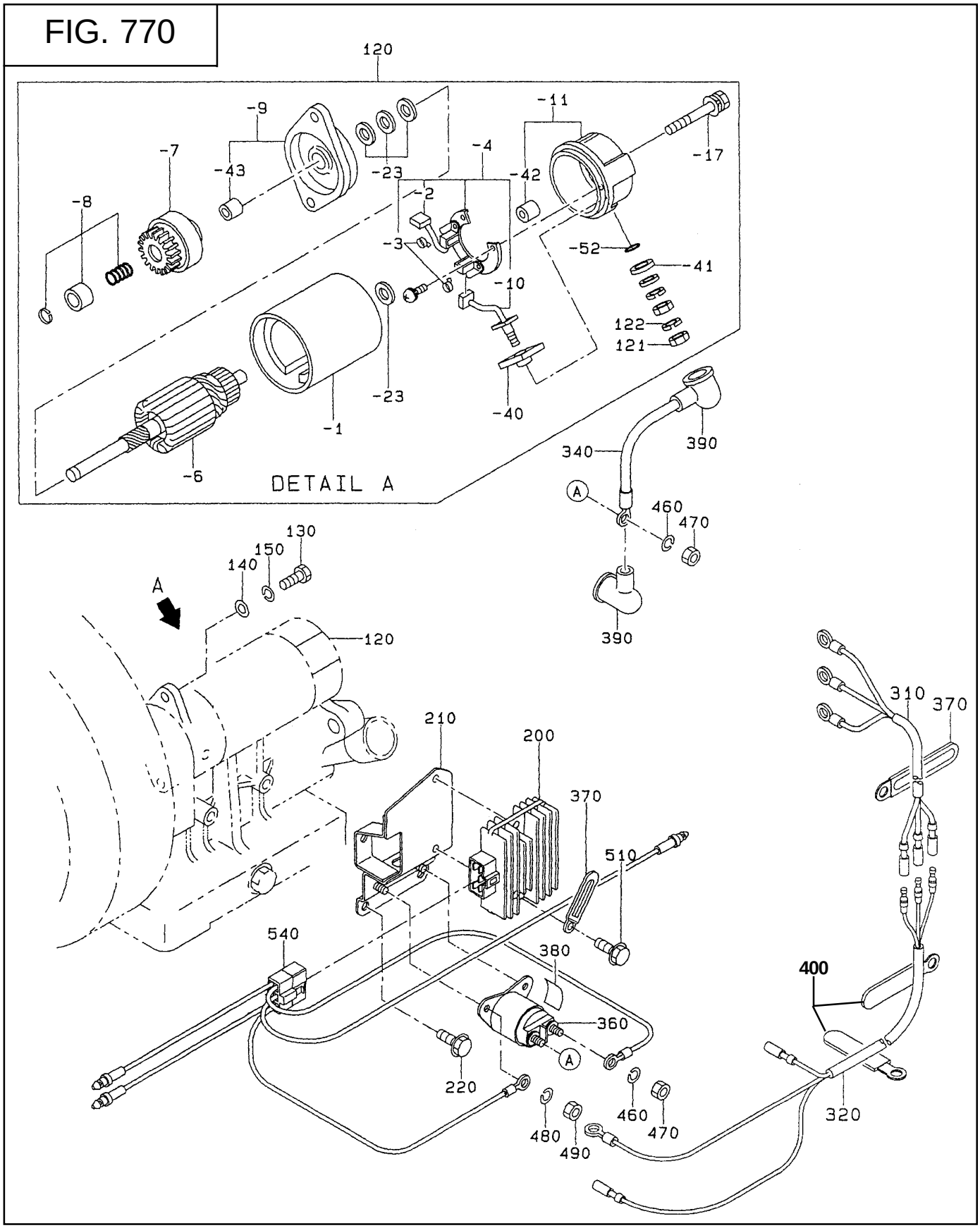
120
-9
-11
-7
-43
-23
-4
-42
-17
-8
-2
-3
-52
-41
-10
122
121
-23
-1
-40
-6
DETAIL A
340
390
A
460
470
390
130
150
140
A
120
210
200
370
510
540
380
400
360
220
460
470
480
490
320
310
370

SECTION 7H ELECTRIC STARTER - 150 WATT CHARGING

REF.	PART NO.	DESCRIPTION	QTY.	REMARKS	FROM-TO	FIG.
120	246-70501-00	STARTING MOTOR	1	Includes items -1 thru -52		770
-1	235-70560-08	YOKE	1			770
-2	235-70535-08	BRUSH (+)	1			770
-3	235-70545-08	SPRING BRUSH	2			770
-4	235-70530-08	BRUSH HOLDER AY	1			770
-6	235-70550-08	ARMATURE	1			770
-7	246-70521-08	PINION SET	1			770
-8	246-70571-08	STOPPER SET, pinion	1			770
-9	246-70500-08	FRONT COVER AY	1			770
-10	235-70540-08	BRUSH (-)	1			770
-11	246-70505-08	REAR COVER AY	1			770
-17	235-70575-08	THROUGH BOLT	2			770
-23	235-70555-08	WASHER KIT	1			770
-40	235-70565-08	M BUSH (1)	1			770
-41	235-70566-08	M BUSH (2)	1			770
-42	113-70510-08	CASE METAL	1			770
-43	214-70560-08	FRONT METAL	1			770
-52	246-70580-08	O RING	1			770
121	002-27060-00	NUT	1			770
122	003-20060-00	SPRING WASHER	1			770
130	214-79007-01	BOLT, starter	2			770
140	003-10080-00	WASHER	2			770
150	003-20080-00	SPRING WASHER	2			770
200	246-71901-01	REGULATOR	1			770
210	246-76004-21	BRACKET, regulator	1			770
220	011-00600-10	FLANGE BOLT	3			770
310	246-73104-01	WIRE 4, compl.	1			770
320	246-73105-21	WIRE 5, compl.	1			770
340	214-73101-11	WIRE 1, compl.	1			770
360	066-10000-10	MAGNETIC SWITCH	1			770
370	056-60002-50	CLAMP	2			770
380	073-20044-80	LABEL, battery	1			770
390	214-78501-03	WIRE CASING	2			770
400	056-60002-60	CLAMP	2			770
460	003-20060-00	SPRING WASHER	2			770
470	002-27060-00	NUT	2			770
480	003-20050-00	SPRING WASHER	2			770
490	002-17050-00	NUT	2			770
510	011-00601-40	FLANGE BOLT	2			770
540	246-73106-21	WIRE 6, compl.	1			770

FIG. 780

OPPOSITE CARBURETOR SIDE

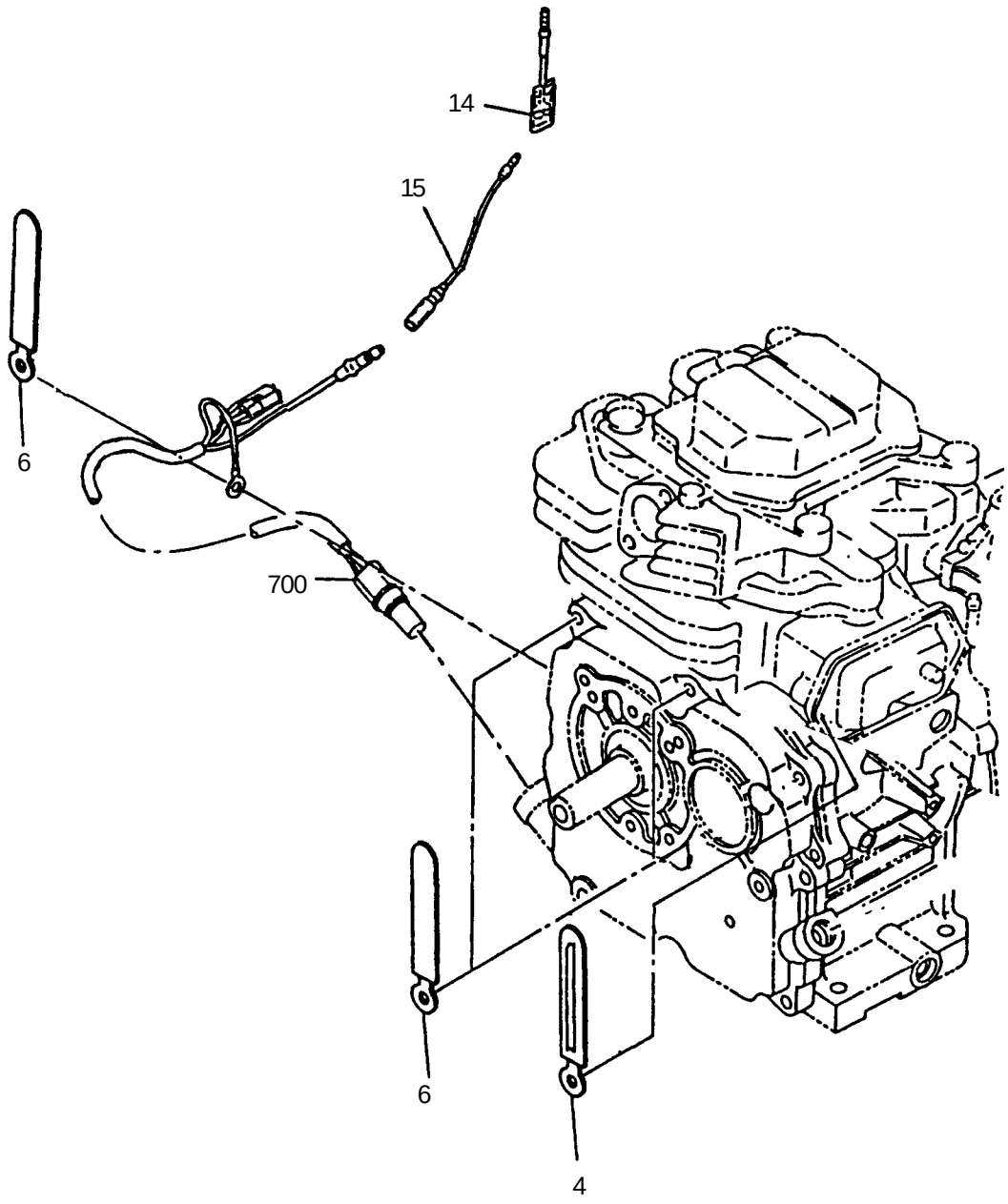

SECTION 7 OIL SENSOR

REF.	PART NO.	DESCRIPTION	QTY.	REMARKS	FROM-TO	FIG.
4	056-60002-50	CLAMP	1			780
6	056-60002-60	CLAMP	3			780
14	246-73103-01	WIRE 3, compl.	1			780
15	246-73118-01	WIRE 18, compl.	1			780
700	KS3-11013-01	OIL SENSOR	1			780

FIG. 790

CARBURETOR SIDE

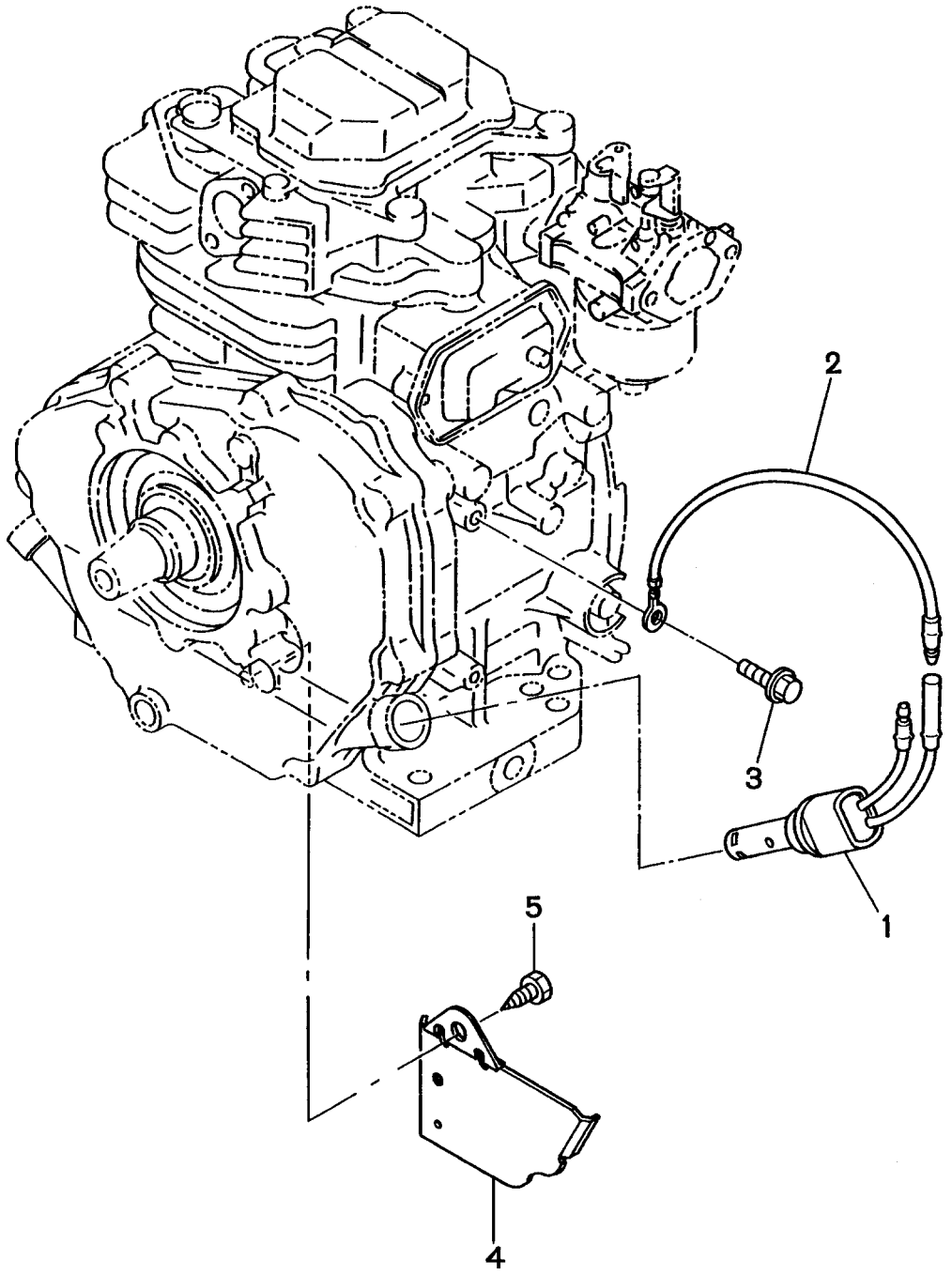

SECTION 7 OIL SENSOR

REF.	PART NO.	DESCRIPTION	QTY.	REMARKS	FROM-TO	FIG.
1	KS3-11012-01	OIL SENSOR	1			790
2	253-73103-01	WIRE 3, compl.	1			790
3	011-00600-10	FLANGE BOLT	1			790
4	246-17501-03	SHELTER PLATE	1			790
5	015-20600-50	TAPPING BOLT	1			790

PRINTED IN THE USA