DESCRIPTION		Part No.	Illus. No.	Quantity	Stock recommds. DIST. Exp.	Stock recommds. DIST. UK	Stock recommds. D	Change Point	REMARKS
Lighting Equipment—*continued*									
Sidelamp		ATJ 8283§	1	2					Part No. change; was NT 3719
Bolt—sidelamp fixing		37H 5123		2					Not available; use 47H 5529
Bolt—sidelamp fixing		47H 5529	2	2					
Base		37H 5125	3	2					
Nut—bolt	**3DL,**	7H 5356	4	2					
Washer—shakeproof—nut	**4DM,**	37H 5013	5	2					
Adaptor and shell	**342, 460**	7H 5354		2					Not available; use 27H 5463
Adaptor		†27H 5463	6	2					
Reflector		†7H 5355§	45	2					
Washer (rubber)		37H 5124	7	2					
Lens		7H 5353	8	2					
Wire—lens		7H 5352	9	1 set					
Rim		7H 5351§	10	2					Part No. change; was 37H 5106
Screw and plate—rim retaining		27H 5026	11	2					
Bulb		47H 5122§	12	2	★		★		
Tail lamps	**4DM**	NT 8059§		2				DE1001 on IDE10388 on 4DM–787–501 to 2926	Not available; use ATJ 8284
	3DL, 4DM	NT 8265§		2				792–501 to 1330 3DL–771–501 to 2233 772–501 to 730	
	3DL, 4DM, 342, 460	ATJ 8284§	13	2				4DM–787–2927 on 792–1331 on 3DL–771–2234 on 772–731 on 460–24000 on 342–24000 on	
Lens	**4DM**	17H 5561§		2				DE1001 on IDE10388 on	Not available; use 17H 2980
Lens	**3DL, 4DM, 342, 460**	17H 2980§	14	2				4DM–787–501 on 792–501 on 3DL–771–501 on 772–501 on 460–24000 on 342–24000 on	
Rubber—lens seating	**4DM**	17H 5082§	15	2				DE1001 on IDE10388 to 18115	
Window	**3DL,**	17H 5562§	16	2					
Rubber—window seating	**4DM,**	17H 5563§	17	2					
Shell—cable cover	**342,**	17H 5559§	18	2					
Washer—cable	**460**	17H 5553§	19	2					
Adaptor assembly		17H 5558§	20	2					
Nut—coupling		17H 5560§	21	2				DE1001 on	
Washer	**4DM**	17H 5556§	22	2				IDE10388 on	
Nut—fixing—thin		17H 5555§	23	2					
Nut—fixing—thick		17H 5554§	24	2					
Nuts									
Coupling		37H 5542§	25	2				4DM–787–501 on	
Fixing	**3DL,**	37H 5538§	26	2				792–501 on	
Fixing	**4DM,**	37H 5539§	24	2				3DL–771–501 on	
Washer	**342,**	37H 5540§	27	2				772–501 on	
Washer—lock	**460**	37H 5543§	28	2				460–24000 on	
Adaptor—body		37H 5541§	29	2				342–24000 on	
Interior—bulb holder		17H 5557§	30	2					
Bulb		47H 5122§	31	2	★		★		

§ **Parts peculiar to Tractor only** **See title-page for application** **†Revised Information—Issue 2**

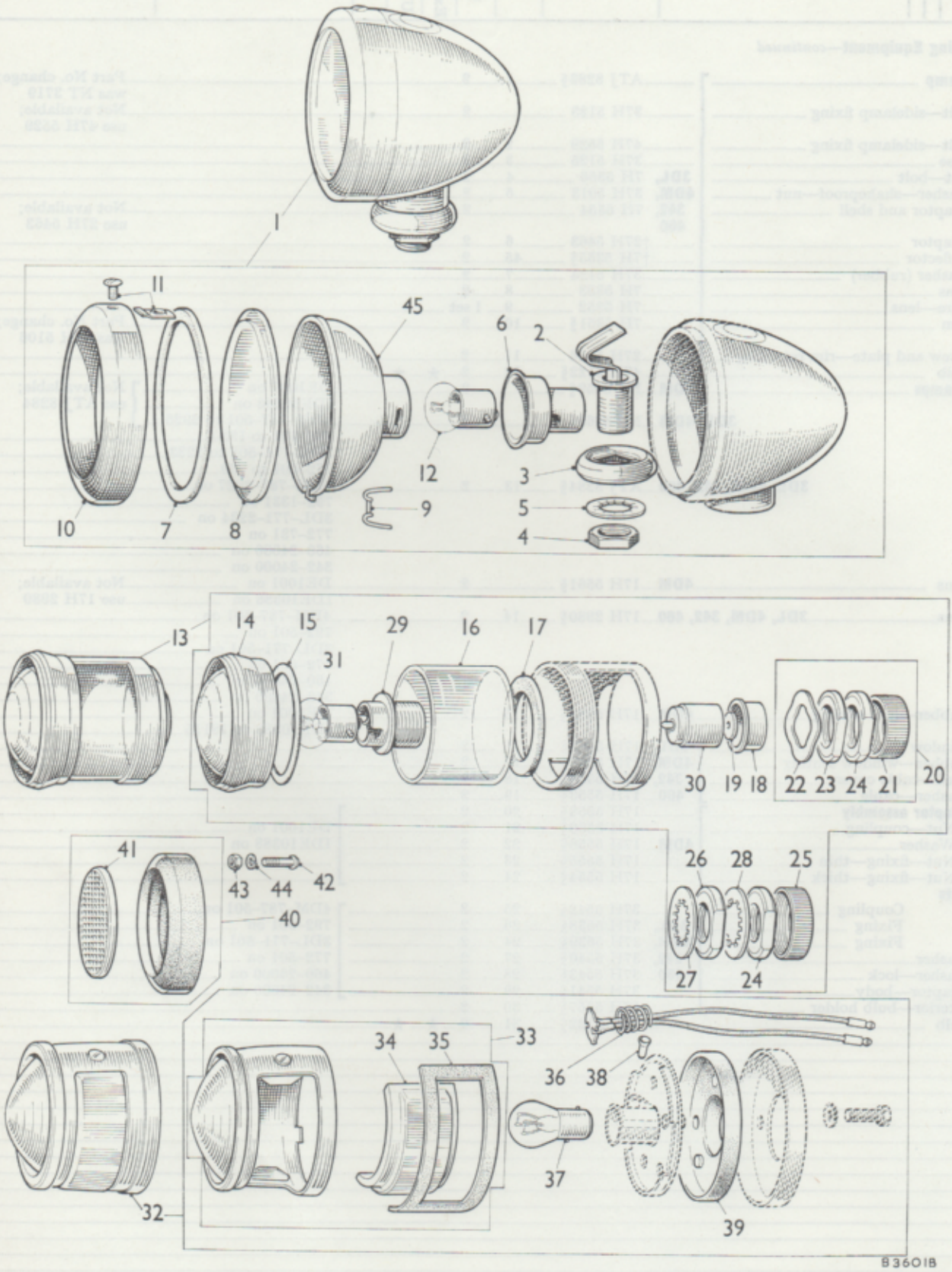
1
11
45
6
2
12
3
9
5
4
10
7
8
13
14
15
29
16
17
31
30
19
18
22
23
24
21
20
41
43
44
42
40
26
28
25
27
24
34
35
33
36
38
37
32
39
836018

DESCRIPTION	Part No.	Illus. No.	Quantity	Stock recommds. DIST. Exp.	Stock recommds. DIST. UK	Stock recommds. D	Change Point	REMARKS
Lighting Equipment—*continued*								
Lamp—stop tail	ATJ 8351§	32	1					
Body	17H 2001§	33	1					
Lens	17H 2002§	34	1					
Gasket—lens seating	**4DM,** 17H 2003§	35	1					
Interior—bulb holder	**460** 37H 5459	36	1					
Bulb	BFS 380	37	1	★	★			
Sleeve—terminal	7H 5582	38	1					
Gasket—seating base	17H 2004§	39	1					
Reflector—rear	AJA 5045	40	2					Part No. change; was NT 7262
Lens	**3DL, 4DM,** 37H 5107	41	2					
Screw—reflector to bracket	**342,** PMZ 0308	42	2					
Nut—screw	**460** FNZ 103	43	2					
Washer—spring—nut	LWZ 203	44	2					

§ Parts peculiar to Tractor only

See title-page for application

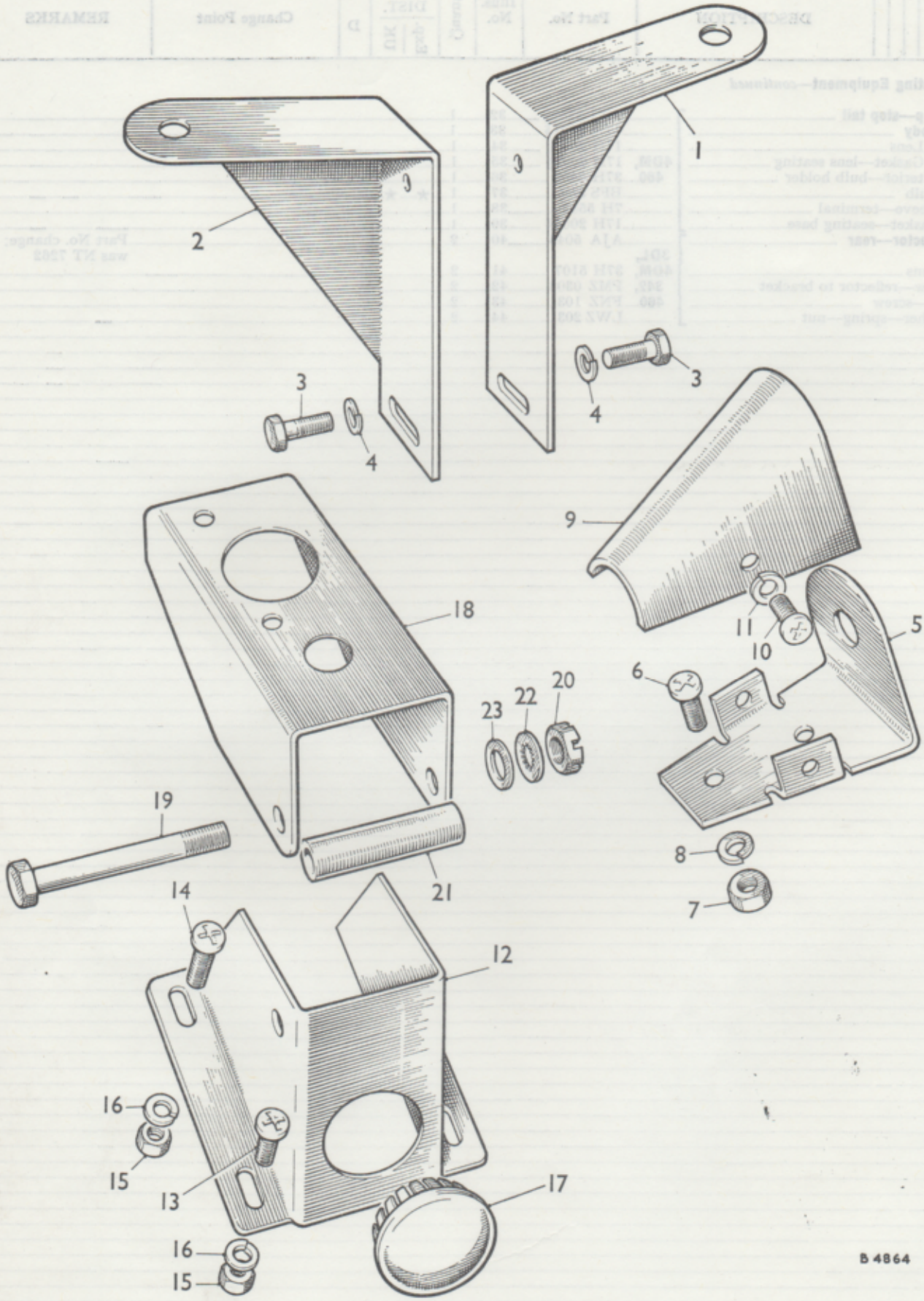

To face page MR 44

DESCRIPTION	Part No.	Illus. No.	Quantity	Stock recommds. DIST. Exp.	Stock recommds. DIST. UK	Stock recommds. D	Change Point	REMARKS
Lighting Equipment—*continued*								
FIXING BRACKETS								
Bracket—headlamp—RH	NT 3836§	1	1					
Bracket—headlamp—LH	NT 4234§	2	1					
Screw—bracket to radiator case	HNS 0508	3	4					
Washer—spring—screw	LWN 205	4	4					
Bracket—sidelamp	NT 5552§	5	2					
Screw—bracket to mudguard	PMZ 0408	6	4					
Nut—screw	FNZ 104	7	4					
Washer—spring—nut	LWZ 204	8	4					
Cover—sidelamp bracket	NT 3829§	9	2					
Screw—cover to bracket	PMZ 0304	10	4					
Washer—spring—screw	LWN 203	11	4					
Bracket—rear number-plate and floodlamp **UK only**	**3DL, 4DM,** NT 3831§	12	1					
Bracket—rear number-plate and floodlamp **Not UK**	**342, 460** NT 4233§	12	1					
Screw—bracket to mudguard	PMZ 0408	13	3					
Screw—bracket to mudguard	PMZ 0410	14	1					
Nut—screw	FNZ 104	15	4					
Washer—spring—nut	LWZ 204	16	4					
Plug—blanking—tail lamp	NT 4760§	17	1					
Bracket—changeover switch and floodlamp **UK only**	NT 3833§	18	1					
Bracket—changeover switch and floodlamp **Not UK**	NT 4235§	18	1					
Bolt—bracket to number-plate bracket	ATJ 1008§	19	1					
Nut—bolt	FNZ 406	20	1					
Piece—distance	NT 3832§	21	1					
Washer—shakeproof—nut	LWZ 406	22	1					
Washer—plain—nut	PWZ 106	23	1					

§ **Parts peculiar to Tractor only**

See title-page for application

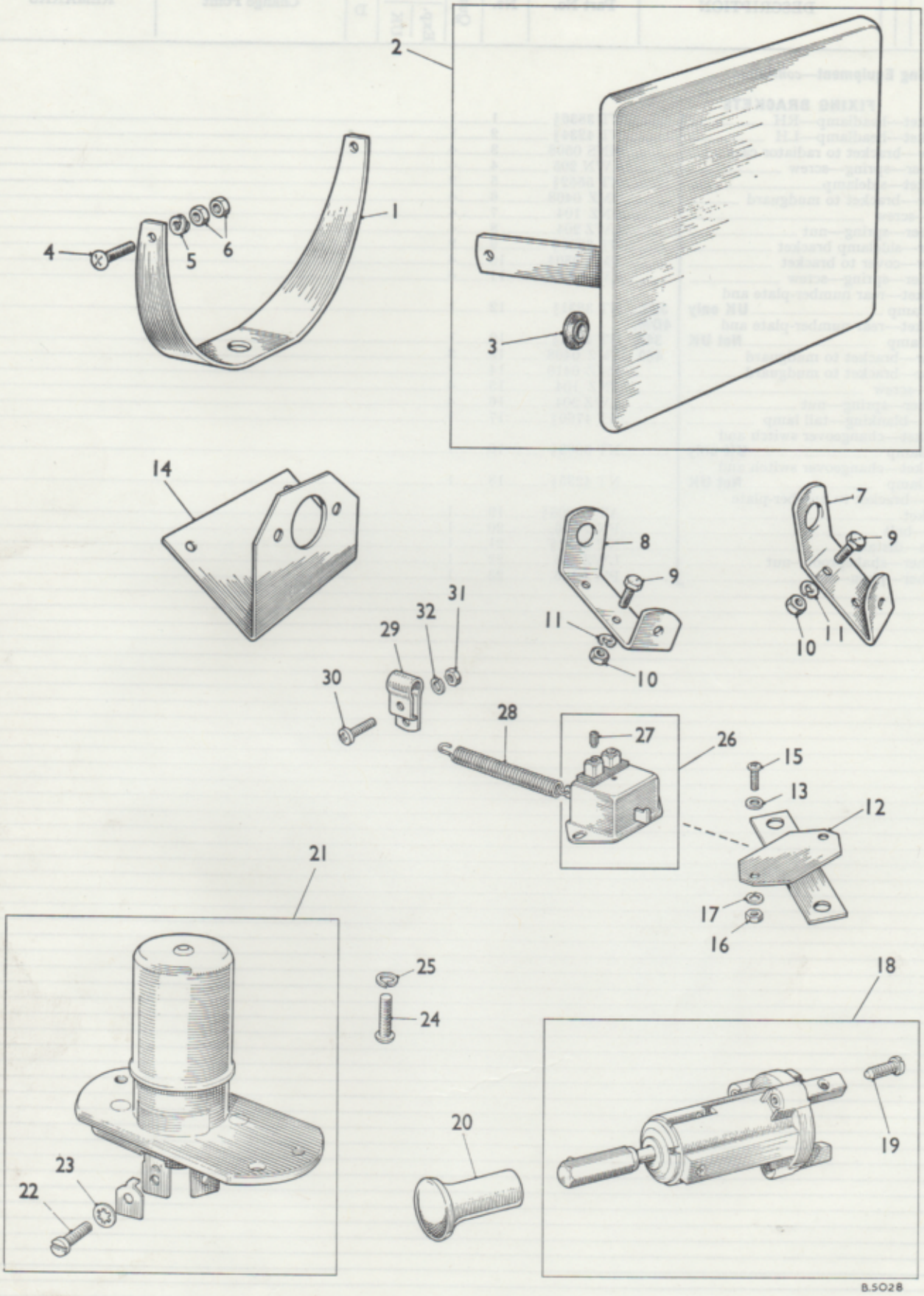

To face page MR 45

DESCRIPTION	Part No.	Illus. No.	Quantity	Stock recommds. DIST. Exp.	Stock recommds. DIST. UK	Stock recommds. D	Change Point	REMARKS
Lighting Equipment—*continued*								
Fixing Brackets—*continued*								
Bracket—hinge—number-plate	NT 3834§	1	1					
Number-plate—rear (UK only)	NT 3900§	2	1					
Buffer (rubber) (UK only)	NT 3915§	3	1					
Number-plate—rear (Not UK)	NT 6323§	2	1					
Buffer (rubber) (Not UK)	NT 3924§	3	1					
Screw—number-plate to bracket	PMZ 0412	4	2					
Washer—spring—screw	AJD 7722 Z	5	2					
Nut—screw	FNZ 204	6	4					
Bracket—tail lamp and reflector—RH	NT 7259§	7	1					
Bracket—tail lamp and reflector—LH	NT 7260§	8	1					
Screw—bracket to mudguard	HZS 0404	9	4					
Nut—screw	FNZ 104	10	4					
Washer—spring—nut	LWZ 204	11	4					
Bracket—stop tail lamp switch	ATJ 8366§	12	1					
Washer—plain—bracket	PWZ 109	13	2					
Bracket—stop tail lamp	ATJ 8354§	14	1					
Screw—stop lamp switch to bracket	PMZ 0304	15	2					
Nut—screw (3DL, 4DM, 342, 460)	FNZ 103	16	2					
Washer—spring—nut (3DL, 4DM, 342, 460)	LWZ 203	17	2					
SWITCHES								
Switch—lighting	17H 5583§		1					Not available; use 3H 3098
Switch—lighting	3H 3098	18	1					
Screw—terminal	17H 5588	19	3					
Knob—switch	AHH 5362	20	1					
Switch—change-over	11G 2007	21	1					Part No. change; was 116149
Screw—terminal	17H 5594	22	3					
Washer—shakeproof—screw	LWN 302	23	3					
Screw—switch to bracket	AJD 1204 Z	24	2					
Washer—spring—screw	LWZ 203	25	2					
Switch—stop tail lamp	2H 1640	26	1					
Screw—terminal	17H 5588	27	2					
Spring—switch	ATJ 8350§	28	1					
Clip—adjuster	ATJ 8367§	29	1					
Screw—clip	PMZ 0308	30	1					
Nut—screw	FNZ 103	31	1					
Washer—spring—nut	LWZ 203	32	1					

§ **Parts peculiar to Tractor only**

See title-page for application

		DESCRIPTION	Part No.	Illus. No.	Quantity	Stock recommnds. DIST. UK	Stock recommnds. DIST. Exp.	Stock recommnds. D	Change Point	REMARKS
		Lighting Equipment—continued								
		Fixing Brackets—continued								
		Bracket—hinge—number-plate	NT 28445	1	1					
		Number-plate—rear	NT 38005	2	1					
		Buffer (rubber)	NT 38145	3	1					
		Number-plate—rear	NT 68258	5	1					
		Buffer (rubber)	NT 72245	6	1					
		Screw—number-plate to bracket	PZ2 6112	4	2					
		Washer—spring—screw	AJD 7722 Z	5	2					
		Nut—screw	PN2 204	6	4					
		Bracket—tail lamp and reflector—RH	NT 72604	7	1					
		Bracket—tail lamp and reflector—LH	NT 72605	8	1					
		Screw—bracket to mudguard	HN2 0604	9	4					
		Nut—screw	PN2 104	10	4					
		Washer—spring—nut	LWZ 204	11	4					
		Bracket—stop tail lamp switch	ATI 82604	12	1					
		Washer—plain—bracket	FWZ 108	13	2					
		Bracket—stop tail lamp	ATI 82605	14	1					
		Screw—stop lamp switch to bracket	PZ2 0604	15	2					
		Nut—screw	PN2 103	16	2					
		Washer—spring—nut	LWZ 203	17	2					
		SWITCHES								
		Switch—lighting	17H 35805	1						Not available; use 3H 3005
		Switch—lighting	3H 3005	18	1					
		Screw—terminal	17H 3558	19	2					
		Knob—switch	AHH 3302	20	1					
		Switch—change-over	1H 3007	21	1					Part No. change; was 1H 4149
		Screw—terminal	17H 3564	22	8					
		Washer—shakeproof—screw	LWN 303	23	8					
		Screw—switch to bracket	AJD 1504 Z	24	2					
		Washer—spring—screw	LWZ 203	25	2					
		Switch—stop tail lamp	3H 1600	26	1					
		Screw—terminal	17H 3558	27	2					
		Spring—switch	ATI 82605	28	1					
		Clip—adjuster	ATI 81675	29	1					
		Screw—clip	PZ2 0604	30	1					
		Nut—screw	PN2 103	31	1					
		Washer—spring—nut	LWZ 203	32	1					

Parts peculiar to Tractor only — See title-page for application

Lighting Equipment—*continued*

WIRING

Cables

DESCRIPTION		Part No.	Illus. No.	Quantity	Stock recommds. DIST. Exp.	Stock recommds. DIST. UK	Stock recommds. D	Change Point	REMARKS
Headlamp—main beam		NT 7073§		2				4DM–DE1001 on IDE10388 on	Not available; use ATJ 8502
Dip switch to headlamp junction		NT 6457§		1				787–501 on 792–501 on	
LH to RH headlamp junction		NT 7124§		1				460–24000 to 50461	
Headlamp—main beam		ATJ 8502§		1				460–50462 on	
Headlamp—dipped beam		NT 6458§		2					
Light switch to sidelamp junction		NT 7072§		1					
Light switch to sidelamp junction	4DM, 460, Except France	NT 7075§		1					
Sidelamp junction to change-over switch		NT 7076§		1					
Change-over switch to floodlamp		NT 7077§		1					
Tail lamp to change-over switch		NT 7263§		1					
Tail lamp to change-over switch		NT 7078§		1					Required when single tail lamp is fitted
Tail lamp to side lamp junction		NT 7264§		1					
Side lamp to junction		NT 7079§		2					
Dip switch to light switch		NT 6455§		1					
Headlamp—main beam		NT 7073§		2				4DM–DE1001on IDE 10388 on	Not available; use ATJ 8501
Dip switch to headlamp junction		NT 6457§		1				787–501 to 21229 (less 12518 to 20000)	
LH to RH headlamp junction		NT 7124§		1				792–501 to 11929 (less 4800 to 10000)	
Headlamp—dipped beam		NT 6458§		2					
Headlamp—main beam		ATJ 8433§		2				4DM–787–21230 on (plus 12518 to 20000)	Not available; use ATJ 8501
Dip switch to headlamp junction		NT 6457§		1				792–11930 on (plus 4800 to 10000)	
LH to RH headlamp junction		NT 7124§		1				460–24000 to 50520	
Headlamp—dipped beam	4DM, 460, France	ATJ 8434§		2					
Headlamp—main beam		ATJ 8501§		2				460–50521 on	
Headlamp—dipped beam		ATJ 8434§		2					
Light switch to sidelamp junction		NT 7072§		1					
Light switch to sidelamp junction		NT 7075§		1					
Sidelamp junction to change-over switch		NT 7076§		1					
Change-over switch to floodlamp		NT 7077§		1					
Tail lamp to change-over switch		NT 7078§		1					
Sidelamp to junction		NT 7079§		2					
Dip switch to light switch		NT 6455§		1					
Battery to stop tail lamp switch		ATJ 8346§		1					Required when single stop tail lamp is fitted
Change-over switch to stop tail lamp	4DM, 460	ATJ 8358§		1					
Stop tail lamp to switch		ATJ 8347§		1					

§ **Parts peculiar to Tractor only** **See title-page for application**

| | | |

DESCRIPTION	Part No.	Illus. No.	Quantity	Stock recommds. DIST. Exp. / UK	Stock recommds. D	Change Point	REMARKS
Lighting Equipment—*continued*							
Wiring—*continued*							
Cables							
Headlamp—main beam	NT 8397§		2				Not available; use ATJ 8252
Headlamp—dipped beam	ATJ 8252§		2			3DL–771–501 on 772–501 on	
Dip switch to headlamp junction	ATJ 8251§		1			342–24000 to 53020	
LH to RH headlamp junction	ATJ 8250§		1				
Headlamp—main beam	ATJ 8252§		2				
Headlamp—dipped beam	ATJ 8500§		2			342–53021 on	
Light switch to sidelamp junction	NT 8395§		1				
Light switch to sidelamp junction	**3DL, 342, Except France** NT 8396§		1				
Sidelamp junction to change-over switch	NT 8398§		1				
Change-over switch to floodlamp	NT 7077§		1				
Tail lamp to change-over switch	NT 7263§		1				
Tail lamp to sidelamp junction	NT 7264§		1				
Tail lamp to change-over switch	NT 7078§		1				Required when single tail lamp is fitted
Sidelamp to junction	NT 7079§		2				
Dip switch to light switch	NT 6455§		1				
Headlamp—main beam	NT 8397§		2				Not available; use ATJ 8252
Headlamp—dipped beam	ATJ 8252§		2			3DL–771–501 to 8619	
Dip switch to headlamp junction	ATJ 8251§		1			772–501 to 2605	
LH to RH headlamp junction	ATJ 8250§		1				
Headlamp—main beam	ATJ 8435§		2				
Headlamp—dipped beam	ATJ 8437§		2			3DL–771–8620 on	
Dip switch to headlamp junction	ATJ 8436§		1			772–2606 on 342–24000 to 53020	
LH to RH headlamp junction	**3DL, 342, France** ATJ 8437§		1				
Headlamp—main beam	ATJ 8499§		2				
Headlamp—dipped beam	ATJ 8438§		2			342–53021 on	
Light switch to sidelamp junction	NT 8395§		1				
Light switch to sidelamp junction	NT 8396§		1				
Sidelamp junction to change-over switch	NT 8398§		1				
Change-over switch to floodlamp	NT 7077§		1				
Tail lamp to change-over switch	NT 7078§		1				
Sidelamp to junction	NT 7079§		2				
Dip switch to light switch	NT 6455§		1				
Battery to stop tail lamp switch	ATJ 8346§		1				Required when single stop tail lamp is fitted
Change-over switch to stop tail lamp	**3DL, 342** ATJ 8358§		1				
Stop tail lamp to switch	ATJ 8347§		1				

§ **Parts peculiar to Tractor only**

See title-page for application

DESCRIPTION	Part No.	Illus. No.	Amount	Stock recommds. DIST. dxg	Stock recommds. DIST. MU	Stock recommds. D	Change Point	REMARKS
Lighting Equipment—continued								
Wiring—continued								
Cables								
Headlamp—main beam	NT 8397§		2					Not available; use ATJ 8252
Headlamp—dipped beam	ATJ 8252§		2				3DL-771-501 on 772-501 on 342-24000 to 53020	
Dip switch to headlamp junction	ATJ 8251§		1					
L.H to RH headlamp junction	ATJ 8250§		1					
Headlamp—main beam	ATJ 8252§		2				342-53021 on	
Headlamp—dipped beam	ATJ 8500§		2					
Light switch to sidelamp junction	NT 8395§		1					
Light switch to sidelamp junction	3DL, 342, Except France NT 8396§		1					
Sidelamp junction to change-over switch	NT 8398§		1					
Change-over switch to floodlamp	NT 7077§		1					
Tail lamp to change-over switch	NT 7263§		1					
Tail lamp to sidelamp junction	NT 7264§		1					
Tail lamp to change-over switch	NT 7078§		1					Required when single tail lamp is fitted
Sidelamp to junction	NT 7079§		2					
Dip switch to light switch	NT 6455§		1					
Headlamp—main beam	NT 8397§		2					Not available; use ATJ 8252
Headlamp—dipped beam	ATJ 8252§		2				3DL-771-501 to 8619 772-501 to 2606	
Dip switch to headlamp junction	ATJ 8251§		1					
L.H to RH headlamp junction	ATJ 8250§		1					
Headlamp—main beam	ATJ 8435§		2					
Headlamp—dipped beam	ATJ 8437§		2				3DL-771-8620 on 772-2606 on 342-24000 to 53020	
Dip switch to headlamp junction	ATJ 8436§		1					
L.H to RH headlamp junction	3DL, 342, France ATJ 8437§		1					
Headlamp—main beam	ATJ 8499§		2				342-53021 on	
Headlamp—dipped beam	ATJ 8438§		2					
Light switch to sidelamp junction	NT 8395§		1					
Light switch to sidelamp junction	NT 8396§		1					
Sidelamp junction to change-over switch	NT 8398§		1					
Change-over switch to floodlamp	NT 7077§		1					
Tail lamp to change-over switch	NT 7078§		1					
Sidelamp to junction	NT 7079§		2					
Dip switch to light switch	NT 6455§		1					
Battery to stop tail lamp switch	ATJ 8346§		1					Required when single stop tail lamp is fitted
Change-over switch to stop tail lamp	3DL, 342 ATJ 8358§		1					
Stop tail lamp to switch	ATJ 8347§		1					

§ Parts peculiar to Tractor only

See title-page for application

DESCRIPTION	Part No.	Illus. No.	Quantity	Stock recommds. DIST. Exp.	UK	D	Change Point	REMARKS
Lighting Equipment—*continued*								
Wiring—*continued*								
Clip—cable								
Headlamp bracket and engine frame	AAA 6079		4					Part No. change; was 83559
Headlamp bracket	PCR 0411		2					
Gearbox	NT 3943§		3					
Mudguard	CHR 0409		10					
Mudguard	NT 4358§		2					
Rear floodlamp bracket	AAA 6079		1					Part No. change: was 83559
Frame—LH	NT 7148§		2					
Axle casing—RH	ATJ 8422§		2					When stop tail lamp is fitted
Gearbox—RH	ATJ 8356§		2					
Screw	PMZ 0406		12					
Nut	FNZ 104		12					
Washer—spring	LWZ 204		12					
Kit—electric lighting, horn and number plate 460 UK only	†ATJ 9510§		1					
Kit—electric lighting, horn and number plate 342 UK only	†ATJ 9511§		1					
Headlamp	†ATJ 8280§		2					For details see page MR40 and plate R34
Floodlamp—rear	†ATJ 8278§		1					
Sidelamp	†ATJ 8283§		2					For details see page MR42 and plate R36
Tail lamp	†ATJ 8284§		2					
Reflector—rear	†AJA 5045§		2					For details see page MR43 and plate R36
Screw	†PMZ 0308		2					
Nut	†FNZ 103		2					
Washer—spring	†LWZ 203		2					
Bracket—headlamp RH	†NT 3836§		1					
Bracket—headlamp LH	†NT 4234§		1					
Screw	†HNS 0508		4					
Washer—spring	†LWN 205		4					
Bracket—sidelamp	†NT 5552§		2					
Screw	†PMZ 0408		4					
Nut	†FNZ 104		4					
Washer—spring	†LWZ 204		4					
Cover—sidelamp bracket	†NT 3829§		2					For details see page MR24 and plate R37
Screw	†PMZ 0304		4					
Washer—spring	†LWN 203		4					
Bracket—rear floodlamp	†NT 3831§		1					
Screw	†PMZ 0408		3					
Screw	†PMZ 0410		1					
Nut	†FNZ 104		4					
Washer—spring	†LWZ 204		4					
Bracket—changeover switch	†NT 3833§		1					
Bolt—bracket	†ATJ 1008§		1					
Nut	†FNZ 406		1					
Piece—distance	†NT 3832§		1					
Washer—shakeproof	†LWZ 406		1					
Washer—plain	†PWZ 106		1					
Bracket—hinge—number plate	†NT 3834§		1					For details see page MR45 and plate R38
Number plate—rear	†NT 3900§		1					
Screw	†PMZ 0412		2					
Washer—spring	†AJD 7722Z		2					
Nut	†FNZ 204		4					
Bracket—tail lamp RH	†NT 7259§		1					
Bracket—tail lamp LH	†NT 7260§		1					
Screw	†HZS 0404		4					
Nut	†FNZ 104		4					
Washer—spring	†LWZ 204		4					
Switch—lighting	†3H 3098		1					
Knob—switch	†AHH 5362		1					
Switch—changeover	†11G 2007		1					
Screw	†AJD 1204Z		2					
Washer—spring	†LWZ 203		2					

| | | |

DESCRIPTION	Part No.	Illus. No.	Quantity	Stock recommds. DIST. Exp.	Stock recommds. DIST. UK	Stock recommds. D	Change Point	REMARKS
Lighting equipment—*continued*								
Cable—lighting								
Headlamp	†ATJ 8502§		2					
Headlamp	†NT 6458§		2					
Lighting switch	†NT 7072§		1					
Lighting switch	†NT 7075§		1					For details see page MR46
Sidelamp	460 †NT 7076§		1					
Changeover switch	†NT 7077§		1					
Tail lamp	†NT 7263§		1					
Tail lamp	†NT 7264§		1					
Sidelamp	†NT 7079§		2					
Dip switch	†NT 6455§		1					
Headlamp	†ATJ 8252§		2					
Headlamp	†ATJ 8500§		2					
Light switch	†NT 8395§		1					
Light switch	342 †NT 8396§		1					For details see page MR47
Sidelamp	†NT 8398§		1					
Changeover switch	†NT 7077§		1					
Tail lamp	†NT 7263§		1					
Tail lamp	†NT 7264§		1					
Side lamp	†NT 7079§		2					
Dip switch	†NT 6455§		1					
Clip—cable								
Headlamp	†AAA 6079		4					
Headlamp	†PCR 0411		2					
Gearbox	†NT 3943§		3					
Mudguard	†CHR 0409		10					For details see page MR48
Mudguard	†NT 4358§		2					
Rear floodlamp	†AAA 6079		1					
Frame—LH	†NT 7148§		2					
Screw	†PMZ 0406		12					
Nut	†FNZ 104		12					
Washer—spring	†LWZ 204		12					
Horn	†ATJ 8477§		1					
Bracket—horn	†ATJ 8259§		1					
Screw	†PMZ 0308		2					
Nut	†FNZ 103		2					For details see page MR55 and plate R43
Washer—spring	†LWZ 203		2					
Screw	†HNZ 0606		1					
Nut	†FNZ 106		1					
Washer—spring	†LWZ 206		1					
Horn push and dip switch	†27H 5106		1					
Dash lamp	†NT 5837§		1					For details see page ML1 and plate L1
Screw	†PMZ 0206		2					
Nut	†CNZ 102		2					
Washer—spring	†LWZ 202		2					
Number plate—front	†NT 3853§		1					For details see page MN6 and plate N5
Stud—number plate	†NT 5757§		2					
Nut	†FNZ 105		4					

§Parts peculiar to Tractor only

See title-page for application

†Revised Information

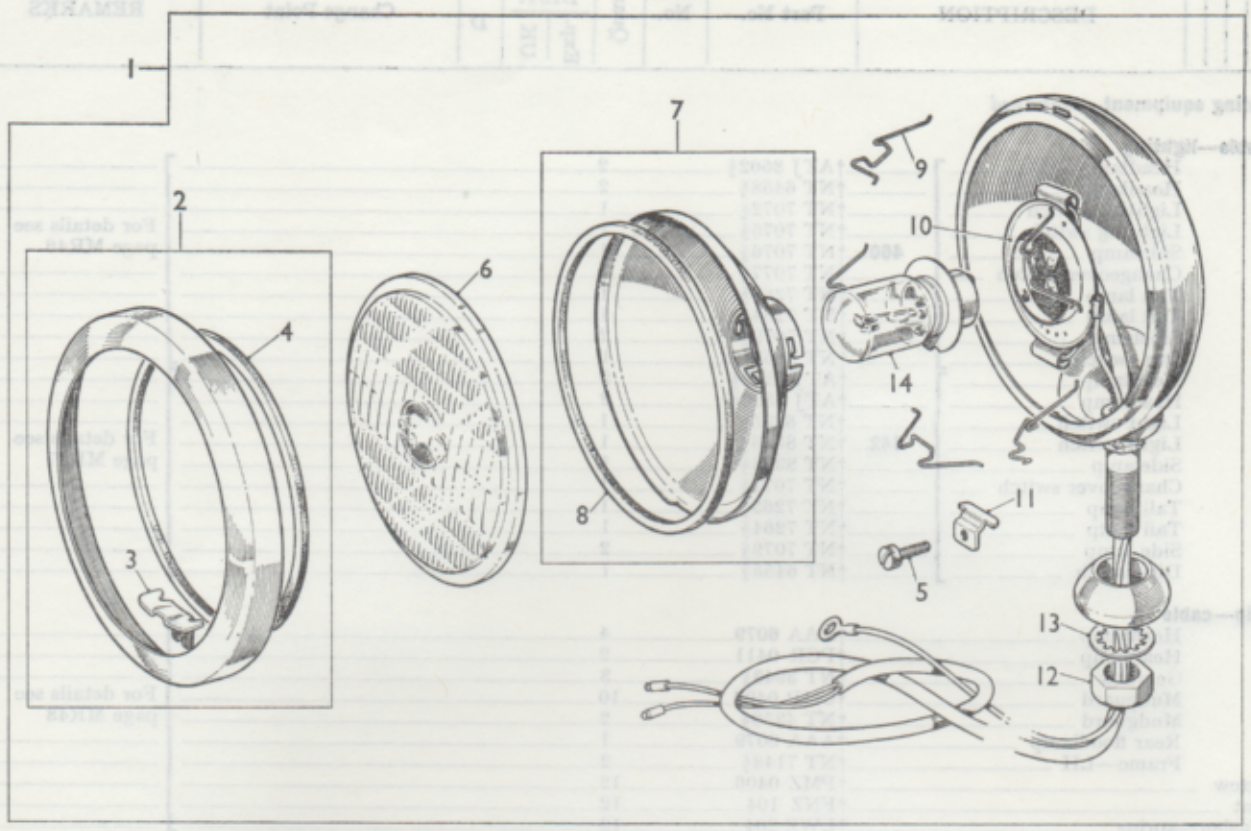
1
2
3
4
5
6
7
8
9
10
11
12
13
14

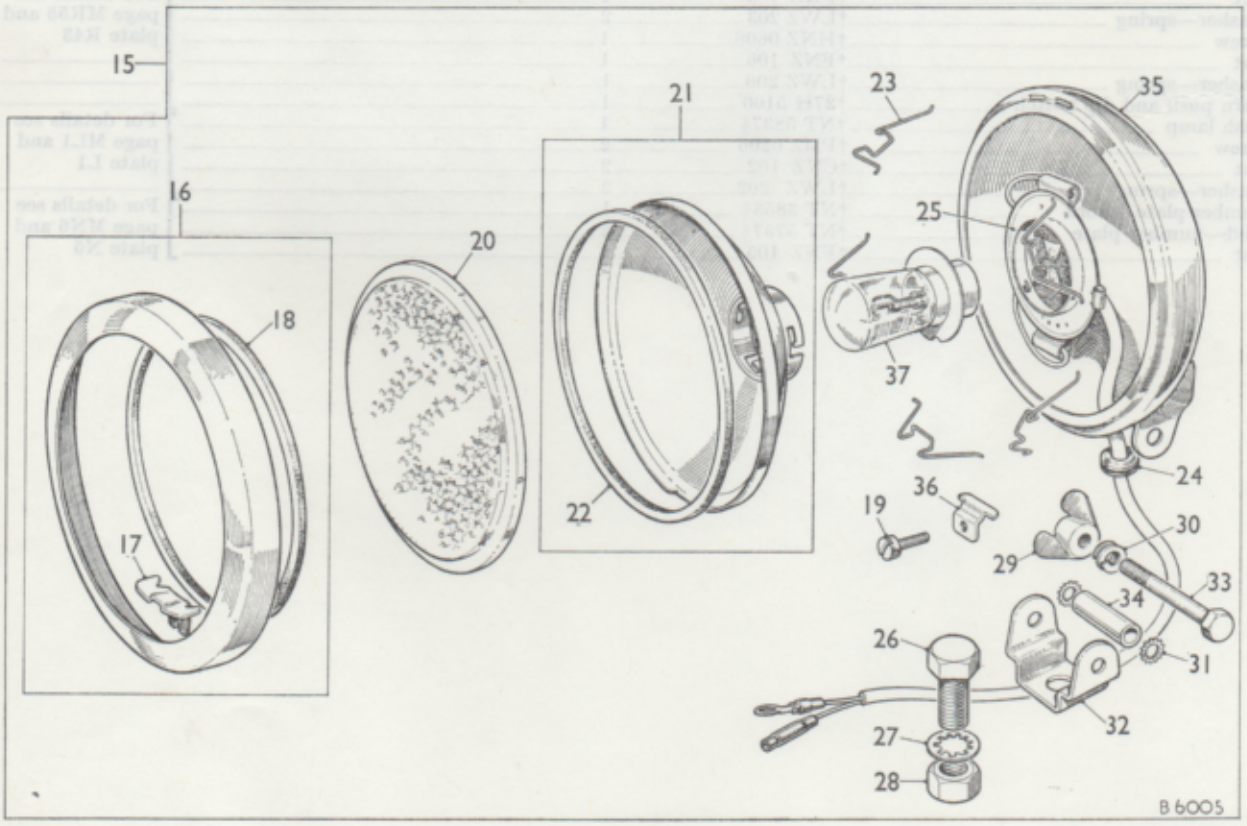
15
16
17
18
19
20
21
22
23
24
25
26
27
28
29
30
31
32
33
34
35
36
37
B 6005

DESCRIPTION	Part No.	Illus. No.	Quantity	Stock recommds. DIST. Exp.	Stock recommds. DIST. UK	Stock recommds. D	Change Point	REMARKS
Lighting Equipment—*continued*								
Headlamp—vertical dipping	ATJ 2075§	1	2					
Rim	27H 4501§	2	2					
Catch—rim screw	27H 4502§	3	2					
Gasket—seating	27H 4503§	4	2					
Screw—rim fixing	**10/42** 27H 4504§	5	2					
Glass	**10/60** 27H 4727§	6	2					
Reflector	**Except** 27H 4506§	7	2					
Gasket—seating	**France** 27H 4507§	8	2					
Wire—glass fixing	**and** 27H 4508§	9	10					
Contact	**Netherlands** †27H 9142§	10	2					Correction; was 27H 4510
Catch—body	27H 4520§	11	2					
Nut—lamp fixing	†27H 5458§	12	2					WSE use 27H 7632
Nut—lamp fixing	†27H 7632§	12	2					
Washer—shakeproof	†27H 4726§	13	2					WSE use LWZ 409
Washer—shakeproof	†LWZ 409	13	2					
Bulb	27H 4728§	14	2					
Floodlamp—rear	ATJ 2072§	15	1					
Rim	27H 4501§	16	1					
Catch—rim screw	27H 4502§	17	1					
Gasket—seating	27H 4503§	18	1					
Screw—rim fixing	27H 4504§	19	1					
Glass	27H 4505§	20	1					
Reflector	27H 4506§	21	1					
Gasket—seating	27H 4507§	22	1					
Wire—glass fixing	27H 4508§	23	5					
Grommet—cable	27H 4509§	24	1					
Contact	**10/42** 27H 4510§	25	1					
Bolt—lamp fixing	**10/60** †27H 4511§	26	1					WSE use ZCS 0808
Bolt—lamp fixing	†ZCS 0808	26	1					
Washer—shakeproof—bolt	LWN 408§	27	1					Part No. change; was 27H 4512
Nut—lamp fixing	27H 4513§	28	1					
Nut—wing	27H 4514§	29	1					
Washer—spring	†27H 4515§	30	1					
Washer—spring	†AJD 7722	30	1					WSE use AJD 7722
Washer—shakeproof	†27H 4516§	31	1					
Washer—shakeproof	†LWZ 504	31	1					WSE use LWZ 504
Bracket—mounting	27H 4519§	32	1					
Bolt—bracket	†27H 4517§	33	1					
Bolt—bracket	†HBZ 0418	33	1					WSE use HBZ 0418
Spacer—bracket	27H 4518§	34	1					
Body	†NSP	35	1					
Catch—body	27H 4520§	36	1					Was 27H 4521
Bulb	BFS 162	37	1					

§Parts peculiar to Tractor only

See title-page for application

†Revised Information—Issue 4

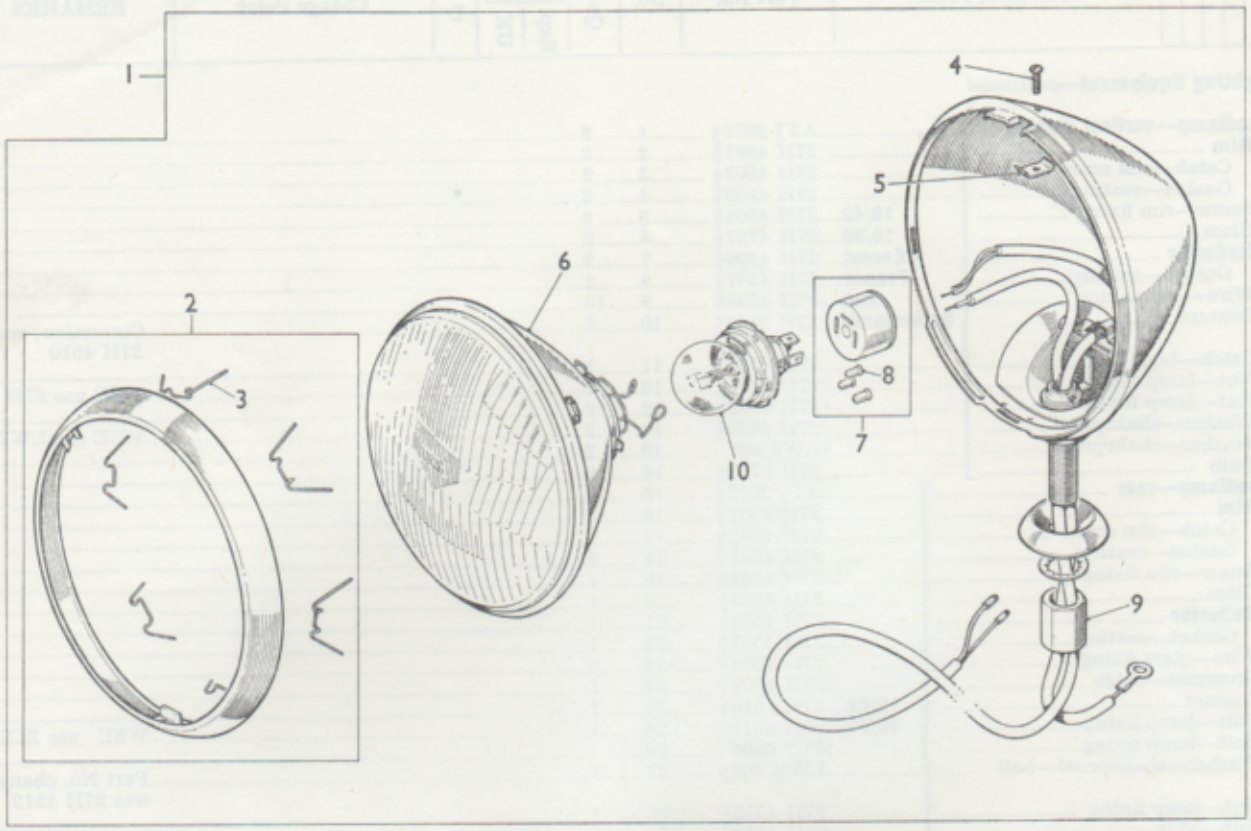
1
2
3
4
5
6
7
8
9
10

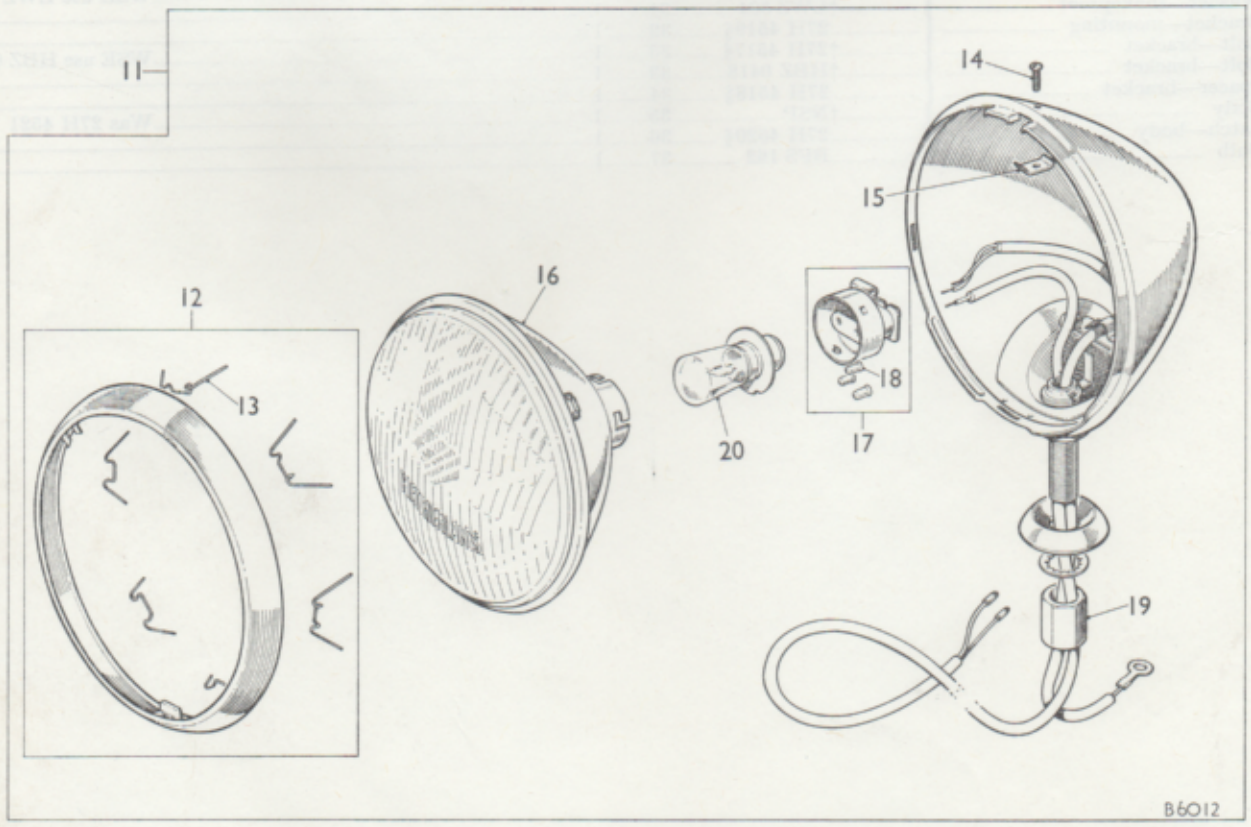
11
12
13
14
15
16
17
18
19
20
B6012

DESCRIPTION	Part No.	Illus. No.	Quantity	Stock recommds. DIST. Exp.	Stock recommds. DIST. UK	Stock recommds. D	Change Point	REMARKS
Lighting Equipment—*continued*								
Headlamp—vertical dipping	ATJ 2087§	1	2					
Rim	17H 5403	2	2					
Wire—light unit fixing	7H 5167	3	12					
Screw—rim fixing	**10/42,** 17H 5400	4	2					
Plate—rim fixing	**10/60,** 17H 5402	5	2					
Light unit	**France** 27H 4146	6	2					
Adaptor	47H 5126	7	2					
Sleeve terminal	37H 5271	8	6					
Nut—bolt	17H 5494	9	2					
Bulb	BFS 411	10	2					
Headlamp—vertical dipping	ATJ 2081§	11	2					
Rim	17H 5403	12	2					
Wire—light unit fixing	7H 5167	13	12					
Screw—rim fixing	**10/42,** 17H 5400	14	2					
Plate—rim fixing	**10/60,** 17H 5402	15	2					
Light unit	**Netherlands** 7H 5485	16	2					
Adaptor	17H 5306	17	2					
Sleeve—terminal	37H 5271	18	6					
Nut—bolt	17H 5494	19	2					
Bulb	BFS 370	20	2					

§ **Parts peculiar to Tractor only**

See title-page for application

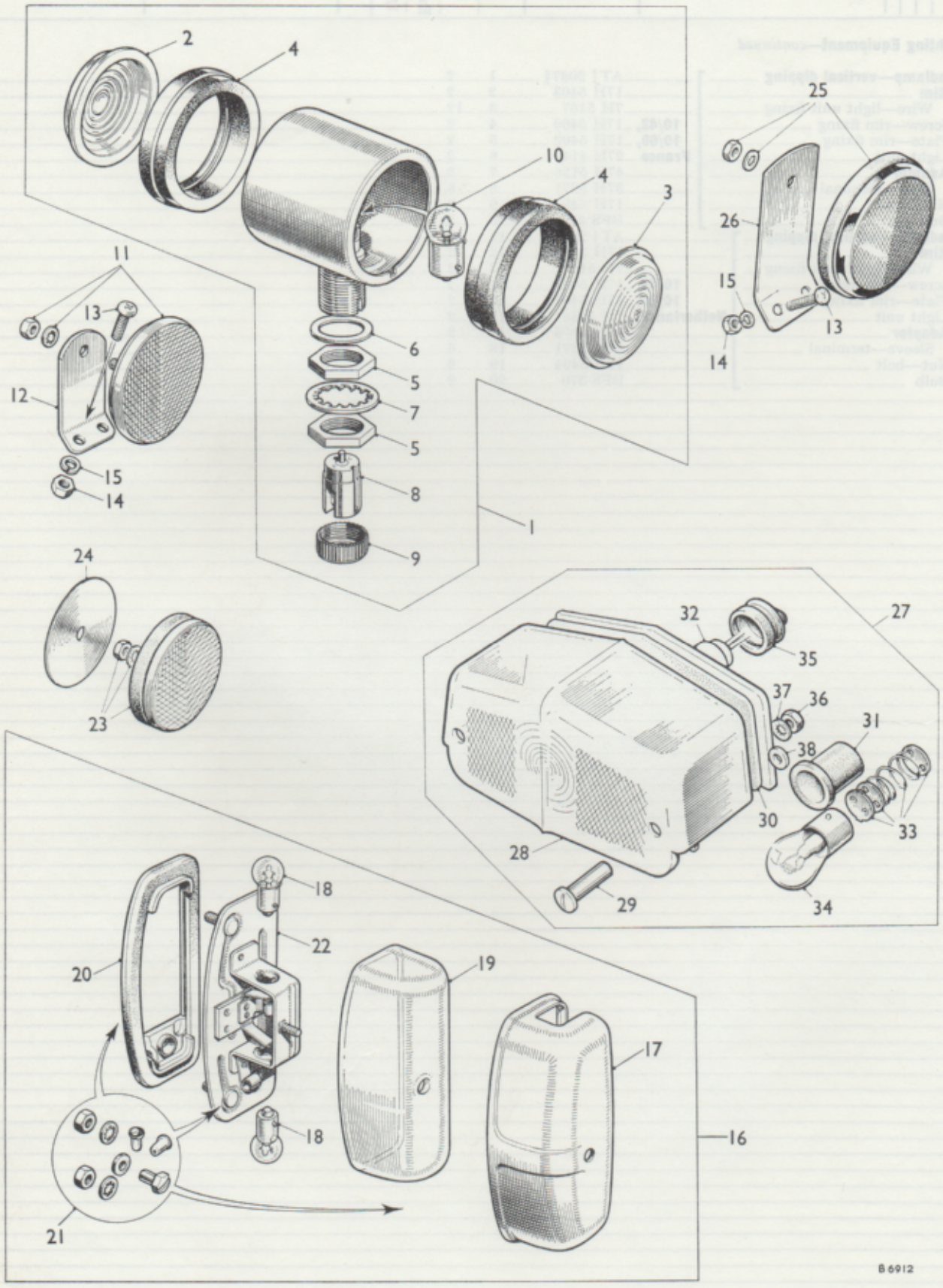
2
4
10
4
3
25
26
15
13
14
11
13
12
15
14
6
5
7
5
8
9
1
24
23
32
35
37
36
31
38
30
33
28
29
34
27
18
22
20
19
17
18
16
21
B 6912

DESCRIPTION		Part No.	Illus. No.	Quantity	Stock recommds. DIST. Exp.	Stock recommds. DIST. UK	Stock recommds. D	Change Point	REMARKS
Lighting Equipment—*continued*									
Side/tail lamp assembly		ATJ 2071§	1	2					
Lens—clear		27H 4779§	2	2					
Lens—red		27H 4780§	3	2					
Mount—lens		27H 4781§	4	4					
Nut—adaptor body		27H 4782§	5	4					
Washer—lock		27H 4783§	6	2					
Washer—shakeproof		27H 4784§	7	2					
Contact		27H 4785§	8	2					
Nut—coupling		27H 4786§	9	2					
Bulb		47H 5122§	10	2	★	★			
Reflector—rear		ATJ 2084§	11	2					Not available; use BMK 699 with 1 off ATJ 8597
Reflector—rear	**Except Sweden and Finland**	†BMK 699	23	2					
Washer—reflector	**10/42, 10/60**	†ATJ 8597	24	2					
Bracket—reflector		ATJ 8551§	12	2					
Screw—bracket		PMZ 0305	13	4					
Nut—screw		FNZ 103	14	4					
Washer—spring—nut		LWZ 203	15	4					
Reflector—rear	**Sweden and Finland only**	†BHA 4148	25	2					
Bracket—reflector		†ATJ 8628	26	2					
Screw—bracket		†PMZ 0306	13	4					
Nut—screw		†FNZ 103	14	4					
Washer—spring—screw		†LWZ 203	15	4					
Lamp—number-plate illumination		BCA 4575	16	1					
Cover		7H 5120	17	1					
Bulb		BFS 989	18	1	★	★			
Lens		57H 5128	19	1					
Gasket—seating		57H 5368	20	1					
Sundry parts		7H 5123	21	1 set					
Base		27H 4625	22	1					
Lamp—number-plate illumination and stop/tail		†ATJ 2088§	27	1					
Lens and window		†27H 6562§	28	1					
Nut—lens fixing		†47H 5531	29	2					
Gasket—lens seating		†27H 6563§	30	1					
Grommet—bulb holder	**South Africa**	†27H 6564§	31	1					
Shell—bulb holder		†27H 6565§	32	1					
Interior—bulb holder	**10/42,**	†37H 5459	33	1					
Bulb	**10/6v**	†BFS 380	34	1					
Grommet—cable entry		†17H 5216	35	1					
Nut—lamp fixing		†2K 4012	36	2					
Washer—shakeproof		†LWN 403	37	2					
Washer—spacer		†17H 5593	38	2					

§ **Parts peculiar to Tractor only** **See title-page for application** **†Revised Information—Issue 3**

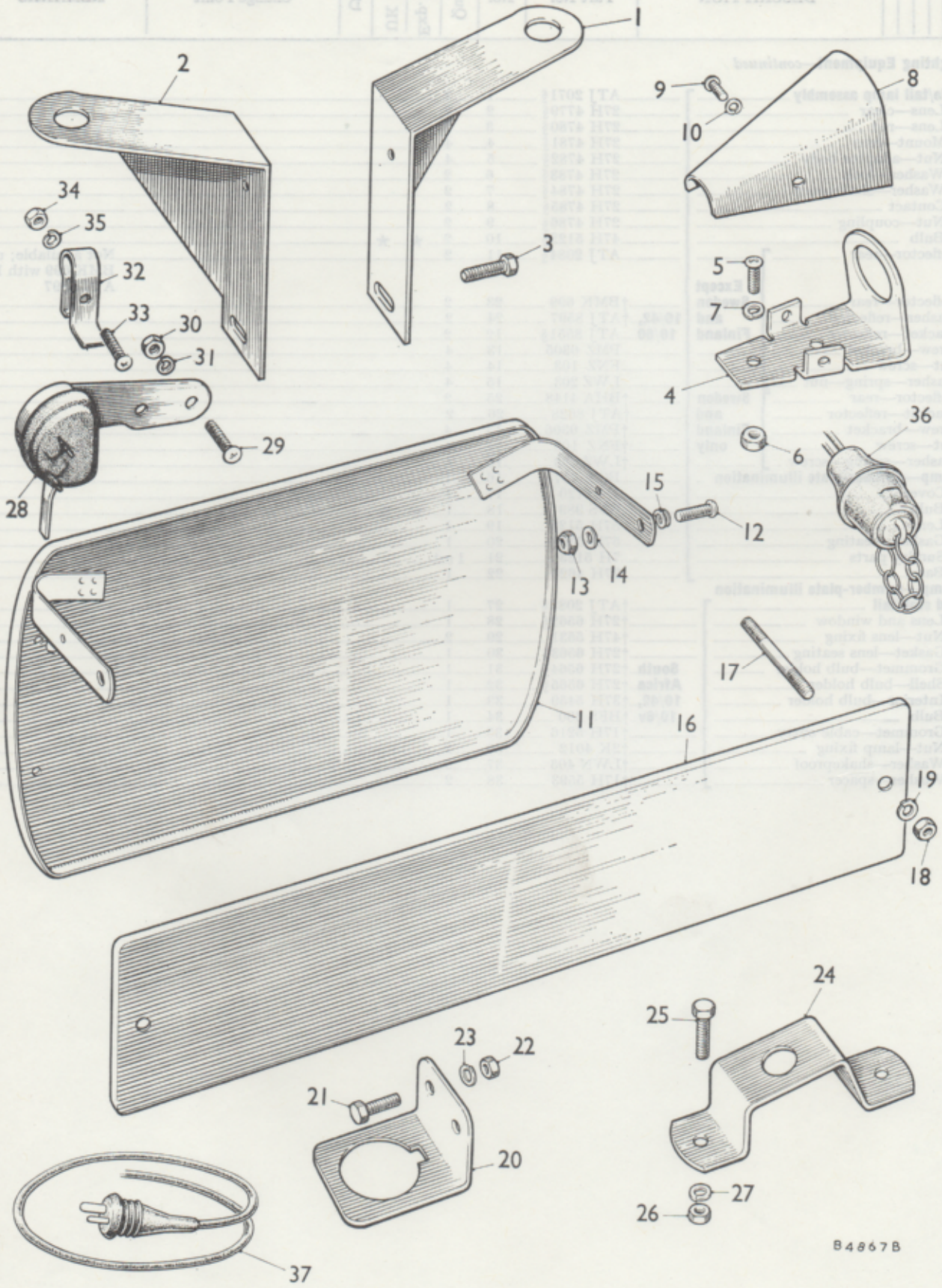
1
2
3
4
5
6
7
8
9
10
11
12
13
14
15
16
17
18
19
20
21
22
23
24
25
26
27
28
29
30
31
32
33
34
35
36
37
B4867B

Lighting Equipment—*continued*

FIXING BRACKETS

		DESCRIPTION	Part No.	Illus. No.	Quantity	Stock recommds. DIST. Exp.	Stock recommds. DIST. UK	Stock recommds. D	Change Point	REMARKS
		Bracket—headlamp—RH	NT 3836§	1	1					
		Bracket—headlamp—LH	NT 4234§	2	1					
		Screw—bracket to radiator case	HNS 0508	3	4					
		Bracket—side/tail lamp	ATJ 8378§	4	2					
		Screw—bracket	PMZ 0408	5	4					
		Nut—screw	FNZ 104	6	4					
		Washer—spring—screw	LWZ 204	7	4					
		Cover—side/tail lamp bracket	ATJ 8379§	8	2					
		Screw—cover	PMZ 0304	9	4					
		Washer—spring—screw	LWZ 203	10	4					
		Number-plate—rear	ATJ 8414§	11	1					
	South Africa	Number-plate—rear	ATJ 8588§	11	1					
		Screw—number-plate to toolbox	PMZ 0412	12	2					
		Nut—screw	LNZ 104	13	2					
		Washer—plain—nut	PWZ 104	14	2					
		Washer—spring—screw	AJD 7722 Z	15	2					
		Number-plate—front	NT 3853§	16	1					
		Stud—number-plate	NT 5757§	17	2					
		Nut—stud	FNZ 105	18	4					
		Washer—spring—nut	**10/42** FNZ 105 **10/60** †LWN 205	19	2					Correction; was LWN 212
		Bracket—trailer lamp socket support	ATJ 8411§	20	1					
		Socket—trailer lamp	†ATJ 8365§	36	1					
		Trailer plug and cable								
		24″ (0·609 m.)	†ATJ 2107§	37	1					
		72″ (1·828 m.)	†ATJ 2109§		1					
		96″ (2·438 m.)	†ATJ 2110§		1					
		120″ (3·048 m.)	†ATJ 2111§		1					
		Screw—bracket to toolbox	HZS 0404	21	2					
		Nut—screw	FNZ 104	22	2					
		Washer—spring—nut	LWZ 204	23	2					
		Bracket—rear floodlamp	ATJ 8536§	24	1					
		Screw—bracket	HZS 0505	25	2					
		Nut—screw	FNZ 105	26	2					
		Washer—spring—nut	LWZ 205	27	2					
		Switch—stop/tail lamp	ATJ 8585§	28	1					
		Screw—switch	PNZ 0316	29	2					
		Nut—screw	ANZ 103	30	2					
	South Africa	Washer—spring—nut	LWZ 203	31	2					
		Arm—actuating	ATJ 8586§	32	1					
		Screw—arm	PNZ 0310	33	1					
		Nut—screw	ANZ 103	34	1					
		Washer—spring—nut	LWZ 203	35	1					

§ **Parts peculiar to Tractor only** **See title-page for application** **†Revised Information—Issue 3**

| | | |

DESCRIPTION	Part No.	Illus. No.	Quantity	Stock recommds. DIST. Exp.	Stock recommds. DIST. UK	Stock recommds. D	Change Point	REMARKS
Lighting Equipment—*continued*								
WIRING, ETC.								
Cables								
Side/tail lamp to junction	ATJ 8564§		1					
Side/tail lamp and floodlamp to junction	ATJ 8566§		1					
Side/tail lamp junction and side/tail/floodlamp junction to switch	ATJ 8567§		1					
Side/tail lamp junction to number-plate lamp junction	**10/60** ATJ 8569§		1					
Number-plate lamp to junction	ATJ 8570§		1					
Side/tail and stop lamp switch junction and side/tail ploughlamp junction to switch	†ATJ 8593§		1					South African requirements
Stop lamp switch and side/tail lamp junction to stop/tail and number plate illumination lamp	†ATJ 8592§		1					South African requirements
Cables								
Side/tail lamp to junction	ATJ 8563§		1					
Side/tail lamp and floodlamp to junction	ATJ 8565§		1					
Side/tail lamp junction and side/tail/floodlamp junction to switch	ATJ 8567§		1					
Side/tail lamp junction to number-plate lamp junction	**10/42** ATJ 8569§		1					
Number-plate lamp to junction	ATJ 8570§		1					
Side/tail and stop lamp switch junction and side/tail ploughlamp junction to switch	†ATJ 8593§		1					South African requirements
Stop lamp switch and side/tail lamp junction to stop/tail and number plate illumination lamp	†ATJ 8592§		1					South African requirements
Clips—cable								
Headlamp to front engine bearer	11K 9243		1					
Brake pedal support bracket	11K 9243		6					
Dual gauge, headlamp and dynamo to engine side cover	**10/60** ATJ 8562§		2					
Dual gauge, headlamp and dynamo to engine side cover	**10/42** ATJ 8562§		1					
Side/tail lamp to mudguard	**10/60** CHR 0407		3					
Side/tail lamp to mudguard	**10/42** CHR 0407		5					
Side/tail/floodlamp to mudguard	ATJ 8574§		1					
Earth return to toolbox	3H 2361		1					
Number-plate to pivot pin	PCR 0307		2					Part No. change; was ATJ 8419
Switch to gearbox top cover	NT 3943§		2					
Switch to gearbox top cover	ATJ 8573§		1					
Switch and number-plate to axle case	ATJ 8594§		3					Part No. change; was ATJ 8575
Headlamp bracket and frame	PCR 0411		6					
Junction to illumination lamp on gearbox	ATJ 8576§		1					
Junction to illumination lamp on axle case	ATJ 8627§		3					Part No. change; was ATJ 8584

§ **Parts peculiar to Tractor only** **See title-page for application** **†Revised Information—Issue 2**

			DESCRIPTION	Part No.	Illus. No.	Quantity	Stock recommds. DIST.	Stock recommds. D	Change Point	REMARKS
Lighting Equipment—continued										
			WIRING, ETC.							
Cables										
			Side/tail lamp to junction	AT] 8504‡		1				
			Side/tail lamp and floodlamp to junction	AT] 8505‡		1				
			Side/tail lamp junction and side/tail/floodlamp junction to switch	AT] 8507‡		1				
			Side/tail lamp junction to number-plate lamp junction	10/60 AT] 8508‡		1				
			Number-plate lamp to junction	AT] 8470‡		1				
			Side tail and stop lamp switch junction and side/tail/floodlamp junction to switch	†AT] 8509‡		1				South African requirements
			stop lamp switch and side/tail lamp junction to stop/tail and number plate illumination lamp	†AT] 8502‡		1				
Cables										
			Side/tail lamp to junction	AT] 8503‡		1				
			Side/tail lamp and floodlamp to junction	AT] 8506‡		1				
			Side/tail lamp junction and side/tail/floodlamp junction to switch	AT] 8507‡		1				
			Side/tail lamp junction to number-plate lamp junction	10/42 AT] 8508‡		1				
			Number-plate lamp to junction	AT] 8470‡		1				
			Side tail and stop lamp switch junction and side/tail/floodlamp junction to switch	†AT] 8509‡		1				South African requirements
			stop lamp switch and side/tail lamp junction to stop/tail and number plate illumination lamp	†AT] 8502‡		1				
Clips—cable										
			Headlamp to front engine bearer	11K 9243		1				
			Brake pedal support bracket	11K 9243		6				
			Dual gauge, headlamp and dynamo to engine side cover	10/80 AT] 8502‡		2				
			Dual gauge, headlamp and dynamo to engine side cover	10/42 AT] 8502‡		1				
			Side/tail lamp to mudguard	10/50 CHR 0407		3				
			Side/tail lamp to mudguard	10/42 CHR 0407		6				
			Side/tail floodlamp to mudguard	AT] 8474‡		1				
			Earth return to toolbox	2H 7081		1				
			Number-plate to pivot pin	1CK 0507		2				Part No. change; was AT] 8419
			Switch to gearbox top cover	NT 3043‡		2				
			Switch to gearbox top cover	AT] 8473‡		1				
			Switch and number-plate to axle case	AT] 8504‡		2				Part No. change; was AT] 8378
			Headlamp bracket and frame	FCR 0411		6				
			Junction to illumination lamp on gearbox	AT] 8476‡		1				
			Junction to illumination lamp on axle case	AT] 8027‡		3				Part No. change; was AT] 8384

‡ Parts peculiar to Tractor only — See title-page for application — †Revised information—Issue 2

DESCRIPTION	Part No.	Illus. No.	Quantity	Stock recommds. DIST. Exp.	Stock recommds. DIST. UK	Stock recommds. D	Change Point	REMARKS
Lighting Equipment—*continued*								
Wiring, etc.—*continued*								
Grommet—mudguard	RFN 403		2					
Screw—clip to mudguard	PMZ 0305		4					
Nut—screw	**10/60** FNZ 103		4					
Washer—spring—nut	LWZ 203		4					
Screw—clip to mudguard	PMZ 0305		5					
Nut—screw	**10/42** FNZ 103		5					
Washer—spring—nut	LWZ 203		5					
Screw—clip to toolbox	PMZ 0305		1					
Nut—screw	FNZ 103		1					
Washer—spring—nut	**10/60** LWZ 203		1					
Screw—clip to pivot bracket	**10/42** PMZ 0306		2					
Nut—screw	FNZ 103		2					
Washer—spring—nut	LWZ 203		2					

§ **Parts peculiar to Tractor only** **See title-page for application**

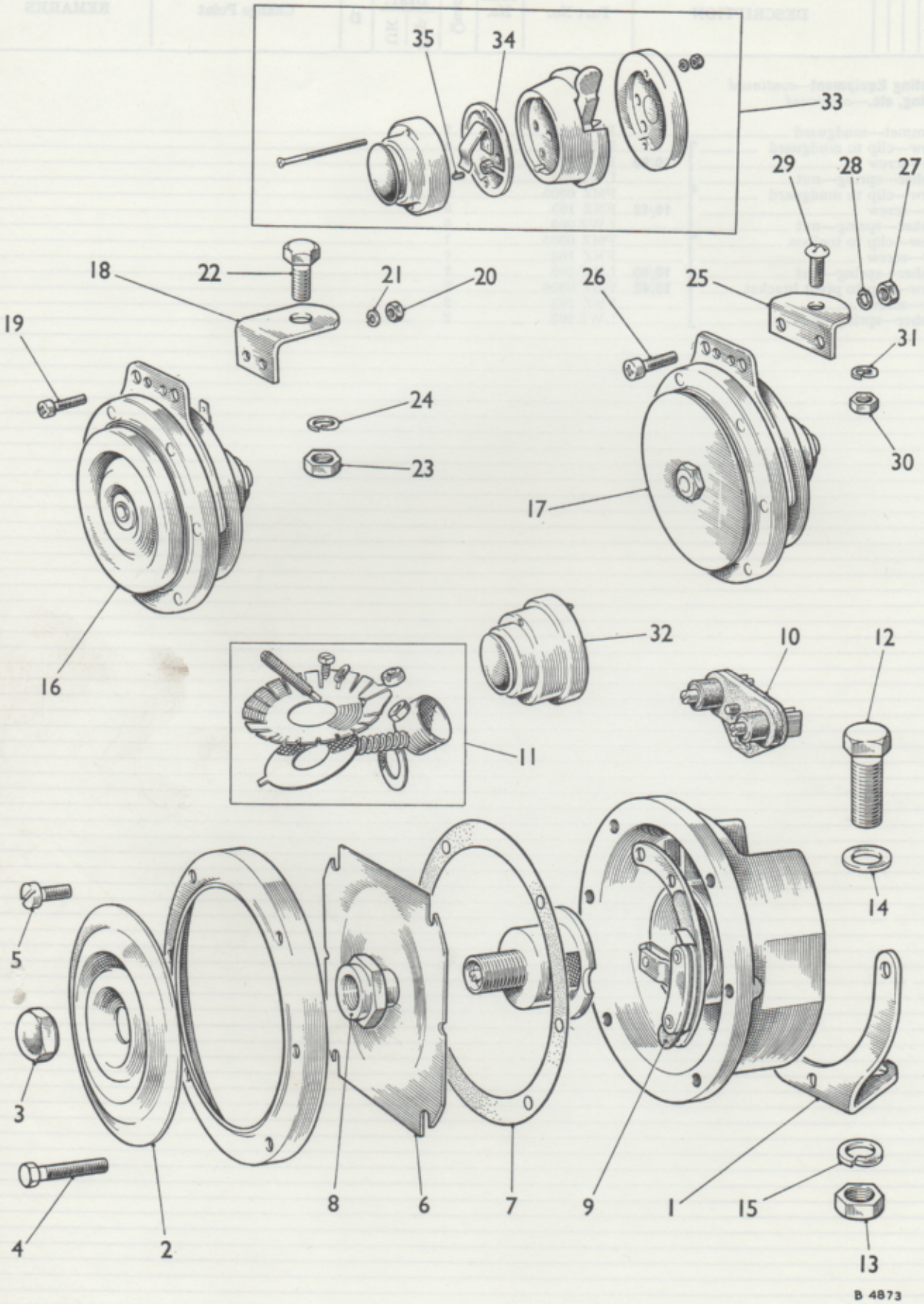

To face page MR 55

DESCRIPTION	Part No.	Illus. No.	Quantity	Stock recommds. DIST. Exp.	Stock recommds. DIST. UK	Stock recommds. D	Change Point	REMARKS
HORN								
Horn	NT 3667§		1					Not available; use BHA 4186
Bracket—horn	27H 5169	1	1					
Tone—disc	37H 5116§	2	1					
Nut—tone disc	37H 5004§	3	1					
Screw—cover and bracket fixing	17H 5595	4	2					Not available; use AJD 3408 N
Screw—cover and bracket fixing	AJD 3408 N	4	2					
Screw—cover fixing	17H 5596§	5	4					
Diaphragm	**4DM** 17H 5491	6	1				DE1001 on	
Washer—packing—diaphragm	37H 5108§	7	1				IDE10388 on	
Nut—diaphragm fixing	37H 5007§	8	1					
Contacts	17H 5048	9	1 set					
Terminal	37H 5109§	10	1					
Sundry parts	17H 5490	11	1 set					
Screw—horn to battery tray	HNS 0608	12	1					
Nut—screw	FNZ 106	13	1					
Washer—plain—screw	PWZ 106	14	1					
Washer—spring—nut	LWZ 206	15	1					
Horn	**3DL, 4DM, 342, 460** 13H 69		1				4DM–787–501 on	Part No. change;
							792–501 on	was NT 8361
							3DL–771–501 on	Not available;
							772–501 on	use BHA 4186
	BHA 4186	16	1				342–24000 to 27232	
							460–24000 to 27232	
	342, 460, 10/42, 10/60 ATJ 8477§	17	1				342–27233 on	
							460–27233 on	
							10/42–27233 on	
							10/60–27233 on	
Bracket—horn	ATJ 8259§	18	1				4DM–787–501 on	
Screw—horn to bracket	**3DL,** PMZ 0308	19	2				792–501 on	
Nut—screw	**4DM,** FNZ 103	20	2				3DL–771–501 on	
Washer—spring—screw	**342,** LWZ 203	21	2				772–501 on	
Screw—horn to battery tray	**460** HNZ 0606	22	1				342–24000 on	
Nut—screw	FNZ 106	23	1				460–24000 on	
Washer—spring—screw	LWZ 206	24	1					
Bracket—horn	ATJ 8556§	25	1					
Screw—horn to bracket	PMZ 0408	26	2					
Nut—screw	**10/42,** FNZ 104	27	2					
Washer—spring—screw	**10/60** LWZ 204	28	2				57420 on	
Screw—horn to battery tray	PMZ 0408	29	1					
Nut—screw	FNZ 104	30	1					
Washer—spring—screw	LWZ 204	31	1					
Horn push	47H 5598	32	1					Part No. change; was NT 1580
Horn push and dip switch	**3DL, 4DM,** NT 6451§	33	1					Not available; use 27H 5106
Horn push and dip switch	**342,** 27H 5106	33	1					
Contact mount	**460** 37H 5051	34	1					
Screw—terminal	17H 5589	35	4					

§ **Parts peculiar to Tractor only**

See title-page for application

	DESCRIPTION	Part No.	Illus. No.	Quantity	Stock recommends. DIST. UK / Eqv	Stock recommends. DIST. D	Change Point	REMARKS
	HORN							
	Horn	NT 3807½		1				Not available; use HIA 4180
	Bracket—horn	3TH 6180		1				
	Tone—disc	3TH 8118½		3				
	Nut—tone disc	3TH 8006½		3				
	Screw—cover and bracket fixing	1TH 6380		4				Not available; use AJD 3408 N
	Screw—cover and bracket fixing	AJD 2408 N		4				
	Screw—cover fixing	1TH 8308½		4				
	Diaphragm	4DM 1TH 6491		6				DE1001 on
	Washer—packing—diaphragm	3TH 8108½		7				DE10388 on
	Nut—diaphragm fixing	3TH 8007½		8				
	Contacts	1TH 3048		9		1 set		
	Terminal	3TH 8109½		10		1		
	Sundry parts	1TH 8420		11		1 set		
	Screw—horn to battery tray	HNS 0608		12		1		
	Nut—screw	PNZ 106		13		1		
	Washer—plain—screw	PWZ 108		14		1		
	Washer—spring—nut	LWZ 206		15		1		
	Horn	2DL, 4DM, 342, 460 1HA 1180		16		1		4DM-787-501 on: Part No. change; 702-501 on was NT 8301; 3DL-771-501 on Not available; 775-501 on use HIA 4180
	342, 460, 10, 42, 10/20	AJ1 8417½		17		1		342-24000 to 27232; 460-24000 to 27232; 342-27232 on; 460-27232 on; 10/42-27232 on; 10/20-27232 on; 4DM-787-501 on; 702-501 on; 3DL-771-501 on; 775-501 on; 342-24000 on; 460-24000 on; 574420 on
	Bracket—horn	AJ1 8520½		18		1		
	Screw—horn to bracket	PNZ 0608		19		2		
	Nut—screw	PNZ 106		20		2		
	Washer—spring—screw	LWZ 208		21		2		
	Screw—horn to battery tray	HNZ 0808		22		1		
	Nut—screw	PNZ 108		23		1		
	Washer—spring—screw	LWZ 208		24		1		
	Bracket—horn	AJ1 8520½		25		1		
	Screw—horn to bracket	PNZ 0608		26		2		
	Nut—screw	PNZ 104		27		2		
	Washer—spring—screw	LWZ 204		28		2		
	Screw—horn to battery tray	PNZ 0608		29		1		
	Nut—screw	PNZ 104		30		1		
	Washer—spring—screw	LWZ 204		31		1		
	Horn push	4TH 8508		32		1		
	Horn push and clip switch	2DL, 4DM, 342, 460 NT 6140½		33		1		Part No. change; was NT 1880 Not available; use 2TH 3108
	Horn push and clip switch	342, 460 3TH 8108		33		1		
	Contact mount	3TH 8007		34		1		
	Screw—terminal	1TH 8380		35		4		

TACHOMETER – †TRACTOMETER

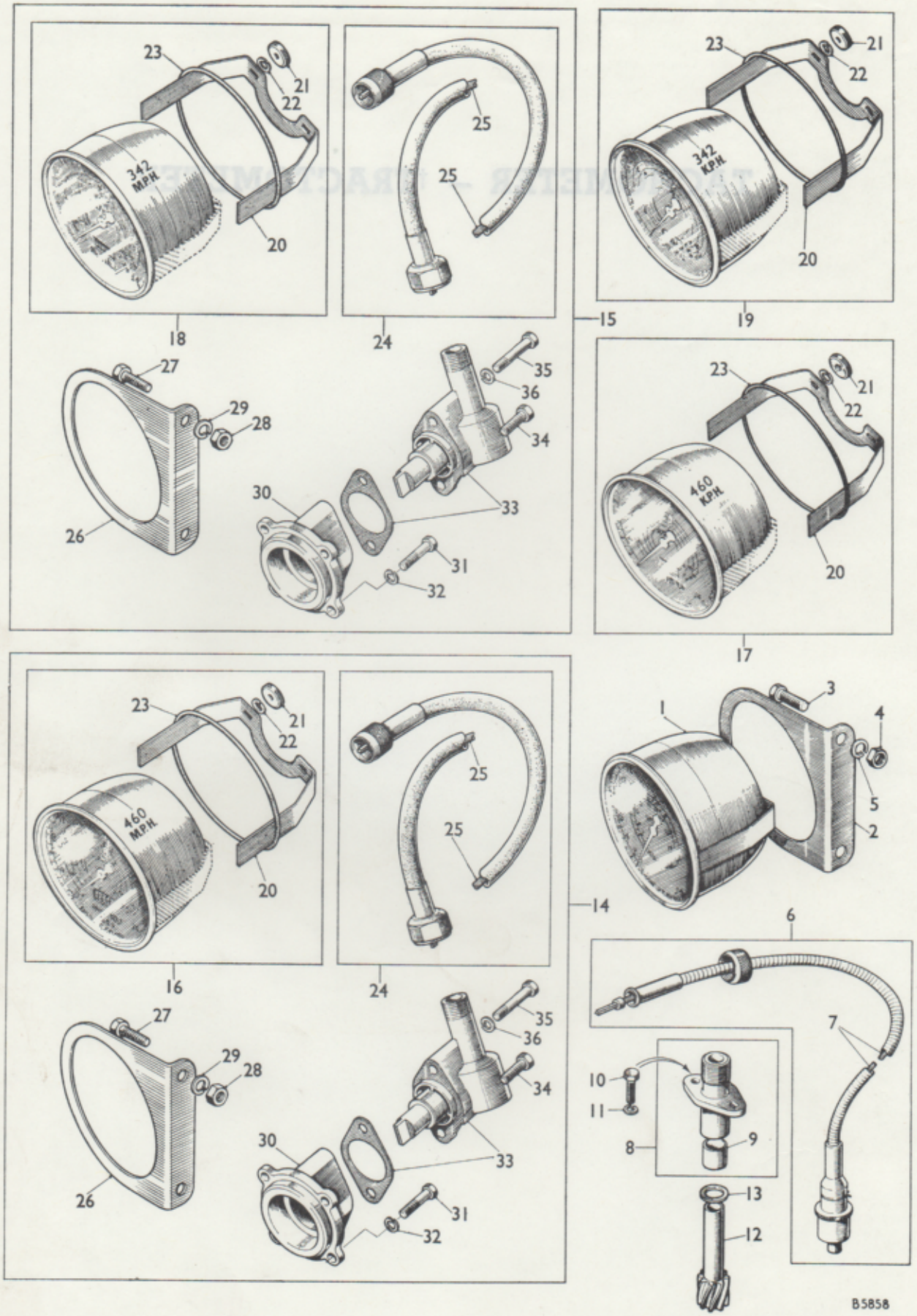
23
21
22
342 MPH
20
18
25
25
24
15
23
21
22
342 KPH
20
19
27
29
28
26
35
36
34
30
33
31
32
23
21
22
460 KPH
20
17
23
21
22
460 MPH
20
16
25
25
24
14
1
3
4
5
2
6
7
27
29
28
26
35
36
34
30
33
31
32
10
11
8
9
13
12
B5858

TACHOMETER—TRACTOMETER

Note: Commencing models 10/42 and 10/60 tractometers are fitted as standard equipment For details see page ML 4.

DESCRIPTION		Part No.	Illus. No.	Quantity	Stock recommds. DIST. Exp.	Stock recommds. DIST. UK	Stock recommds. D	Change Point	REMARKS
Head—tachometer		NT 7011§		1					Not available; use 27H 2129
Head—tachometer		27H 2129§	1	1					
Bracket—tachometer		NT 7013§	2	1					
Screw—bracket to LH side panel		HNS 0505	3	2					
Nut—screw		FNN 105	4	2					
Washer—spring—nut		LWN 205	5	2					
Cable—tachometer drive		NT 7012§		1					Not available; use 17H 1790
Cable—inner		37H 569		1				DE1001 to 10387	
Cable—tachometer drive	**4DM**	17H 1790	6	1				IDE10388 to 18115	
Cable—inner		27H 39	7	1					
Bearing—tachometer gear		ATJ 61§	8	1					Part No. change; was NT 7007
Bush		LBS 0708	9	1					
Screw—bearing housing to hour meter housing		HNS 0405	10	2					
Washer—spring—screw		LWN 204	11	2					
Gear—driven		ATJ 65	12	1					Part No. change; was NT 7009
Washer—thrust		ATJ 63§	13	1					Part No. change; was NT 7010
Kit—tractometer and drive—(MPH) 460		†ATJ 9504§	14	1				460–26929 on	
Kit—tractometer and drive—(MPH) 342		†ATJ 9505§	15	1				342–29555 on	
Head—tractometer									
MPH	**4DM**	NT 8391§		1				787–501 to 4908 (less 4289 to 4500)	Not available; use ATJ 8484
								792–501 to 2430 (less 1698 to 2100)	
MPH	**3DL**	NT 8386§		1				771–501 to 3150 (less 3121)	Not available; use ATJ 8482
								772–501 to 971	
MPH	**4DM, 460**	ATJ 8288§		1				4DM–787–4909 on (plus 4289 to 4500)	Not available; use ATJ 8484
KPH	**4DM, 460**	ATJ 8289§		1				792–2431 on (plus 1698 to 2100)	Not available; use ATJ 8485
								460–24000 to 26928	
MPH	**3DL, 342**	ATJ 8290§		1				3DL–771–3151 on (plus 3121)	Not available; use ATJ 8482
KPH	**3DL, 342**	ATJ 8291§		1				772–972 on	Not available;
								342–24000 to 29554	use ATJ 8483
MPH	**460**	ATJ 8473§		1					Not available;
KPH	**460**	ATJ 8474§		1				26929 to 35949	use ATJ 8484
									Not available; use ATJ 8485
MPH	**342**	ATJ 8471§		1					Not available;
KPH	**342**	ATJ 8472§		1				29555 to 37452	use ATJ 8482
									Not available; use ATJ 8483
MPH	**460**	†ATJ 8484§	16	1				35950 on	
KPH	**460**	†ATJ 8485§	17	1					
MPH	**342**	†ATJ 8482§	18	1				37453 on	
KPH	**342**	†ATJ 8483§	19	1					

§ **Parts peculiar to Tractor only** **See title-page for application** **†Revised Information**

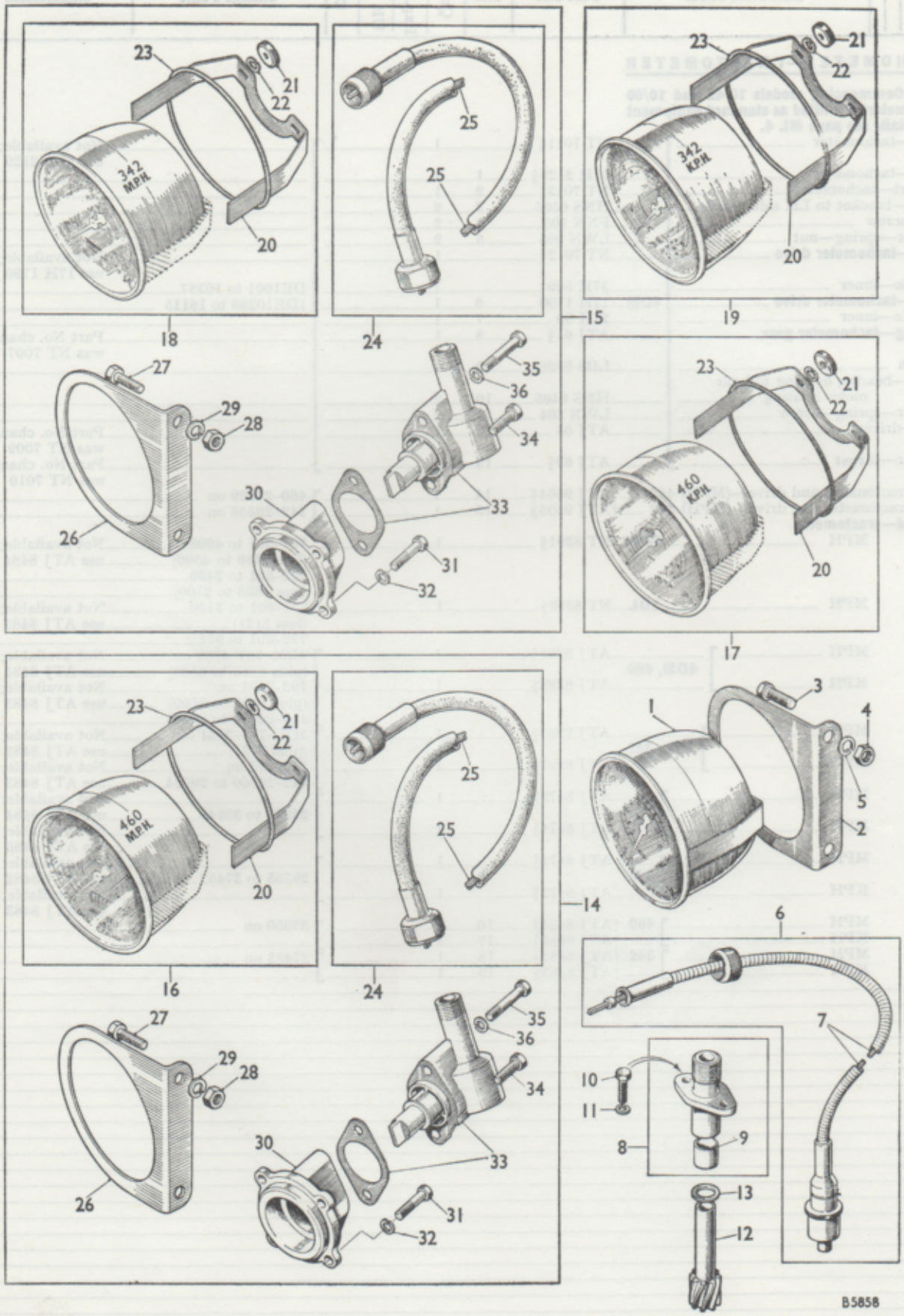
23
21
22
342 MPH
20
18
25
25
24
15
23
21
22
342 KPH
20
19
27
29
28
26
35
36
34
33
30
31
32
23
21
22
460 KPH
20
17
23
21
22
460 MPH
20
16
25
25
24
14
1
3
4
5
2
6
7
27
29
28
26
35
36
34
33
30
31
32
10
11
8
9
13
12
B5858

	DESCRIPTION	Part No.	Illus. No.	Quantity	Stock recommds. DIST. Exp.	Stock recommds. DIST. UK	Stock recommds. D	Change Point	REMARKS
Tachometer—Tractometer—*continued*									
	Strap—tractometer fixing	†27H 990	20	1				4DM–787–4909 on	
	Nut—knurled	†17H 1304	21	2				(plus 4289 to 4500)	
	Washer—spring—nut	27H 387		2				792–2431 on	Not available;
								(plus 1698 to 2100)	use LWZ 304
	Washer—spring—nut	†LWZ 304	22	2				3DL–771–3151 on	
								(plus 3121)	
								772–972 on	
								342–24000 on	
								460–24000 on	
	Ring—tractometer head (rubber)	†27H 1146	23	1				4DM–787–4909 on	
								(plus 4289 to 4500)	
								792–2431 on	
								(plus 1698 to 2100)	
								3DL–771–3151 on	
								(plus 3121)	
								772–972 on	
								460–24000 to 26928	
								342–24000 to 29554	
	Ring—tractometer head (rubber)	†17H 2105	23	1				460–26929 on	
								342–29555 on	
4DM	**Cable—tractometer drive**	†NT 8390§	24	1					
460	Cable—inner	†27H 1996§	25	1					
3DL	**Cable—tractometer drive**	†NT 8375§	24	1					
342	Cable—inner	†37H 570§	25	1					
	Bracket—tractometer head	†NT 7013§	26	1				4DM–787–501 on	
	Screw—bracket to LH side panel	†HNS 0505	27	2				792–501 on	
	Nut—screw	†FNN 105	28	2				3DL–771–501 on	
	Washer—spring—nut	†LWN 205	29					772–501 on	
	Bracket adaptor	†NT 8374§	30	1				342–24000 on	
	Screw—bracket to timing case	†HNS 0407	31	4				460–24000 on	
	Washer—spring—screw	†LWN 204	32	4					
	Unit—angle drive	†NT 8373§	33	1					
	Screw—drive unit to adaptor bracket	†HNS 0406	34	1					
	Bolt—drive unit to adaptor bracket	†HBN 0412	35	1					
	Washer—spring—screw and bolt	†LWN 204	36	2					

§ **Parts peculiar to Tractor only** **See title-page for application** † **Revised Information—Issue 2**

		DESCRIPTION	Part No.	Illus. No.	Quantity	Stock recommds. DIST.		D	Change Point	REMARKS
						Sub	NO			
		Tachometer—Tractomaster—continued								
		Strap—tractometer fixing	†2TH 020	20	1				41M-787-1009 on	
		Nut—knurled	†1TH 1204	21	2				(plus 4259 to 4400)	
		Washer—spring—out	2TH 287		2				782-2431 on	Not available;
		Washer—spring—out	2LWZ 304	22	2				(plus 1099 to 2100)	use LWZ 304
									31M-771-3101 on	
									(plus 3131)	
									772-972 on	
									340-24000 on	
									480-24000 on	
		Ring—tractometer head (rubber)	†2TH 1194	23	1				41M-787-1009 on	
									(plus 4259 to 4400)	
									782-2431 on	
									(plus 1099 to 2100)	
									31M-771-3101 on	
									(plus 3131)	
									772-972 on	
									480-24000 to 27213	
									340-24000 to 27134	
		Ring—tractometer head (rubber)	†1TH 2102	23	1				480-27213 on	
									340-27135 on	
		Bolt—tractometer drive	4DM †NT 20091	24	1					
		Cable—inner	4DM †2TH 10084	25	1					
		Bolt—tractometer drive	3DL †NT 20121	24	1					
		Cable—inner	3DL †2TH 2701	25	1					
		Bracket—tractometer head	†NT 70131	26	1					
		Screw—bracket to LH side panel	†1TN 0606	27	2					
		Nut—screw	†2TN 103	28	2					
		Washer—spring—out	2LWZ 305	29	2					
		Bracket adaptor	†NT 67141	30	1					
		Screw—bracket to timing case	†1TN 0607	31	4					
		Washer—spring—screw	4LWZ 304	32	4					
		Bolt—angle drive	†NT 82131	33	1					
		Screw—drive unit to adaptor bracket	†1TN 0606	34	1					
		Bolt—drive unit to adaptor bracket	†1TN 0112	35	1					
		Washer—spring—screw and bolt	1LWZ 304	36	2					

† Parts peculiar to Tractor only — See title-page for explanation — † Revised information—Issue 2

RADIUS ARMS

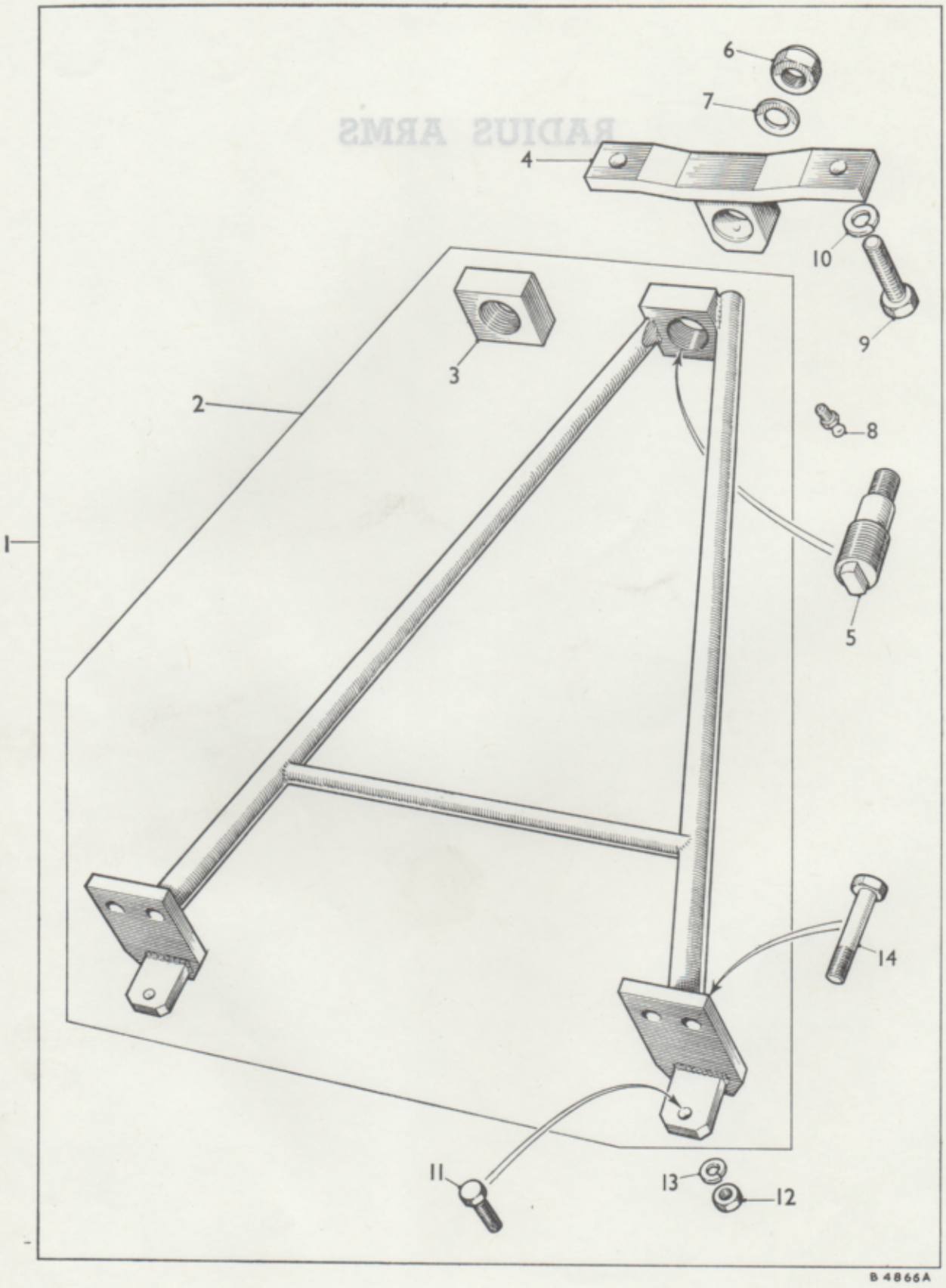
6
7
4
10
9
3
2
8
1
5
14
11
13
12
B 4866A

DESCRIPTION	Part No.	Illus. No.	Quantity	Stock recommds. DIST. Exp. / UK	Stock recommds. DIST. D	Change Point	REMARKS
RADIUS ARMS							
Kit—radius arm **10/60, 460**	†ATJ 9486§	1	1				
Kit—radius arm **10/42, 342**	†ATJ 9487§	1	1				
Arm—radius **10/60, 460**	†ATJ 4133§	2	1				
Arm—radius **10/42, 342**	†ATJ 4138§	2	1				
Block—trunnion	†ATJ 9523§	3	1				
Bracket—pivot **10/60, 460**	†ATJ 4134§	4	1				
Bracket—pivot **10/42, 342**	†ATJ 4139§	4	1				
Pin—pivot—radius arm to bracket	†ATJ 4135§	5	1				
Nut—pivot pin	†LNN 212	6	1				
Washer—plain—nut	†PWN 112	7	1				
Greaser—pivot pin	†UHN 105	8	1				
Screw—pivot bracket to frame	†HNS 1216	9	2				
Washer—spring—screw	†LWN 212	10	2				
Screw—radius arm to front axle beam **10/60, 460**	†HNS 0710	11	2				
Screw—radius arm to front axle beam **10/42, 342**	†HNS 0707	11	2				
Nut—screw	†FNN 107	12	2				
Washer—spring—nut	†LWN 207	13	2				
Bolt—extending beam and radius arm to front axle beam	†HBN 1236	14	2				

§ **Parts peculiar to Tractor only** **See title-page for application** † **Revised Information**

DESCRIPTION	Part No.	Illus. No.	Quantity	Stock recommds. DIST. Eng.	Stock recommds. DIST. AK	Stock recommds. D	Change Point	REMARKS
RADIUS ARMS								
Kit—radius arm	10 60, 460 †AT 9486‡	1	1					
Kit—radius arm	10 42, 342 †AT 9487‡	1	1					
Arm—radius	10 60, 460 †AT 4123‡	2	1					
Arm—radius	10 42, 342 †AT 4128‡	2	1					
Block—trunnion	†AT 9223‡	3	1					
Bracket—pivot	10 60, 460 †AT 4134‡	4	1					
Bracket—pivot	10 42, 342 †AT 4139‡	4	1					
Pin—pivot—radius arm to bracket	†AT 4135‡	5	1					
Nut—pivot pin	†LNN 212	6	1					
Washer—plain—nut	†PWN 112	7	1					
Grease—pivot pin	†GHN 105	8	1					
Screw—pivot bracket to frame	†HNS 1216	9	2					
Washer—spring—screw	†LWN 212	10	2					
Screw—radius arm to front axle beam 10 60, 460	†HNS 0710	11	2					
Screw—radius arm to front axle beam 10 42, 342	†HNS 0707	11	2					
Nut—screw	†FNN 107	12	2					
Washer—spring—nut	†LWN 207	13	2					
Bolt—extending beam and radius arm to front axle beam	†HBN 1236	14	2					

‡ Parts peculiar to Tractor only — See title-page for application — † Revised information

DIFFERENTIAL LOCK

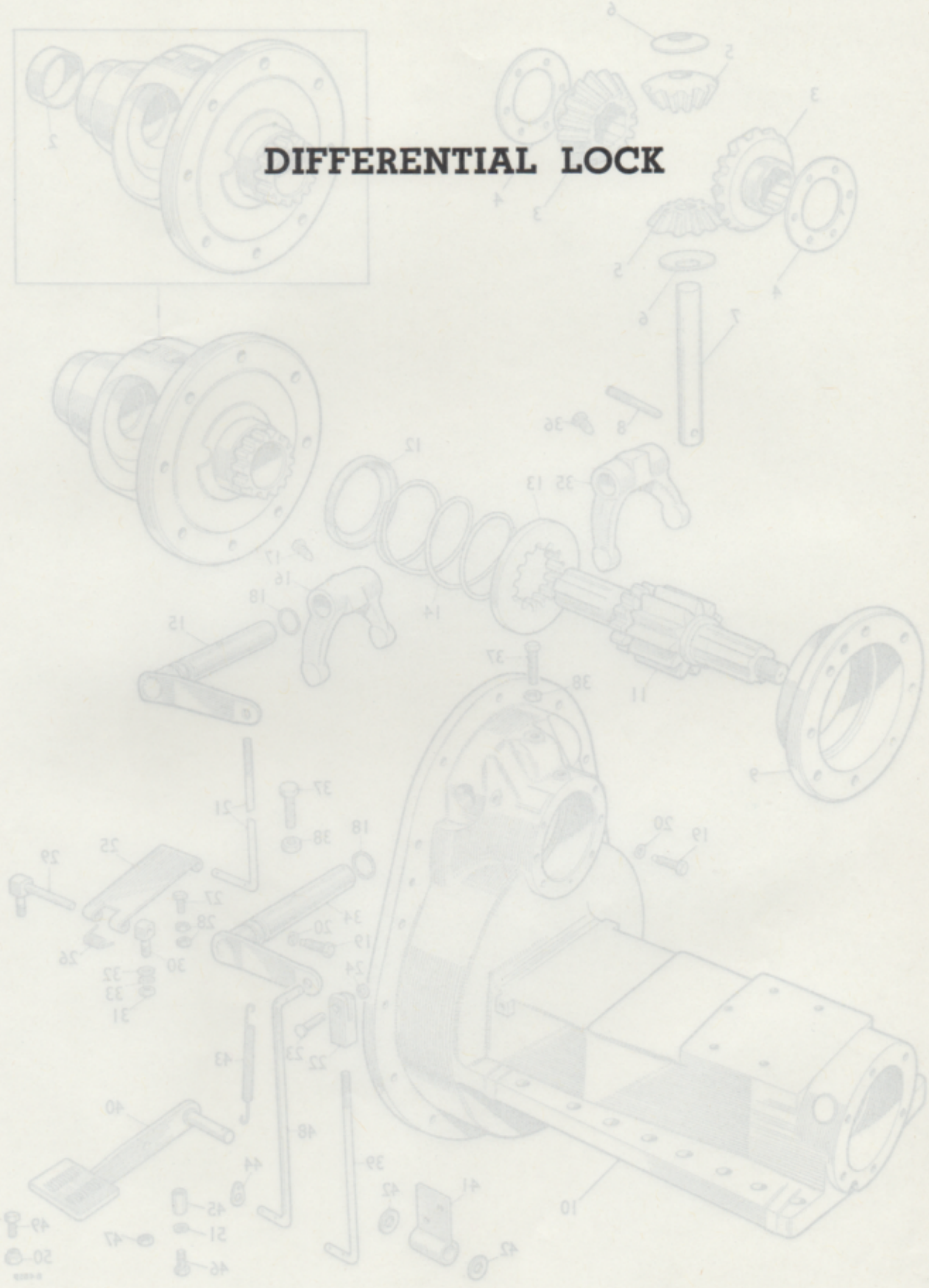

† Revised Information—Issue 2

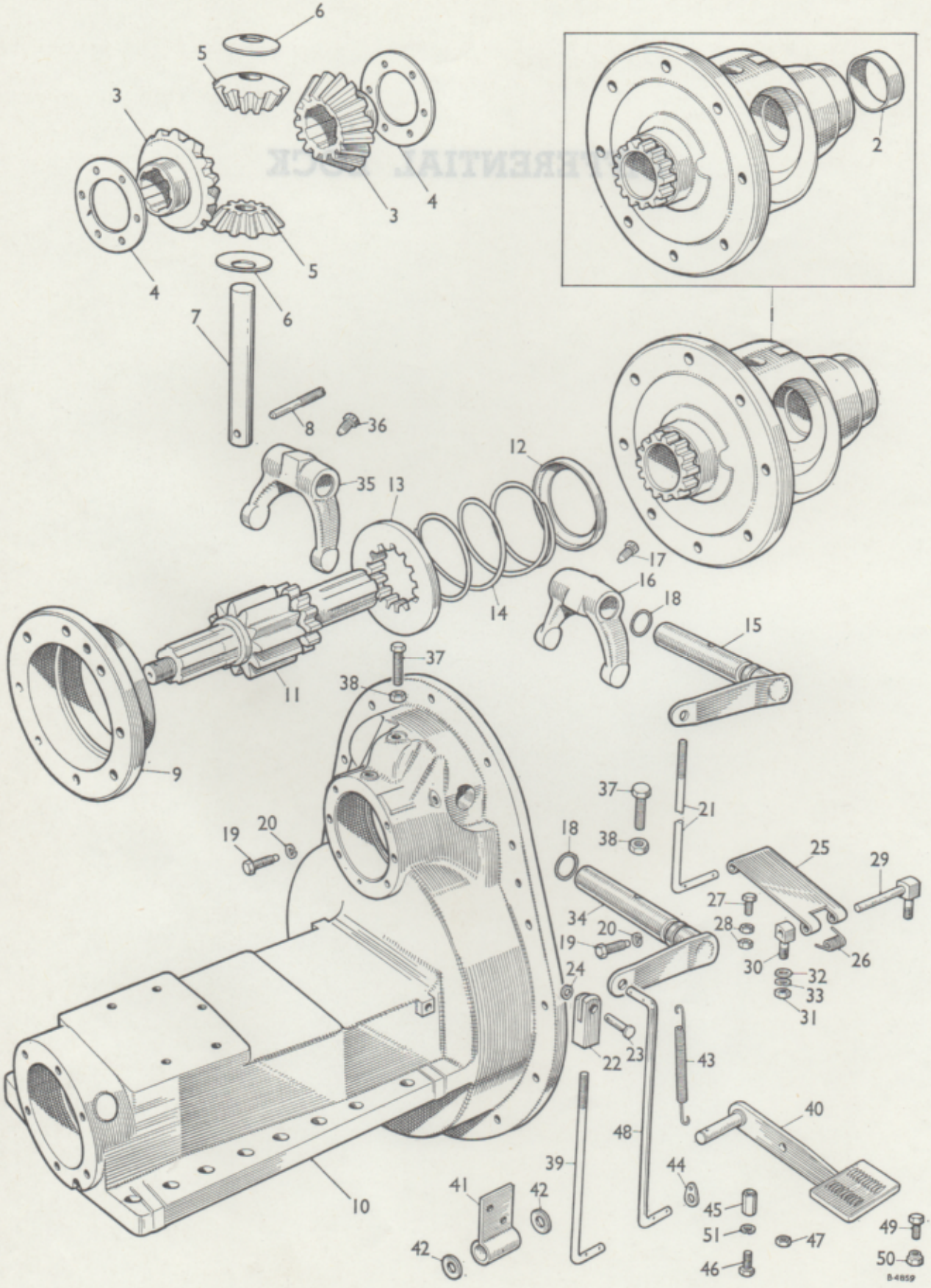
6
5
3
3
4
4
5
6
7
8
36
35
13
12
14
11
9
37
38
19
20
2
1
17
16
18
15
37
21
18
38
25
29
27
28
34
20
19
24
30
26
32
33
31
22
23
43
40
48
39
44
41
42
10
45
51
47
49
50
46
42
B-4859

DIFFERENTIAL LOCK

Note: Commencing tractor No. 38250 differential lock is fitted as standard equipment on both models 460 and 342. For details see section MF.

DESCRIPTION	Part No.	Illus. No.	Quantity	Stock recommds. DIST. Exp.	Stock recommds. DIST. UK	Stock recommds. D	Change Point	REMARKS
Differential assembly	ATJ 7182§		1					WSE use component parts
Housing—differential	ATJ 7183§	1	1					
Bush	NT 4694§	2	2					
Gear—differential	NT 1154§	3	2					
Washer—thrust—gear	NT 3077§	4	2					
Pinion—differential	†NT 5144§	5	2					WSE use ATJ 7803 with 1 off ATJ 7776
Washer—thrust—pinion	NT 5145§	6	2					
Shaft—pinion	†NT 5155§		1					WSE use ATJ 7776 with 2 off ATJ 7803
Shaft—pinion	ATJ 7495§	7	1					
Pin—pinion shaft	NT 5917§	8	1					
Housing—bearing	†ATJ 7667§	9	2					WSE use ATJ 7782
Casing—axle—RH	ATJ 7205§	10	1					
Pinion—final drive—RH	†ATJ 7187§	11	1					WSE use ATJ 9491 with 1 off ATJ 9492
Cup—spring locating	ATJ 7277§	12	1					
Ring—locking	ATJ 7377§	13	1					
Spring—release	ATJ 7378§	14	1					
Shaft and lever	ATJ 7284§	15	1					
Fork—operating	†ATJ 7247§		1					
Fork—operating	ATJ 9426§	16	1					WSE use ATJ 9426
Fork—operating	†ATJ 9514§		1					Required when converting to positive diff lock
Screw—locating	†NT 5798§	17	1				4DM–787–6335L to 11503L (less 8981L, 8990L, 8994L, 9529L to 10000L and 11305L)	WSE use ATJ 7775
Ring—sealing	TRS 1216	18	1					
Screw—retaining	ATJ 7206§	19	1					
Washer—spring—screw	LWN 206	20	1					
Rod—control	ATJ 7198§	21	1					
Rod—control	†ATJ 9515§		1				792–1881L to 10761L (less 3804L, 3935L, 3966L to 10000L and 10640L)	Required when converting to positive diff lock
Jaw—control rod	ATJ 7231§	22	1				3DL–771–4817L to 7003L (less 6519L, 6520L, 6683L and 6686L) 772–1225L to 1939L (less 1844L, 1851L, and 1862L)	
Pin—jaw	CLZ 0515	23	1					
Washer—plain—pin	PWZ 105	24	2					
Plate—pedal	ATJ 7196§	25	1					
Spring—pedal return	ATJ 7197§	26	1					
Screw—stop—pedal	HNS 0507	27	1					
Nut—screw	FNZ 105	28	2					
Pin—pedal hinge	ATJ 7192§	29	1					
Eyebolt—pedal to floor plate	ATJ 7193§	30	1					
Nut—eyebolt and hinge pin	FNZ 105	31	2					
Washer—plain—nut	PWZ 205	32	3					
Washer—spring—nut	LWZ 205	33	3					
Shaft and lever	ATJ 7370§	34	1					
Fork—operating	ATJ 7380§	35	1				4DM–787–11504L to 22947L (plus 8981L, 8990L, 8994L, 9529L to 10000L and 11305L less 13150L to 20000L) 792–10762L to 12457L (plus 3804L, 3935L, 3966L to 10000L and 10640L) less 5670L to 10000L) 3DL–771–7004L to 9843L (plus 6519L, 6520L, 6683L and 6686L) 772–1940L to 3007L (plus 1844L, 1851L and 1862L)	
Screw—locating	ATJ 7384§	36	1					
Ring—sealing	TRS 1216	18	1					
Screw—retaining	ATJ 7206§	19	1					
Washer—spring—screw	LWN 206	20	1					
Screw—adjusting	HNS 0613	37	1					
Nut—screw	FNN 206	38	1					
Rod—control	ATJ 7371§	39	1					
Jaw—control rod	ATJ 7231§	22	1					
Pin—jaw	CLZ 0515	23	1					
Washer—plain—pin	PWZ 105	24	2					
Pedal	ATJ 7367§	40	1					
Bracket—pedal pivot	ATJ 7368§	41	1					
Washer—plain—pivot pin	PWZ 108	42	2					
Spring—return	ATJ 1006§	43	1					
Washer—tab—return spring	ATJ 7373§	44	1					
Nut—pedal stop	ATJ 7372§	45	1					
Screw	HNS 0506	46	1					
Nut—screw	FNN 105	47	1					

§Parts peculiar to Tractor only

See title-page for application

†Revised Information. Issue 2

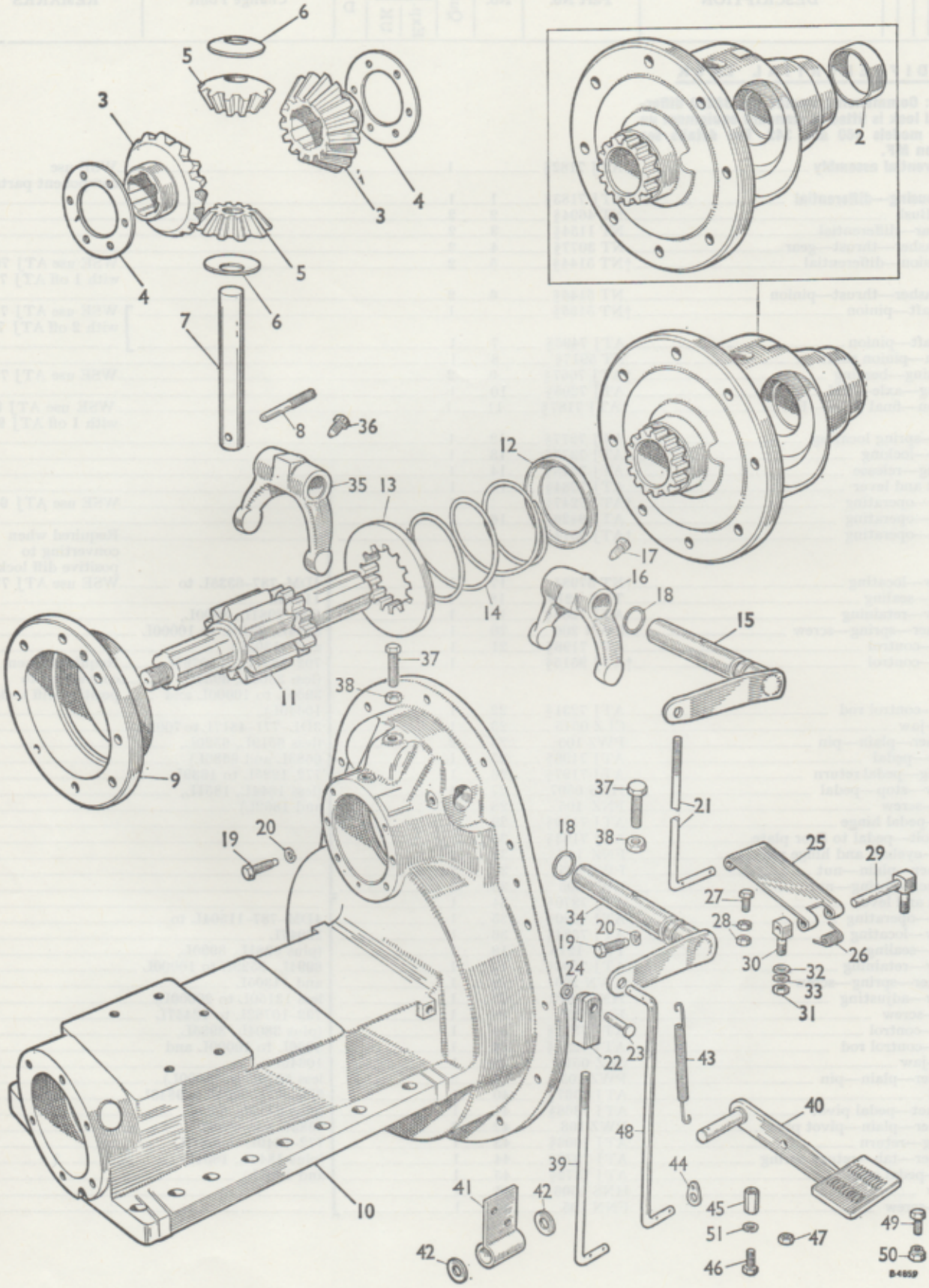
6
5
3
4
3
5
4
6
7
8
36
35
13
12
14
17
16
18
15
11
37
38
9
37
21
38
18
25
29
19
20
27
34
28
20
19
26
30
32
24
33
31
22
23
43
40
48
39
44
41
42
45
51
47
49
10
42
46
50
B4859

Differential Lock—*continued*

DESCRIPTION	Part No.	Illus. No.	Quantity	Stock recommds. DIST. Exp. / UK	Stock recommds. D	Change Point	REMARKS
Shaft and lever	ATJ 7370§	34	1				
Fork—operating	ATJ 7380§	35	1				
Screw—locating	ATJ 7384§	36	1				
Ring—sealing	TRS 1216	18	1				
Screw—retaining	ATJ 7206§	19	1				
Washer—spring—screw	LWN 206	20	1				
Screw—adjusting	HNS 0613	37	1			4DM–787–22948L on	
Nut—screw	FNN 206	38	1			(plus 13150L to 20000L)	
Rod—control	ATJ 8441§	48	1			792–12458L on	
Washer—plain—control rod	PWZ 105	24	4			(plus 5670L to 10000L)	
Pedal	ATJ 7367§	40	1			3DL–771–9844L on	
Bracket—pedal pivot	ATJ 7368§	41	1			772–3008L on	
Washer—plain—pivot pin	PWZ 108	42	2			460–24000L on	
Spring—return	ATJ 1006§	43	1			342–24000 Lon	
Washer—tab—return spring	ATJ 7373§	44	1				
Screw—pedal adjusting	HZS 0612	49	1				
Nut—screw	FNZ 106	50	1				
Washer—spring—nut	LWZ 205	51	1				
Screw—pedal stop	HNS 0506	46	1				
Nut—screw	FNN 105	47	1				

§ Parts peculiar to Tractor only

See title-page for application

	DESCRIPTION	Part No.	Illus. No.	Quantity	Stock recommds. DIST. Eng	Stock recommds. DIST. AKD	Stock recommds. D	Change Point	REMARKS
	Differential Lock—continued								
	Shaft and lever	AT1 17705	34	1					
	Fork—operating	AT1 17905	35	1					
	Screw—locating	AT1 17905	36	1					
	Ring—sealing	TPS 1216	18	1					
	Screw—retaining	AT1 17905	19	1					
	Washer—spring—screw	LWS 206	20	1					
	Screw—adjusting	HNS 0612	37	1					
	Nut—screw	FNX 204	38	1					
	Rod—control	AT1 16415	45	1					
	Washer—plain—control rod	FWZ 105	54	4					
	Pedal	AT1 17675	40	1					
	Bracket—pedal pivot	AT1 17605	41	1					
	Washer—plain—pivot pin	FWZ 106	42	2					
	Spring—return	AT1 10065	43	1					
	Washer—tab—return spring	AT1 17725	44	1					
	Screw—pedal adjusting	HZS 0612	49	1					
	Nut—screw	FNZ 106	50	1					
	Washer—spring—nut	LWZ 205	51	1					
	Screw—pedal stop	HNS 0606	46	1					
	Nut—screw	FNX 105	47	1					

† Parts peculiar to Tractor only See title-page for applications

INDEPENDENT WHEEL BRAKES

	Page	Plate
†AXLE CASING (3DL, 4DM, 342, 460) ...	MR 61·1	R 47
AXLE CASING (342, 460)	MR 63	R 48
AXLE CASING (10/42, 10/60)	MR 65	R 50
AXLE SHAFT (3DL, 4DM, 342, 460) ...	MR 62	R 47
AXLE SHAFT (342, 460)	MR 63	R 48
AXLE SHAFT (10/42, 10/60)	MR 65	R 50
BRAKE BALANCE LEVER	MR 71	R 56
DIFFERENTIAL LOCK SHAFT AND LEVER (342, 460)	MR 64	R 49
DIFFERENTIAL LOCK SHAFT AND LEVER (10/42, 10/60)	MR 66	R 51
†FINAL DRIVE GEAR AND PINION (3DL, 4DM, 342, 460)	MR 61·1	R 47
FINAL DRIVE GEAR AND PINION (342, 460)	MR 63	R 48
FINAL DRIVE GEAR AND PINION (10/42, 10/60)	MR 65	R 50
FOOTBRAKE (3DL, 4DM, 342, 460) ...	MR 67	R 52
FOOTBRAKE (10/42, 10/60)	MR 68	R 53
HANDBRAKE	MR 69	R 54
HANDBRAKE LEVER	MR 70	R 55
HANDBRAKE SUPPORT BRACKET	MR 70	R 55

† Revised Information—Issue 2

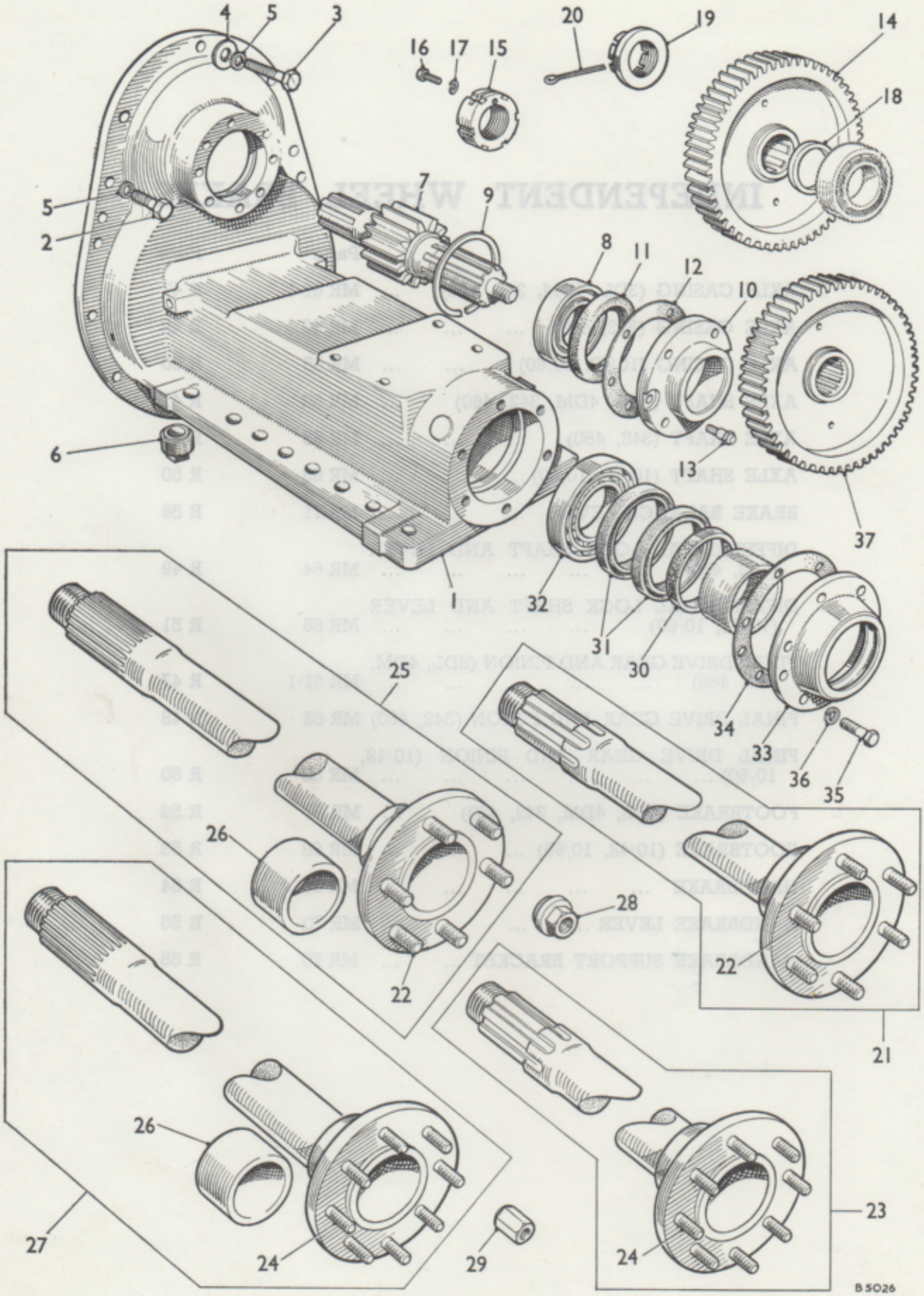
4
5
3
16
17
15
20
19
14
18
5
2
7
9
8
11
12
10
6
13
37
1
32
31
30
34
33
36
35
25
26
22
28
22
21
26
27
24
29
24
23
B 5026

DESCRIPTION	Part No.	Illus. No.	Quantity	Stock recommds. DIST. Exp.	Stock recommds. DIST. UK	Stock recommds. D	Change Point	REMARKS
INDEPENDENT WHEEL BRAKES								
Axle assemblies								
Right-hand **4DM**	ATJ 7220§		1				787–6489B to 22800B (less 13111B to 20000B) 792–2000B to 12451B (less 5621B to 10000B)	
Left-hand **4DM**	ATJ 7221§		1					
Right-hand **3DL**	ATJ 7218§		1				771–4681B to 9785B 772–2000B to 2998B	
Left-hand **3DL**	ATJ 7219§		1					
Right-hand **4DM, 460**	ATJ 7425§		1				4DM–787–22801B on (plus 13111B to 20000B)	
Left-hand **4DM, 460**	ATJ 7426§		1					
Right-hand **3DL, 342**	ATJ 7423§		1				792–12452B on (plus 5621B to 10000B) 3DL–771–9786B on 772–2999B on 460–24000B to 38249B (less 38173B to 38192B) 342–24000B to 38249B (less 38173B to 38192B)	Not available; use component parts
Left-hand **3DL, 342**	ATJ 7424§		1					
Casing—axle	NT 7179§	1	2					
Bolt—casing to gearbox	HBN 0712	2	24					
Bolt—casing to gearbox	HBN 0714	3	4					
Washer—plain—bolt	PWN 107	4	4					
Washer—spring—bolt	LWN 207	5	28					
Plug—axle drain	ADP 116	6	2					
Bearing—pinion	†ATJ 1000§	8	2				4DM–787–6489B on 792–2000B on (less 38173B to 38192B) 342–24000B to 38249B (less 38173B to 38192B)	Not available; use ATJ 2098
Bearing—pinion	†ATJ 2098§	8	2					
Bearing—pinion	ATJ 1000§	8	2					
Circlip—internal	NT 4017§	9	2					
Cover—pinion bearing	NT 7177§	10	2					
Seal—oil	NT 3073§		2					Not available; use ATJ 7651
Seal—oil	ATJ 7651§	11	2					
Shim	NT 1331§	12	A/R					
Screw—dowel	NT 7309§	13	4					
Gear—final drive	†NT 7181§		2					Not available; use ATJ 9490 with ATJ 9491
	†ATJ 9397§	14	2					
Nut assembly—axle shaft	ATJ 9389§		2					Not available; use component parts
Nut—axle shaft	ATJ 7311§	15	2				4DM–787–6489B to 22800B (less 13111B to 20000B) 792–2000B to 12451B (less 5621B to 10000B) 3DL–771–4681B to 9785B 772–2000B to 2998B	
Screw	ATJ 7312§	16	2					
Washer—spring—screw	LWN 205	17	2					
Washers—accommodation								
·208″ (5·283 mm.)	ATJ 9399§	18	A/R					
·212″ (5·385 mm.)	ATJ 9400§	18	A/R					
·216″ (5·486 mm.)	ATJ 9401§	18	A/R					
·220″ (5·588 mm.)	ATJ 9402§	18	A/R					
·224″ (5·690 mm.)	ATJ 9403§	18	A/R					
·228″ (5·791 mm.)	ATJ 9404§	18	A/R					
·232″ (5·893 mm.)	ATJ 9405§	18	A/R					
·236″ (5·994 mm.)	ATJ 9406§	18	A/R					
·240″ (6·096 mm.)	ATJ 9407§	18	A/R					
·244″ (6·198 mm.)	ATJ 9408§	18	A/R					
·248″ (6·299 mm.)	ATJ 9409§	18	A/R					
·252″ (6·400 mm.)	ATJ 9410§	18	A/R					
Pinion—final drive	†ATJ 7165§		2					Not available; use ATJ 9491 with ATJ 9490
	†ATJ 7187§	7	2					
	†ATJ 9491§	7	2					

§ Parts peculiar to Tractor only

See title-page for application

†Revised Information—Issue 2

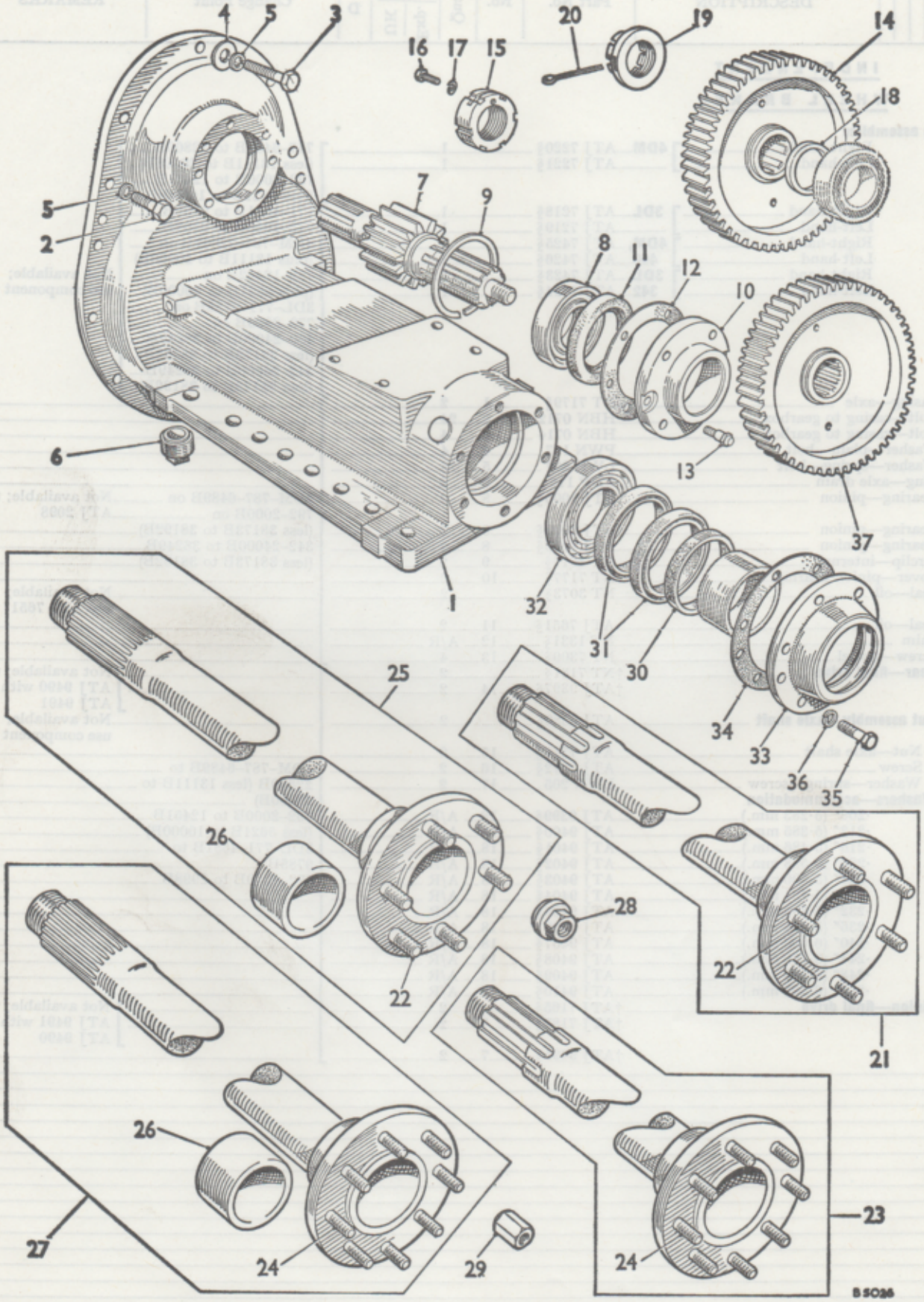
4
5
3
20
19
14
16
17
15
18
5
2
7
9
8
11
12
10
6
13
37
1
32
31
30
25
34
33
36
35
26
28
22
22
21
26
27
24
29
24
23
B5036

DESCRIPTION	Part No.	Illus. No.	Quantity	Stock recommds. DIST. Exp.	Stock recommds. DIST. UK	Stock recommds. D	Change Point	REMARKS
Independent Wheel Brakes—*continued*								
Rear Axle—*continued*								
Gear—final drive	†ATJ 7400§	37	2					Not available; use ATJ 9492 with ATJ 9491
Gear—final drive	†ATJ 9492§	37	2				4DM–787–22801B on (plus 13111B to 20000B)	
Nut—axle shaft	ATJ 7228§	19	2				792–12452B on	
Pin—cotter	CPS 0628	20	2					
Pinion—final drive	†ATJ 7165§		2				(plus 5621B to 10000B)	Not available; use ATJ 9491 with ATJ 9492
	†ATJ 7187§	7	2				3DL–771–9786B on 772–2999B on	
	†ATJ 9491§	7	2				460–24000B to 38249B (less 38173B to 38192B) 342–24000B to 38249B (less 38173B to 38192B)	
Sub-assembly—axle shaft	ATJ 7161§	21	2					
Shaft—axle	ATJ 7162§		2					Not available; use ATJ 7161
4DM							4DM–787–6489B to 22800B	Not available; use ATJ 7056
Sleeve—shaft	NT 7244§		2				(less 13111B to 20000B) 792–2000B to 12451B	
Stud—wheel	ATJ 7246§	22	12				(less 5621B to 10000B	
Sub-assembly—axle shaft	ATJ 7159§	23	2				3DL–771–4681B to 9785B	Not available; use ATJ 7159
Shaft—axle	ATJ 7160§		2				772–2000B to 2998B	Not available; use ATJ 7056
3DL								
Sleeve—shaft	NT 7244§		2					
Stud—wheel	ATJ 7245§	24	16					
Sub-assembly—axle shaft	†ATJ 7402§	25	2					
Shaft—axle	†ATJ 7401§		2				4DM–787–22801B on (plus 13111B to 20000B) 792–12452B on	Not available; use ATJ 7688 with ATJ 7673 nut. For details see page MR 65
4DM, 460								
Sleeve—shaft	ATJ 7056§	26	2				(plus 5621B to 10000B)	
Stud—wheel	ATJ 7246§	22	12				3DL–771–9786B on	
Sub-assembly—axle shaft	†ATJ 7404§	27	2					Not available; use ATJ 7690 with ATJ 7673 nut. For details see page MR 65
Shaft—axle	†ATJ 7403§		2				772–2999B on 460–24000B to 38249B	
3DL, 342								
Sleeve—shaft	ATJ 7056§	26	2				342–24000B to 38249B	
Stud—wheel	ATJ 7245§	24	16				(less 38173B to 38192B)	
Nut—wheel stud **4DM, 460**	NT 7202§	28	12					
Nut—wheel stud **3DL, 342**	NT 8321§	29	16				4DM–787–6489B on	
Washer (felt)	NT 7183§	30	2				792–2000B on	
Seal—oil	ATJ 1024§	31	4				3DL–771–4681B on	
Bearing—axle shaft	2K 6008	32	4				772–2000B on 460–24000B to 38249B (less 38173B to 38192B)	Part No. change; was NT 8174
Cover—axle end	ATJ 7171§	33	2				342–24000B to 38249B	
Joint—cover	ATJ 7207§	34	2				(less 38173B to 38192B)	
Bolt—end cover to axle case	ATJ 7163§	35	12					
Washer—spring—bolt	LWN 206	36	12					

§ Parts peculiar to Tractor only

See title-page for application

†Revised Information—Issue 2

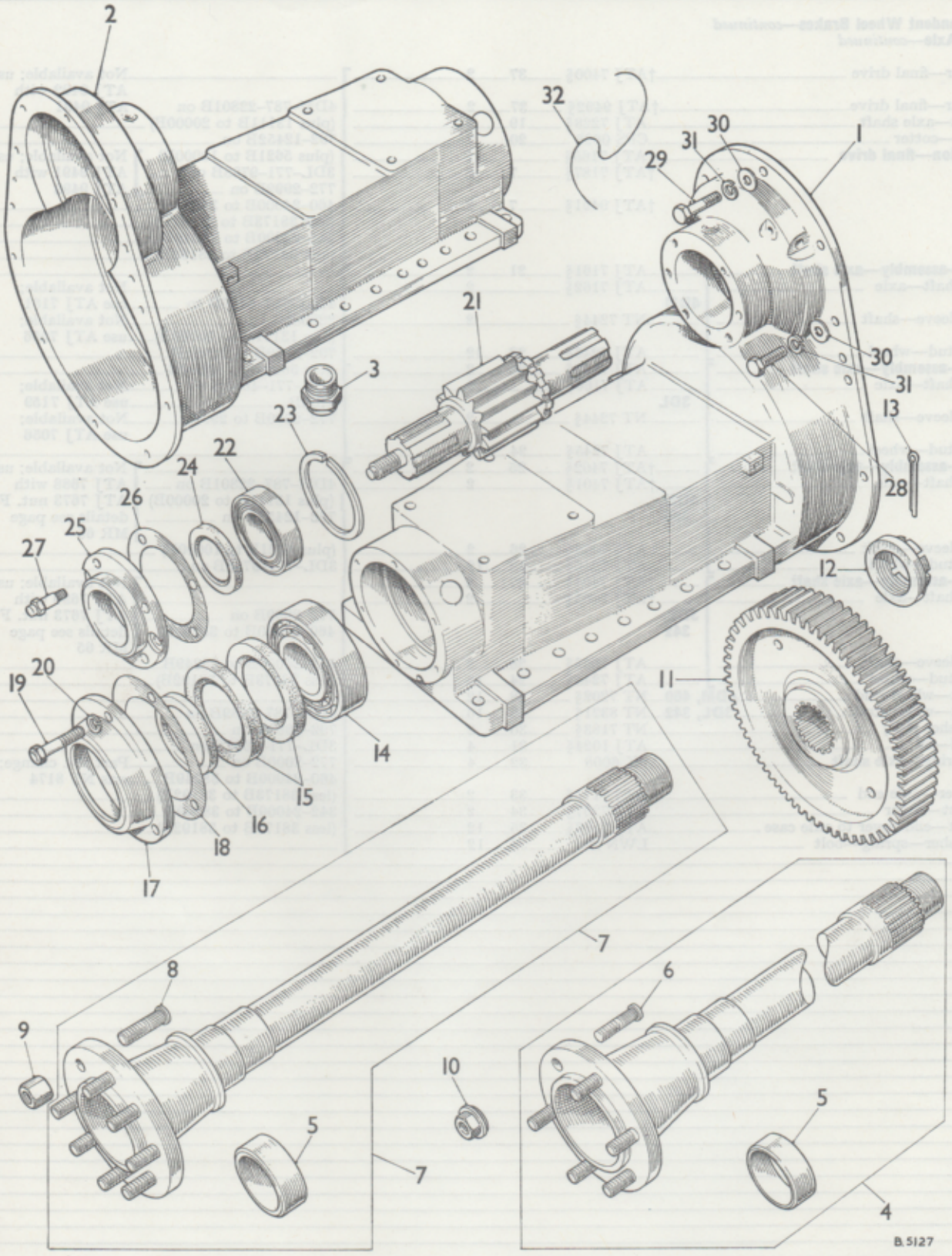
2
32
30
31
29
1
21
3
23
22
24
26
25
27
30
31
13
28
12
11
20
19
14
15
16
18
17
7
8
9
6
10
5
7
5
4
B.5127

	DESCRIPTION	Part No.	Illus. No.	Quantity	Stock recommds. DIST. Exp.	UK	D	Change Point	REMARKS
	Independent Wheel Brakes—*continued*								
	Rear axle assembly	NSP		2					
	Casing—axle—RH	ATJ 7205§	1	1					
	Casing—axle—LH	NT 7179§	2	1					
	Plug—axle drain	ADP 116	3	2					
	Shaft assembly—axle	†ATJ 7402§	4	2					Not available; use ATJ 7688 with ATJ 7673 nut. For details see page MR 65
	Sleeve	ATJ 7056§	5	2					
460	Stud—wheel	ATJ 7246§	6	12					
	Shaft assembly—axle	ATJ 7404§	7	2					Not available; use ATJ 7690 with ATJ 7673 nut. For details see page page MR 65
	Sleeve	ATJ 7056§	5	2					
342	Stud—wheel	ATJ 7245§	8	16					
460	Nut—wheel stud	NT 7202§	9	12					
342	Nut—wheel stud	NT 8321§	10	16					
	Gear—final drive	ATJ 7400§	11	2					Not available; use ATJ 9492 with ATJ 9493
	Gear—final drive	†ATJ 9492§	11	2					
	Nut—axle shaft	ATJ 7228§	12	2					
	Pin—cotter	CPS 0628	13	2					
	Bearing—axle shaft	2K 6008	14	4				460–38250B on	
	Seal—oil	ATJ 1024§	15	4				(plus 38173B to 38192B)	
	Washer (felt)	NT 7183§	16	2				342–38250B on	
	Cover—axle end	ATJ 7171§	17	2				(plus 38173B to 38192B)	
	Joint—cover	ATJ 7207§	18	2					
	Bolt—end cover to axle casing	ATJ 7163§	19	12					
	Washer—spring—bolt	LWN 206	20	12					
	Pinion—final drive	ATJ 7438§	21	2					Not available; use ATJ 9493 with ATJ 9492
	Pinion—final drive	†ATJ 9493§	21	2					
	Bearing—pinion	†ATJ 1000§	22	2					Not available; use ATJ 2098
	Bearing—pinion	†ATJ 2098§	22	2					
	Circlip—bearing	NT 4017§	23	2					
	Seal—oil	†NT 3073§	24	2					Not available; use ATJ 7651
	Seal—oil	†ATJ 7651§	24	2					
	Cover—pinion bearing	NT 7177§	25	2					
	Shim—cover	NT 1331§	26	A/R					
	Screw—dowel—cover to axle casing	NT 7309§	27	4					
	Bolt—axle casing to gearbox	HBN 0712	28	24					
	Bolt—axle casing to gearbox	HBN 0714	29	4					
	Washer—plain—bolt	PWN 107	30	4					
	Washer—spring—bolt	LWN 207	31	28					
	Wire—locking	ATJ 9392§	32	A/R					Supplied in multiples of 5 yards

§ Parts peculiar to Tractor only

See title-page for application

†Revised Information—Issue 2

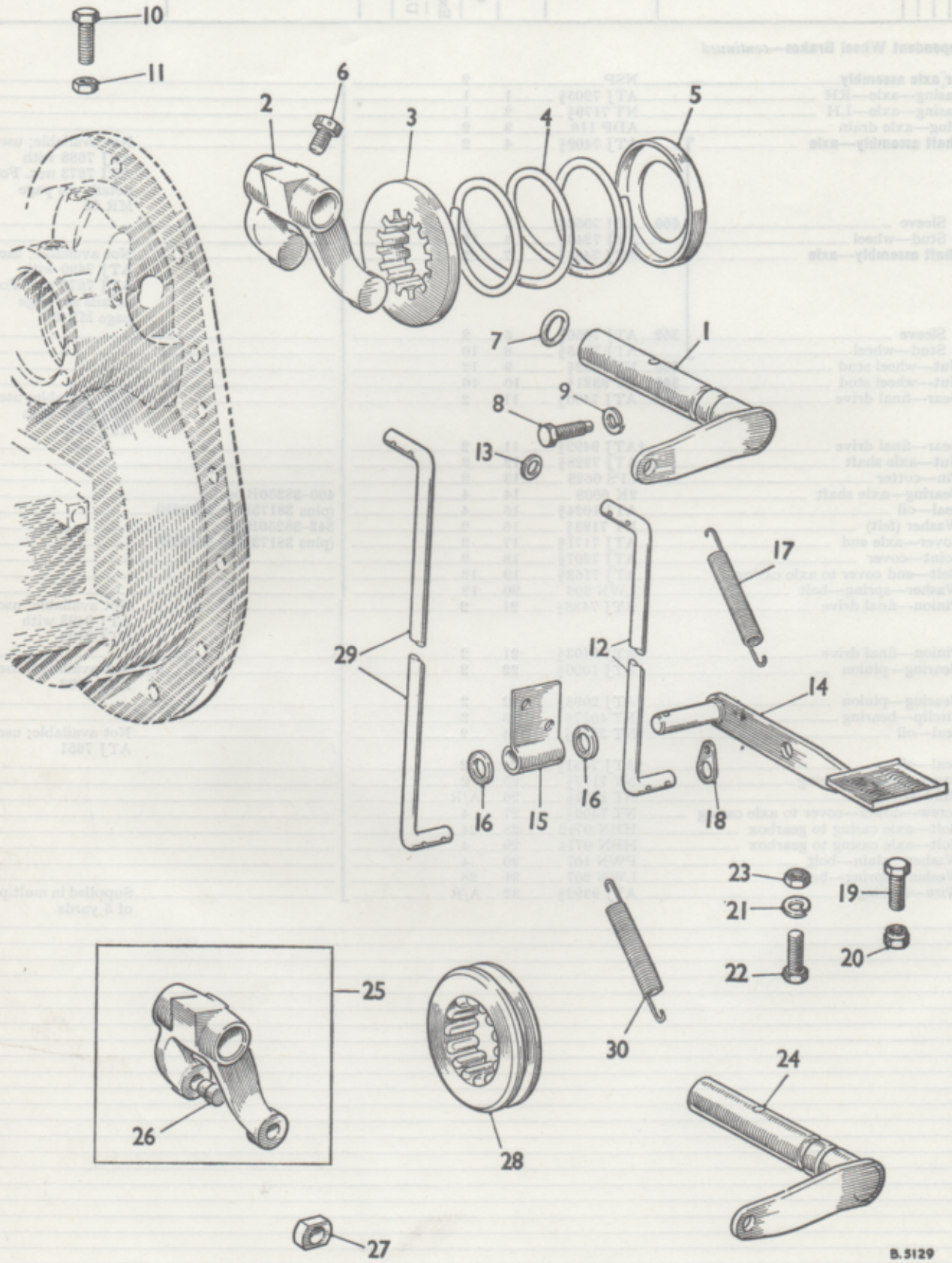
10
11
6
2
3
4
5
7
1
9
8
13
17
29
12
14
16
15
16
18
23
19
21
20
22
25
30
24
26
28
27
B.5129

DESCRIPTION	Part No.	Illus. No.	Quantity	Stock recommds. DIST. Exp.	Stock recommds. DIST. UK	Stock recommds. D	Change Point	REMARKS
Independent Wheel Brakes—*continued*								
Rear Axle—*continued*								
Shaft and lever	ATJ 7370§	1	1					
Fork—operating	ATJ 7380§	2	1					
Ring—locking	ATJ 7377§	3	1					
Spring—release	ATJ 7378§	4	1					
Cup—spring locating	ATJ 7277§	5	1					
Screw—fork locating	ATJ 7384§	6	1					
Ring—sealing	TRS 1216	7	1					
Screw—retaining	ATJ 7206§	8	1					
Washer—spring—screw	LWN 206	9	1					
Screw—adjusting	HNS 0613	10	1				342–38250B to 55560B	
Nut—screw	FNN 206	11	1				(plus 38173B to 38192B)	
Rod—control	ATJ 8441§	12	1				460–38250B to 55560B	
Washer—plain—rod	PWZ 105	13	4				(plus 38173B to 38192B)	
Pedal	ATJ 7367§	14	1					
Bracket—pedal pivot	ATJ 7368§	15	1					
Washer—plain—pivot pin	PWZ 108	16	2					
Spring—return	ATJ 1006§	17	1					
Washer—tab—return spring	ATJ 7373§	18	1					
Screw—pedal adjusting	HNS 0612	19	1					
Nut—screw	FNZ 106	20	1					
Washer—spring—nut	LWZ 205	21	1					
Screw—pedal stop	HNS 0506	22	1					
Nut—screw	FNN 105	23	1					
Shaft and lever	ATJ 7543§	24	1					
Sub-assembly—operating fork	ATJ 7538§	25	1					
Pin—swivel	ATJ 7540§	26	2					
Pad—swivel	ATJ 7541§	27	2					
Ring—locking	ATJ 7542§	28	1					
Screw—locating	ATJ 7384§	6	1					
Ring—sealing	TRS 1216	7	1					
Screw—retaining	ATJ 7206§	8	1					
Washer—spring—screw	LWN 206	9	1					
Screw—adjusting	HNS 0614	10	1					
Nut—screw	FNN 206	11	1				342–5561 on	
Rod—control	ATJ 7544§	29	1				460–5561 on	
Washer—plain—rod	PWZ 105	13	4					
Pedal	ATJ 7367§	14	1					
Bracket—pedal pivot	ATJ 7368§	15	1					
Washer—plain—pivot pin	PWZ 108	16	2					
Spring—return	ATJ 7545§	30	1					
Screw—pedal adjusting	HNS 0612	19	1					
Nut—screw	FNZ 106	20	1					
Washer—spring—nut	LWZ 205	21	1					
Screw—pedal stop	HNS 0506	22	1					
Nut—screw	FNN 105	23	1					

§ **Parts peculiar to Tractor only**

See title-page for application

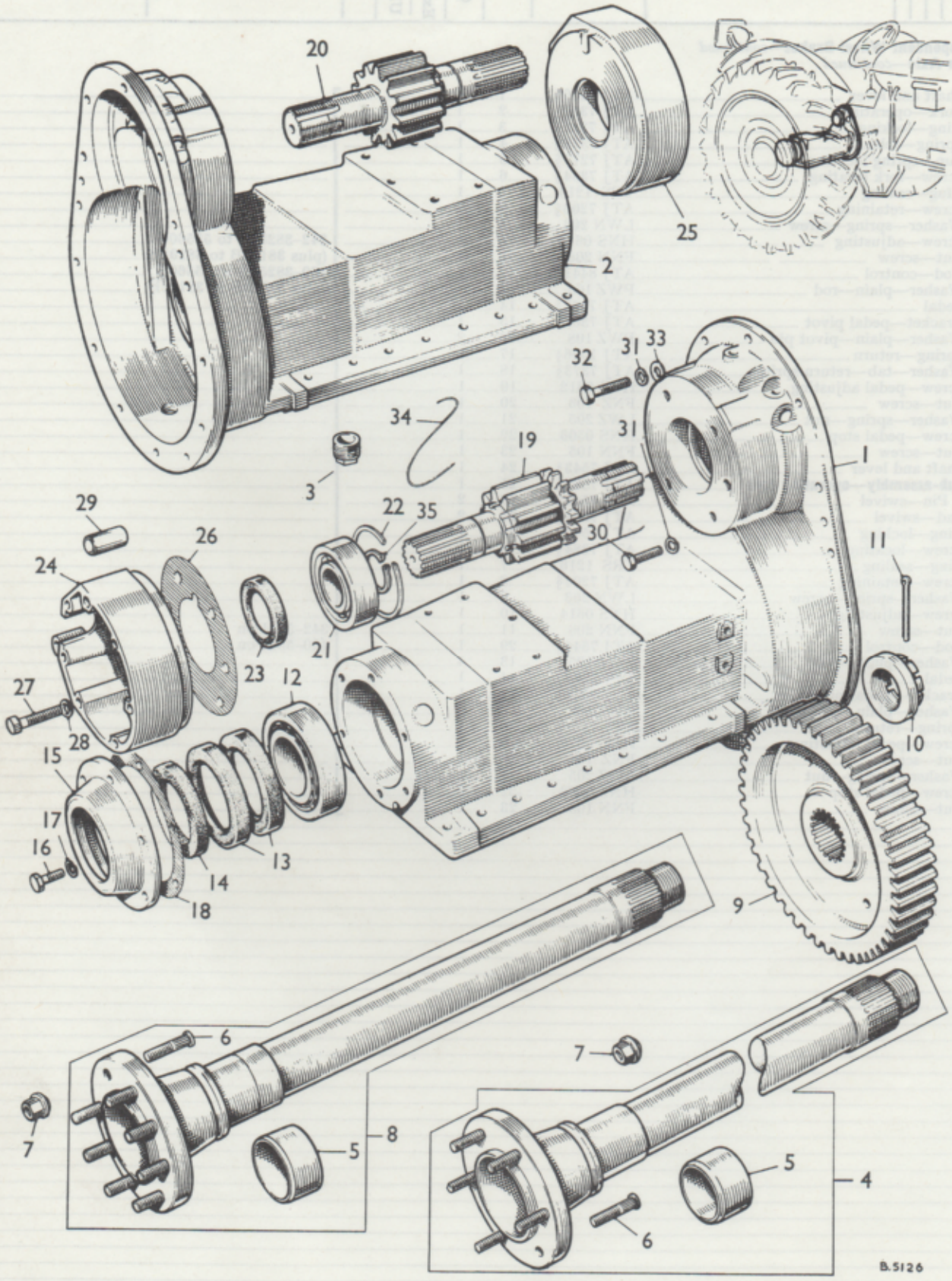

To face page MR 65

	DESCRIPTION	Part No.	Illus. No.	Quantity	Stock recommds. DIST. Exp.	Stock recommds. DIST. UK	Stock recommds. D	Change Point	REMARKS
	Independent Wheel Brakes—*continued*								
	Rear axle assembly	NSP		2					
	Casing—rear axle—RH	ATJ 7549§	1	1				10/42–57420 on	
	Casing—rear axle—LH	ATJ 7550§	2	1				10/60–57420 on	
	Plug—drain	ADP 116	3	2					
	Shaft assembly—axle	†ATJ 7402§	4	2				57420 to 68244 (plus 69533 and 69534)	WSE use ATJ 7688 with ATJ 7673 nut
		†ATJ 7688§	4	2				68245 to 89156 (less 96533 and 96534)	
10/60		†ATJ 7788§	4	2				89157 on	
	Sleeve	†ATJ 7056§	5	2				57420 to 89156	
	Sleeve	†ATJ 7784§	5	2				89157 on	
	Stud—wheel	ATJ 7246§	6	12				57420 on	
	Nut—wheel stud	NT 7202§	7	12					
	Shaft assembly—axle	†ATJ 7404§	8	12				57420 to 68375 (plus 69533 and 69534)	WSE use ATJ 7690 with ATJ 7673 nut
		†ATJ 7690§	8	12				68376 to 89156 (less 69533 and 69534)	Correction; was ATJ 7960
		†ATJ 7792§	8	12				89157 on	
	Sleeve	†ATJ 7056§	5	2				57420 to 89156	
	Sleeve	†ATJ 7784§	5	2				89157 on	
10/42	Stud—wheel	ATJ 7245§	6	16				57420 on	
	Nut—wheel stud	NT 8321§	7	16					
	Gear—final drive	†ATJ 7551§	9	2				10/42–57420 on 10/60–57420 on	WSEuse ATJ 7927 with ATJ 7926 or ATJ 7925 for details refer to page MF 27·1
	Nut—axle shaft	ATJ 7228§	10	2				10/42–57420 to 68375 10/60–57420 to 68244 plus 69533 and 69534	
	Nut—axle shaft	ATJ 7673§	10	2				10/42–68376 on 10/60–68245 on Less 69533 and 69534	
	Pin—cotter	CPS 0628	11	2					
	Bearing—axle shaft	2K 6008	12	4					
	Seal—oil	ATJ 1024§	13	4					
	Washer (felt)	NT 7183§	14	2					
	Cover—axle end	ATJ 7171§	15	2					
	Bolt—cover to axle casing	ATJ 7163§	16	12					
	Washer—spring—bolt	LWN 206	17	12					
	Joint—end cover	ATJ 7207§	18	2					
	Pinion—final drive—RH	†ATJ 7639§	19	1					WSE use ATJ 7926 orATJ 7925 with ATJ 7927 for details refer to page MF 27·1
	Pinion—final drive—LH	†ATJ 7640§	20	1					
	Circlip—pinion	ESC 045	35	2					
	Bearing—pinion	ATJ 1000§	21	2					WSE use ATJ 2098
	Bearing—pinion	ATJ 2098§	21	2				10/42–57420 on	
	Circlip—bearing	NT 4017§	22	2				10/60–57420 on	
	Seal—oil	ATJ 7558§	23	2					
	Housing—brake—RH	ATJ 7556§	24	1					
	Housing—brake—LH	ATJ 7555§	25	1					
	Joint—housing	ATJ 7557§	26	2					
	Bolt—brake housing	HBN 0715	27	12					
	Washer—spring—bolt	LWN 207	28	12					
	Dowel—housing to axle casing	AMK 602	29	4					
	Bolt—axle casing to gearbox	HBN 0712	30	24					
	Washer—spring—bolt	LWN 207	31	24					
	Bolt—axle casing to gearbox	HBN 0714	32	4					
	Washer—spring—bolt	LWN 207	31	4					
	Washer—plain—bolt	PWN 107	33	4					
	Wire—locking	ATJ 9392§	34	A/R					Supplied in multiples of 5 yards

§Parts peculiar to Tractor only

See title-page for application

†Revised Information. Issue 3

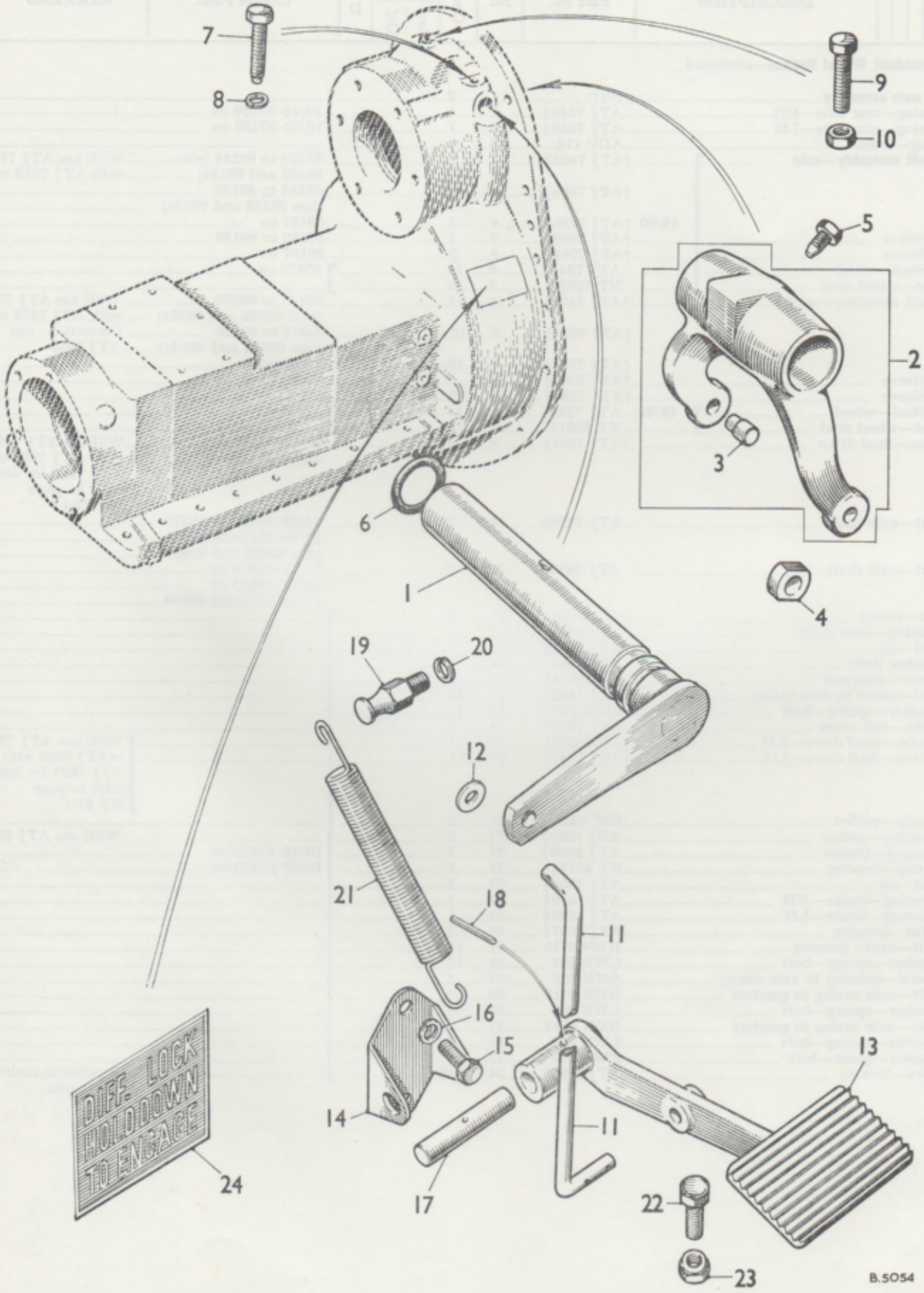
7
8
9
10
5
2
3
6
1
4
19
20
12
21
18
11
16
15
13
14
11
17
22
23
24
DIFF. LOCK
HOLD DOWN
TO ENGAGE
B.5054

DESCRIPTION	Part No.	Illus. No.	Quantity	Stock recommds. DIST. Exp.	Stock recommds. DIST. UK	Stock recommds. D	Change Point	REMARKS
Independent Wheel Brakes—*continued*								
Sub-assembly—differential lock shaft and lever	ATJ 7599§	1	1					
Fork assembly—operating	ATJ 7538§	2	1					
Pin—swivel	ATJ 7540§	3	2					
Pad—swivel	ATJ 7541§	4	2					
Screw—locating—operating fork	ATJ 7384§	5	1					
Ring—sealing	TRS 1216	6	1					
Screw—retaining	ATJ 7206§	7	1					
Washer—spring—screw	LWN 206	8	1					
Screw—stop	HNS 0614	9	1					
Nut—screw	FNN 206	10	1					
Rod—differential lock control	ATJ 7595§	11	1					
Washer—plain—rod	PWZ 105	12	4				10/42–57420 on	
Pedal—operating	ATJ 7592§	13	1				10/60–57420 on	
Bracket—pedal	ATJ 7593§	14	1					
Screw—bracket	HNS 0505	15	2					
Washer—spring—screw	LWN 205	16	2					
Pin—pivot—pedal	ATJ 7594§	17	1					
Pin—grooved	MPS 0406	18	1					
Stud—spring mounting	ATJ 7596§	19	1					
Washer—spring—stud	LWN 205	20	1					
Spring—return	ATJ 7545§	21	1					
Screw—adjusting	HZS 0609	22	1					
Nut—screw	FNZ 206	23	1					
Transfer—differential lock instruction	ATJ 7650§	24	1					

§ **Parts peculiar to Tractor only**

See title-page for application

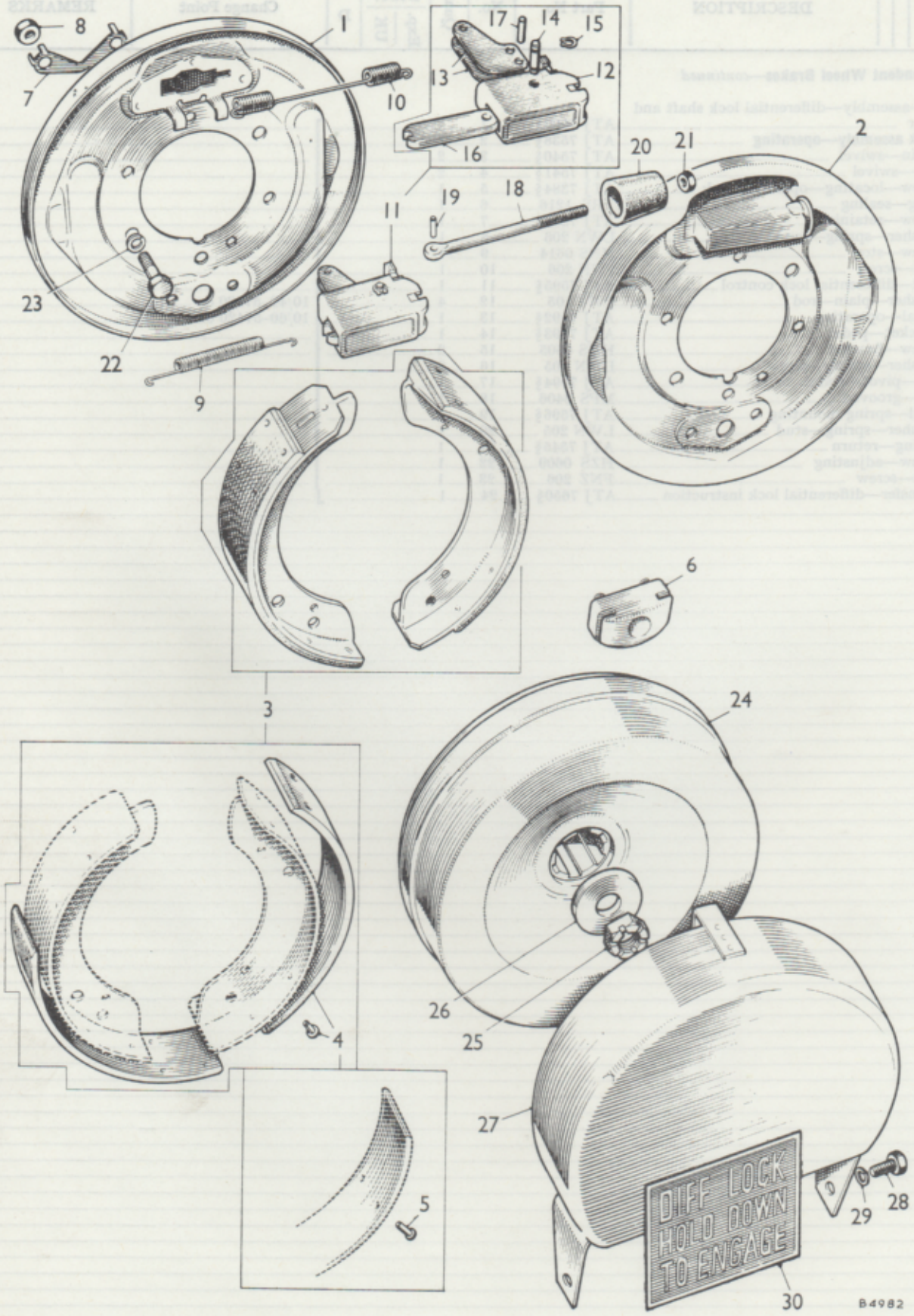

To face page MR 67

Independent Wheel Brakes—*continued*

DESCRIPTION	Part No.	Illus. No.	Quantity	Stock recommds. DIST. Exp.	Stock recommds. DIST. UK	Stock recommds. D	Change Point	REMARKS
BRAKES								
Brake assembly—foot—RH	ATJ 7275§		1					Not available; use component parts
Brake assembly—foot—LH	ATJ 7276§		1					
Plate—brake—RH	17H 7025§	1	1					
Plate—brake—LH	17H 7026§	2	1					
Shoe assembly—brake	8G 8629§	3	2 sets					
Lining and rivet (Not UK)	8G 8630§	4	1 set					
Rivet (Not UK)	7H 7398	5	48					
Abutment	17H 7726§	6	2					
Plate—locking	17H 7725§	7	2					
Nut—abutment stud	FNN 107	8	4					Part No. change; was 17H 7728
Spring—tension	17H 7034§	9	2					
Spring—shoe pull-off	17H 7035§	10	2					
Expander assembly	ATJ 9307§	11	2					
Body	17H 7024§	12	2				3DL–771–4681 on	
Lever—outer	17H 7727§	13	2				4DM–787–6489 on	
Pin—lever pivot	17H 7027§	14	2				342–24000 on	
Circlip—pin	27H 7475§	15	4				460–24000 on	
Lever—inner	17H 7038§	16	2					
Pin—inner lever to outer lever	17H 7039§	17	2					
Rod—operating	17H 7031§	18	2					
Pin—rod to outer lever	17H 7032§	19	2					
Boot (rubber)	17H 7028§	20	2					
Nut—operating rod	FNZ 106	21	2					
Bolt—brake plate to axle case	ATJ 1014§	22	8					
Washer—spring—bolt	LWN 206	23	8					
Drum—brake—foot	NT 6625§	24	2					
Nut—drum to pinion shaft	FNN 412	25	2					
Washer—plain—nut	NT 3086§	26	2					
Cover—brake drum	NT 6634§	27	2					
Screw—cover to axle case	HNS 0504	28	6					
Washer—spring—screw	LWZ 205	29	6					
Transfer—differential lock instruction	ATJ 7650§	30	1					

§Parts peculiar to Tractor only

See title-page for application

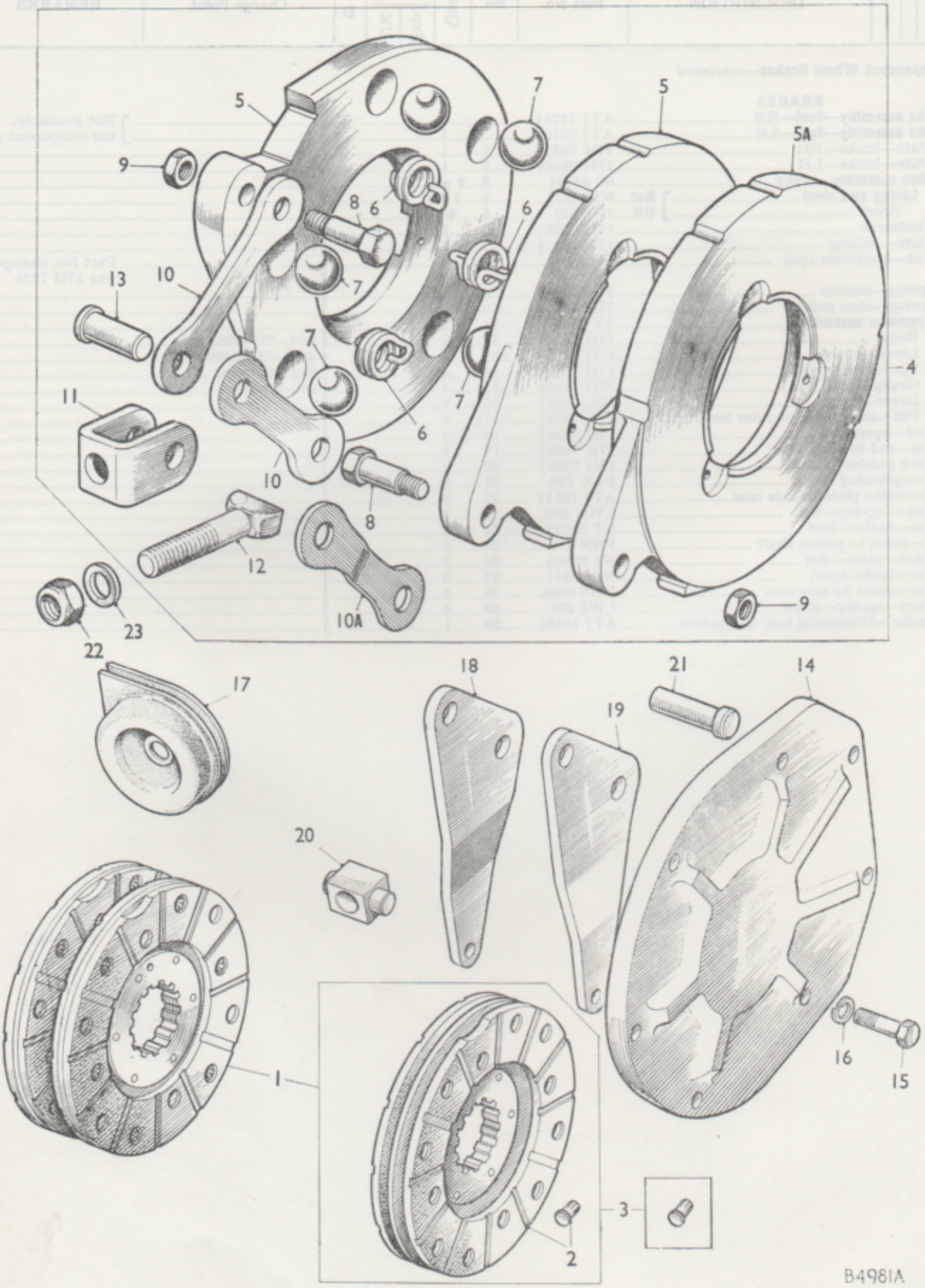
5
7
5
5A
9
8
6
6
13
10
7
7
4
11
6
7
10
8
12
9
10A
22
23
17
18
21
14
19
20
16
15
1
3
2
B4981A

DESCRIPTION	Part No.	Illus. No.	Quantity	Stock recommds. DIST. Exp. / UK	Stock recommds. D	Change Point	REMARKS
Independent Wheel Brakes—*continued*							
Brake assembly—disc—RH	NSP		1			10/42–57420 on	
Brake assembly—disc—LH	NSP		1			10/60–57420 on	
Friction disc assembly—lined	†8G 8956§	1	2 sets			10/42–57420 to 92868	WSE use 18G 8238
Lining and rivet	†8G 8957§	2	1 set			10/60–57420 to 92868	WSE use 18G 8239
Friction disc assembly—lined	†18G 8238§	1	2 sets			10/42–92869 on	
Lining and rivet	†18G 8239§	2	1 set			10/60–92869 on	
Rivet	27H 3505§	3	48			10/42–57420 on	
						10/60–57420 on	
Unit assembly—actuating	†27H 3508§	4	2			10/42–57420 to 92868	
Disc—actuating	†27H 3504§	5	4			10/60–57420 to 92868	
Unit assembly—actuating	†37H 1567§	4	2			10/42–92869 on	
Disc—actuating	†37H 1568§	5A	4			10/60–92869 on	
Spring	27H 3503§	6	6			10/42–57420 on	
Ball	BLS 128§	7	10			10/60–57420 on	Part No. change; was 27H 3502
Pin—pivot	†27H 3501§	8	4			10/42–57420 to 92868	
						10/60–57420 to 92868	
Pin—pivot	†37H 1569§	8	4			10/42–92869 on	
						10/60–92869 on	
Nut	FNZ 205	9	4			10/42–57420 on	
Link	27H 3500§	10	4			10/60–57420 on	WSE use 27H 7743
	†27H 7743§	10	4			10/42–57420 to 92868	
						10/60–57420 to 92868	
Plain	†37H 1570§	10	2			10/42–92869 on	
Cranked	†37H 1571§	10A	4			10/60–92869 on	
Yoke	27H 3499§	11	2				
Rod—operating	27H 3498§	12	2				
Pin—jaw	27H 3497§	13	2				
Plate—cover	ATJ 7561§	14	2				
Bolt—cover plate	HBN 0610	15	14				
Washer—spring—bolt	LWN 206	16	14				
Boot (rubber)	ATJ 7660§	17	2			10/42–57420 on	
Lever—operating—RH	ATJ 7571§	18	2			10/60–57420 on	
Lever—operating—LH	ATJ 7572§	19	2				
Trunnion	ATJ 7573§	20	2				
Pin—pivot	†CLZ 0833	21	2				Correction; was CLZ 0831
Nut—lock	LNZ 208	22	2				
Washer—plain—nut	PWZ 108	23	2				

§Parts peculiar to Tractor only

See title-page for application

†Revised Information. Issue 2

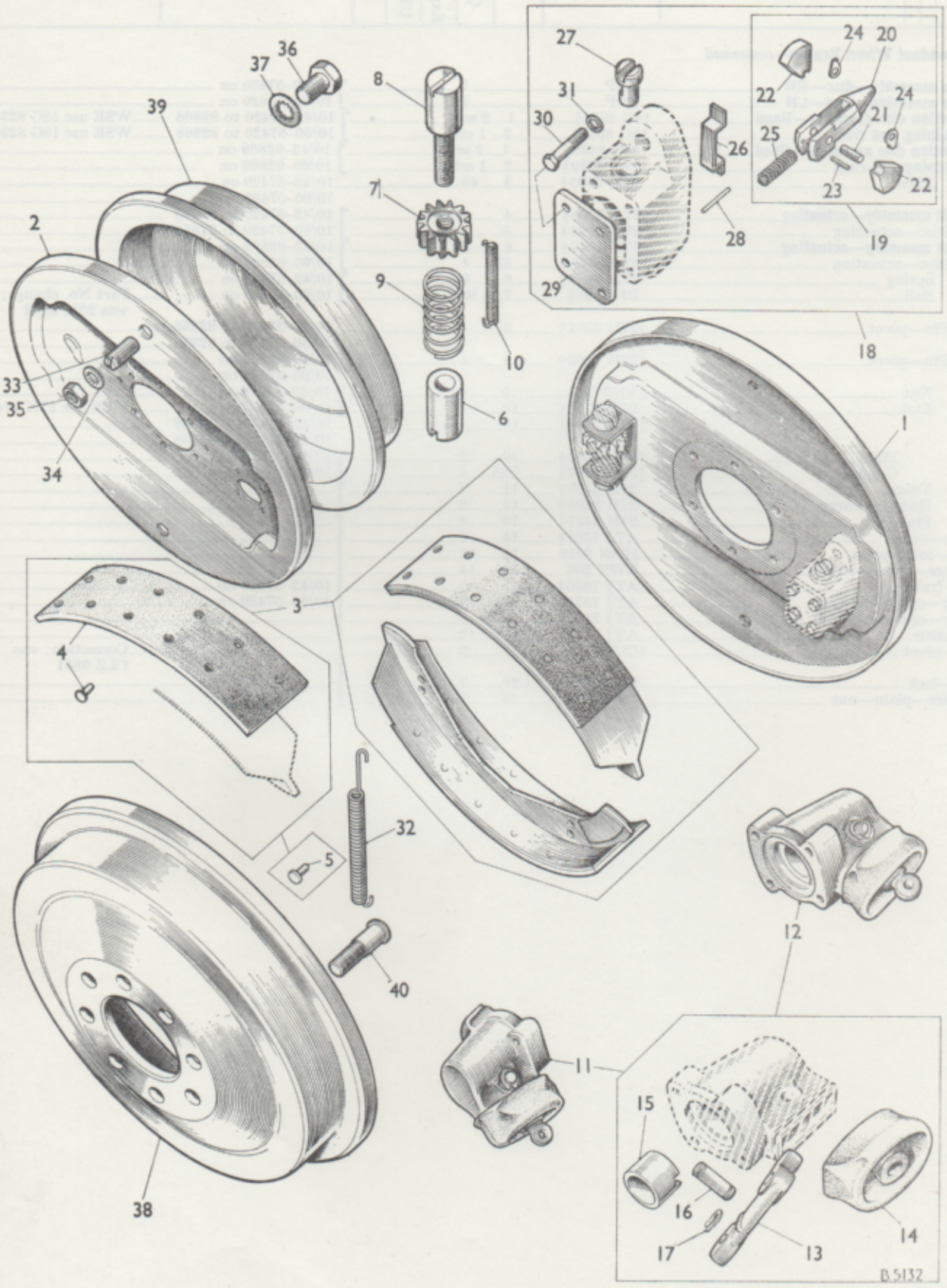
36
37
39
8
7
2
9
10
33
35
34
6
27
31
30
26
28
29
24
20
22
24
21
25
23
22
19
18
1
3
4
32
5
40
12
11
15
16
17
13
14
38
B.5132

DESCRIPTION	Part No.	Illus. No.	Quantity	Stock recommds. DIST. Exp.	UK	D	Change Point	REMARKS
Independent Wheel Brakes—*continued*								
Brakes—*continued*								
Brake assembly—hand—RH	ATJ 7216§		1					WSE use component parts
Brake assembly—hand—LH	ATJ 7217§		1					WSE use component parts
Plate—brake—RH	17H 7745§	1	1					
Plate—brake—LH	17H 7746§	2	1					
Shoe assembly—brake	8G 8631§	3	2 sets					
Lining and rivet	8G 8632§	4	1 set					
Rivet	7H 7399	5	56					
Body—adjuster	17H 7888§	6	2					
Wheel—adjuster	17H 7749§	7	2					
Screw—adjuster	17H 7750§	8	2					
Spring—bias	17H 7751§	9	2					
Spring—clicker	17H 7761§	10	2					
Expander assembly—RH	17H 7757§	11	1					
Expander assembly—LH	17H 7758§	12	1					
Body—expander	NSP		2					
Lever	17H 7759§	13	2					
Boot (rubber)	7H 7572	14	2					
Piston	17H 7760§	15	2					
Pin—wrist	7H 7570	16	2					WSE use 18G 8006
Pin—wrist—with seals	†18G 8006§		2 sets					
Pin—wrist	†27H 4642		2					
Seal	†27H 3977		4					
Retainer—seal	†17H 2201		4					
Circlip	†7H 7385		4					
Bisector and fork assembly	8G 8572§	18	2					
Fork assembly	17H 7752	19	2					
Fork	†NSP	20	2					Was 7H 7603
Pin—pivot selector	7H 7605	21	2					
Segment	7H 7604	22	4					
Pin—fork	7H 7607	23	2					
Retainer—segment	7H 7606	24	4					
Spring	7H 7315	25	2					
Body—bisector	NSP		2					
Retainer—spring	†NSP§	26	2					Was 17H 7753
Tappet	†NSP§	27	4					Was 17H 7754
Pin—mills	†NSP§	28	4					Was 17H 7831
Cover	†NSP§	29	2					Was 17H 7756
Bolt—cover	HBN 0520	30	8					
Washer—shakeproof—bolt	LWN 405	31	8					Part No. change; was 7H 7462
Spring—shoe pull-off	7H 7818	32	4					
Pin—steady	7H 7594	33	4					
Washer—shakeproof—pin	†NSP	34	4					Was 27H 7464
Nut—pin	FNN 208	35	4					
Screw—bisector fixing	HNS 0806	36	4					
Washer—shakeproof—screw	LWN 208	37	4					
Drum—brake—hand **†10/42, 3DL, 342**	ATJ 7169§	38	2					Part No. change; was 7H 7370
Drum—brake—hand **†10/60, 4DM, 460**	ATJ 7170§	39	2					
Screw—retaining	CMZ 0612	40	4					

§ Parts peculiar to Tractor only

See title-page for application

†Revised Information. Issue 2

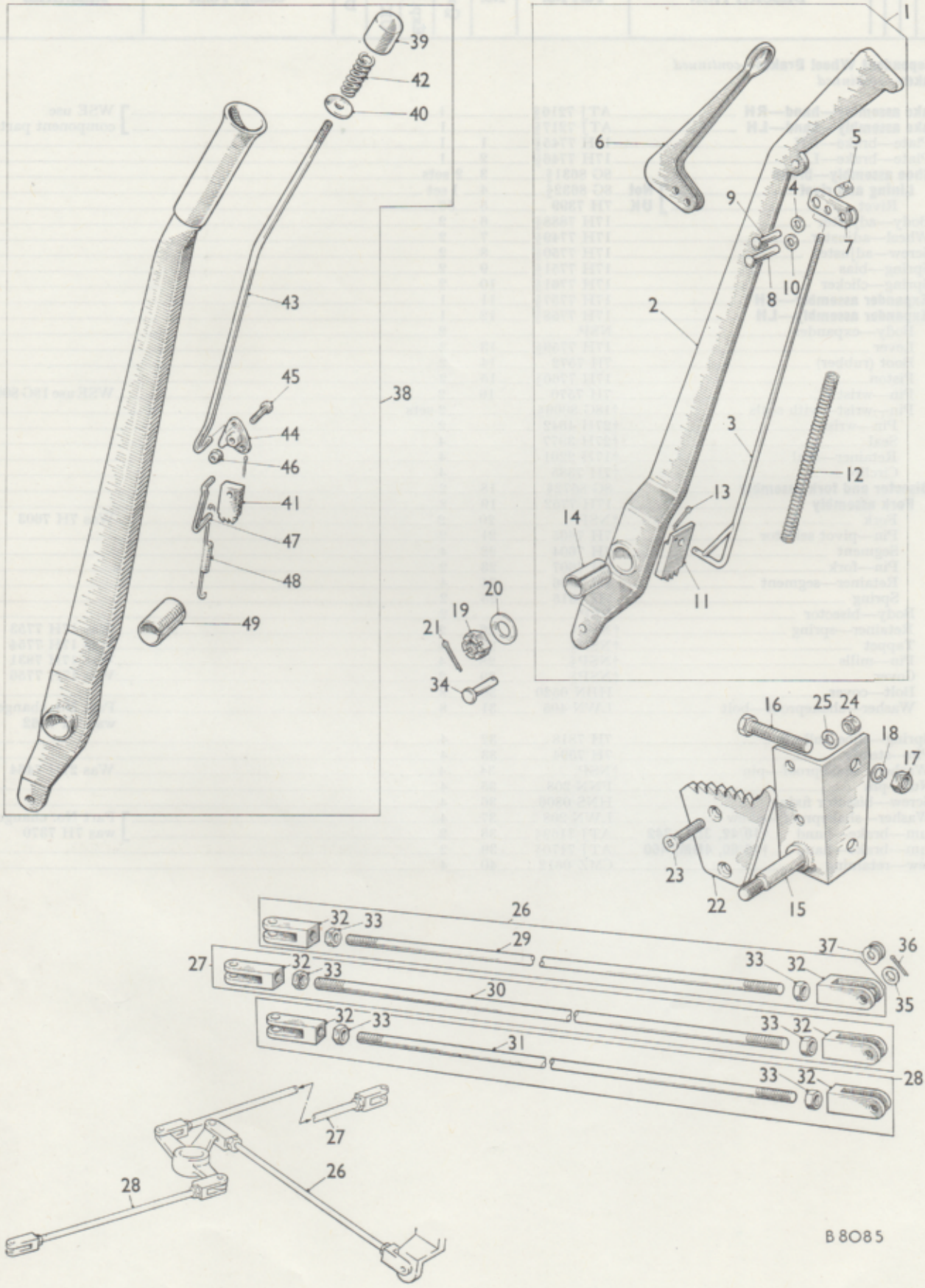
1
2
3
4
5
6
7
8
9
10
11
12
13
14
15
16
17
18
19
20
21
22
23
24
25
26
27
28
29
30
31
32
33
34
35
36
37
38
39
40
41
42
43
44
45
46
47
48
49
B 8085

DESCRIPTION	Part No.	Illus. No.	Quantity	Stock recommds. DIST. Exp.	UK	D	Change Point	REMARKS
Independent Wheel Brakes—*continued*								
HANDBRAKE LINKAGE								
Lever assembly—handbrake	NT 6644§	1	1					
Lever	AAK 3000	2	1					
Rod—pawl	AAK 5328	3	1					
Washer—spring	AAK 3002	4	2				3DL– 781–501 on	
Nipple—pawl rod	AAK 3003	5	1				772–501 on	
Latch	AAK 3004	6	1				4DM– 787–501 on	
Arm—latch pivot	AAK 3005	7	1				792–501 on	
Rivet—latch—large	RRS 0412	8	1				342– 24000 on 460– 24000 on	Part No. change; was AAK 3006
Rivet—latch—small	RRS 0315	9	1				†10/42–57420 to 81597 †10/60–57420 to 81597	Part No. change; was AAK 3007
Washer—latch (fibre)	AAK 3008	10	2					
Pawl	AAK 5329	11	1					
Spring	AMK 3214	12	1					
Pin—cotter	CPS 0204	13	1					
Bush—liner	AMK 3213	14	1					
Handbrake assembly	ATJ 5079§	38	1					
Push button—handle	†27H 7626§	39	1					Correction; was ATJ 7626
Washer—plain	†27H 7627§	40	1					Correction; was ATJ 7627
Pawl	†AAK 3009§	41	1					Correction; was AAK 5329
Spring—top	27H 7628§	42	1					
Rod—pawl—top	27H 7629§	43	1				†10/42 81598 on	
Lever—relay—with distance piece	27H 7630§	44	1				†10/60 81598 on	
Bolt—relay lever	27H 7640§	45	1					
Nut—bolt	27H 7641§	46	1					
Rod—pawl—bottom	27H 7642§	47	1					
Spring—bottom	27H 7643§	48	1					
Bush—lever	AMK 3213	49	1					
Plate—packing	†NSP		1					Correction; was 27H 7644
Bracket—hand brake support	NT 7472§	15	1					
Bolt—bracket	NT 5548§	16	2					
Nut—bolt	†ATJ 1081§	17	2					Part No. change; was FNN 109
Washer—spring—nut	LWN 209	18	2					
Nut—hand brake lever pivot	FNN 410	19	1					
Washer—plain—nut	PWN 110	20	1					
Pin—split	CPS 0412	21	1					
Ratchet	NT 7083§	22	1					
Screw—ratchet to support bracket	CMN 0616	23	2					
Nut—screw	FNN 106	24	2					
Washer—spring—nut	LWN 206	25	2					
Brake rod assemblies								
Hand brake to balance lever	ATJ 7210§	26	1					
RH brake to balance lever	ATJ 7208§	27	1					
LH brake to balance lever	ATJ 7212§	28	1					
Brake rods								
Hand brake to balance lever	ATJ 7211§	29	1					
RH brake to balance lever	ATJ 7209§	30	1					
LH brake to balance lever	ATJ 7213§	31	1					
Jaw—brake rod	NT 5545§	32	6					
Nut—jaw	FNN 106	33	6					
Pin—jaw	NT 3033§	34	6					
Washer—plain—pin	PWN 105	35	6					
Pin—split	CPS 0206	36	6					
Washer—Thackeray—hand lever jaw	AJD 7731	37	1					

§ Parts peculiar to Tractor only

See title-page for application

†Revised Information—Issue 3

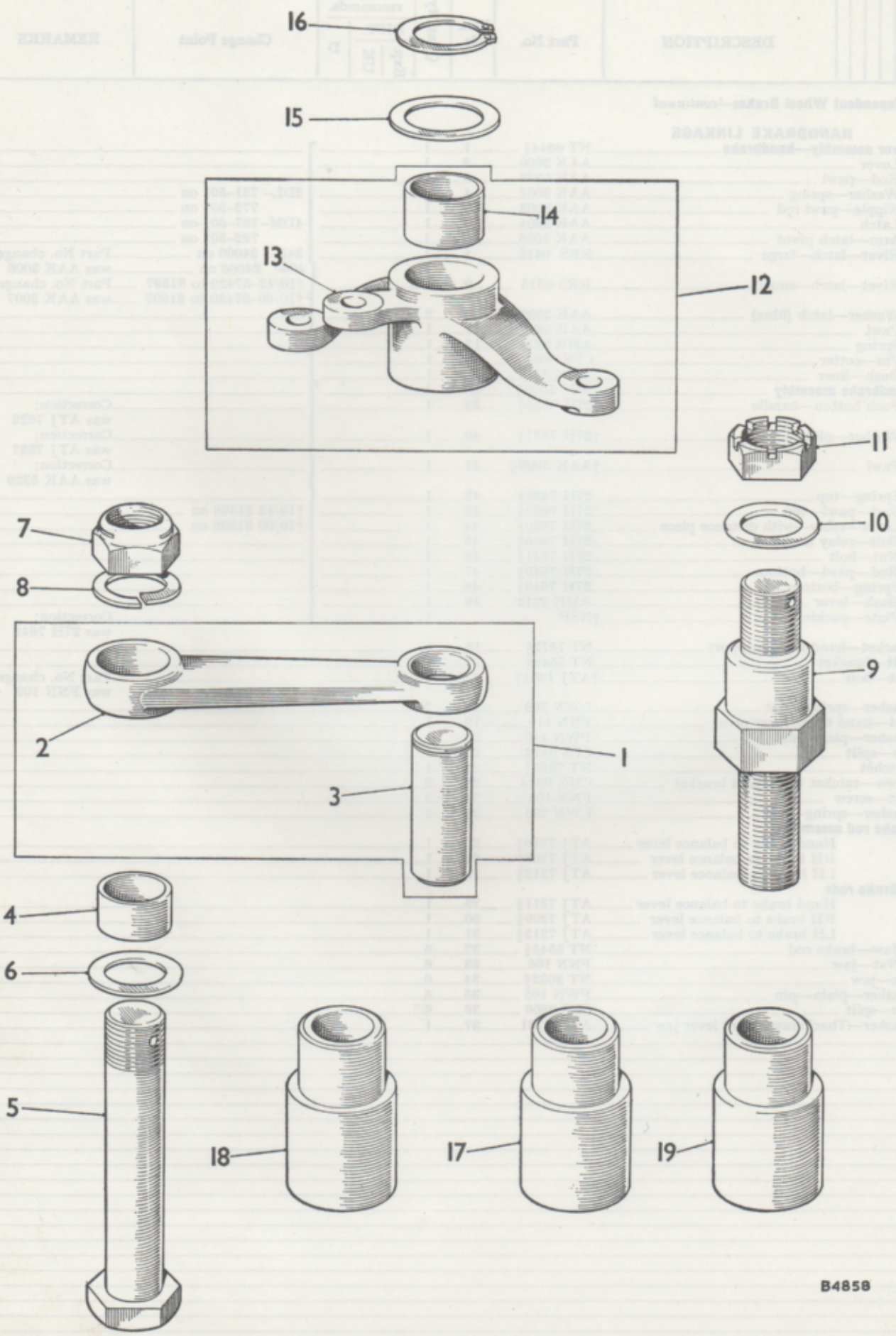
16
15
14
13
12
11
10
7
8
9
2
1
3
4
6
5
18
17
19
B4858

DESCRIPTION		Part No.	Illus. No.	Quantity	Stock recommds. DIST. Exp.	Stock recommds. DIST. UK	Stock recommds. D	Change Point	REMARKS
Independent Wheel Brakes—*continued*									
Handbrake Linkage—*continued*									
Sub-assembly—pivot arm and pin		ATJ 7177§	1	1					
Arm—pivot		ATJ 7178§	2	1					
Pin—pivot		ATJ 7179§	3	1					
Bush—pivot arm	**4DM, 3DL, 460, 342**	ATJ 7180§	4	1					
Bolt—pivot arm		HBN 1230	5	1					
Washer—plain—bolt		PWZ 112	6	1					
Nut—bolt		LNN 212	7	1					
Washer—spring	**10/42, 10/60**	LWZ 212	8	1					
Pin—compensator swivel		ATJ 7610§	9	1					
Washer—plain		PWZ 112	10	1					
Nut—slotted		FNZ 412	11	1					
Sub-assembly—brake balance lever		ATJ 7172§	12	1					
Lever		ATJ 7173§	13	1					
Bush		ATJ 1033§	14	2					
Washer—plain—pivot pin		ATJ 1045§	15	1					
Circlip—pivot pin		CCN 114	16	1					
Piece—distance	**4DM, 3DL, 342, 460**	ATJ 7181§	17	A/R					Required for tractors less drawbar
		ATJ 7360§	18	A/R					Replaces ATJ 7180 when tractor is fitted with I.P.T.O.
		ATJ7361§	19	A/R					Replaces ATJ 7180 when tractor is fitted with I.P.T.O. less drawbar

§ **Parts peculiar to Tractor only**

See title-page for application

TRAILER VACUUM BRAKING EQUIPMENT

	Page	Plate
†AUXILIARY DRIVE PULLEY	MR 72·1	R 57
CONTROL VALVE	MR 75	R 60
†EXHAUSTER	MR 72·1	R 57
OIL SEPARATOR	MR 73	R 58
QUICK DETACHABLE COUPLING	MR 76	R 61
VACUUM GAUGE BRACKET	MR 77	R 62
VACUUM PIPES	MR 77	R 62
VACUUM RESERVOIR	MR 74	R 59
VALVE OPERATING ROD AND LEVER ...	MR 75	R 60

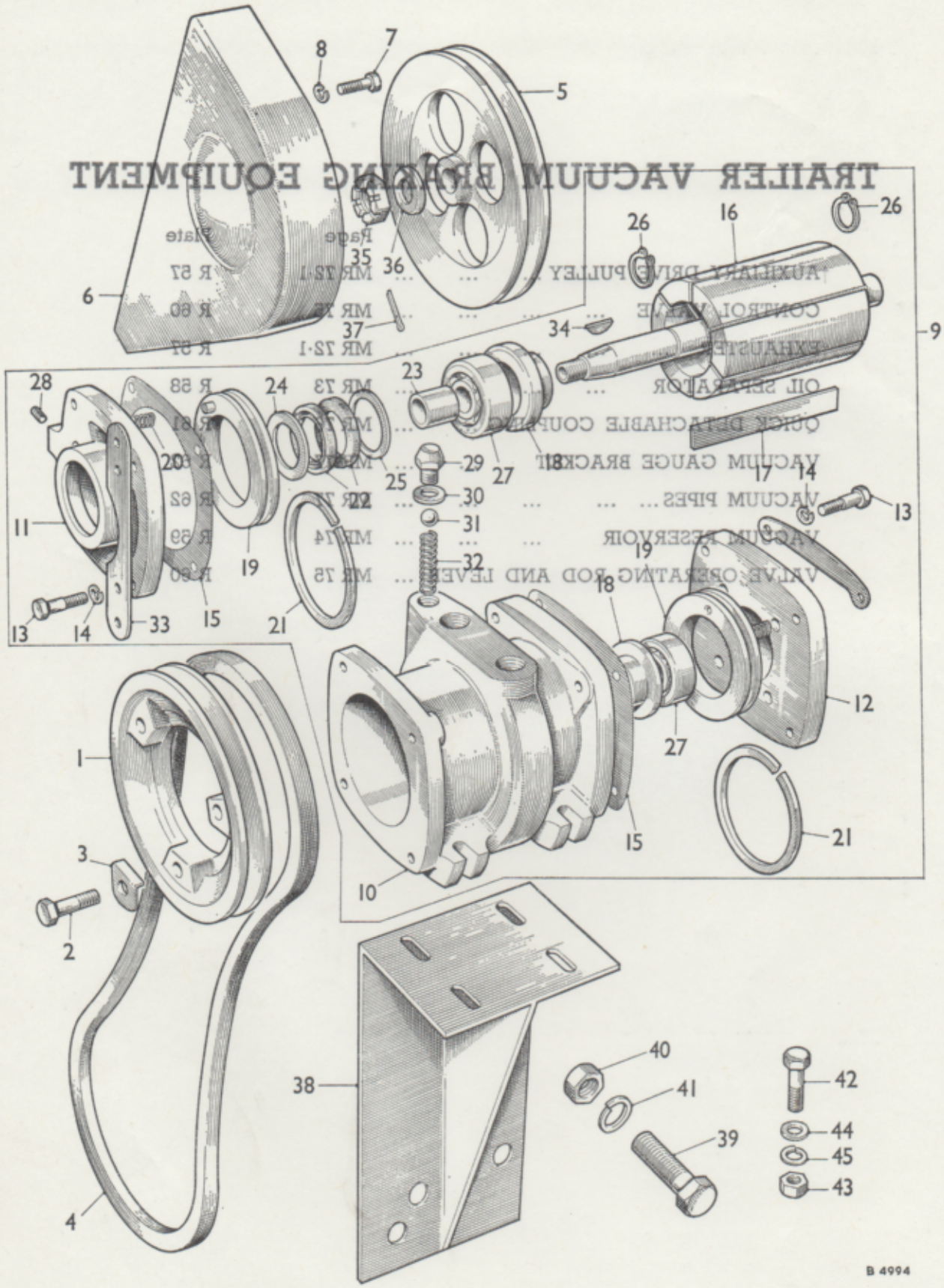
1
2
3
4
5
6
7
8
9
10
11
12
13
14
15
16
17
18
19
20
21
22
23
24
25
26
27
28
29
30
31
32
33
34
35
36
37
38
39
40
41
42
43
44
45
B 4994

DESCRIPTION	Part No.	Illus. No.	Quantity	Stock recommds. DIST. Exp.	Stock recommds. DIST. UK	Stock recommds. D	Change Point	REMARKS
TRAILER VACUUM BRAKING								
EQUIPMENT								
Kit—trailer vacuum braking **342, 460**	†ATJ 9503§		1					
Kit-trailer vacuum braking **10/42, 10/60**	†ATJ 9531§		1					
Pulley—auxiliary drive	ATJ 70§		1					
Bolt	HBN 0712	2	3					
Washer—tab	ATJ 71§	3	3					
Kit—vacuum braking equipment	ATJ 5010§		1 set					
Belt—exhauster drive	27H 5747§	4	1					
Pulley—exhauster	27H 5748§	5	1					
Cover—pulley	37H 5660§	6	1					
Bolt—cover fixing	37H 5654§	7	2					
Washer—spring	LWZ 202	8	2					
Exhauster assembly	27H 5749§	9	1					
Body—exhauster	27H 5750§	10	1					
Cover—drive end	27H 5751§	11	1					
Cover—rear end	27H 5752§	12	1					
Bolt—cover to body	27H 5753§	13	8					
Washer—spring—bolt	27H 5754§	14	8					
Joint—cover	27H 5755§	15	2					
Rotor and shaft	27H 5756§	16	1					
Blade—rotor	27H 5757§	17	6					
Ring—spigot	27H 5758§	18	2					
Plate—sealing (with peg)	27H 5759§	19	2					
Spring—sealing plate	7H 2547	20	8					
Ring—piston	27H 5760§	21	2					
Seal—metal insert	7H 2549	22	2					
Collar—shaft	27H 5762§	23	1					
Seal—backplate—outer	17H 5668	24	1					
Seal—backplate—inner	27H 5761§	25	1					
Circlip—shaft	27H 5763§	26	2					
Ball race	27H 5764§	27	2					
Screw—grub—cover	17H 5735	28	2					
Cap—snifter valve	27H 5765§	29	1					
Washer—cap (copper)	7H 2573	30	1					
Ball	BLS 112	31	1					
Spring—ball	17H 5693	32	1					
Bracket—support—pulley cover	27H 5766§	33	1					
Key—pulley	27H 5767§	34	1					
Nut—exhauster shaft	27H 5768§	35	1					
Washer—plain	PWZ 109	36	1					
Pin-split	ZPS 0310	37	1					
Bracket—exhauster mounting	27H 5769§	38	1					
Bolt—bracket to frame	37H 5648§	39	2					
Nut—bolt	37H 5649§	40	2					
Washer—spring—nut	37H 5650§	41	2					
Bolt—exhauster to bracket	37H 5662§	42	4					
Nut	FNZ 106	43	4					Part No. change; was 37H 5663
Washer—plain	7H 5686	44	4					
Washer—spring	LWN 206	45	4					Part No. change; was 7H 5706

§ Parts peculiar to Tractor only

See title-page for application

†Revised Information—Issue 2

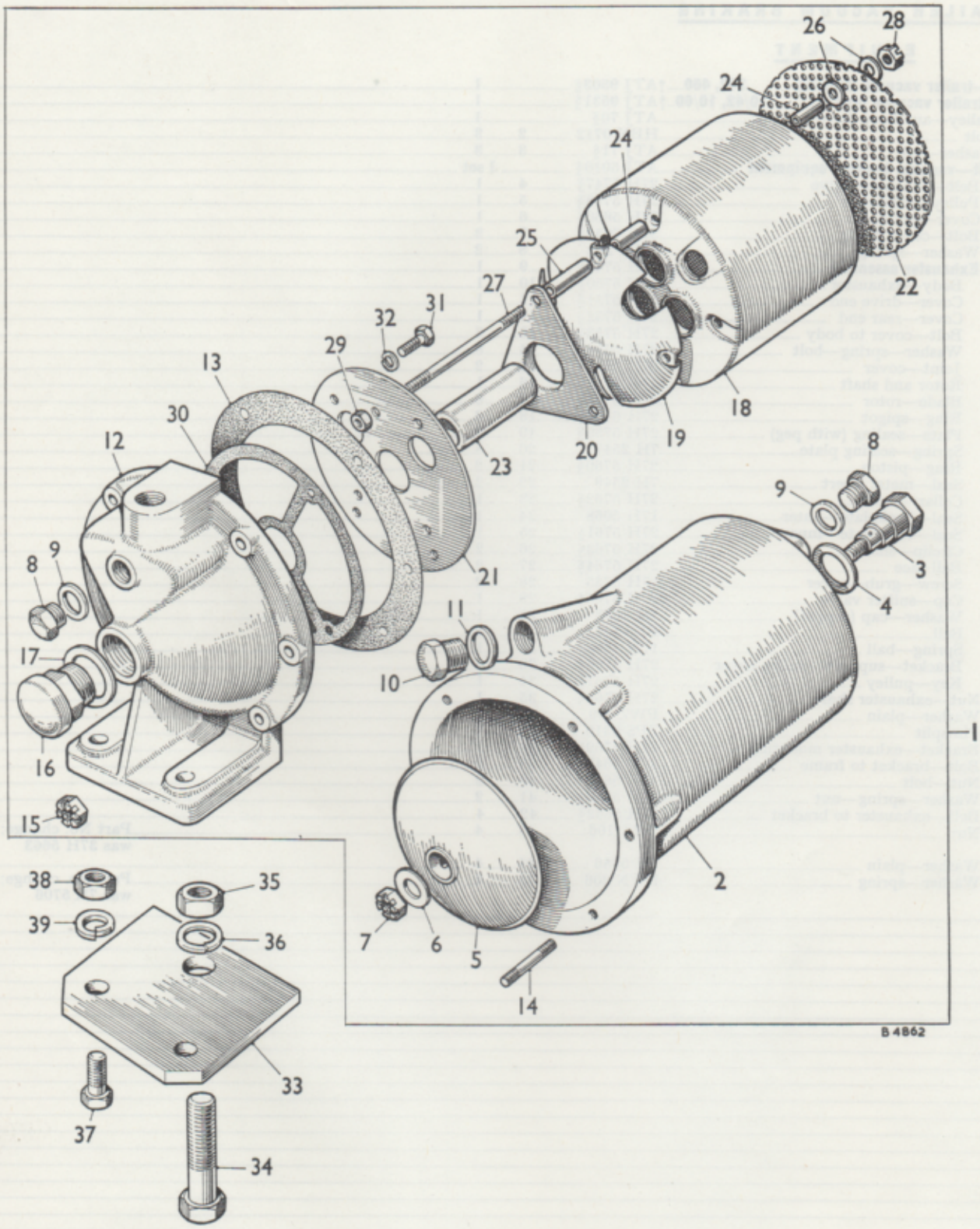

To face page MR 73

DESCRIPTION	Part No.	Illus. No.	Quantity	Stock recommds. DIST. Exp. / UK	Stock recommds. D	Change Point	REMARKS
Trailer Vacuum Braking Equipment—*continued*							
Separator assembly—oil	27H 5770§	1	1				
Body—separator	27H 5771§	2	1				
Adaptor—boss	27H 5772§	3	1				
Washer (copper)	27H 5773	4	1				
Filter—oil	27H 5774§	5	1				
Washer (steel)	27H 5775§	6	1				
Nut—slotted	27H 5776§	7	1				
Plug—cover	7H 2566	8	2				
Washer—plug (copper)	7H 2567	9	2				
Plug—filler	27H 5719	10	1				
Washer—plug (copper)	21K 8629	11	1				Part No. change; was 7H 2503
Cover—oil strainer	27H 5777§	12	1				
Joint—cover	27H 5778§	13	1				
Stud—cover to body	27H 5779§	14	6				
Nut—stud	27H 5780§	15	6				
Breather	27H 5781§	16	1				
Washer—breather (copper)	27H 5721	17	1				
Base—strainer	27H 5782§	18	1				
Cowl—strainer	27H 5783§	19	1				
Plate—oil drip	27H 5784§	20	1				
Plate—top—strainer	27H 5785§	21	1				
Gauze—strainer	27H 5786§	22	1				
Tube—air outlet	27H 5787§	23	3				
Piece—distance	27H 5788§	24	6				
Piece—distance	27H 5789§	25	3				
Washer—plain	27H 5790§	26	6				
Rod—screwed	27H 5791§	27	3				
Nut—rod	27H 5792§	28	3				
Nut—rod	27H 5793§	29	3				
Joint—base	27H 5794§	30	1				
Screw—top plate to cover	27H 5795§	31	4				
Washer—spring—screw	LWN 204	32	4				
Bracket—mounting—oil separator	27H 5796§	33	1				
Bolt—bracket to frame	37H 5648§	34	1				
Nut—bolt	37H 5649§	35	1				
Washer—spring—nut	37H 5650§	36	1				
Bolt—oil separator to bracket	37H 5651§	37	2				
Nut—bolt	37H 5652§	38	2				
Washer—spring—nut	37H 5653§	39	2				

§ Parts peculiar to Tractor only

See title-page for application

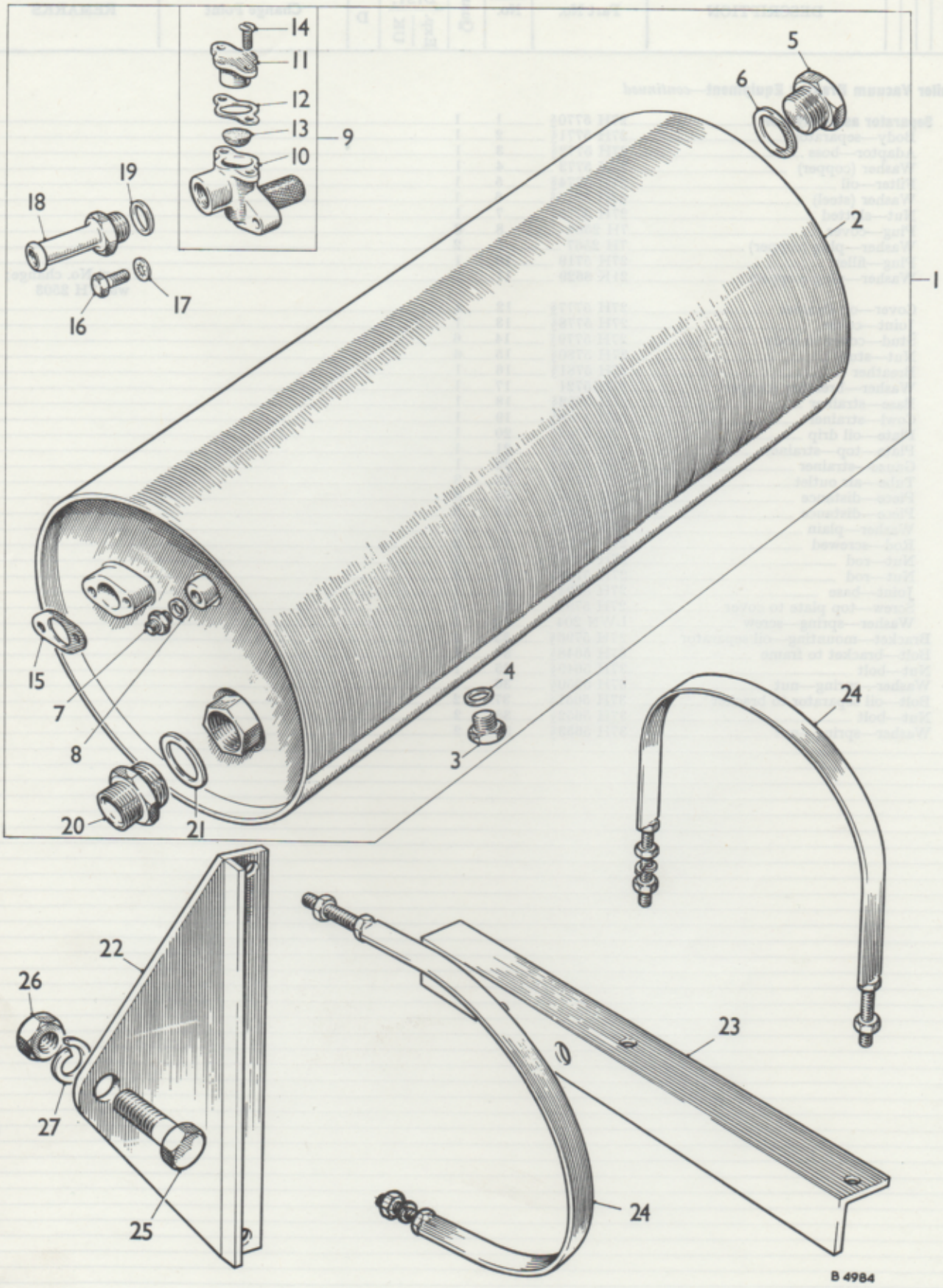

To face page MR 74

DESCRIPTION	Part No.	Illus. No.	Quantity	Stock recommds. DIST. Exp.	Stock recommds. DIST. UK	Stock recommds. D	Change Point	REMARKS
Trailer Vacuum Braking Equipment—*continued*								
Reservoir assembly—vacuum	27H 5797§	1	1					
Tank—reservoir	27H 5698	2	1					
Plug—drain	27H 5697	3	1					
Washer—plug (fibre)	27H 5696	4	1					
Plug—rear	27H 5695	5	1					
Washer—plug (fibre)	27H 5694	6	1					
Connection—hose	27H 5798§	7	1					
Washer—connection (fibre)	7H 5701	8	1					
Valve assembly—non-return	7H 5720	9	1					
Body—valve	27H 5688	10	1					
Cover—top	27H 5687	11	1					
Joint—cover	27H 5686	12	1					
Half-ball (rubber)	17H 5688	13	1					
Screw—cover	27H 5646	14	2					
Joint—valve body to tank	27H 5693	15	1					
Bolt—body to tank	27H 5692	16	2					
Washer—shakeproof—bolt	LWN 405	17	2					Part No. change; was 17H 5712
Union—valve	27H 5691	18	1					
Washer—union (fibre)	27H 5694	19	1					
Union—tank	27H 5799§	20	1					
Washer—union (fibre)	7H 5700	21	1					
Bracket—reservoir mounting	37H 5600§	22	1					
Bracket—reservoir mounting	37H 5601§	23	1					
Strap—reservoir mounting	37H 5602§	24	2					
Bolt—mounting bracket—front	37H 5648§	25	1					
Nut—bolt	37H 5649§	26	1					
Washer—spring—nut	37H 5650§	27	1					

§ Parts peculiar to Tractor only

See title-page for application

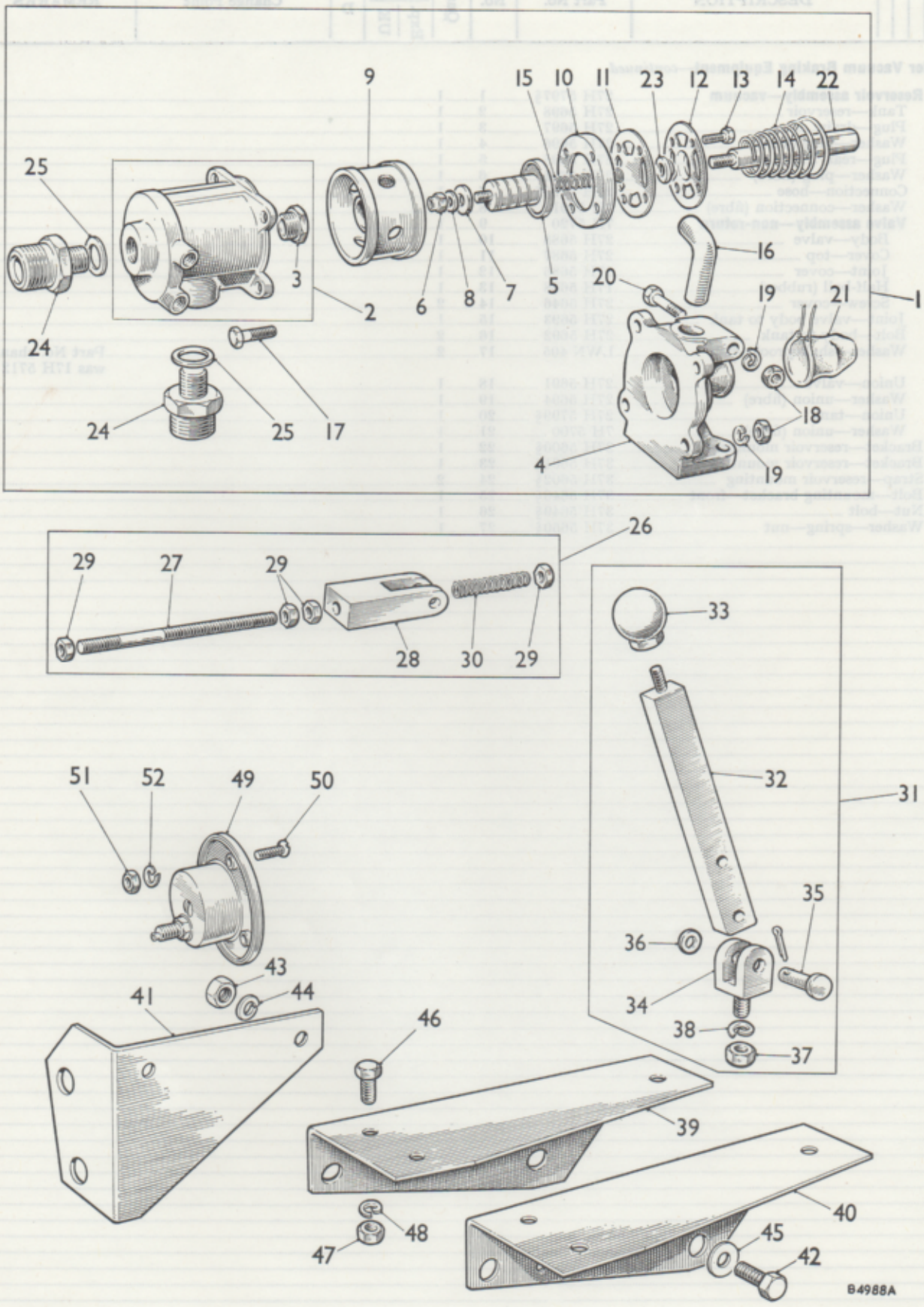
9
15
10
11
23
12
13
14
22
25
3
2
6
8
7
5
16
20
19
21
1
24
24
25
17
18
4
19
26
29
27
29
28
30
29
33
32
31
51
52
49
50
35
36
43
44
41
34
38
37
46
39
40
48
47
45
42
B4988A

DESCRIPTION	Part No.	Illus. No.	Quantity	Stock recommds. DIST. Exp.	Stock recommds. DIST. UK	Stock recommds. D	Change Point	REMARKS
Trailer Vacuum Braking Equipment—*continued*								
Valve assembly—control	37H 5603§	1	1					
Body assembly—valve	37H 5604§	2	1					
Seat—valve	37H 5605§	3	1					
Cover—end	37H 5606§	4	1					
Valve—vacuum	37H 5608§	5	1					
Nut—vacuum valve	7H 5712	6	1					
Disc—valve	7H 5647	7	1					
Washer—plain	7H 5681	8	1					
Valve—reaction	37H 5607§	9	1					
Cup—valve	37H 5609§	10	1					
Back plate—piston	37H 5610§	11	1					
Plate—piston attachment	37H 5611§	12	1					
Screw—plate	37H 5612§	13	4					
Spring—reaction valve	37H 5613§	14	1					
Spring—vacuum valve	37H 5614§	15	1					
Pipe—breather	37H 5615§	16	1					
Bolt—body to end cover	37H 5616§	17	4					
Nut—bolt	ATJ 8104	18	4					
Washer—spring	LWN 204	19	4					
Bolt—end cover—top	37H 5617§	20	1					
Nut—bolt	ATJ 8104§	18	1					
Washer—spring	LWN 204	19	1					
Gaiter—end cover	37H 5618§	21	1					
Rod—connecting—distributor	37H 5619§	22	1					
Rod end—valve connection	37H 5620§	23	1					
Union—control valve	37H 5621§	24	2					
Washer—union (fibre)	7H 5700	25	2					
Rod assembly—valve operating	37H 5622§	26	1					
Rod	37H 5744§	27	1					
Jaw	37H 5743§	28	1					
Nut	AJD 8104 Z	29	4					
Spring—control rod	37H 5745§	30	1					
Lever assembly—control	37H 5623§	31	1					
Lever	37H 5624§	32	1					
Knob	37H 5627§	33	1					
Fork—lever	37H 5625§	34	1					
Pin—fork to lever	37H5626§	35	2					
Washer—plain	PWZ 105	36	2					
Nut	AJD 8105 Z	37	1					
Washer—spring	LWZ 202	38	1					
Bracket—control valve and lever	**342,460**†37H 5628§	39	1					
Bracket—control valve and lever	†ATJ 5069§	40	1					
Bracket—adaptor—control valve	**10/42**†ATJ 5068§	41	1					
Screw	**10/60**†HNS 0508	42	2					
Nut	†FNN 505	43	2					
Washer—spring	†LWN 205	44	2					
Washer—plain	†PWN 305	45	1					
Bolt—control valve to bracket	†37H 5654§	46	2					
Nut	†FNZ 105	47	2					
Washer—spring	†LWZ 202	48	2					
Gauge—vacuum	†37H 5629§	49	1					
Screw—gauge to bracket	†37H 5656§	50	3					
Nut—screw	†37H 5657§	51	3					
Washer—spring—nut	†37H 5658§	52	3					

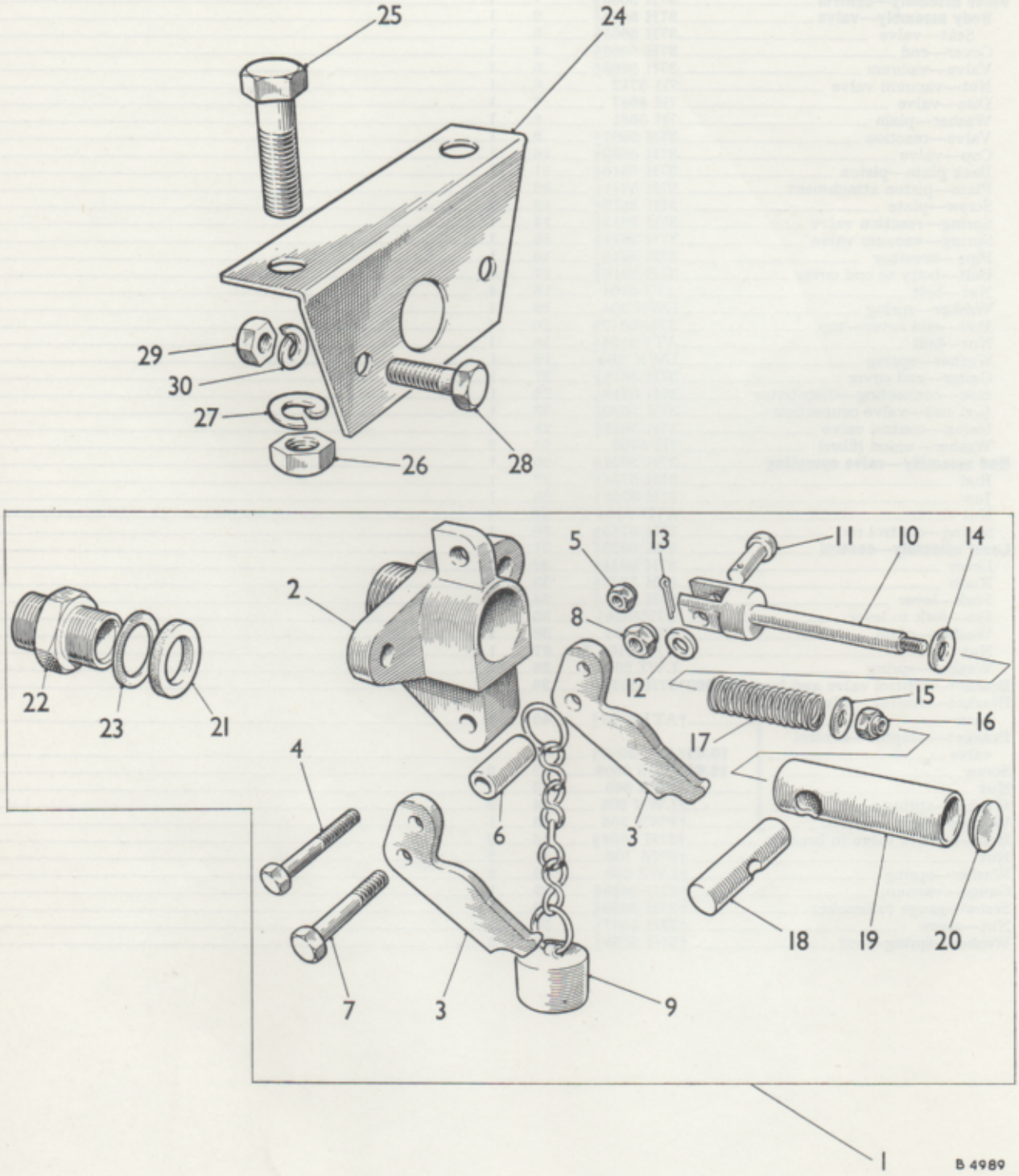

To face page MR 76

DESCRIPTION	Part No.	Illus. No.	Quantity	Stock recommds. DIST. Exp.	Stock recommds. DIST. UK	Stock recommds. D	Change Point	REMARKS
Trailer Vacuum Braking Equipment—*continued*								
Coupling—quick-detachable	37H 5630§	1	1					
Body—coupling	27H 5659§	2	1					
Swing link—coupling	27H 5660§	3	2					
Pin—swing link	27H 5661§	4	1					
Nut—pin	17H 3176	5	1					
Piece—distance—pin	27H 5662§	6	1					
Bolt—swing link	27H 5663	7	1					
Nut—bolt	2K 8829	8	1					Part No. change; was AJB 5125
Plug and chain	27H 5664§	9	1					
Fork	27H 5666§	10	1					
Pin—fork pivot	27H 5665§	11	1					
Washer—plain—pin	PWZ 105	12	1					
Pin—split	7H 5689	13	1					
Washer—plain—fork	37H 5631§	14	1					
Washer—plain—fork	37H 5632§	15	1					
Nut—fork	8K 1473	16	1					Part No. change; was 7H 5716
Spring—fork	27H 5667§	17	1					
Trunnion	27H 5668§	18	1					
Handle—fork	27H 5669§	19	1					
Plug—handle	27H 5670§	20	1					
Seat—valve	27H 5671§	21	1					
Union—coupling	27H 5731	22	1					
Washer—plain—union	27H 5729	23	1					
Bracket—coupling	37H 5633§	24	1					
Bolt—bracket to axle casing	37H 5648§	25	2					
Nut—bolt	37H 5649§	26	2					
Washer—spring—nut	37H 5650§	27	2					
Bolt—coupling to bracket	37H 5651§	28	2					
Nut—bolt	37H 5652§	29	2					
Washer—spring—nut	37H 5653§	30	2					

§ Parts peculiar to Tractor only

See title-page for application

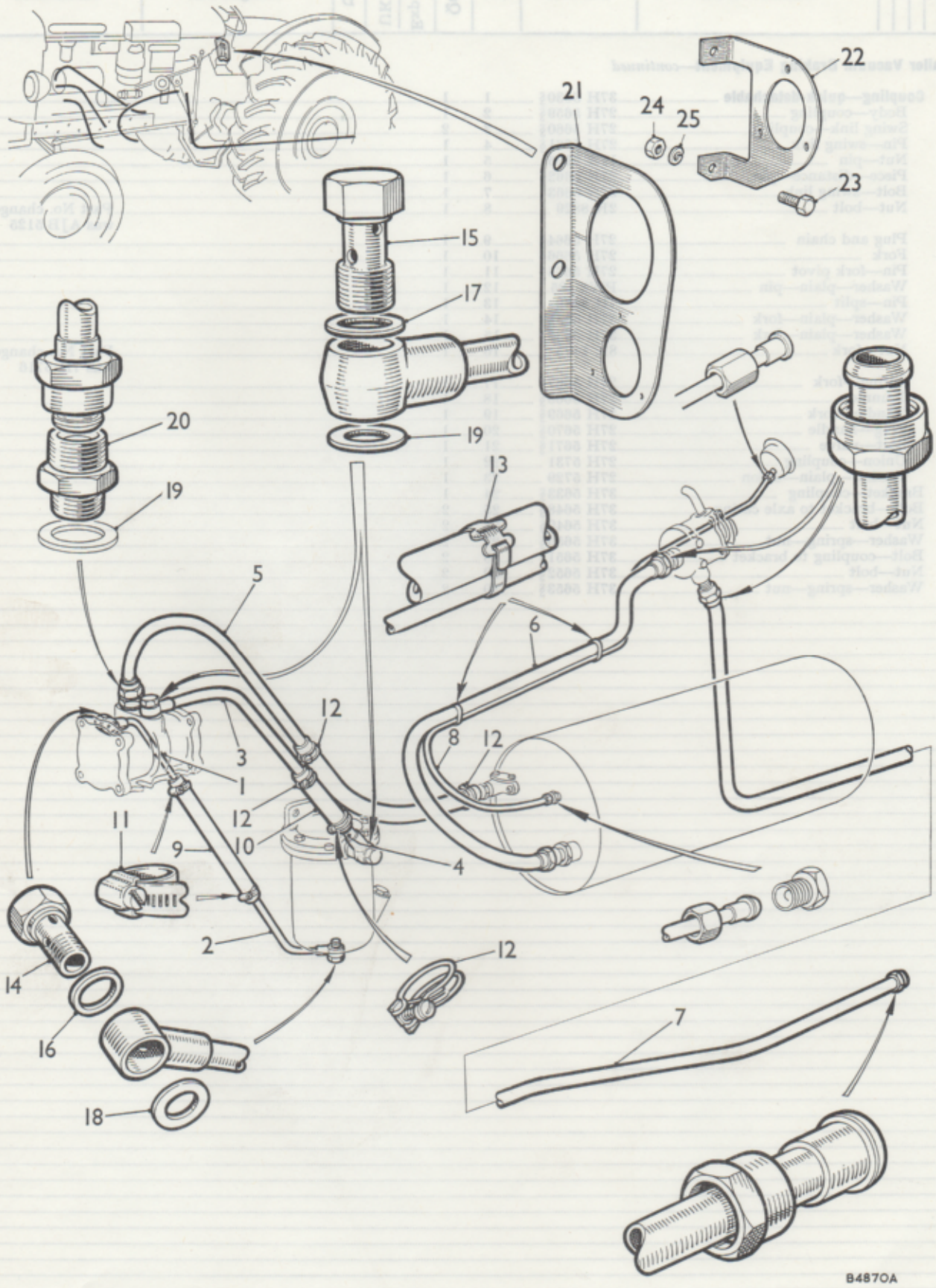
22
21
24
25
23
15
17
20
19
19
13
5
6
12
8
12
3
1
12
11
9
10
4
2
12
14
16
7
18
B4870A

DESCRIPTION	Part No.	Illus. No.	Quantity	Stock recommds. DIST. Exp.	Stock recommds. DIST. UK	Stock recommds. D	Change Point	REMARKS
Trailer Vacuum Braking Equipment—*continued*								
Pipes								
Oil inlet—exhauster	37H 5634§	1	1					
Oil inlet—separator	37H 5635§	2	1					
Oil return—exhauster	37H 5636§	3	1					
Oil return—separator	37H 5637§	4	1					
Vacuum—exhauster	37H 5638§	5	1					
Vacuum—reservoir to valve	37H 5645§	6	1					
Vacuum—valve to coupling	37H 5646§	7	1					
Vacuum—reservoir to gauge	37H 5647§	8	1					
Hose—oil inlet pipe	37H 5639§	9	1					
Hose—oil return and vacuum pipe	37H 5640§	10	1					
Clip								
Oil inlet pipe	37H 5641§		2					Not available; use 8G 531
Oil inlet pipe	8G 531	11	2					
Oil return and vacuum pipe	17H 5747		4					Not available; use HCS 116
Oil return and vacuum pipe	HCS 116	12	4					
Reservoir pipe to gauge pipe	37H 5661§	13	2					
Bolt—banjo								
Exhauster	37H 5642§	14	1					
Exhauster	37H 5644§	15	1					
Oil separator	37H 5642§	14	1					
Oil separator	37H 5644§	15	1					
Washer—banjo bolt								
Exhauster and separator	37H 5643§	16	2					
Exhauster and separator	7H 2569	17	2					
Exhauster and separator	7H 2573	18	2					
Exhauster and separator	21K 8629	19	2					
Adaptor—exhauster valve pipe	37H 5659§	20	1					
Washer—adaptor	21K 8629	19	1					
Bracket—vacuum gauge **342, 460**	†ATJ 5011§	21	1					
Bracket—vacuum gauge	†ATJ 5067§	22	1					
Screw **10/42**	†HNS 0406	23	2					
Nut **10/60**	†FNN 509	24	2					
Washer—spring	†LWN 204	25	2					

§Parts peculiar to Tractor only

See title-page for application

†Revised Information—Issue 3

		DESCRIPTION	Part No.	Illus. No.	Quantity	Stock recommde. DIST. UK	Stock recommde. DIST. grade	Stock recommde. D	Change Point	REMARKS
		Trailer Vacuum Braking Equipment—continued								
		Pipes								
		Oil inlet—exhauster	3TH 9034	1	1					
		Oil inlet—separator	3TH 2085	2	1					
		Oil return—exhauster	3TH 8839	3	1					
		Oil return—separator	3TH 2027	4	1					
		Vacuum—exhauster	3TH 2038	5	1					
		Vacuum—reservoir to valve	3TH 9044	6	1					
		Vacuum—valve to coupling	3TH 2040	7	1					
		Vacuum—reservoir to gauge	3TH 2047	8	1					
		Hose—oil inlet pipe	3TH 2070	9	1					
		Hose—oil return and vacuum pipe	3TH 9040	10	1					
		Clip								
		Oil inlet pipe	3TH 2041	2						Not available; use BC 631
		Oil inlet pipe	BC 631	11	2					
		Oil return and vacuum pipe	1TH 0747	4						Not available; use HCS 116
		Oil return and vacuum pipe	HCS 116	12	4					
		Reservoir pipe to gauge pipe	3TH 9040	13	2					
		Bolt—basic								
		Exhauster	3TH 2042	14	1					
		Exhauster	3TH 2044	15	1					
		Oil separator	3TH 2042	16	1					
		Oil separator	3TH 2044	18	1					
		Washer—basic bolt								
		Exhauster and separator	3TH 2042	16	2					
		Exhauster and separator	7H 2070	17	2					
		Exhauster and separator	7H 2073	18	2					
		Exhauster and separator	3TH 2039	19	2					
		Adapter—exhauster valve pipe	3TH 2049	20	1					
		Washer—adapter	3TH 2050	10	1					
		Bracket—vacuum gauge	3TH 2051	21	1					
		Bracket—vacuum gauge	1A17 2057	22	1					
		Screw	10 42×UNS 0606	23	2					
		Nut	10 60×UNS 0606	24	2					
		Washer—spring	10 VN 201	25	2					

POWER ASSISTED STEERING

	Page	Plate
†AUXILIARY DRIVE PULLEY	MR 78·1	R 63
DIRECT COUPLED UNIT	MR 80	R 65
DRAGLINK	MR 81	R 66
PIPES	MR 81	R 66
RESERVOIR	MR 79	R 64
†ROTOR PUMP	MR 78·1	R 63

†Revised Information—Issue 2

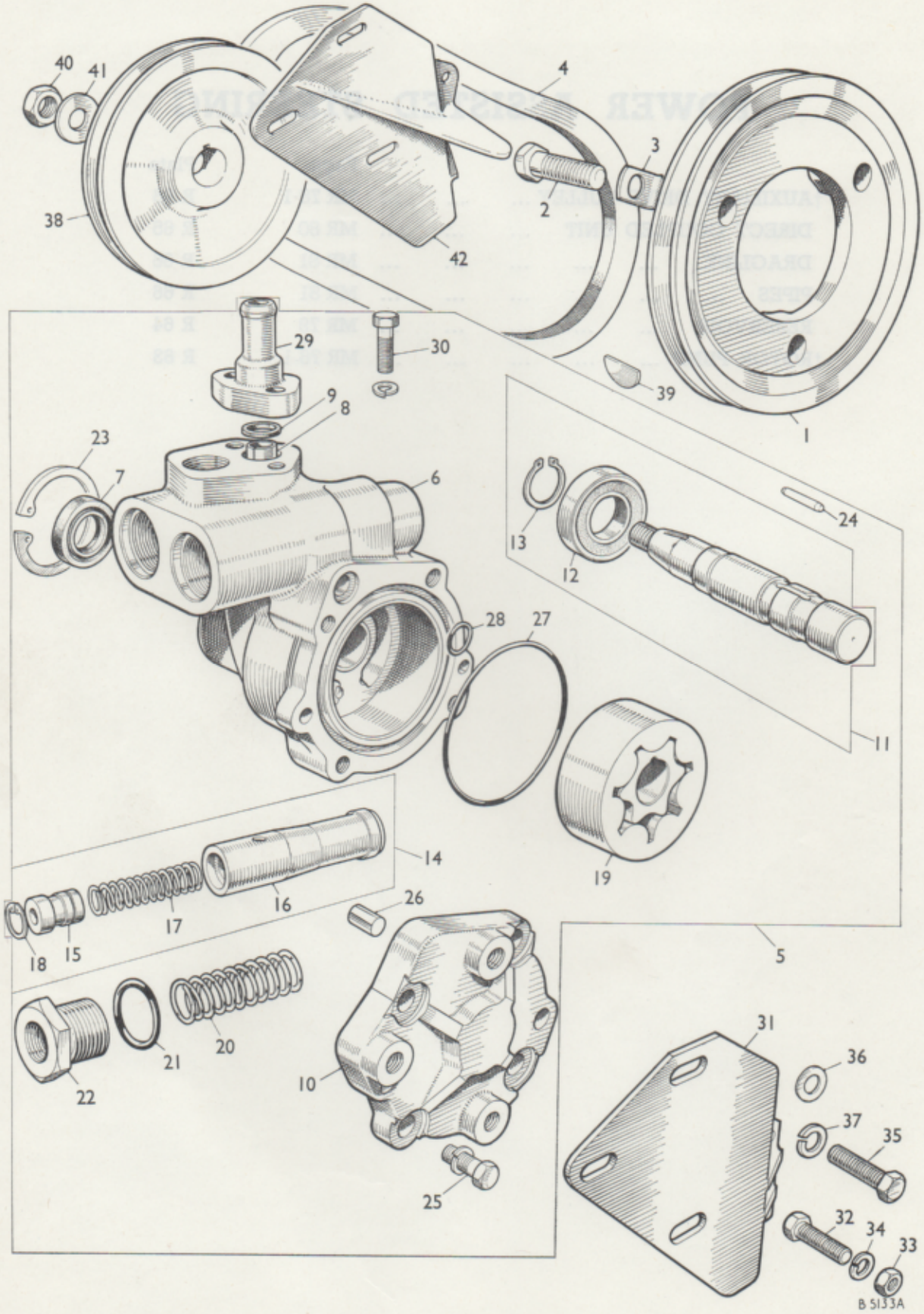
40
41
4
3
2
38
42
29
30
39
1
9
8
23
7
6
24
13
12
28
27
11
14
19
16
26
17
18
15
5
31
36
21
20
22
10
37
35
25
32
34
33
B 5133A

DESCRIPTION	Part No.	Illus. No.	Quantity	Stock recommds. DIST. Exp.	UK	D	Change Point	REMARKS
POWER ASSISTED STEERING								
Kit—power assisted steering								
4DM, 460, 10/60	ATJ 9488§		1				4DM–787–501 on 4DM–792–501 on 460–24000 on 10/60–57420 to 92219	WSE use ATJ 9516
10/60	ATJ 9516§		1				10/60 92220 on	
10/42	ATJ 9517§		1				10/42–92220 on	
Pulley—auxiliary drive	ATJ 70§	1	1					
Bolt—pulley to crankshaft pulley	HBN 0712	2	3					
Distance piece—crankshaft pulley	†ATJ 107§		1				10/60–92578 on	
Bolt—pulley to crankshaft pulley	†HBN 0714		3					
Washer—tab—bolt	ATJ 71§	3	3					
Belt—drive **4DM, 460, 10/60**	ATJ 4128§	4	1				4DM–787–501 on 4DM–792–501 on 460–24000 on 10/60–57420 to 92219	
Belt—drive **10/42, 10/60**	ATJ 4224§	4	1				10/42–92220 on 10/60–92220 on	
Pump assembly—rotor	ATJ 2000§		1					WSE use ATJ 2013
Pump assembly—rotor	ATJ 2013§	5	1					
Body—pump	17H 6466§	6	1					
Seal—oil	17H 6473§		1					WSE use 2H 450
Seal—oil	2H 4500	7	1					
Venturi	17H 720	8	1					
Gasket	17H 22	9	1					
Cover	17H 6471§	10	1					
Shaft assembly—drive	17H 6469§	11	1					
Bearing—shaft	17H 48	12	1					
Circlip—bearing	17H 6472§	13	1					
Valve assembly—relief	17H 6467§	14	1					
Valve—relief	17H 38	15	1					
Valve—flow control	17H 6470§	16	1					
Spring	17H 6464§	17	1					
Ring—retaining	17H 44	18	1					
Rotor	17H 6462§	19	1					
Spring—flow control	17H 35	20	1					
'O' ring	TRS 1317	21	1					Part No. change; was 17H 39
Cap—valve	17H 6465§	22	1					
Circlip	CCN 226	23	1					Part No. change; was 17H 27
Pin—drive—shaft	17H 10	24	1					
Screw—cover to pump body	17H 6463§	25	4					
Pin—dowel	17H 9	26	2					
'O' ring—body cover	17H 719	27	1					
'O' ring—by-pass	TRS 0912	28	1					Part No. change; was 17H 8
Adaptor	17H 6468§		1					WSE use 17H 9280
Adaptor	17H 9280§	29	1					
Screw—adaptor to body	17H 6340	30	2					
Bracket—rotor pump support	ATJ 4019§	31	1				4DM–787–501 on 4DM–792–501 on 460–24000 on 10/60–57420 to 92219	
Screw—bracket to engine front support bracket **4DM, 460, 10/60**	HNS 0506	32	2					
Nut—screw	FNN 105	33	2					
Washer—spring—nut	LWN 205	34	2					
Bracket—rotor pump support	ATJ 4225§	42	1				10/42–92220 on 10/60–92220 on	
Screw—bracket to engine front support bracket **10/42, 10/60**	HNS 0506	32	4					
Nut—screw	FNN 105	33	4					
Washer—spring—nut	LWN 205	34	4					
Screw—pump to bracket	HNS 0506	35	3					
Washer—plain—screw	PWN 105	36	3					
Washer—spring—screw	LWN 205	37	3					
Pulley—rotor pump **4DM, 460, 10/60**	ATJ 4022§	38	1				4DM–787–501 on 4DM–792–501 on 460–24000 on 10/60–57420 to 92219	
Pulley—rotor pump **10/42, 10/60**	ATJ 4223§	38	1				10/42–92220 on 10/60–92220 on	
Key—pulley to shaft	WKN 405	39	1					
Nut—pulley	FNN 107	40	1					
Washer—plain—nut	PWN 107	41	1					

§ Parts peculiar to Tractor only

See title-page for application

†Revised Information. Issue 3

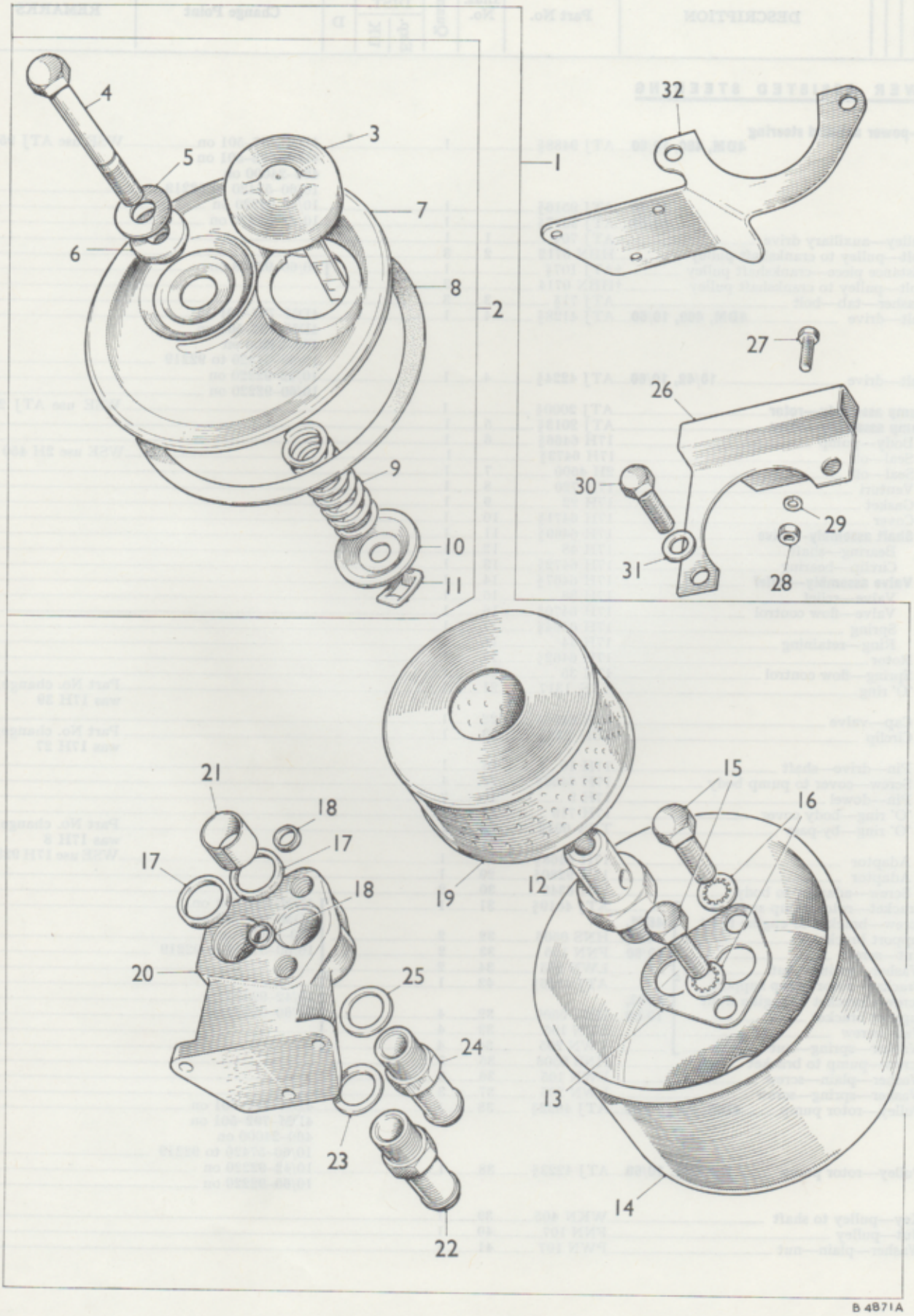
4
3
5
7
6
8
2
9
10
11
32
1
27
26
30
29
31
28
21
18
17
17
18
20
25
24
23
22
19
12
15
16
13
14
B 4871A

DESCRIPTION	Part No.	Illus. No.	Quantity	Stock recommds. DIST. Exp.	UK	D	Change Point	REMARKS
Power Assisted Steering—*continued*								
Reservoir assembly	1K 6343	1	1					Part No. change; was ATJ 2001
Reservoir sub-assembly	17H 6195		1					Not available; use component parts
Cover assembly—reservoir	17H 12	2	1					
Cap—filler	17H 28	3	1					
Stud—cover	17H 17	4	1					
Washer—plain—stud	17H 21	5	1					
Gasket—stud	17H 24	6	1					
Cover—reservoir	17H 14	7	1					
Gasket—cover (rubber)	17H 13	8	1					
Spring	17H 25	9	1					
Cap—filter	17H 18	10	1					
Clip—cap retaining	17H 6169	11	1					
Stud—reservoir	17H 20	12	1					
Plate—reinforcement	17H 16	13	1					
Reservoir	17H 15	14	1					
Screw—reservoir to body	NCS 0506	15	2					
Washer—shakeproof—screw	LWN 405	16	2					
Gasket—reservoir to body	17H 22	17	2					
Gasket—reservoir to body	17H 23	18	2					
Filter	17H 46	19	1					
Bracket	17H 6172	20	1				4DM–787–501, 792–501 to ▼	
Bracket	27H 4816	20	1				4DM, 460, 10/60–▼ on	
Retainer—gasket	17H 43	21	1					
Adaptor	17H 6173	22	1				4DM–787–501, 792–501 to ▼	
Washer—sealing—adaptor	17H 6174	23	1					
Adaptor	17H 6175	24	1					
Washer—sealing—adaptor	17H 6176	25	1					
Adaptor	27H 4815	22	1				4DM, 460, 10/60–▼ on	
'O' ring	27H 4817	23	1					
Adaptor	27H 4814	24	1					
'O' ring	27H 4818	25	1					
Bracket—reservoir support **4DM, 460, 10/60**	†ATJ 4018§	26	1					
Bracket—reservoir support **10/42**	†ATJ 4201§	32	1					
Screw—bracket to serervoir	HNS 0408	27	3					
Nut—screw	FNN 104	28	3					
Washer—spring—nut	LWN 204	29	3					
Screw—bracket to thermostat housing	HNS 0510	30	2					
Washer—plain—screw	PWN 105	31	4					

§ **Parts peculiar to Tractor only**

See title-page for application

▼ Change point not available
†**Revised Information—Issue 2**

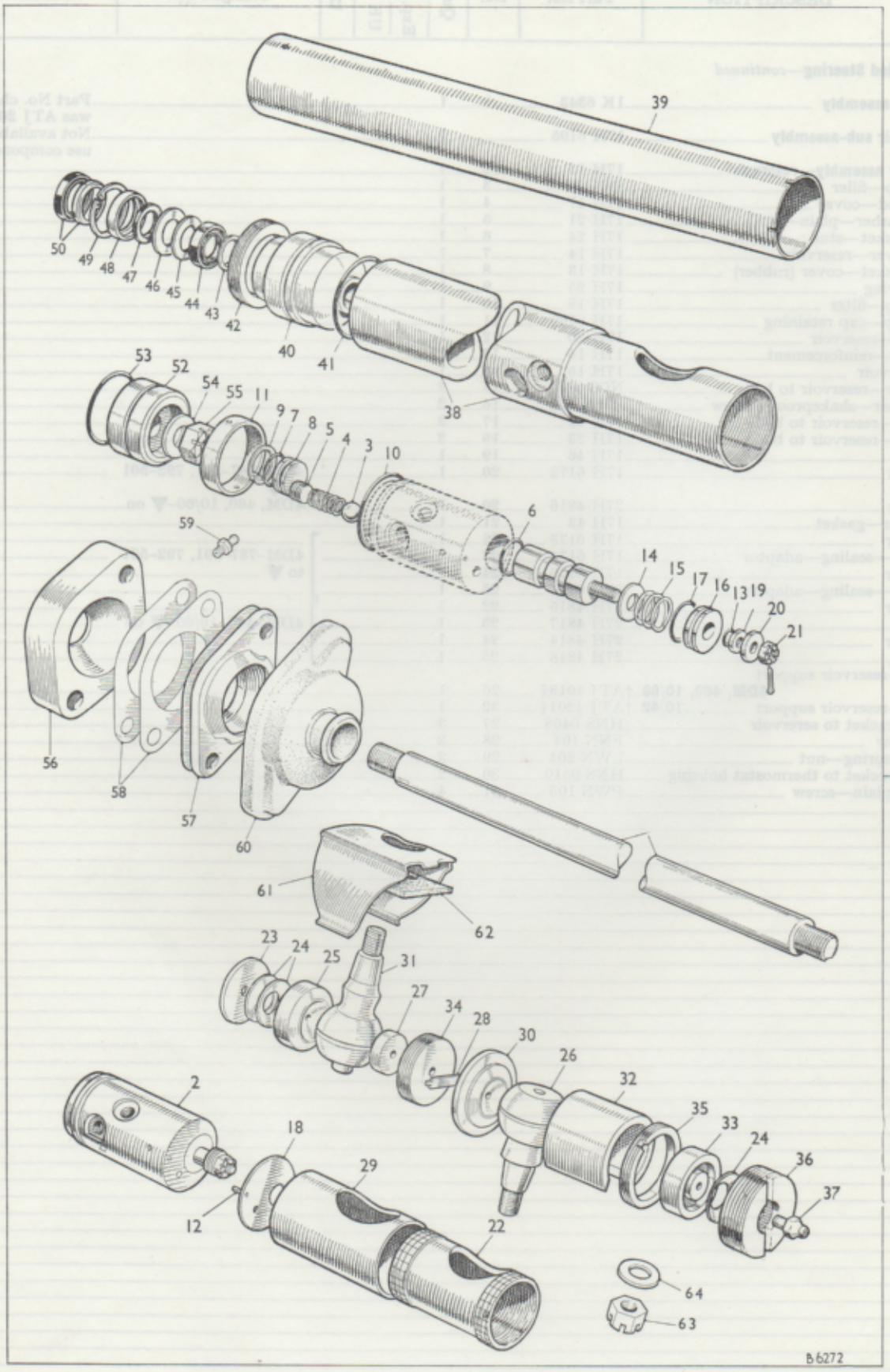
39
50
49
48
47
46
45
44
43
42
40
41
38
53
52
54
55
11
9
7
8
5
4
3
10
6
59
14
15
17
16
13
19
20
21
56
58
57
60
1
61
62
23
24
25
31
27
34
28
30
26
32
35
33
24
36
37
2
18
29
12
22
64
63
B6272

DESCRIPTION	Part No.	Illus. No.	Quantity	Stock recommds. DIST. Exp.	Stock recommds. DIST. UK	Stock recommds. D	Change Point	REMARKS
Power Assisted Steering—*continued*								
Unit assembly—direct-coupled	ATJ 2002§	1	1					WSE use ATJ 2090
Valve body and spool—relief	17H 6428§	2	1					WSE use 27H 3765
Valve body and spool—relief	†27H 3765	2	1					
Ball	BLS 108	3	1					Part No. change; was 17H 6044
Spring—relief valve	17H 6045	4	1					
Plug—relief valve	17H 6046	5	1					
Cover—end	17H 6050	8	1					
Circlip—cover	AAA 81	9	1					Part No. change; was 17H 6051
Collar—locating—valve body	17H 6429§	11	1					
Pin—locating	17H 6047	12	3					
Washer—reaction—spool	17H 6431§	14	1					
Spring—reaction	17H 6432§	15	1					
Ring—reaction	17H 6433§	16	1					
Spacer	17H 6434§	18	1					
Collar—spool	17H 6435§	19	1					
Washer—plain	17H 6062	20	2					
Nut	AJD 8405 N	21	1					
Sleeve—operating	17H 6436§	22	1					
Washer—backing—sleeve	17H 6078	23	1					
Washer—Belleville	17H 6079	24	4					
Cup—ball pin	17H 6080	25	1					
Pin—ball—power	17H 6437§	26	1					
Holder—ball cup	17H 6370	27	1					
Clip—spring locking	17H 6369	28	1					
Sleeve—locating	17H 6063	29	1					
Cup—ball pin	17H 6084	30	1					
Pin—ball—manual	17H 6438§	31	1					
Spacer—ball cup	17H 6086	32	1					
Cup—ball	17H 6088	33	1				†4DM–787–501 on	
Holder—ball cup	17H 6371	34	1				792–501 on	
Ring—lock	17H 6087	35	1				460–24000 on	
Cover—end	17H 6089	36	1				10/60–57420 to	
Greaser	UHN 400	37	1				92219	
Tube—outer	17H 6439§	38	1					
Tube—inner	17H 6440§	39	1					
Bearing	17H 6441§	40	1					
Ring—bearing lock	17H 6442§	42	1					
Washer—plain	17H 6073	46	1					
Housing—scraper	17H 6356	48	1					
Circlip—housing	CCN 221	49	1					
Rod—piston	17H 6444§	51	1					
Piston	17H 6445§	52	1					
Washer—plain	17H 6069	54	1					
Nut	FNN 408	55	1					Part No. change; was 17H 6129
Cup—anchor ball—outer	17H 6453§	56	1					
Cup—anchor ball—inner	17H 6452§	57	1					
Shim—anchor ball cup								
·002″ (·051mm)	17H 6447§	58	A/R					
·005″ (·127mm)	17H 6554§	58	A/R					
·010″ (·254mm)	17H 6555§	58	A/R					
Greaser	UHN 400	59	1					Part No. change; was 17H 6448
Cover—spring	17H 6092	61	2					
Nut	FNN 410	63	2					
Washer—plain	PWN 110	64	2					
Kit—unit seal repair	†18G 8340		1					
'O' ring								
Valve body	†NSP	6	1					Was 17H 6048
Valve body	†NSP	7	1					Was 17H 6049
Valve body—outer	†17H 6052	10	1					
Valve body spool	†NSP	13	1					Was 17H 6430
Reaction ring	†17H 6057	17	1					
Bearing	†7H 6649	41	1					
Spacer—gland	†17H 6498	43	1					
Ring—gland	†NSP	44	1					Was 7H 6633
Washer—plain	†17H 6074	45	1					
Scraper (rubber)	†17H 6357	47	1					
Scraper—lip	†17H 6443	50	1					
Ring—piston	†17H 6446	53	1					
Cover—abutment	†17H 6449	60	1					
Pad—grease retainer	†17H 6091	62	2					

§ Parts peculiar to Tractor only

See title-page for application

†Revised Information. Issue 4

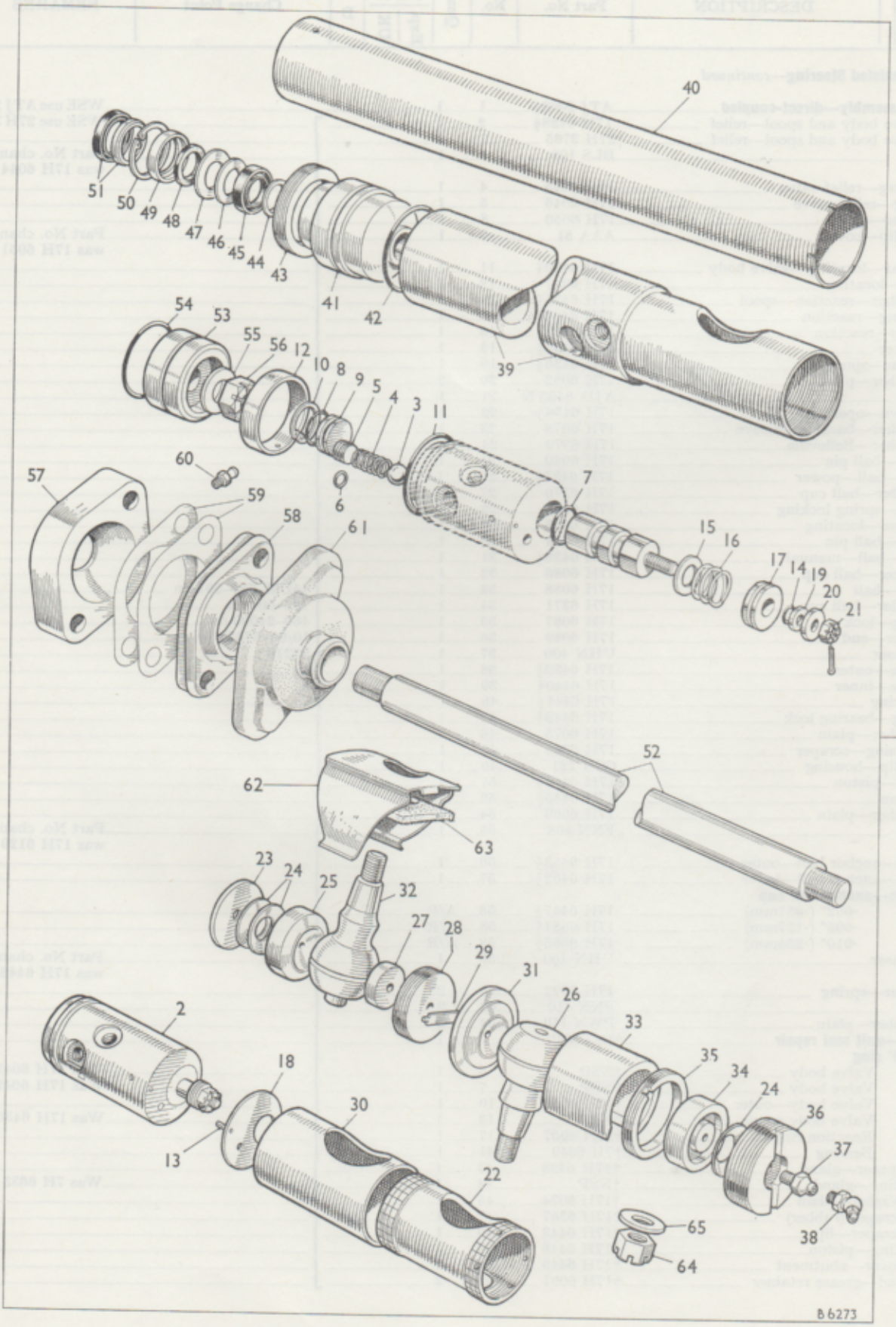
40
51
50
49
48
47
46
45
44
43
41
42
39
54
53
55
56
12
10
8
9
5
4
3
11
60
57
59
6
58
61
7
15
16
17
14
19
20
21
1
52
62
63
23
24
25
32
27
28
29
31
26
2
33
35
34
24
36
18
30
13
37
22
65
38
64
B 6273

DESCRIPTION	Part No.	Illus. No.	Quantity	Stock recommds. DIST. Exp.	Stock recommds. DIST. UK	Stock recommds. D	Change Point	REMARKS
Power Assisted Steering—*continued*								
Unit assembly—direct-coupled	†ATJ 2090§	1	1					
Valve body and spool—relief	†27H 4734§	2	1					
Ball—relief valve	†BLS 108	3	1					
Spring—relief valve	†17H 6045	4	1					
Plug—relief valve	†27H 4735§	5	1					
Cover—end	†17H 6050	9	1					
Circlip—cover	†AAA 81	10	1					
Collar—locating—valve body	†17H 6429§	12	1					
Pin—locating	†17H 6047	13	3					
Washer—reaction—spool	†27H 4738§	15	1					
Spring—reaction	†17H 6055	16	1					
Washer—reaction	†27H 4738§	17	1					
Spacer	†17H 6059§	18	1					
Collar—spool	†27H 4739§	19	1					
Washer—plain	†17H 6062	20	2					
Nut	†AJD 8405 N	21	1					
Sleeve—operating	†27H 4740§	22	1					
Washer—backing—sleeve	†17H 6078	23	1					
Washer—Belleville	†17H 6079	24	4					
Cup—ball pin	†17H 6080	25	1					
Pin—ball—power	†17H 6437§	26	1					
Holder—ball cup	†27H 3992§	27	1				10/60– on 92220	
Input—ball cup	†17H 6370§	28	1				10/42 92220 on	
Clip—spring locking	†17H 6369	29	1					
Sleeve—locating	†17H 6063	30	1					
Cup—ball pin	†17H 6084	31	1					
Pin—ball—manual	†17H 6438§	32	1					
Spacer—ball cup	†17H 6086	33	1					
Cup—ball	†17H 6088	34	1					
Ring—lock	†17H 6087	35	1					
Cover—end	†17H 6089	36	1					
Greaser	†UHN 400	37	1					
Greaser—end—outer tube	†27H 4741§	38	1					
Tube—outer	†17H 6439§	39	1					
Tube—inner	†17H 6440§	40	1					
Bearing	†17H 6441§	41	1					
Ring—bearing lock	†17H 6442§	43	1					
Washer—plain	†17H 6073	47	1					
Housing—scraper	†17H 6356	49	1					
Circlip—housing	†CCN 221	50	1					
Rod—piston	†17H 6444§	52	1					
Piston	†17H 6445§	53	1					
Washer—plain	†17H 6069	55	1					
Nut	†FNN 408	56	1					
Cup—anchor ball—outer	†17H 6453§	57	1					
Cup—anchor ball—inner	†17H 6452§	58	1					
Shim—anchor ball cup								
·002″ (·051mm)	†17H 6447§	59	A/R					
·005″ (·127mm)	†17H 6554§	59	A/R					
·010″ (·254mm)	†17H 6555§	59	A/R					
Greaser	†UHN 400	60	1					
Cover—spring	†17H 6092	62	2					
Nut	†FNN 410	64	2					
Washer—plain	†PWN 110	65	2					
Kit—unit seal repair	†18G 8339							
'O' ring								
Relief valve plug	†27H 4736	6	1					
Valve body	†NSP	7	1					Was 17H 6048
Valve body	†NSP	8	1					Was 17H 6049
Valve body—outer	†17H 6052	11	1					
Valve body spool	†27H 4737	14	1					
Bearing	†7H 6649	42	1					
Spacer—gland	†17H 6498	44	1					
Ring—gland	†NSP	45	1					Was 7H 6633
Washer—plain	†17H 6074	46	1					
Scraper (rubber)	†17H 6357	48	1					
Scraper—lip	†17H 6443	51	1					
Ring—piston	†17H 6446	54	1					
Cover—abutment	†17H 6449	61	1					
Pad—grease retainer	†17H 6091	63	2					

§ Parts peculiar to Tractor only

See title-page for application

†Revised Information. Issue 2

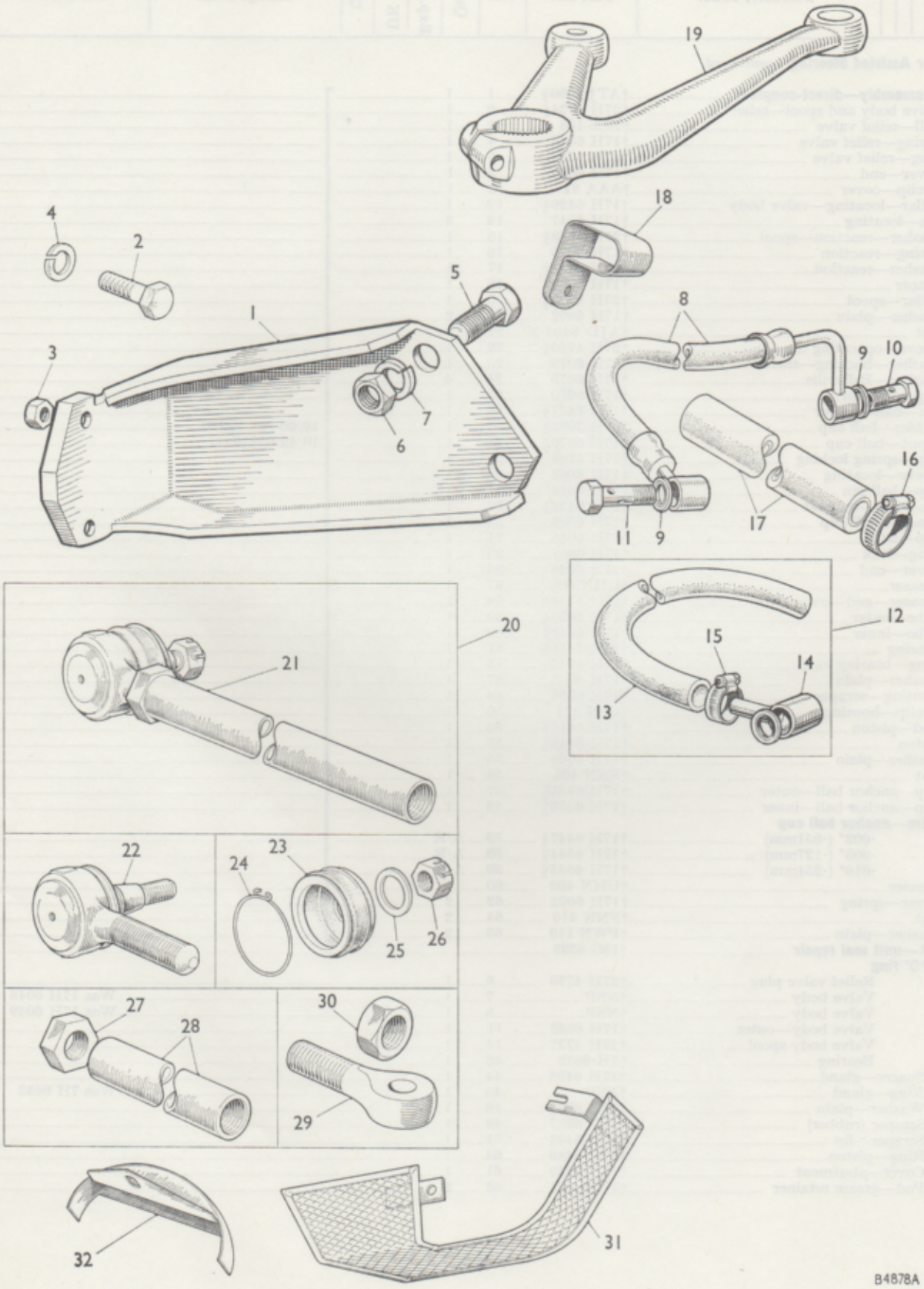
19
18
4
2
5
1
8
3
9
10
7
6
16
17
11
9
20
12
21
15
14
13
22
23
24
25
26
27
28
30
29
32
31
B4878A

DESCRIPTION	Part No.	Illus. No.	Quantity	Stock recommds. DIST. Exp.	Stock recommds. DIST. UK	Stock recommds. D	Change Point	REMARKS
Power Assisted Steering—*continued*								
Bracket—ram abutment	ATJ 4092§	1	1					
Bolt	HBN 0720	2	2					
Nut	FNN 107	3	2					
Washer—spring	LWN 207	4	2					
Bolt—bracket to main frame	ATJ 4033§	5	2					
Nut	FNN 112	6	2					
Washer—spring	LWN 212	7	2					
Hose—high-pressure	ATJ 4091§	8	1					
Seal	ATJ 4041§	9	4					
Bolt—banjo—hose	ATJ 4039§	10	1					
Bolt—banjo—hose	ATJ 4036§	11	1					
Pipe assembly—flexible	ATJ 4031§	12	1					
Hose—low-pressure	ATJ 4034§	13	1					
Adaptor—hose	ATJ 4035§	14	1					
Clip	HCS 0507	15	1					Part No. change; was ATJ 4040
Bolt—banjo	ATJ 4036§	11	1				787–501 on	
Seal	ATJ 4041§	9	2				792–501 on	
Clip	HCS 0709	16	2				460–24000 on 10/60–57420 to ▼	Part No. change; was ATJ 4040
Pipe—low-pressure supply	ATJ 4032§	17	1					
Clip	HCS 0507	15	1					
Bracket—clip	ATJ 4038§	18	1					
Lever—steering and track rod	ATJ 4017§	19	1					
Draglink assembly	ATJ 4023§	20	1					
Draglink sub-assembly	ATJ 4024§	21	1					
Socket assembly—LH	7H 3657§	22	1					
Boot (rubber)	7H 3465	23	1					
Clip—boot	7H 3466	24	1					
Ring—boot	7H 3552	25	1					
Nut	FNZ 408	26	1					
Locknut—LHT	FNZ 2212	27	1					
Tube—intermediate	17H 3477§	28	1					
End—tube	ATJ 4025§	29	1					
Nut	FNZ 212	30	1					
Plate—jig	ATJ 9378§		1					
Guard—fan and belt	ATJ 4197§	31	1					
Guard—pulley	ATJ 4198§	32	1					

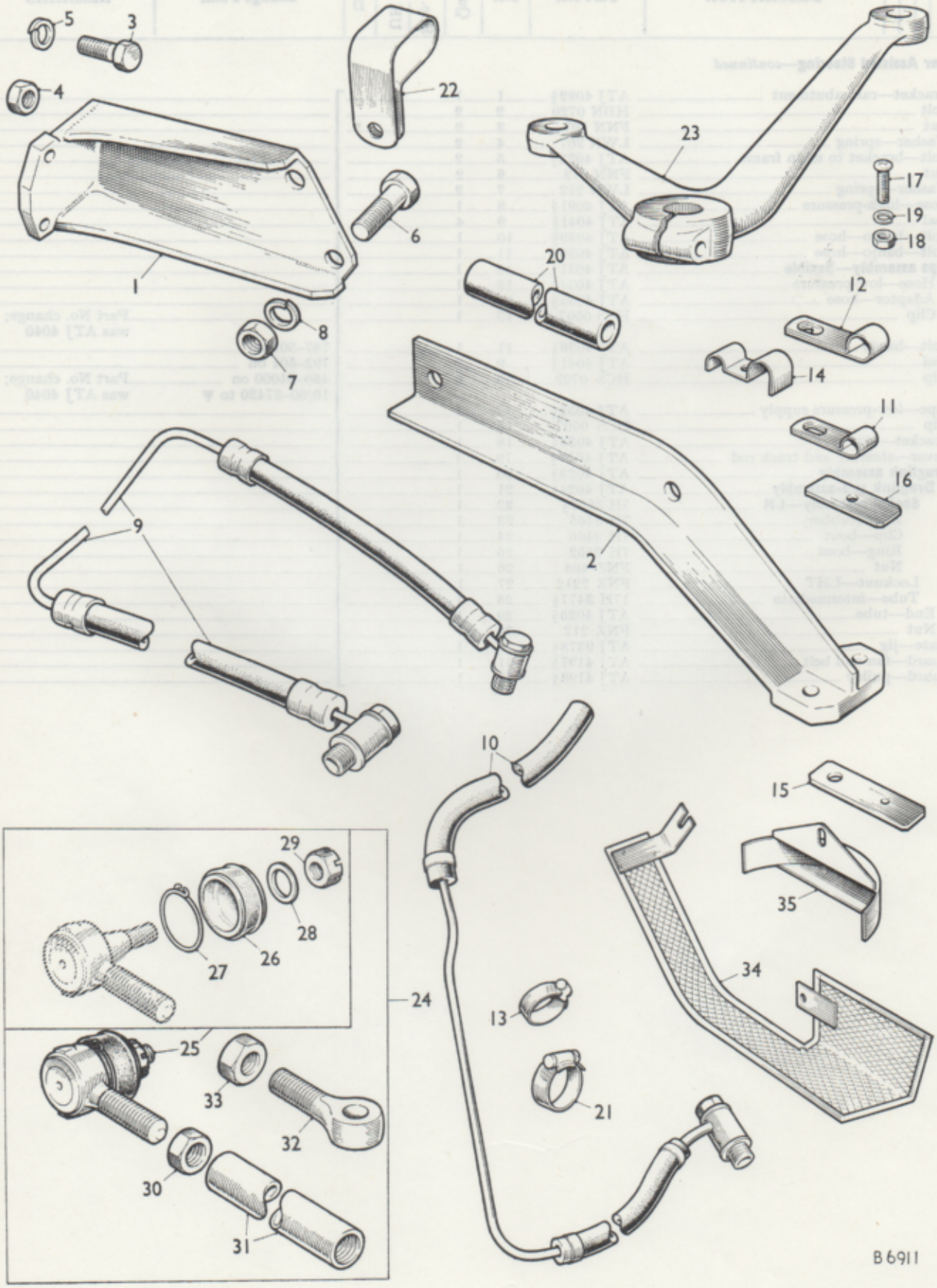

To face page MR 81·1

DESCRIPTION		Part No.	Illus. No.	Quantity	Stock recommds. DIST. Exp.	Stock recommds. DIST. UK	Stock recommds. D	Change Point	REMARKS
Power Assisted Steering—*continued*									
Bracket—ram abutment	**10/60**	ATJ 4092§	1	1					
Bracket—ram abutment	**10/42**	ATJ 4210§	2	1					
Bolt		HBN 0720	3	2					
Nut		FNN 107	4	2					
Washer—spring		LWN 207	5	2					
Bolt—bracket to main frame	**10/60**	ATJ 4033§	6	2					
Bolt—bracket to main frame	**10/42**	ATJ 4206§	6	2					
Nut		FNN 112	7	2					
Washer—spring		LWN 212	8	2					
Hose—pressure		ATJ 4219§	9	1					
Hose—return		ATJ 4264§	10	1					
Clip—hose									
Pressure		†ATJ 4211§	11	1					
Pressure		†PCR 0611	11	1					
Return		ATJ 4212§	12	1					
Return		HCS 0507	13	1					
Pressure and return		ATJ 4214§	14	2					
Plate—anchor		ATJ 4215§	15	1					
Plate—support		ATJ 4216§	16	1					
Screw—clip to plate		PMZ 0306	17	2					
Nut—screw		FNZ 103	18	2					
Washer—spring—nut		LWZ 203	19	2					
Pipe—low pressure supply		ATJ 4032§	20	1					
Clip		HCS 0709	21	2					
Bracket—clip		ATJ 4038§	22	1					
Lever—steering and track rod	**10/60**	ATJ 4017§	23	1					
Lever—steering and track rod	**10/42**	ATJ 4209§	23	1				10/42 92220 on	
Draglink assembly		ATJ 4023§	24	1				10/60 92220 on	
Draglink sub-assembly		ATJ 4024§		1					WSE use ATJ 4023
Socket assembly—LH		7H 3657§	25	1					
Boot (rubber)		7H 3465	26	1					
Clip—boot	**10/60**	†7H 3466	27	1					WSE use AAA 6027
Clip—boot		†AAA 6027	27	1					
Ring—boot		7H 3552	28	1					
Nut		FNZ 408	29	1					
Locknut—LHT		FNZ 2212	30	1					
Tube—intermediate		17H 3477§	31	1					
End—tube		ATJ 4025§	32	1					
Nut		FNZ 212	33	1					
Draglink assembly		ATJ 4207§	24	1					
Draglink sub-assembly		NSP		1					
Socket assembly—LH		7H 3657§	25	1					
Boot		7H 3465	26	1					
Clip	**10/42**	†7H 3466	27	1					WSE use AAA 6027
Clip—boot		†AAA 6027	27	1					
Ring		7H 3552	28	1					
Nut		FNZ 408	29	1					
Locknut—LHT		FNZ 2212	30	1					
Tube—intermediate		27H 6490§	31	1					
End—tube		ATJ 4025§	32	1					
Nut—lock		FNZ 212	33	1					
Plate—jig	**10/42, 10/60**	ATJ 9501§		1					
Guard—fan and belt		ATJ 4197§	34	1					
Guard—pulley		ATJ 4198 §	35	1					

§ Parts peculiar to Tractor only **See title-page for application** †Revised Information. Issue 2

ROAD SPEED CONTROL

	Page	Plate
CONTROL ROD	MR 85	R 70
GEARBOX LOCKING PLUNGER	MR 83	R 68
†GEARBOX SELECTORS	MR 82·1	R 67
HAND THROTTLE LEVER	MR 84	R 69

†Revised Information—Issue 2

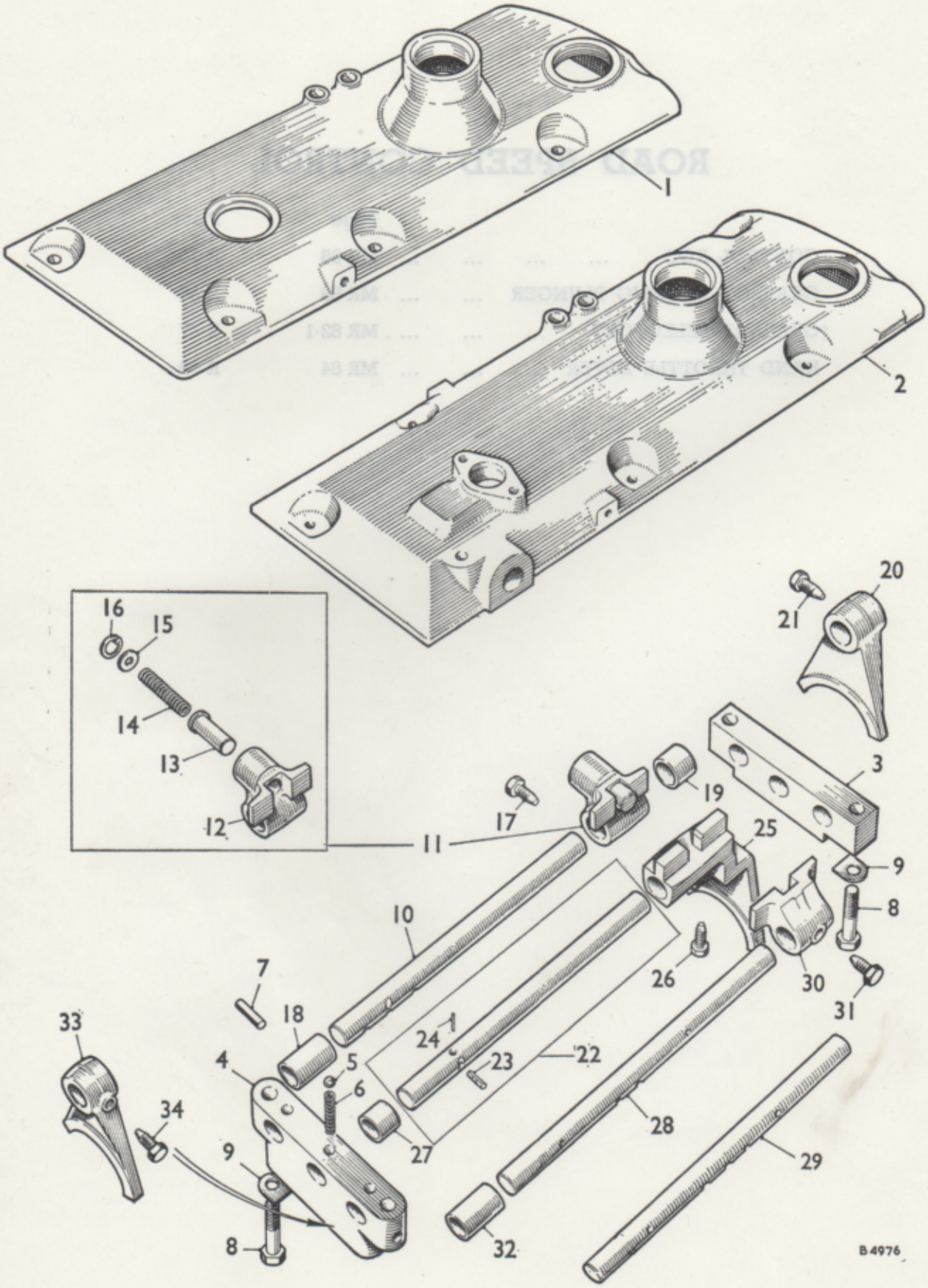

To face page MR 82·1

DESCRIPTION	Part No.	Illus. No.	Quantity	Stock recommds. DIST. Exp.	Stock recommds. DIST. UK	Stock recommds. D	Change Point	REMARKS
ROAD SPEED CONTROL								
Cover assembly—selectors and gearbox top	NT 8202§		1				4DM–787–501 to 11725 (less 9910 to 10000)	Not available; use component parts
Cover assembly—selectors and gearbox top	ATJ 7382§		1				4DM–787–11726 on (plus 9910 to 10000)	
							342–24000 on	
							460–24000 on	
Cover—gearbox top	NT 8191§	1	1				4DM–787–501 to 11725 (less 9910 to 10000)	
	ATJ 7381§	1	1				4DM–787–11726 on (plus 9910 to 10000)	
							342–24000 on	
							460–24000 on	
	ATJ 7656§	2	1				10/60–57420 on	
							10/42–57420 on	
Block—bearing—selector rod	NT 1140§	3	1					
Block—interlock—selector rod	NT 5201§	4	1					
Ball—selector—block	BLS 110	5	3					
Spring—ball	ATJ 1003§	6	3					
Plunger—interlock block	NT 5025§	7	2					
Bolt—block to top cover	ATJ 1009§	8	4					
Washer—tab—bolt	†NT 5202§	9	4					
Washer—tab—bolt	†ATJ 7773§	9	4					Not available; use ATJ 7773
Rod—selector—1st and reverse	NT 6096§	10	1					
Jaw and plunger assembly—1st and reverse	NT 6105§	11	1					
Jaw—selector	ATJ 7762§	12	1					Part No. change; was NT 6104
Plunger	NT 5994§	13	1					
Spring	ATJ 1004§	14	1					
Washer—abutment	NT 5995§	15	1					
Circlip	ISC 319	16	1					
Pin—jaw retaining	NT 5798	17	1					Not available; use ATJ 7775
Pin—jaw retaining	ATJ 7775§		1					
Tube—distance—intermediate	NT 6006§	18	1					
Tube—distance—short	NT 6005§	19	1					
Fork—1st and reverse selector	NT 5797§	20	1					
Pin—fork retaining	NT 5798§	21	1					Not available; use ATJ 7775
Pin—fork locating	ATJ 7775§		1					
Rod—selector—2nd and 3rd	NT 5175§	22	1					
Pin—interlock	NT 5024§	23	1					
Pin—locking	ATJ 1034§	24	1					
Fork—selector—2nd and 3rd	ATJ 7760§	25	1					Part No. change; was NT 6102
Pin—fork locating	NT 5798§	26	1					Not available; use ATJ 7775
Pin—fork locating	ATJ 7775§		1					
Tube—distance—short	NT 6005§	27	1					
Rod—selector—4th and 5th	NT 8192§	28	1				4DM–787–501 on	
							342–24000 on	
							460–24000 on	
Rod—selector—4th and 5th	ATJ 7653§	29	1				10/60–57420 on	
							10/42–57420 on	
Jaw—selector—4th and 5th	ATJ 7761§	30	1					Part No. change; was NT 6103
Pin—jaw retaining	NT 5798§	31	1					Not available; use ATJ 7775
Pin—jaw retaining	ATJ 7775§		1					
Tube—distance—long	NT 6004§	32	1					
Fork—selector—4th and 5th	NT 5797§	33	1					
Pin—fork locating	NT 5798§	34	1					Not available; use ATJ 7775
Pin—fork locating	ATJ 7775§		1					

§ Parts peculiar to Tractor only

See title-page for application

†Revised Information. Issue 4

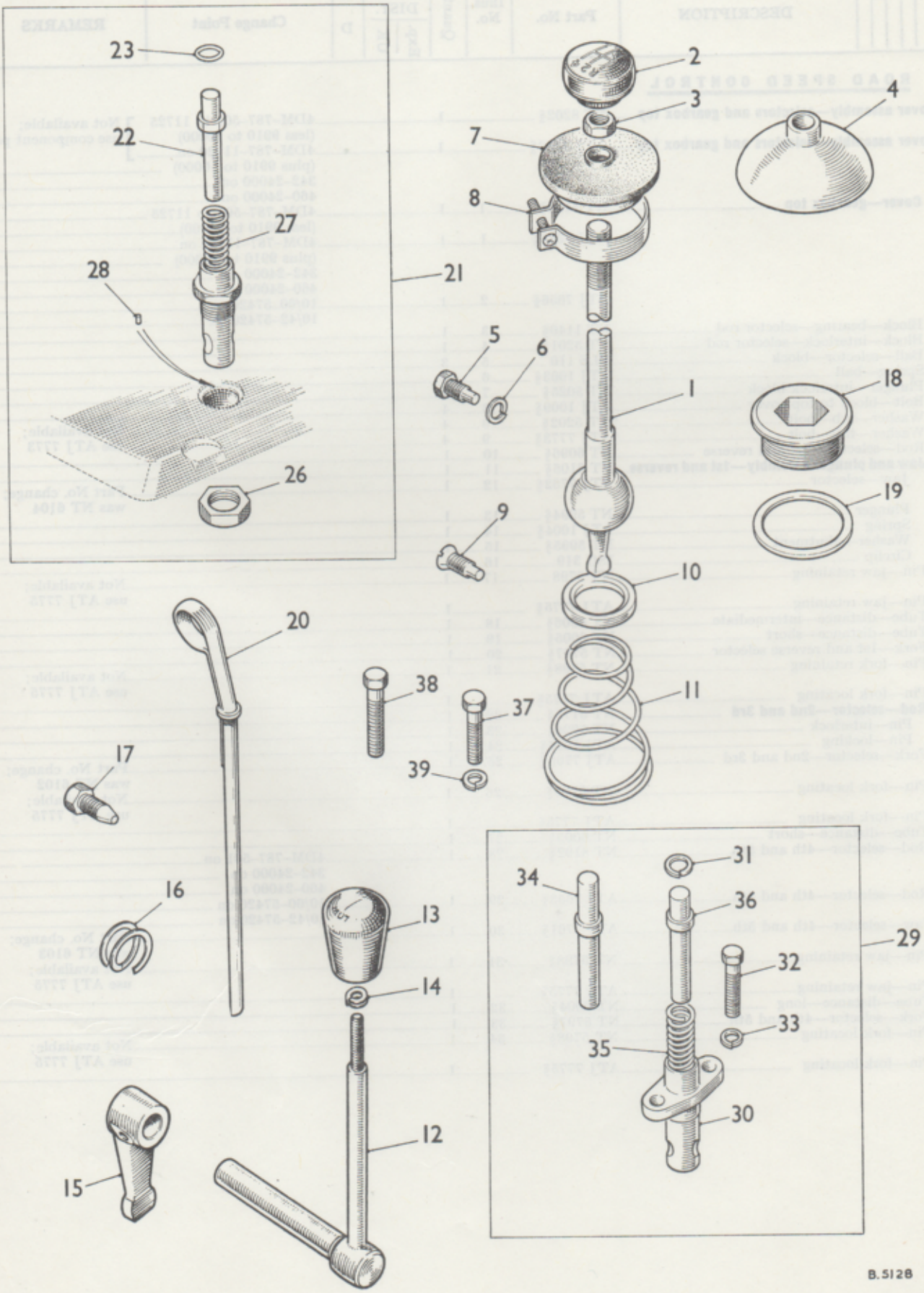
23
22
27
28
21
26
2
3
4
7
8
5
6
1
18
19
9
10
20
38
37
11
39
17
16
13
14
12
15
31
34
36
29
32
33
35
30
B.5128

DESCRIPTION	Part No.	Illus. No.	Quantity	Stock recommds. DIST. Exp.	UK	D	Change Point	REMARKS
Road Speed Control—*continued*								
Lever—change speed	NT 5796§	1	1					
Knob—lever	NT 5804§	2	1					
Nut—lever knob	FNZ 208	3	1					
Cover—lever	NT 1139§	4	1				4DM–787–501 to 11725	
Pin—lever locating	NT 5806§	5	1				(less 9910 to 10000)	
Washer—spring—pin	LWN 205	6	1					
Gaiter—lever	ATJ 7376§	7	1				4DM–787–11726 on	
Clip—gaiter	HCS 342	8	1				(plus 9910 to 10000)	
Pin—lever locating	ATJ 7157§	9	1				342–24000 on	
							460–24000 on	
							10/60–57420 on	
							10/42–57420 on	
Retainer—change speed lever	NT 1138§	10	1					
Spring—retainer	NT 1134§	11	1					
Lever—change—high/low range	ATJ 7529§	12	1					
Knob—lever	ATJ 7533§	13	1					
'O' ring—lever shaft	TRS 0912	14	1				10/60–57420 on	
Lever—operating—high/low range	ATJ 7532§	15	1				10/42–57420 on	
Washer—Thackeray	2K 2562	16	1					Part No. change; was ATJ 9331
Pin—operating shaft	ATJ 7384§	17	1					
Plug—gearbox filler	NT 5847§	18	1					
Washer—plain—plug	ATJ 1030§	19	1					
Dipstick	NT 5292§	20	1					
Plunger assembly—locking	NT 8198§	21	1					
Plunger	NT 8217§	22	1				4DM-787–501	
Ring—retaining	NT 8194§	23	1				342–24000 on	
Nut—plunger	NT 8195§	26	1				460–24000 on	
Spring—plunger	NT 8221§	27	1					
Dowel—plunger	ATJ 1028§	28	1					
Plunger assembly—locking	†ATJ 7633§	29	1					Not available; use component parts
Plunger assembly **20 KPH**	†ATJ 9532§		1					
Plunger assembly **25 KPH**	†ATJ 9533§		1					
Body—plunger	†ATJ 7637§	30	1					
Ring—spring	†ATJ 7636§	31	1				10/60–57420 on	
Plunger—locking **20 KPH**	†ATJ 7635§	34	1					
Plunger—locking **25 KPH**	†ATJ 7634§	36	1					
Spring—plunger	†ATJ 7638§	35	1					
Screw—body to top cover	†HNS 0507	32	2					
Washer—spring—screw	†LWN 205	33	2					
Plunger assembly—locking	†ATJ 7739§	29	1					Not available; use component parts
Plunger assembly—locking **20 KPH**	†ATJ 9534§		1					
Body—plunger	†ATJ 7637§	30	1					
Ring—spring	†ATJ 7636§	31	1				10/42–57420 on	
Plunger—locking **20 KPH**	†ATJ 7738§	34	1					
Spring—plunger	†ATJ 7638§	35	1					
Screw—body to top cover	†HNS 0507		2					
Washer—spring—screw	†LWN 205	33	2					
Bolt—top cover to gearbox casing	HBN 0610	37	7					
Bolt—top cover to gearbox casing	HBN 0616	38	1					
Washer—spring—bolt	LWN 206	39	8					

§ **Parts peculiar to Tractor only** **See title-page for application** † **Revised Information—Issue 3**

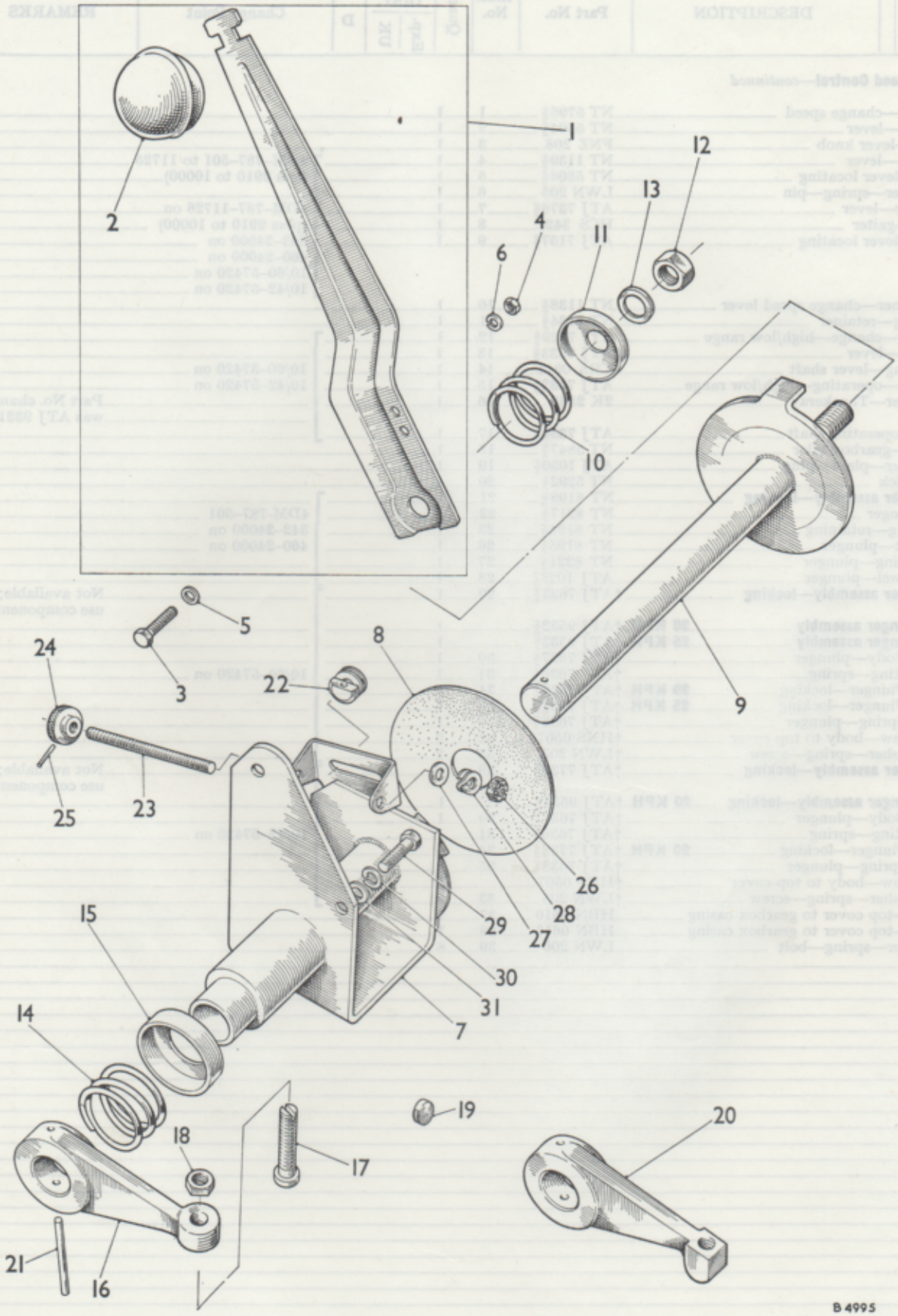

To face page MR 84

DESCRIPTION	Part No.	Illus. No.	Quantity	Stock recommds. DIST. Exp.	Stock recommds. DIST. UK	Stock recommds. D	Change Point	REMARKS
Road Speed Control—*continued*								
Lever assembly—hand throttle	†NT 4333§	1	1					
Knob—lever	†NT 1625§	2	1					
Screw—stop	†HNS 0505	3	1					
Nut—screw	†FNZ 105	4	1					
Washer—plain—screw	†PWZ 105	5	1					
Washer—spring—nut	†LWZ 205	6	1					
Control bracket **4DM**	NT 8185§	7	1				787–501 on	
460	ATJ 3078§	7	1				24000 on	
342	NT 8185§	7	1					
10/42, 10/60	†ATJ 3124§	7	1				57420 on	
Disc—friction	NT 8182§	8	1					
Friction plate and spindle **4DM**	NT 8181§	9	1				787–501 on	
460	ATJ 3080§		1					Not available; use ATJ 3087
460	ATJ 3087§	9	1				24000 on	
342	NT 8181§	9	1					
10/42, 10/60	†ATJ 3122§	9	1				57420 on	
Spring—compression—outer **4DM, 342**	†NT 3162§	10	1				4DM–787–501 on 342–24000 on	
460, 10/42, 10/60	†ATJ 3065§	10	1				460–24000 on 10/42–57420 on 10/60–57420 on	
Cup—compression spring—outer	NT 2455§	11	1					
Nut—spindle	FNZ 306	12	1					
Washer—plain—nut	PWZ 106	13	1					
Spring—compression—inner **4DM, 342**	†NT 3162§	14	1				4DM–787–501 on 342–24000 on	
460, 10/42, 10/60	†ATJ 3065§	14	1				460–24000 on 10/42–57420 on 10/60–57420 on	
Cup—compression spring—inner	NT 8186§	15	1					
Lever—abutment	NT 8189§	16	1				787–501 on	
Screw—adjusting **4DM, 460, 342**	NT 8223§	17	1				24000 on	
Nut—screw	NT 8187§	18	1					
Seal (lead)	NT 8129§	19	1					
Lever—abutment **10/42, 10/60**	†ATJ 3123§	20	1				57420 on	Correction was ATJ 2123
Pin—abutment lever	MPS 2610	21	1					
Stop—sliding	NT 5679§	22	1					
Screw—adjusting	NT 5681§	23	1					
Nut—knurled	NT 5680§	24	1					
Pin—nut	NT 3164§	25	1					
Nut—screw	FNZ 304	26	1					
Washer—plain—nut	PWZ 104	27	1					
Washer—spring—nut	AJD 7722 Z	28	1					
Screw—control bracket to fuel tank support	HNS 0506	29	2					
Washer—spring—screw	LWN 205	30	2					
Washer—plain—screw	PWN 105	31	2					

§ Parts peculiar to Tractor only

See title-page for application

†Revised Information—Issue 2

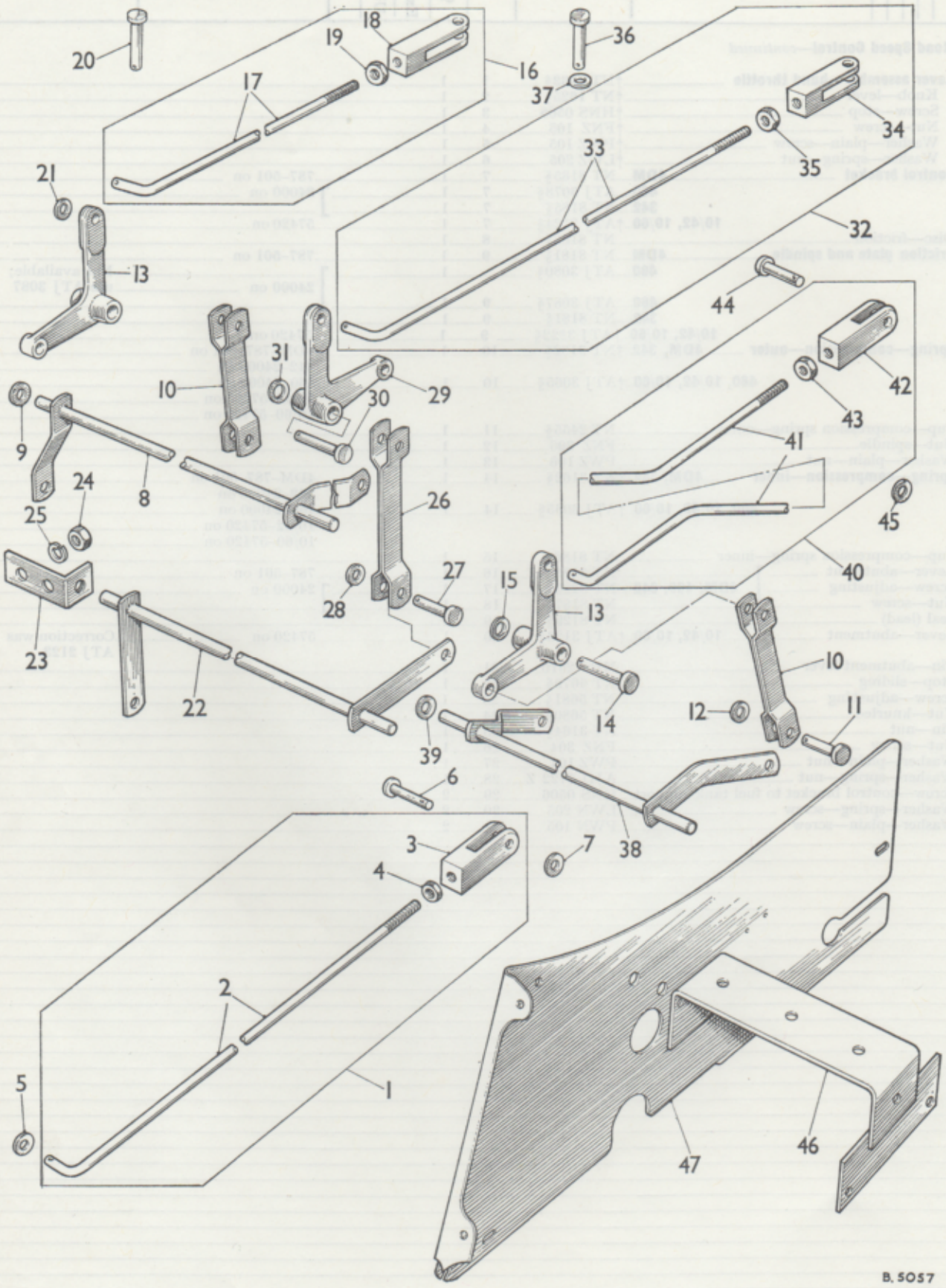

To face page MR 85

DESCRIPTION		Part No.	Illus. No.	Quantity	Stock recommds. DIST. Exp.	Stock recommds. DIST. UK	Stock recommds. D	Change Point	REMARKS
Road Speed Control—*continued*									
Rod assembly—control		NT 7090§	1	1					Not available; use component parts
Rod		NT 6602§	2	1					
Jaw		NT 6601§	3	1					
Nut—jaw		FNN 204	4	1					
Washer—plain—rod to hand lever		PWZ 104	5	1					
Pin—clevis—jaw		CLZ 0412	6	1					
Washer—plain—pin		PWZ 104	7	1					
Cross—shaft		ATJ 3005§	8	1					
Washer—plain—cross-shaft		PWZ 105	9	1					
Link—cross-shaft to bell-crank lever		NT 8154§	10	1					
Pin—link		CLZ 0410	11	2					
Washer—plain—pin		PWZ 105	12	2					
Lever—bell-crank		NT 8153§	13	1					
Pin—fulcrum—lever	**342**	CLZ 0525	14	1					
Washer—plain—pin		PWZ 105	15	1					
Rod assembly—control		NT 8146§	16	1					Not available; use component parts
Rod		NT 8147§	17	1					
Jaw		NT 6601§	18	1					
Nut—jaw		FNN 204	19	1					
Pin—jaw		CLZ 0412	20	1					
Washer—plain		PWZ 104	21	2					
Cross-shaft		NT 6697§	22	1					
Bracket—cross-shaft		NT 6976§	23	1					
Nut—bracket to battery tray		FNZ 104	24	2					
Washer—spring—nut		LWZ 204	25	2					
Link—cross-shaft to bell-crank lever		NT 6700§	26	1					
Pin—link		CLZ 0412	27	2					
Washer—plain—pin		PWZ 105	28	2					
Lever—bell-crank	**4DM**	NT 6746§	29	1					
Pin—fulcrum—lever		CLZ 0525	30	1					
Washer—plain—pin		PWZ 105	31	1					
Rod assembly—control		NT 7091§	32	1					Not available; use component parts
Rod		NT 6704§	33	1					
Jaw		NT 6601§	34	1					
Nut—jaw		FNN 204	35	1					
Pin—jaw		CLZ 0412	36	1					
Washer—plain		PWZ 104	37	2					
Cross-shaft		ATJ 3051§		1					Not available; use ATJ 3082
Cross-shaft		ATJ 3082§	38	1					
Washer—plain—cross-shaft		PWZ 105	39	1					
Rod assembly—control	**460**	ATJ 3054§		1					Not available; use component parts
Rod assembly—control	**10/60**	ATJ 3086§	40	1					
Rod		ATJ 3055§		1					Not available; use ATJ 3085
Rod		ATJ 3085§	41	1					
Jaw		NT 6601§	42	1					
Nut—jaw		FNN 204	43	1					
Pin—jaw		CLZ 0412	44	1					
Washer—plain		PWZ 104	45	2					
Cross-shaft		†ATJ 3082§	38	1					
Washer—plain—cross-shaft		†PWZ 105	39	1					
Rod—control	**10/42**	†ATJ 3112§	41	1					
Jaw		†NT 6601§	42	1					
Nut—jaw		†FNN 204	43	1					
Pin—jaw		†CLZ 0412	44	1					
Washer—plain		†PWZ 104	45	2					
SUNDRIES									
Strip—fuel tank support		NT 8208§	46	1					
Panel—side—LH	**4DM, 460, 342**	NT 8209§	47	1					
Panel—side—LH	**10/42, 10/60**	†ATJ 3134§	47	1					

§ **Parts peculiar to Tractor only** **See title-page for application** † **Revised Information—Issue 2**

| | | |

DESCRIPTION	Part No.	Illus. No.	Quantity	Stock recommds. DIST. Exp.	Stock recommds. DIST. UK	Stock recommds. D	Change Point	REMARKS
INDEPENDENT POWER TAKE-OFF								
CLUTCH OPERATING LINKAGE								
Carrier—clutch withdrawal	NT 6784§	1	1					
Circlip	ATJ 1040§	2	1					
Spring—return	NT 6812§	3	1					
Bracket assembly—carrier	NT 7394§	4	1					
Screw—bracket	HNS 0509	5	4					
Washer—spring—screw	LWN 205	6	4					
Screw—carrier to bracket	HNS 0506	7	5					
Washer—spring—screw	LWN 205	8	5					
Screw—bracket to transfer gear housing	ATJ 1012§	9	4					
Washer—spring—screw	LWN 205	10	4					
Sleeve—withdrawal—P.T.O. clutch	NT 7387§	11	1					
Pin—anti rotation	NT 7384§	12	1					
Bearing—thrust—P.T.O. clutch	NT 6780§	13	1	★	★			
Sleeve—thrust—main clutch	NT 7297§	14	1					
Bearing—thrust—main clutch	NT 6779§	15	1	★	★			
Carrier—thrust sleeve	NT 7298§	16	1					
Excluder—dust	NT 6777§	17	1					
Retainer—dust excluder	NT 6778§	18	1					
Fork—main clutch operating	ATJ 7390§	19	1					
Bush—fork	LBS 0908	20	2					
Screw—fork to thrust sleeve carrier	HNS 0506	21	2					
Washers—thrust sleeve carrier								
Spring	LWN 205	22	2					
Plain	PWN 205	23	2					
Thrust	NT 7299§	24	2					
Belleville	NT 3770§	25	2					
Plain	ATJ 1035§	26	2					
Shaft—operating—main clutch	NT 7305§	27	1					
Peg—shaft locating	NT 7408§	28	1					
Screw—fork locating	NT 5798§	29	1					
Screw—fork locating	†NT 5798§	29	1					Not available; use ATJ 7775
Screw—fork locating	†ATJ 7775§	29	1					
Rod assembly—clutch operating	NT 7395§	30	1					
Rod	NT 6820§	31	1					
Fork—bottom	NT 7283§	32	1					
Fork—top	NT 5545§	33	1					
Nut—fork	FNN 106	34	1					
Washer—spring—nut	LWN 206	35	2					
Pin—jaw	NT 3033§	36	2					
Washer—plain—pin	PWN 105	37	2					
Shaft—clutch pedal	NT 6824§	38	1					
Pedal—clutch **3DL, 4DM, 342, 460**	†NT 1992§	39	1					Correction; was NT 1192. Not available; use ATJ 5019
Pedal—clutch **10/42, 10/60**	ATJ 5019§	39	1					
Key—pedal clamping	NT 5955§	40	1					
Bolt—pedal clamping	HBN 0618	41	1					
Nut—bolt	FNN 106	42	1					
Washer—spring—nut	LWN 206	43	1					
Spring—pedal return	NT 3134§	44	1	★	★			
Plate—anchor—spring	NT 2218§	45	1					
Screw—clutch stop	HNS 0614	46	1					
Nut—screw	FNN 206	47	1					
Bracket—clutch pedal shop	ATJ 5043§	48	1					

§ Parts peculiar to Tractor only

See title-page for application

†Revised Information. Issue 2

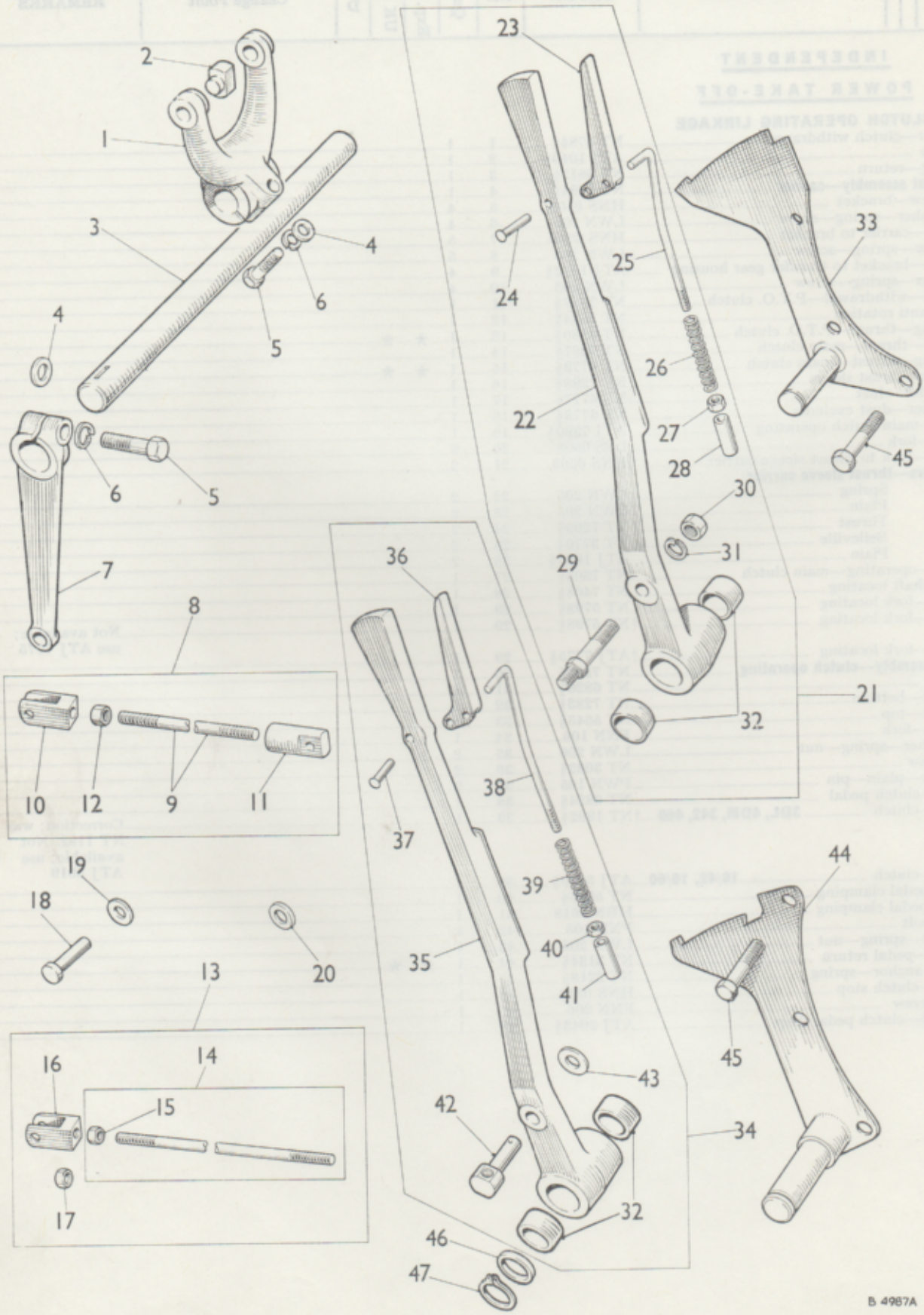
1
2
3
4
4
5
6
6
5
7
8
10
12
9
11
18
19
20
13
14
16
15
17
23
24
25
26
22
27
28
30
31
29
21
32
33
45
36
38
37
39
40
41
35
44
45
43
42
34
32
46
47
B 4987A

DESCRIPTION	Part No.	Illus. No.	Quantity	Stock recommds. DIST. Exp.	Stock recommds. DIST. UK	Stock recommds. D	Change Point	REMARKS
TRANSMISSION SHAFT								
Shaft—transmission—main drive	NT 8062§	1	1					
Circlip—shaft	CCN 118	2	1					
Sleeve—driving	ATJ 7239§	3	1					WSE use ATJ 7363
Plug—driving sleeve retaining	NT 8064§	4	1				4DM–IDE10388 on	
Washer—plug (fibre)	ATJ 1027§	5	1				792–501 to 10108	
Pin—clevis—sleeve retaining	†CLZ 0427	6	1				(less 3210 to 10000)	For this application; use CLZ 0426
Shaft—transmission—P.T.O. clutch	NT 7485§	7	1				3DL–772–501 to 1552	WSE use ATJ 9554
Flange—driving	NT 6787§	8	1					
Dog—driving	NT 6782§	9	1					
Bolt—dog to flange	HBN 0514	10	4					
Washer—spring—bolt	LWN 205	11	4					
Shaft—transmission—main drive	ATJ 7271§	12	1					
Sleeve—driving	ATJ 7363§	13	1					
Plug—driving sleeve retaining	ATJ 7240§	14	2				4DM–792–10109 on	
Washer—plug (fibre)	ATJ 1027§	15	2				(plus 3210 to 10000)	
Pin—clevis—sleeve retaining	CLZ 0427	16	2				3DL–772–1553 on	For this application use CLZ 0426
Shaft—transmission—P.T.O. clutch	ATJ 7243	17	1				342–24000 on	
Circlip—shaft	CCN 122	18	1				460–24000 on	
Flange—driving	†NT 6787§	19	1				4DM–792–10109 on	WSE use ATJ 9554
Dog—driving	†NT 6782§	20	1				(plus 3210 to 10000)	
Bolt—dog to flange	HBN 0514	21	4				3DL–772–1553 on	
Washer—lock—bolt	ATJ 7237§	22	2				342–24000 on	
							460–24000 on	
							10/42–57436 to 93476	
							10/60–57436 to 93476	
Flange and dog assembly	†ATJ 9554§		1					
Flange—driving	†ATJ 7820§		1					WSE use ATJ 9554
Flange—driven	†ATJ 7822§		1					
Dog—driving	†ATJ 7821§		1				10/42–93477 on	
Bolt—dog to flange	HBN 0614	21	1				10/60–93477 on	
Washer—lock—bolt	ATJ 7823§	22	2					

§ Parts peculiar to Tractor only

See title-page for application

†Revised Information. Issue 3

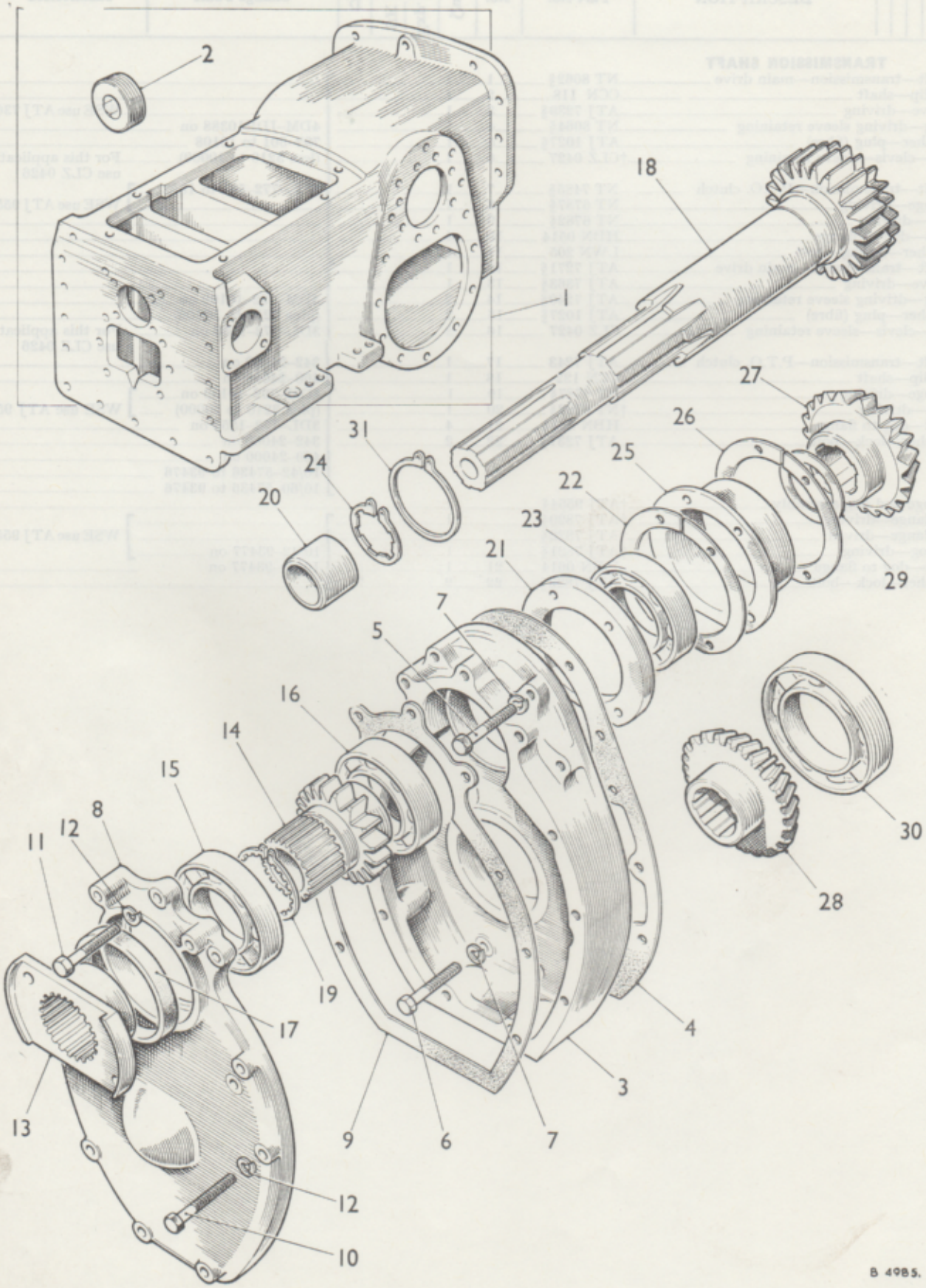
2
18
1
27
26
31
25
24
22
20
23
21
29
7
5
16
14
15
8
12
11
30
28
19
17
4
3
13
9
6
7
12
10
B 4985.

DESCRIPTION	Part No.	Illus. No.	Quantity	Stock recommds. DIST. Exp.	Stock recommds. DIST. UK	Stock recommds. D	Change Point	REMARKS
FIVE SPEED GEARBOX								
Gearbox and differential assembly	NT 8200§		1					WSE use use component parts
Gearbox and differential assembly (less top cover and selectors)	NT 8201§		1					
Casing—gearbox	NT 7424§	1	1					
Plug—core	NT 4952§		3					WSE use ATJ 7102
Plug—core	ATJ 7102§	2	3					
Housing—transfer gear	NT 6635§	3	1					
Joint—housing	NT 6687§	4	1					
Bolt—housing to gearbox	HBN 0615	5	4					
Bolt—housing to gearbox	HBN 0610	6	6					
Washer—spring—bolt	LWN 206	7	10					
Cover—housing	NT 6636§	8	1					
Joint—cover	NT 6688§	9	1					
Bolt—cover to housing	HBN 0513	10	8					
Bolt—cover to housing	HBN 0509	11	3					
Washer—spring—bolt	LWN 205	12	11					
Flange—driven	†NT 6788§	13	1					WSE use ATJ 9554 for details see page MS 4
Gear—P.T.O. driving	NT 6789§	14	1					
Bearing—gear—large	ATJ 1021§	15	1					
Bearing—gear—small	ATJ 1018§	16	1					
Seal—oil	ATJ 1023§	17	1					
Shaft—primary—main drive	NT 6750§	18	1					
Circlip—shaft	CCN 132	19	1					
Sleeve	NT 6741§	20	1					
Retainer—front bearing	NT 6664§	21	1					
Shims—retainer								
·003″ (·076 mm.)	NT 6665§	22	A/R					selective fit
·010″ (·254 mm.)	NT 6666§	22	A/R					
·020″ (·508 mm.)	NT 7497§	22	A/R					
Bearing—front	6K 538	23	1					Part No. change; was ATJ 1019
Circlip—bearing	ESC 035	24	1					
Housing—bearing	NT 6663§	25	1					
Shim—·003″ (·076 mm.)	NT 6665§	26	A/R					
Pinion—bevel	NT 6136§	27	1				4DM–IDE10388 on 792–501 on 3DL–772–501 on 342–24000 to 40954 (less 39182 to 39201 and 39214 to 39239) 460–24000 to 40954 (less 39182 to 39201 and 39214 to 39239)	
Pinion—bevel	ATJ 7481§	28	1				342–40955 on (plus 39182 to 39201 and 39214 to 39239) 460–40955 on (plus 39182 to 39201 and 39214 to 39239)	
Shims—bevel pinion								
·003″ (·076 mm.)	†NT 7443	29	A/R					Correction; was NT 7433
·007″ (·178 mm.)	NT 7444§	29	A/R					
·025″ (·635 mm.)	NT 7499§	29	A/R					
Bearing—rear	NT 3053§	30	1					
Circlip—bearing	ESC 040	31	1					

§ Parts peculiar to Tractor only

See title-page for application

†Revised Information. Issue 2

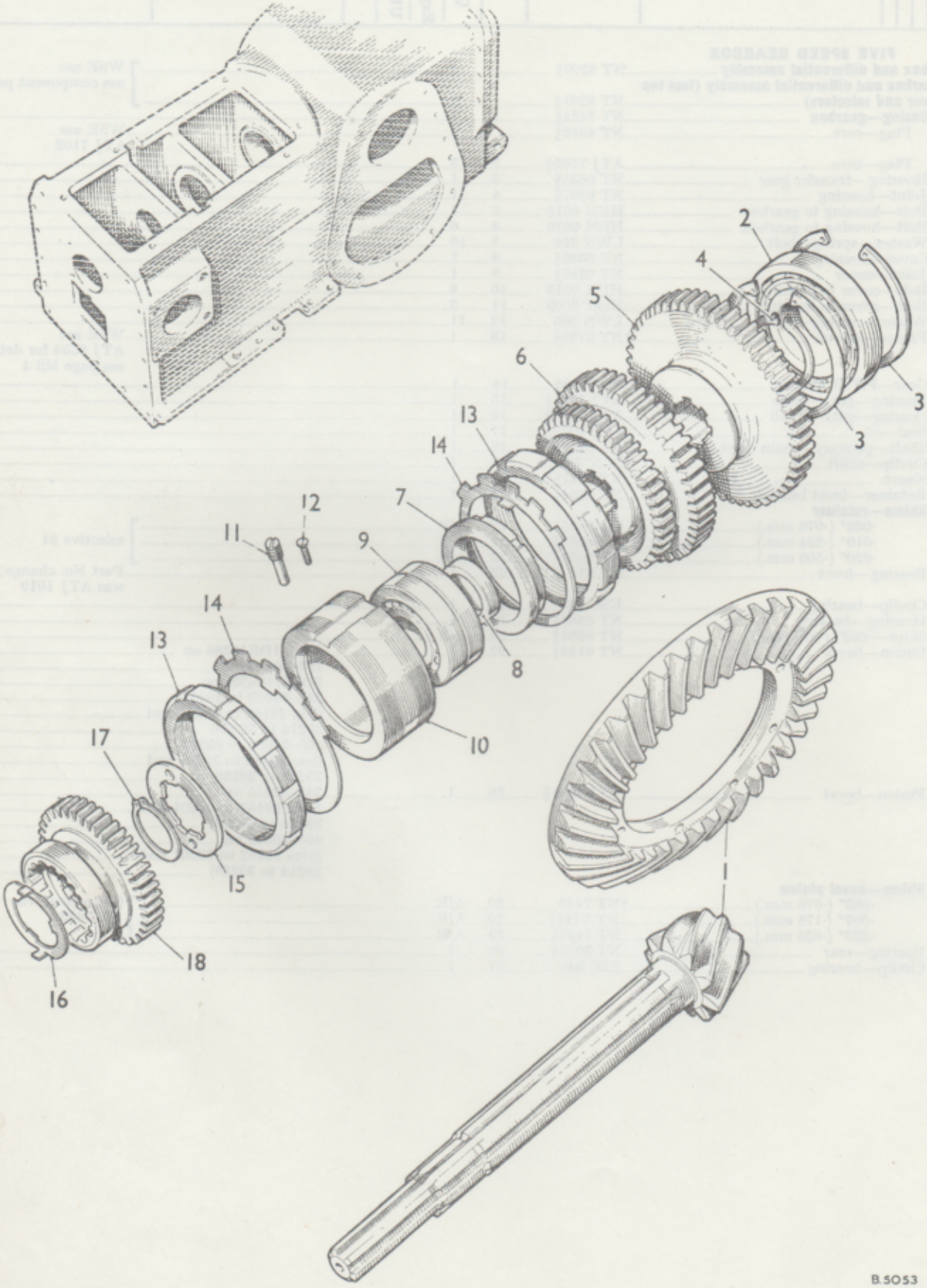
2
4
5
6
3
3
13
14
7
12
11
9
14
13
8
10
17
15
18
16
1
B.5053

DESCRIPTION	Part No.	Illus. No.	Quantity	Stock recommds. DIST. Exp.	Stock recommds. DIST. UK	Stock recommds. D	Change Point	REMARKS
Five-Speed Gearbox—*continued*								
Mainshaft and crown wheel	NT 5814§		1				4DM–IDE10388 on 792–501 on 3DL–772–501 on 460–24000 to 24470 342–24000 to 24470	Not available; use ATJ 7422 with 1 off ATJ 7416 and as required ATJ 7417 to ATJ 7421
Mainshaft and crown wheel	ATJ 7422§	1	1				460–24471 on 342–24471 on	
Bearing—ear	NT 3059§	2	1					
Circlips—bearing								
Internal	NT 4013§		2					Not available; use ATJ 1058
Internal	ATJ 1058§	3	2					
External	NT 4011§		1					Not available; use CCN 128
External	CCN 128	4	1					
Gear—1st speed	†NT 1113§	5	1					Not available; use ATJ 7780
Gear—1st speed	†ATJ 7780§	5	1					
Gear—2nd and 3rd speed	NT 1114§	6	1					
Nut—bearing	NT 4958§	7	1					
Collar—bearing thrust	NT 1119§	8	1					
Bearing—centre	†AMK 7016	9	1					Part No. duplication was NT 3057. For this application; use ATJ 1089
Bearing—centre	†ATJ 1089§	9	1					
Housing—bearing	NT 4957§	10	1					
Pin—anti-rotation	NT 4960§	11	1					
Screw—locking	CMN 0308	12	1					
Nut—lock—housing	NT 4959§	13	2					
Washer—lock—nut	NT 1747§	14	2					
Washers—mainshaft								
·169″ (4·293 mm.)	NT 5424§	15	A/R				4DM–IDE10388 on	
·172″ (4·369 mm.)	NT 5423§	15	A/R				792–501 on	
·175″ (4·445 mm.)	NT 5422§	15	A/R				3DL–772–501 on	
·178″ (4·521 mm.)	NT 5421§	15	A/R				460–24000 to 24470	
·181″ (4·597 mm.)	NT 5420§	15	A/R				342–24000 to 24470	
·169″ (4·293 mm.)	ATJ 7421§	15	A/R					
·172″ (4·369 mm.)	ATJ 7420§	15	A/R					
·175″ (4·445 mm.)	ATJ 7419§	15	A/R				460–24471 on	
·178″ (4·521 mm.)	ATJ 7418§	15	A/R				342–24471 on	
·181″ (4·597 mm.)	ATJ 7417§	15	A/R					
Locking	ATJ 7416§	16	1					
Circlip—bearing	ESC 040	17	1					
Gear—4th and 5th speed	NT 4643§	18	1					

§ Parts peculiar to Tractor only

See title-page for application

†Revised Information. Issue 2

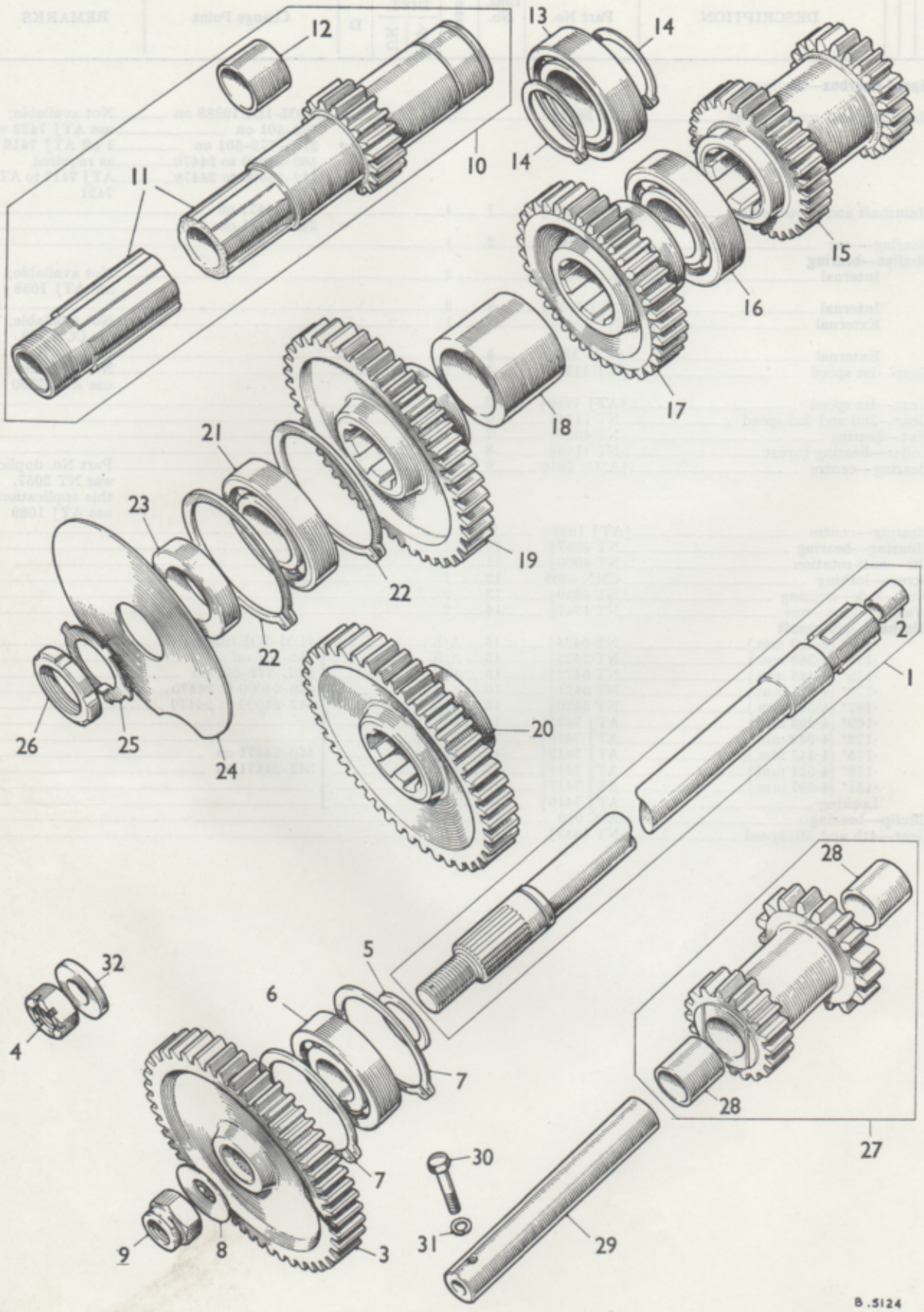
12
13
14
14
10
11
15
16
17
18
21
23
19
22
22
2
1
20
26
25
24
28
32
5
6
4
7
28
27
7
30
9
8
3
31
29
B .5124

DESCRIPTION	Part No.	Illus. No.	Quantity	Stock recommds. DIST. Exp.	Stock recommds. DIST. UK	Stock recommds. D	Change Point	REMARKS
Five-Speed Gearbox—*continued*								
Shaft—primary—P.T.O.	NT 6880§		1					WSE use ATJ 7478 with 1 off ATJ 7479, 1 off FNN 412 1 off ATJ 1043, 1 off CCN 120 & 1 off ATJ 7480
							4DM–IDE10388 on	
							792–501 to 10987	
Gear—driven—P.T.O.	NT 6781§		1				(less 4200 to 10000)	WSE use ATJ 9381
Washer—Belleville—shafr	ATJ 9351§	8	1				3DL–772–501 to 2086	
Locknut—shaft	LNN 212	9	1					
Bearing—shaft	ATJ 1017§	6	1					
Circlip—bearing	ATJ 1041§	7	2					
Washer—bearing	NT 6878§	5	1					
P.T.O. primary shaft and driven gear assembly	ATJ 9381§		1					WSE use ATJ 7478 with 1 off ATJ 7479 1 off FNN 412, 1 off CCN 120 & 1 off ATJ 7480
Sub-assembly—P.T.O. primary shaft	ATJ 7104§		1					
Shaft—primary	ATJ 7273§		1				4DM–792–10988 on	
Bush—spigot	ATJ 6053§	2	1				(plus 4200 to 10000)	
Gear—driven—P.T.O.	ATJ 7274§		1				3DL–772–2087 on	
Locknut—shaft	FNN 412	4	1				460–24000 to 51209	
Washer—plain—shaft	ATJ 1043§	5	1				342–24000 to 51209	
Bearing—shaft	ATJ 1017§	6	1					
Circlip—bearing	ATJ 1041§	7	2					
Washer—bearing	NT 6878§	5	1					
Sub-assembly—P.T.O. primary shaft	ATJ 7478§	1	1					
Bush—spigot	ATJ 6053§	2	1					
Gear—driven—P.T.O.	ATJ 7479§	3	1				460–51510 on	
Nut—shaft	FNN 412	4	1				342–51210 on	
Washer—plain—shaft	ATJ 1043§	32	1					
Bearing—shaft	ATJ 7480§	6	1					
Circlip—bearing	CCN 120	7	1					
Layshaft assembly	NT 7368§		1				4DM–IDE10388 to 14781	WSE use NT 8222
Layshaft	NT 6737§		1					
Layshaft assembly	NT 8222§	10	1				4DM–IDE14782 on	
Layshaft	NT 8211§	11	1				792–501 on	
							3DL–772–501 on	
							460–24000 on	
							342–24000 on	
Bush	ATJ 1032§	12	1					
Bearing—rear	ATJ 1020§	13	1					
Circlip—bearing	ESC 050	14	2					
Gear—2nd and 3rd speed	NT 6771§	15	1					
Bearing—centre	ATJ 1020§	16	1					
Gear—4th speed	NT 6772§	17	1					
Piece—distance	NT 6774§	18	1					
Gear—constant mesh	NT 6773§	19	1				4DM–IDE10388 on	
							792–501 to 10703	
							(less 3872 to 10000)	
							3DL–772–501 to 1879	
Gear—constant mesh	ATJ 7285§	20	1				4DM–792–10704 on	
							(plus 3872 to 10000)	
							3DL–772–1880 on	
							460–24000 on	
							342–24000 on	
Bearing—front	ATJ 1020§	21	1					
Circlip—bearing	ISC 390	22	2					
Piece—packing	NT 6775§	23	1					
Flinger—oil	NT 6723§	24	1					
Washer—lock	†NT 6725§	25	1					WSE use ATJ 7855 with ATJ 7854
Washer—lock	†ATJ 7855†		1					
Nut—lock—layshaft	†NT 6724§	26	1					WSE use ATJ 7854 with ATJ 7855
Nut—lock—layshaft	†ATJ 7854§		1					
Reverse gear assembly	NT 1108§	27	1					
Bush	NT 3007§	28	2					
Shaft—reverse gear	NT 4955§	29	1					
Bolt—shaft	HBN 0620	30	1					
Washer—spring—bolt	LWN 206	31	1					

§ Parts peculiar to Tractor only

See title-page for application

†Revised Information. Issue 2

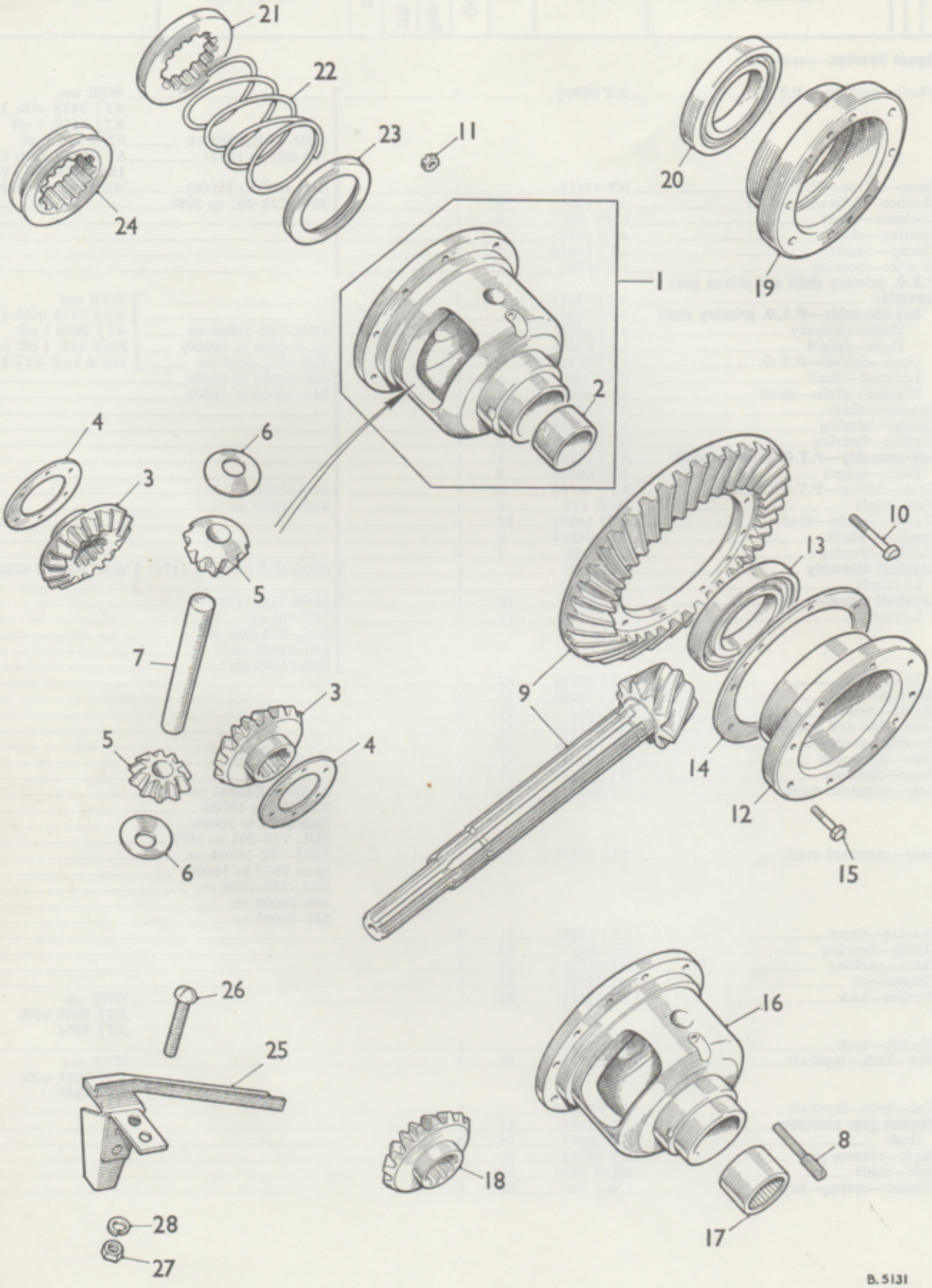
21
22
23
11
24
20
19
1
2
4
6
3
5
7
3
5
4
6
10
13
9
14
12
15
26
25
16
8
18
17
28
27
B. 5131

DESCRIPTION	Part No.	Illus. No.	Quantity	Stock recommds. DIST. Exp.	Stock recommds. DIST. UK	Stock recommds. D	Change Point	REMARKS
Five-Speed Gearbox—*continued*								
Differential assembly	NT 5920§		1					WSE use component parts
Differential sub-assembly	NT 5914§		1					WSE use component parts
Housing	NT 5915§	1	1					WSE use ATJ 7183
Housing	ATJ 7183§	1	1				4DM–IDE10388 on	
Bush	NT 4694§	2	2				792–501 on	
Gear	NT 1154§	3	2				3DL–772–501 on	
Washer—thrust—gear	NT 3077§	4	2				460–24000 to 38249	
Pinion	NT 5144§	5	2				(less 38173 to 38192)	WSE use ATJ 7803 with 1 off ATJ 7776
							342–24000 to 38249	
							(less 38173 to 38192)	
Washer—thrust—pinion	NT 5145§	6	2					
Shaft—pinion	†NT 5155§		1					WSE use ATJ 7776 with ATJ 7803 for details refer to page MS 13
Shaft—pinion	ATJ 7495§	7	1					
Pin—pinion shaft	NT 5917§	8	1					
Mainshaft and crown wheel	NT 5814		1				4DM–IDE10388 on	WSE use ATJ 7422
							792–501 on	
							3DL–772–501 on	
							460–24000 to 24470	
							342–24000 to 24470	
Mainshaft and crown wheel	ATJ 7422§	9	1				460–24471 fo 38249	
							(less 38173 to 38192)	
							342–24471 to 38249	
							(less 38173 to 38192)	
Bolt—crown wheel	NT 5812§	10	8					
Nut—bolt	FNN 307	11	8				4DM–IDE10388 on	
Housing—bearing	NT 5922§	12	2				792–501 on	
Bearing	NT 4696§	13	2				3DL–772–501 on	
Shims—bearing housing							460–24000 to 38249	
·003″ (·076 mm.)	NT 1187§	14	A/R				(less 38173 to 38192)	
·010″ (·254 mm.)	NT 1188§	14	A/R				342–24000 to 38249	
·025″ (·635 mm.)	NT 1189§	14	A/R				(less 38173 to 38192)	
Bolt—bearing housing to gearbox	ATJ 1007§	15	16					
Housing—differential	ATJ 7446§	16	1					WSE use ATJ 7801 with 3 off ATJ 1076
Housing—differential	ATJ 7801§	16	1					
Ring—spring	ATJ 1076§		3					
Bearing—needle roller	ATJ 2011§	17	2					
Gear	ATJ 7437§	18	2					
Washer—thrust—gear	NT 3077§	4	2					
Pinion	†NT 5144§	5	2					WSE use ATJ 7803 with 1 off ATJ 7776
Washer—thrust—pinion	NT 5145§	6	2					
Shaft—pinion	†ATJ 7495§	7	1					WSE use ATJ 7776 with ATJ 7803 for details refer to page MS 13
Pin—pinion shaft	NT 5917§	8	1				460–38250 on	
Mainshaft and crown wheel	ATJ 7422§	9	1				(plus 38173 to 38192)	
Bolt—crown wheel	NT 5812§	10	8				342–38250 on	
Nut—bolt	FNN 307	11	8				(plus 38173 to 38192)	
Housing—bearing	ATJ 7667§	19	2					Part No. change; was ATJ 7186
Bearing	ATJ 7067§	20	2					
Shims—bearing housing								
·003″ (·076 mm.)	NT 1187§	14	A/R					
·010″ (·254 mm.)	NT 1188§	14	A/R					
·025″ (·635 mm.)	NT 1189§	14	A/R					
Bolt—bearing housing to gearbox	ATJ 1007§	15	16					
Ring—locking—differential lock	ATJ 7377§	21	1				460–38250 to 55560	
Spring—release	ATJ 7378§	22	1				(plus 38173 to 38192)	
Cup—spring locating	ATJ 7277§	23	1				342–38250 to 55560	
							(plus 38173 to 38192)	
Ring—locking—differential lock	ATJ 7542§	24	1				460–55561 on	
							342–55561 on	
Catcher—oil	NT 5453§	25	1					WSE use ATJ 3219 with 1 off ATJ 3223, 2 off PMN 0407 and 2 off LWN 204
Screw—oil catcher	NT 5846§	26	2					
Nut—screw	FNN 105	27	2					
Washer—spring—nut	LWN 205	28	2					

§ Parts peculiar to Tractor only

See title-page for application

†Revised Information. Issue 4

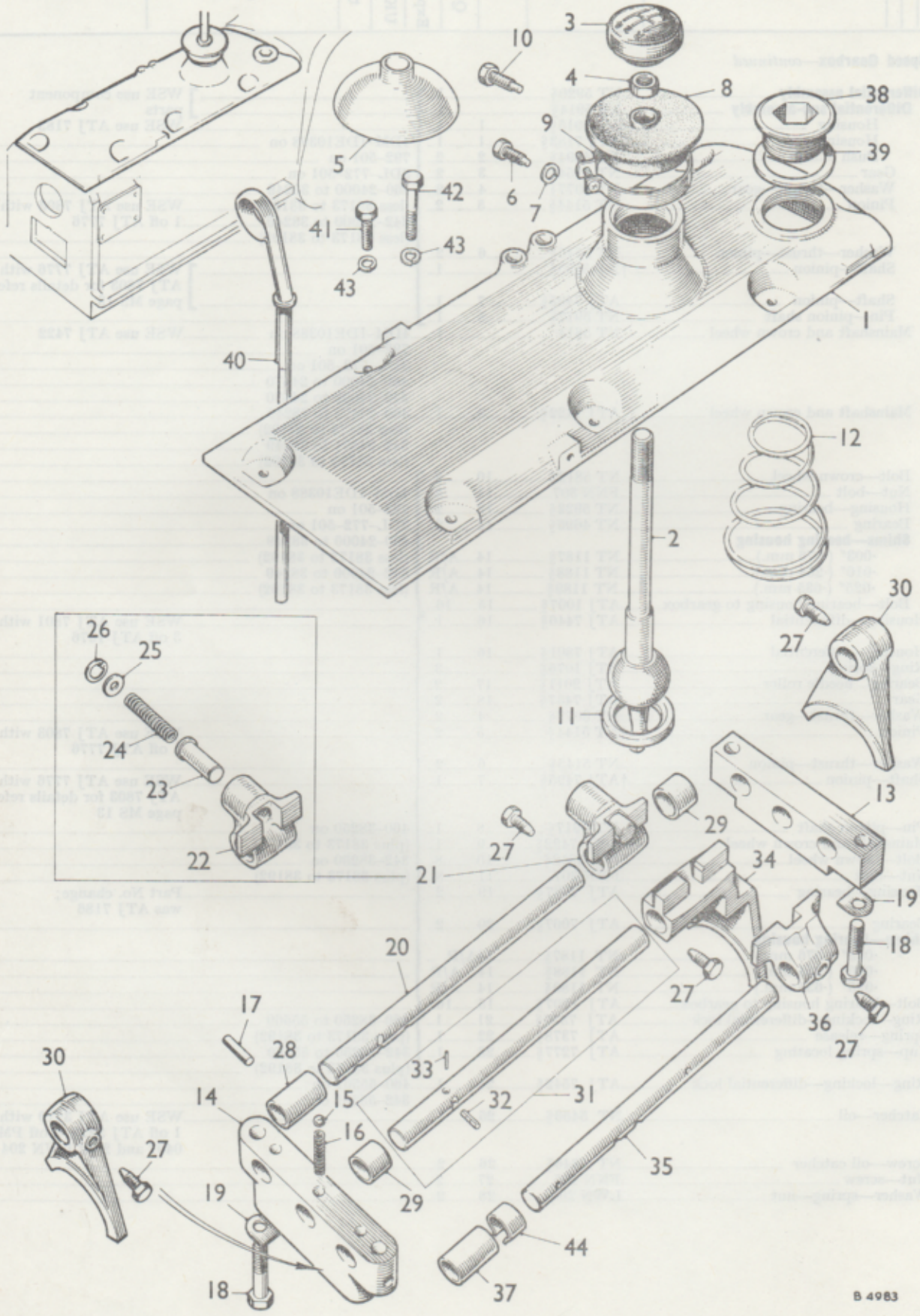
3
10
4
8
38
9
39
5
6
7
42
41
43
43
1
40
12
2
30
27
26
25
24
23
22
11
13
29
27
21
34
19
18
20
27
36
27
17
28
33
30
14
15
32
31
16
27
35
19
29
44
18
37
B 4983

DESCRIPTION	Part No.	Illus. No.	Quantity	Stock recommds. DIST. Exp. UK	Stock recommds. DIST. D	Change Point	REMARKS
Five-Speed Gearbox—*continued*							
Cover assembly—gearbox top and selectors	NT 5792§		1			4DM–IDE10388 on 792–501 to 10895 (less 4110 to 10000) 3DL–772–501 to 2031	Not available; use component parts Not available; use ATJ 7156
Cover—gearbox top	NT 6038§		1				
Cover assembly—gearbox top and selectors	ATJ 7379§		1			4DM–792–10896 on (plus 4110 to 10000) 3DL–772–2032 on 460–24000 on 342–24000 on	Not available; use component parts
Cover—gearbox top	ATJ 7156§	1	1				
Lever—change speed	NT 5796§	2	1				
Knob—lever	NT 5804§	3	1				
Nut—knob	FNZ 208	4	1				
Cover—lever	NT 1139§	5	1			4DM–IDE10388 on 792–501 to 10895 (less 4110 to 10000) 3DL–772–501 to 2031	
Pin—lever locating	NT 5806§	6	1				
Washer—spring—pin	LWN 205	7	1				
Gaiter—lever	ATJ 7376§	8	1			4DM–792–10896 on (plus 4110 to 10000) 3DL–772–2032 on 460–24000 on 342–24000 on	
Clip—gaiter	HCS 340	9	1				
Pin—lever locating	ATJ 7157§	10	1				
Retainer—change speed lever	NT 1138§	11	1				
Spring	NT 1134§	12	1				
Block—bearing—selector rod	NT 1140§	13	1				
Block—interlock—selector rod	NT 5201§	14	1				
Ball—selector	BLS 110	15	3				
Spring—ball	ATJ 1003§	16	3				
Plunger—interlock	NT 5025§	17	2				
Bolt—block to top cover	ATJ 1009§	18	4				
Washer—tab—bolt	NT 5202§	19	4				Not available; use ATJ 7773
Washer—tab—bolt	†ATJ 7773§	19	4				
Rod—selector—1st and reverse	NT 6096§	20	1				
Jaw and plunger—1st and reverse	NT 6105§	21	1				
Jaw	ATJ 7762§	22	1				Part No. change; was NT 6104
Plunger	NT 5994§	23	1				
Spring	ATJ 1004§	24	1				
Washer—abutment	NT 5995§	25	1				
Circlip	ISC 319	26	1				
Pin—jaw retaining	NT 5798§	27	1				Not available; use ATJ 7775
Pin—jaw retaining	†ATJ 7775§	27	1				
Tube—distance—intermediate	NT 6006§	28	1				
Tube—distance—short	NT 6005§	29	1				
Fork—1st and reverse selector	NT 5797§	30	1				
Pin—fork retaining	NT 5798§	27	1				Not available; use ATJ 7775
Pin—fork locating	†ATJ 7775§	27	1				
Rod—selector—2nd and 3rd	NT 5175§	31	1				
Pin—interlock	NT 5024§	32	1				
Pin—locking	ATJ 1034§	33	1				
Fork—selector—2nd and 3rd	ATJ 7760§	34	1				Part No. change; was NT 6102
Pin—fork locating	NT 5798§	27	1				Not available; use ATJ 7775
Pin—fork locating	†ATJ 7775§	27	1				
Tube—distance—short	NT 6005§	29	1				
Rod—selector—4th and 5th	NT 6114§	35	1				
Jaw—selector—4th and 5th	ATJ 7761§	36	1				Part No. change; was NT 6103
Pin—jaw retaining	NT 5798§	27	1				Not available; use ATJ 7775
Pin—jaw retaining	†ATJ 7775§	27	1				
Tube—distance—long	NT 6004§	37	1				
Fork—selector—4th and 5th	NT 5797§	30	1				
Pin—fork locating	NT 5798§	27	1				Not available; use ATJ 7775
Pin—fork locating	†ATJ 7775§	27	1				
Plug—gearbox filler	NT 5847§	38	1				
Washer—plain—plug	ATJ 1030§	39	1				
Dipstick—gearbox	NT 5292§	40	1				
Bolt—top cover to gearbox	HBN 0610	41	7				
Bolt—top cover to gearbox	HBN 0616	42	1				
Washer—spring—bolt	LWN 206	43	8				
Stop—5th speed	NT 6542§	44	1				Fitted on selector when tractor is fitted with 'V' twin front axle or all-metal rear wheels

§ Parts peculiar to Tractor only

See title-page for application

†Revised Information. Issue 3

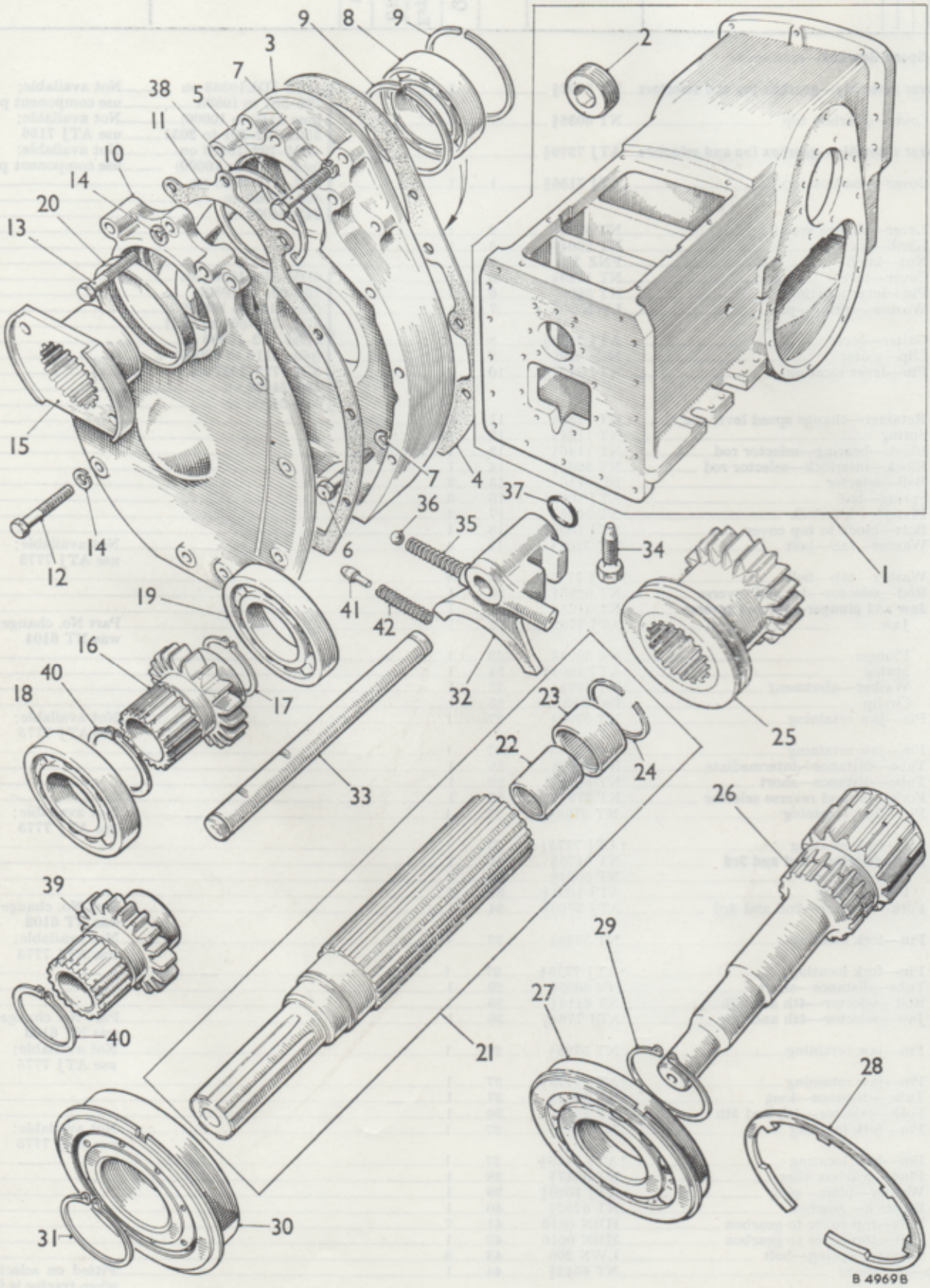
9
8
9
3
7
38
5
11
10
14
20
13
2
15
7
4
37
36
35
34
1
14
12
6
41
42
19
16
40
18
17
32
23
22
24
25
33
26
39
29
27
40
21
28
31
30
B 4969B

Issue 3

DESCRIPTION	Part No.	Illus. No.	Quantity	Stock recommds. DIST. Exp. / UK	Stock recommds. D	Change Point	REMARKS
TEN-SPEED GEARBOX							
Gearbox assembly	NSP		1				
Casing—gearbox	ATJ 9459§	1	1				
Plug—core	ATJ 7102§	2	3				
Housing—transfer gear	ATJ 7655§	3	1				
Circlip—housing	CCN 248	38	1			(G) 10B–15069	
Joint—housing	NT 6687§	4	1				
Bolt—housing to gearbox	HBN 0615	5	4				
Bolt—housing to gearbox	HBN 0610	6	6				
Washer—spring—bolt	LWN 206	7	10				
Bearing—bottom	ATJ 7480§	8	1				
Circlip	ATJ 1041§	9	2				
Cover—housing	†NT 6636§	10	1			10/42–57420 to 97526 10/60–57420 to 97526	See T.I.B. Tractor/ 133
Cover—housing	†ATJ 7828§	10	1			10/42–97527 on 10/60–97527 on	
Joint—cover	NT 6688§	11	1				
Bolt—cover to housing	HBN 0513	12	8				
Bolt—cover to housing	HBN 0509	13	3				
Washer—spring—bolt	LWN 205	14	11				
Flange—driven	†NT 6788	15	1			10/42–57436 to 93476 10/60–57436 to 93476	WSE use ATJ 9554, for details refer to page MS 4
Flange—driven	†ATJ 7822	15	1			10/42–93477 on 10/60–93477 on	
Gear—P.T.O. driving	ATJ 7524§	16	1			(G) 10B–1001 to 15068	
Circlip—gear	CCN 128	17	1				
Gear—P.T.O. driving	ATJ 7704§	39	1			(G) 10B–15069	
Circlip—gear	CCN 132	40	1				
Bearing—gear—large	ATJ 1021§	18	1				
Bearing—gear—small	ATJ 1018§	19	1				
Seal—oil	ATJ 1023§	20	1				For th is application use NT 3075
Seal—oil	NT 3075§	20	1				
Bearing	†AMK 3131		1			10/42–97527 on 10/60–97527 on	
Shaft assembly—primary—main drive	ATJ 7654§	21	1				
Bearing—spigot—front	ATJ 2089§	22	1				
Bearing—spigot—rear	ATJ 2074§	23	1				
Ring—spring	ATJ 1067§	24	1				
Gear—sliding	ATJ 7643§	25	1				
Shaft—stub	ATJ 7644§	26	1				
Bearing—shaft	ATJ 2060§	27	1				
Circlip—internal	ATJ 2016§	28	1				
Circlip—external	ATJ 1066§	29	1				
Bearing—primary shaft	6K 777	30	1				
Circlip	ESC 040	31	1				
Fork—selector—sliding gear	ATJ 7527§	32	1				
Shaft—selector—high/low range	ATJ 7528§	33	1			(G) 10B–1001 to 37152	WSE use ATJ 7900 with ATJ 7901 and ATJ 1090
Shaft—selector—high/low range	ATJ 7900§	33	1			(G) 10B–37153	
Pin—detent	ATJ 7901§	41	1				
Spring—detent	ATJ 1090§	42	1				
Pin—selector shaft	NT 5798§	34	1				WSE use ATJ 7775
Pin—selector shaft	ATJ 7775§	34	1				
Spring—ball	ATJ 1003§	35	1			(G) 10B–1001 to 37152	
Ball—selector shaft	BLS 110	36	1				
'O' ring—selector shaft	TRS 0710	37	1				

§ Parts peculiar to Tractor only

See title-page for application

†Revised Information. Issue 5

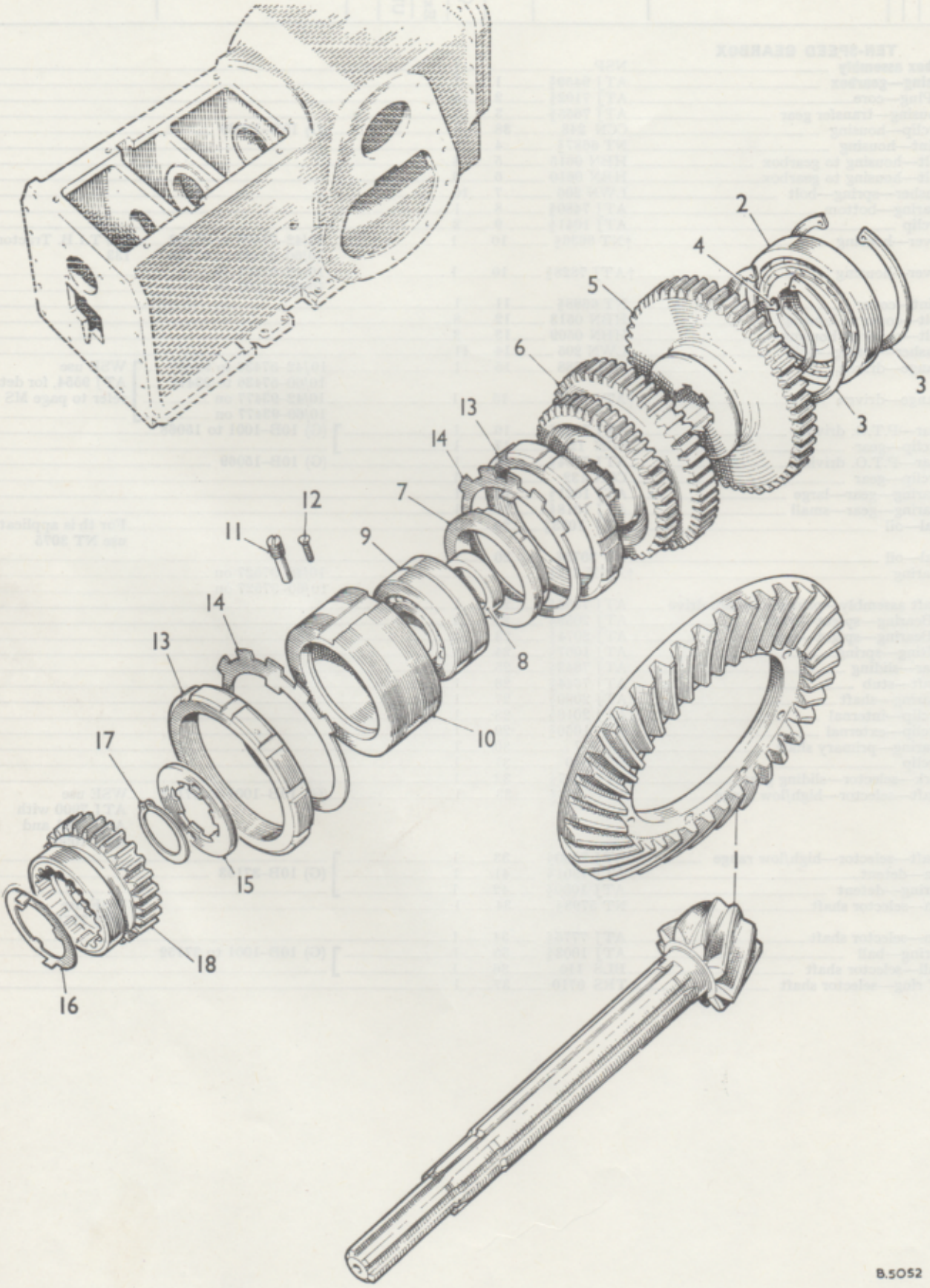
2
4
5
6
3
3
13
14
7
12
11
9
14
13
8
10
17
15
18
16
1
B.5052

DESCRIPTION	Part No.	Illus. No.	Quantity	Stock recommds. DIST. Exp.	UK	D	Change Point	REMARKS
Ten-Speed Gearbox—*continued*								
Mainshaft and crown wheel	ATJ 7422§	1	1					
Bearing—rear	NT 3059§	2	1					
Circlip—internal	ATJ 1058§	3	2					
Circlip—external	CCN 128	4	1					
Gear—1st speed	NT 113§	5	1					Not available; use ATJ 7780
Gear—1st speed	†ATJ 7780§	5	1					
Gear—2nd and 3rd speed	ATJ 7512§	6	1					
Nut—bearing	NT 4958§	7	1					
Collar—bearing thrust	NT 1119§	8	1					
Bearing—centre	†AMK 7016	9	1					Part No. duplication was NT 3057. For this application; use ATJ 1089
Bearing—centre	†ATJ 1089§	9	1					
Housing—bearing	NT 4957§	10	1					
Pin—anti-rotation	NT 4960§	11	1					
Screw—locking	CMN 0308	12	1					
Nut—lock—housing	NT 4959§	13	2					
Washer—lock—nut	NT 1747§	14	2					
Washers—mainshaft								
·169″ (4·293 mm.)	ATJ 7421§	15	A/R					
·172″ (4·369 mm.)	ATJ 7420§	15	A/R					
·175″ (4·445 mm.)	ATJ 7419§	15	A/R					
·178″ (4·521 mm.)	ATJ 7418§	15	A/R					
·181″ (4·597 mm.)	ATJ 7417§	15	A/R					
Locking	ATJ 7416§	16	1					
Circlip—bearing	ESC 040	17	1					
Gear—4th and 5th speed	ATJ 7513§	18	1					

§ Parts peculiar to Tractor only

See title-page for application

†Revised Information. Issue 2

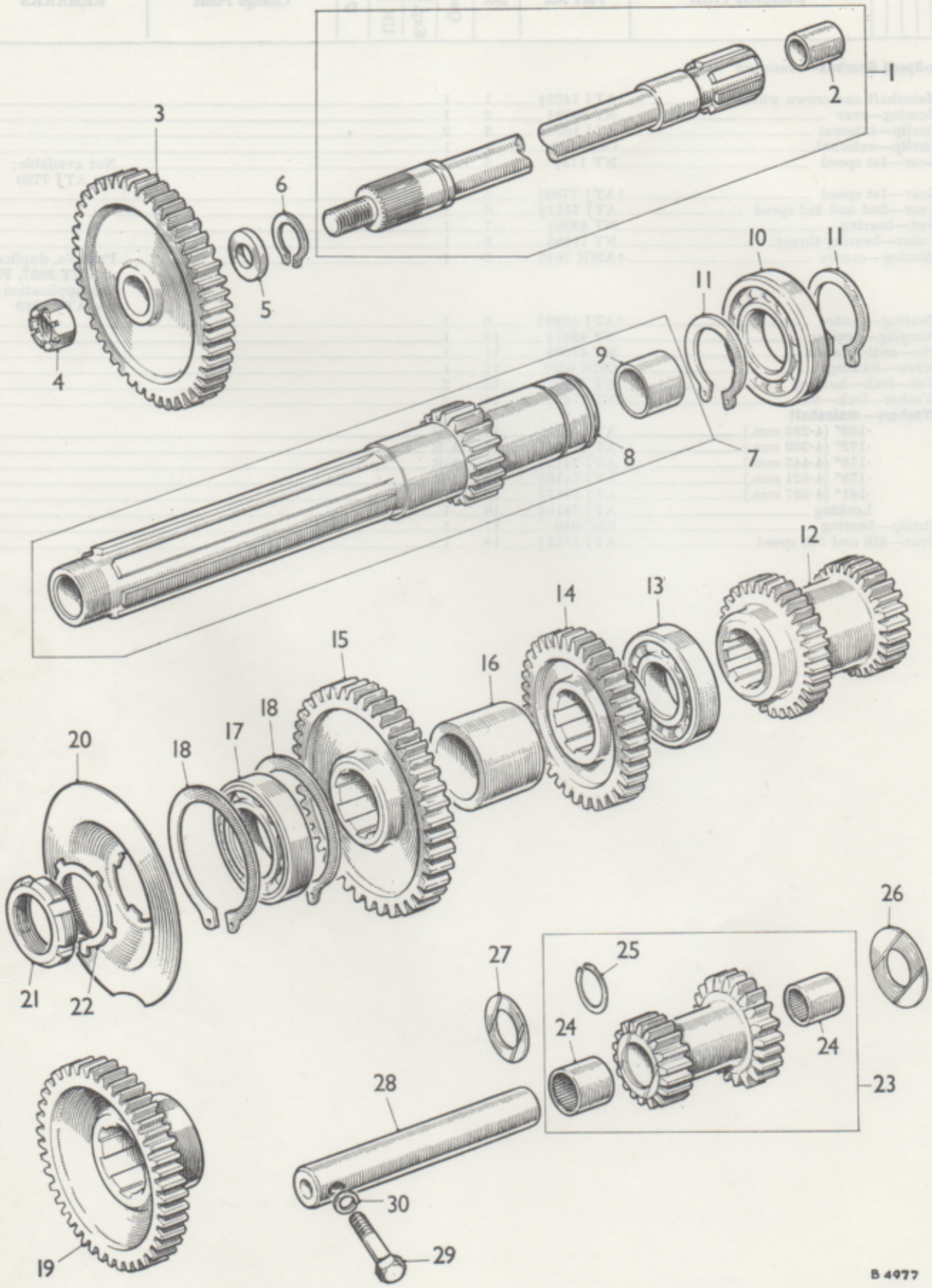
1
2
3
4
5
6
7
8
9
10
11
11
12
13
14
15
16
17
18
18
19
20
21
22
23
24
24
25
26
27
28
29
30
B 4977

DESCRIPTION	Part No.	Illus. No.	Quantity	Stock recommds. DIST. Exp.	Stock recommds. DIST. UK	Stock recommds. D	Change Point	REMARKS
Ten-Speed Gearbox—*continued*								
Sub-assembly—P.T.O. primary shaft	ATJ 7478§	1	1				10/42–57420 to 97526 10/60–57420 to 97526	See T.I.B. Tractor/133
Sub-assembly—P.T.O. primary shaft	†ATJ 7824§		1				10/42–97527 on 10/60–97527 on	
Bush—spigot	ATJ 6053§	2	1					
Gear—driven—P.T.O.	ATJ 7479§	3	1					
Nut—shaft	FNN 412	4	1				10/42–57420 to 97526 10/60–57420 to 97526	
Washer—plain	ATJ 1043§	5	1					
Nut—shaft	†53K 1172		1				10/42–97527 on 10/60–97527 on	
Washer—plain	†ATJ 7938§		1					
Circlip	CCN 120	6	1					
Layshaft assembly	ATJ 7502§	7	1					
Layshaft	NSP	8	1					
Bush	ATJ 1032§	9	1					
Bearing—rear	ATJ 1020§	10	1					
Circlip—bearing	ESC 050	11	2					
Gear—2nd and 3rd speed	ATJ 7504§	12	1					
Bearing—centre	ATJ 1020§	13	1					
Gear—4th speed	ATJ 7505§	14	1					
Gear—constant mesh—low range	ATJ 7506§	15	1					
Piece—distance	NT 6774§	16	1					
Bearing—front	ATJ 1020§	17	1					
Circlip—bearing	ISC 390	18	2					
Gear—constant mesh—high range	ATJ 7507§	19	1					
Flinger—oil	ATJ 7631§	20	1					
Locknut—layshaft	NT 6724§	21	1				10/42–57420 to 97322 10/60–57420 to 97322	WSE use ATJ 7854 with ATJ 7855
Washer—lock	NT 6725§	22	1					
Locknut—layshaft	†ATJ 7854§		1				10/42–97527 on 10/60–97527 on	
Washer—lock	†ATJ 7855§		1					
Reverse gear assembly	ATJ 7508§	23	1					
Bearing—needle roller	ATJ 2082§	24	2					
Circlip—bearing	ATJ 1068§	25	2					
Washer—thrust	ATJ 7665§	26	1					
Washer—thrust	ATJ 7666§	27	1					
Shaft—reverse gear	ATJ 7511§	28	1					
Bolt—shaft	HBN 0618	29	1					
Washer—spring—bolt	LWN 206	30	1					

§ Parts peculiar to Tractor only

See title-page for application

†Revised Information. Issue 2

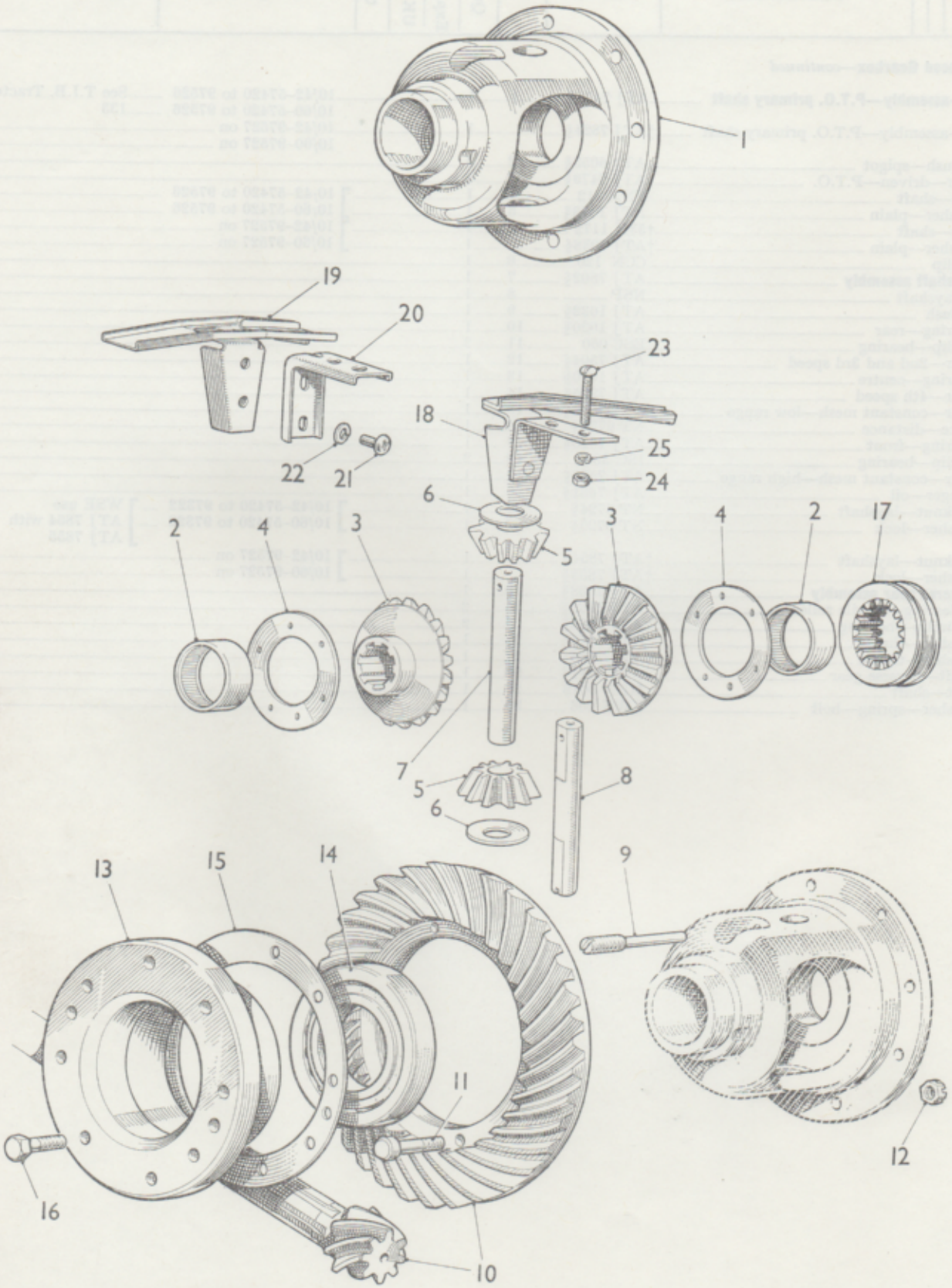
1
19
20
23
18
25
24
22
21
6
5
2
4
3
3
4
2
17
7
5
6
8
13
15
14
9
11
12
16
10
B 3600B.

DESCRIPTION	Part No.	Illus. No.	Quantity	Stock recommds. DIST. Exp.	Stock recommds. DIST. UK	Stock recommds. D	Change Point	REMARKS
Ten-Speed Gearbox—*continued*								
Housing—differential	ATJ 7446§	1	1				(G) 10B 57420 to 90218	Not available; use ATJ 7801 with 3 off ATJ 1076
Housing—differential	†ATJ 7801§	1	1				(G) 10B 90219 on	
Ring—spring	†ATJ 1076§		3					
Bearing—needle roller	ATJ 2011§	2	2					
Gear	ATJ 7437§	3	2					
Washer—thrust—gear	NT 3077§	4	2					
Pinion	NT 5144§	5	2				(G) 10B 1001 to 11137	Not available; use ATJ 7803 with 1 off ATJ 7776
Pinion	ATJ 7720§	5	2				(G) 10B 11138 to 21190	
Pinion	†ATJ 7778§		2				(G) 10B 21191 to 33228	Not available; use ATJ 7803
	†ATJ 7797§		2					
	†ATJ 7803§		3				(G) 10B 33229	
Washer—thrust—pinion	NT 5145§	6	2					
Shaft—pinion	ATJ 7495§	7	1				(G) 10B 1001 to 11137	Not available; use ATJ 7776 with 2 off ATJ 7803
Shaft—pinion	ATJ 7719§	8	1				(G) 10B 11138 to 21190	
Shaft—pinion	ATJ 7776§		1				(G) 10B 21191 on	
Pin—pinion shaft	NT 5917§	9	1					
Mainshaft and crown wheel	ATJ 7422§	10	1					
Bolt—crown wheel	NT 5812§	11	8					
Nut—bolt	FNN 307	12	8					
Housing—bearing	ATJ 7667§	13	2					
Bearing	ATJ 7067§	14	2					
Shims—bearing housing								
·003″ (·076 mm.)	NT 1187§	15	A/R					
·010″ (·254 mm.)	NT 1188§	15	A/R					
·025″ (·635 mm.)	NT 1189§	15	A/R					
Bolt—bearing housing to gearbox	ATJ 1007§	16	16					
Ring—locking—differential	ATJ 7542§	17	1					
Catcher—oil	NT 5453§	18	1				(G) 10B 1001 to 11137	
Catcher—oil	ATJ 3219§	19	1				(G) 10B 11138 on	
Bracket—oil catcher	ATJ 3223§	20	1					
Screw—bracket to oil catcher	PMN 0407	21	2					
Washer—spring—screw	LWN 204	22	2					
Screw—oil catcher	NT 5846§	23	2					
Nut—screw	FNN 105	24	2					
Washer—spring—nut	LWN 205	25	2					

§ Parts peculiar to Tractor only

See title-page for application

†Revised Information. Issue 4

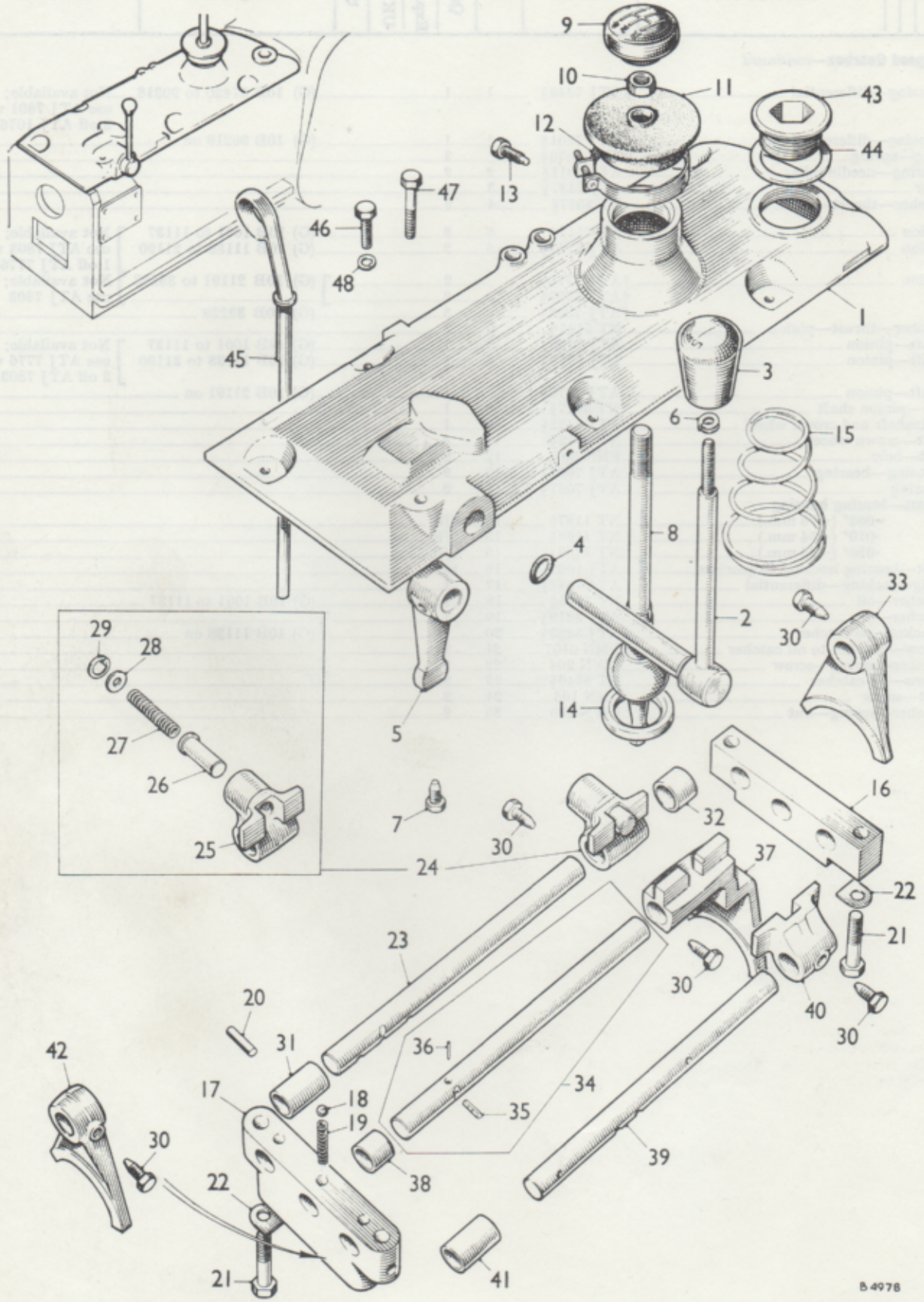
9
10
11
43
12
44
13
47
46
48
1
45
3
6
15
8
4
33
2
30
29
28
14
5
27
26
16
7
32
25
30
24
37
22
21
23
30
40
30
20
31
36
42
17
18
34
19
35
30
39
22
38
21
41
B 4978

DESCRIPTION	Part No.	Illus. No.	Quantity	Stock recommds. DIST. Exp.	Stock recommds. DIST. UK	Stock recommds. D	Change Point	REMARKS
Ten-Speed Gearbox—*continued*								
Cover—gearbox top	ATJ 7526§	1	1					
Lever—change speed—high/low range	ATJ 7529§	2	1					
Knob—lever	ATJ 7533§	3	1					
'O' ring—lever shaft	TRS 0912	4	1					
Lever—operating—high/low range	ATJ 7532§	5	1					
Washer—Thackeray	†ATJ 9331§	6	1					Not available; use 2K 2562
Washer—Thackeray	†2K 2562	6	1					
Pin—operating shaft	ATJ 7384§	7	1					
Lever—change speed	NT 5796§	8	1					
Knob—lever	NT 5804§	9	1					
Nut—lock—knob	FNZ 208	10	1					
Gaiter—lever	ATJ 7376§	11	1					
Clip—gaiter	HCS 340	12	1					
Pin—lever locating	ATJ 7157§	13	1					
Retainer—change speed lever	NT 1138§	14	1					
Spring	NT 1134§	15	1					
Block—bearing—selector rod	NT 1140§	16	1					
Block—interlock—selector rod	NT 5201§	17	1					
Ball—selector	BLS 110§	18	3					
Spring—ball	ATJ 1003§	19	3					
Plunger—interlock	NT 5025§	20	2					
Bolt—block to top cover	ATJ 1009§	21	4					
Washer—tab—bolt	NT 5202§	22	4					Not available; use ATJ 7773
Washer—tab—bolt	†ATJ 7773§	22	4					
Rod—selector—1st and reverse	NT 6096§	23	1					
Jaw and plunger—1st and reverse	NT 6105§	24	1					
Jaw	ATJ 7762§	25	1					Part No. change; was NT 6104
Plunger	NT 5994§	26	1					
Spring	ATJ 1004§	27	1					
Washer—abutment	NT 5995§	28	1					
Circlip	ISC 319	29	1					
Pin—jaw retaining	NT 5798§	30	1					Not available; use ATJ 7775
Pin—jaw retaining	†ATJ 7775§	30	1					
Tube—distance—intermediate	NT 6006§	31	1					
Tube—distance—short	NT 6005§	32	1					
Fork—1st and reverse selector	NT 5797§	33	1					
Pin—fork retaining	NT 5798§	30	1					Not available; use ATJ 7775
Pin—fork locating	†ATJ 7775§	30	1					
Rod—selector—2nd and 3rd	NT 5175§	34	1					
Pin—interlock	NT 5024§	35	1					
Pin—locking	ATJ 1034§	36	1					
Fork—selector—2nd and 3rd	ATJ 7760§	37	1					Part No. change; was NT 6102
Fork—selector—2nd and 3rd	NT 6102§	37	1					
Pin—fork locating	NT 5798§	30	1					Not available; use ATJ 7775
Pin—fork locating	†ATJ 7775§	30	1					
Tube—distance—short	NT 6005§	38	1					
Rod—selector—4th and 5th	NT 6114§	39	1					
Jaw—selector—4th and 5th	ATJ 7761§	40	1					Part No. change; was NT 6103
Pin—jaw retaining	NT 5798§	30	1					Not available; use ATJ 7775
Pin—jaw retaining	†ATJ 7775§	30	1					
Tube—distance—long	NT 6004§	41	1					
Fork—selector—4th and 5th	NT 5797§	42	1					
Pin—fork locating	NT 5798§	30	1					Not available; use ATJ 7775
Pin—fork locating	†ATJ 7775§	30	1					
Plug—gearbox filler	NT 5847§	43	1					
Washer—plain—plug	ATJ 1030§	44	1					
Dipstick—gearbox	NT 5292§	45	1					
Bolt—top cover to gearbox	HBN 0610	46	7/6					Quantity reduced at (G) 10B 37153
Bolt—top cover to gearbox	HBN 0616	47	2/1					
Washer—spring—bolt	LWN 206	48	8					
Stud—top cover to gearbox	†ATJ 7916§		1				(G) 10B 37153	See Technical Information Bulletin Tractor/94
Bracket	†ATJ 7915§		1					
Spring	†BTJ 239§		1					
Nut—lock	†LNN 106		1					
Nut—lock	†FNN 606		1					

§ Parts peculiar to Tractor only

See title-page for application

†Revised Information. Issue 4

		DESCRIPTION	Part No.	Illus. No.	Quantity	Stock recommnds. DIST. Sub	Stock recommnds. DIST. NO	Stock recommnds. D	Change Point	REMARKS
		Ten-speed Gearbox—continued								
		Cover—gearbox top	AT] 7295§	1	1					
		Lever—change speed—highlow range	AT] 7329§	2	1					
		Knob—lever	AT] 7329§	3	1					
		O ring—lever shaft	TRS 0017	4	1					
		Lever—operating—highlow range	AT] 7323§	5	1					
		Washer—Thackray	{AT] 8921§	6	1					Not available;
										see 2K 5802
		Washer—Thackray	{2K 2802	6	1					
		Pin—operating shaft	AT] 7323§	7	1					
		Lever—change speed	NT 6780§	8	1					
		Knob—lever	NT 6604	9	1					
		Nut—lock—knob	NNZ 308	10	1					
		Cotter—lever	AT] 7279§	11	1					
		Cup—cotter	HCS 340	12	1					
		Pin—lever locating	AT] 7327§	13	1					
		Retainer—change speed lever	NT 1434§	14	1					
		Spring	NT 1434§	15	1					
		Block—locating—selector rod	NT 1140§	16	1					
		Block—interlock—selector rod	NT 6520§	17	1					
		Ball—selector	HCS 1170	18	3					
		Spring—ball	AT] 1005§	19	3					
		Plunger—interlock	NT 5653§	20	2					
		Bolt—block to top cover	AT] 1005§	21	4					
		Washer—tab—bolt	NT 4807§	22	4					Not available;
										see AT] 1775
		Washer—tab—bolt	{AT] 1775§	22	4					
		Rod—selector—1st and reverse	NT 6800§	23	1					
		Jaw and plunger—1st and reverse	NT 6793§	24	1					
		Jaw	AT] 7282§	25	1					Part No. change;
										was NT 6101
		Plunger—	NT 5804§	26	1					
		Spring	AT] 1004§	27	1					
		Washer—abutment	NT 5805§	28	1					
		Circlip	HSC 319	29	1					
		Pin—jaw retaining	NT 6799§	30	1					Not available;
										see AT] 1776
		Pin—jaw retaining	{AT] 1776§	30	1					
		Tube—distance—intermediate	NT 6806§	31	1					
		Tube—distance—short	NT 6807§	32	1					
		Rod—1st and reverse selector	NT 6795§	33	1					
		Pin—lock retaining	NT 6796§	34	1					Not available;
										see AT] 1776
		Pin—lock locating	{AT] 1776§	34	1					
		Rod—selector—2nd and 3rd	NT 6793§	35	1					
		Pin—interlock	NT 6794§	36	1					
		Pin—locking	AT] 1004§	37	1					
		Fork—selector—2nd and 3rd	AT] 7280§	37	1					Part No. change;
										was NT 6102
		Fork—selector—2nd and 3rd	NT 6808§	37	1					
		Pin—lock locking	NT 6798§	38	1					Not available;
										see AT] 1776
		Pin—lock locating	{AT] 1776§	38	1					
		Tube—distance—long	NT 6809§	39	1					
		Rod—selector—4th and 5th	NT 6797§	40	1					
		Pin—lock retaining	NT 6799§	41	1					Part No. change;
										was NT 6103
		Pin—lock locating	{AT] 1776§	41	1					Not available;
										see AT] 1776
		Pin—jaw retaining	NT 6798§	30	1					
		Pin—jaw retaining	{AT] 1776§	30	1					
		Tube—distance—long	NT 6809§	42	1					
		Rod—selector—4th and 5th	NT 6797§	43	1					
		Pin—lock locating	NT 6798§	38	1					Not available;
										see AT] 1776
		Pin—lock locating	{AT] 1776§	38	1					
		Plug—gearbox filler	NT 5807§	44	1					
		Washer—plain—plug	AT] 1009§	45	1					
		Footstalk—gearbox	NT 9929§	46	1					
		Bolt—top cover to gearbox	{HNN 8610	47	7/8				Quantity reduced	
		Nut—top cover to gearbox	{HNN 9003	47	7/8				at (G) 10th 37153	
		Washer—spring—bolt	LWN 308	48	8					
		Stud—top cover to gearbox	AT] 7281§	1						
		Bracket	AT] 7910§	1						See Technical
		Spring	AT] 7908§	1			(G) 10th 37153			Information
		Nut—lock	{EXN 308	1						Bulletin
		Nut—lock	{FAN 808	1						No. 1[illegible]

§ Parts peculiar to Tractor only

See title-page for applications

Revised Information. Issue 4

PRINTED IN ENGLAND BY THE
NUFFIELD PRESS LIMITED
COWLEY, OXFORD
(61097) 1/65 3,200