CATERPILLAR®

SEBP3969
November 2003

# Parts Manual

SIS

See "General Information" for New Parts Manual Features.

## 428D Backhoe Loader

BXC1-Up (Machine)
DSX1-Up (Machine)
CRS1-Up (Engine)

**Powered By 3054C Engine**

**This Parts Manual is also Available in .PDF Fromat on Compact Disc (CD-ROM)-Caterpillar Form No. SERP3969**

# Product and Dealer Information

**Note:** For product identification plate locations, see the section “Product Identification Information” in the Operation and Maintenance Manual.

**Delivery Date:** _____

## Product Information

Model: _____

Product Identification Number: _____

Engine Serial Number: _____

Transmission Serial Number: _____

Generator Serial Number: _____

Attachment Serial Numbers: _____

Attachment Information: _____

Customer Equipment Number: _____

Dealer Equipment Number: _____

## Dealer Information

Name: _____ Branch: _____

Address: _____

_____

_____

| | Dealer Contact | Phone Number | Hours |
|---|---|---|---|
| Sales: | | | |
| Parts: | | | |
| Service: | | | |

# Informations produit et concessionnaire

**Nota:** Voir l'emplacement de la plaque signalétique du produit au chapitre "Informations produit" du guide d'utilisation et d'entretien.

**Date de livraison:** _____

## Informations produit

Modèle: _____

Numéro d'identification produit: _____

Numéro de série du moteur: _____

Numéro de série de la boîte de vitesses: _____

Numéro de série de l'alternateur: _____

Numéros de série d'équipement: _____

Informations sur l'équipement: _____

Numéro matériel client: _____

Numéro matériel concessionnaire: _____

## Informations concessionnaire

Nom: _____ Agence: _____

Adresse: _____

_____

_____

| | Contact concessionnaire | Numéro de téléphone | Heures |
|---|---|---|---|
| Ventes: | | | |
| Pièces: | | | |
| Service: | | | |

# Información del Producto/Distribuidor

**Nota:** Para saber la ubicación de las placas de identificación del producto, ver la sección “Información sobre identificación del producto” en el Manual de Operación y Mantenimiento.

**Fecha de entrega:** _____

## Información del producto

Modelo: _____

Número de identificación del producto: _____

Número de serie del motor: _____

Número de serie de la transmisión: _____

Número de serie del generador: _____

Números de serie de los accesorios: _____

Información sobre los accesorios: _____

Número del equipo del cliente: _____

Número del equipo del distribuidor: _____

## Información del distribuidor

Nombre: _____ Sucursal: _____

Dirección: _____

_____

_____

| | Comunicación con el distribuidor | Número de teléfono | Horas |
|---|---|---|---|
| Ventas: | | | |
| Piezas: | | | |
| Servicio: | | | |

# Informações Sobre Produto e Revendedor

**Nota:** Para localizações da placa de identificação do produto, consulte a seção, “Informações Sobre Identificação do Produto” no Manual de Operação e Manutenção.

**Data de Entrega:** _____

## Informações Sobre o Produto

Modelo: _____

Número de Identificação do Produto: _____

Número de Série do Motor: _____

Número de Série da Transmissão: _____

Número de Série do Gerador: _____

Números de Série de Acessórios: _____

Informações Sobre Acessórios: _____

Número do Equipamento do Cliente: _____

Número do Equipamento do Revendedor: _____

## Informações Sobre o Revendedor

Nome: _____ Filial: _____

Endereço: _____

_____

_____

| | Contato do Revendedor | Telefone | Horas |
|---|---|---|---|
| Vendas: | | | |
| Peças: | | | |
| Serviço: | | | |

# Produkt- und Händlerinformation

**Anmerkung:** Für die Lage der Produkt-Identnummer und Seriennummern siehe Abschnitt "Produkt-Identinformation" im Betriebs- und Wartungshandbuch.

**Lieferdatum:** _____

## Produkt-Identinformation

Modell: _____

Produkt-Identnummer: _____

Seriennummer des Motors: _____

Seriennummer des Getriebes: _____

Seriennummer des Generators: _____

Seriennummern der Arbeitsgeräte: _____

Arbeitsgeräteinformation: _____

Kundennummer: _____

Händlernummer: _____

## Händlerinformation

Name: _____ Niederlassung: _____

Adresse: _____

_____

_____

| | Kontaktperson beim Händler | Telefon | Dienststunden |
|---|---|---|---|
| Verkauf: | | | |
| Ersatzteile: | | | |
| Service: | | | |

# MEMORANDA

# TABLE OF CONTENTS


| Name | Page |
|---|---|
| **GENERAL INFORMATION** | A23 |
| **REPAIR ALTERNATIVES** | A42 |
| **SUPPLEMENTAL COOLANT ADDITIVES** | A47 |
| **MAINTENANCE PARTS** | A52 |
| **INDEX** | A78 |
| **MACHINE ARRANGEMENT** | 1 |
| BACKHOE AR-EXTENDABLE STICK | 1 |
| BACKHOE AR-STANDARD STICK | 9 |
| BACKHOE AR | 10 |
| BACKHOE AR-STANDARD STICK | 11 |
| BACKHOE AR | 13 |
| BACKHOE AR-STANDARD STICK | 14 |
| CHASSIS AR | 15 |
| COMMON AR | 16 |
| CONVERSION AR-CERTIFICATION | 16 |
| **ENGINE ARRANGEMENT** | 20 |
| ENGINE AR | 20 |
| ENGINE AR-PRIMARY | 22 |
| **BASIC ENGINE** | 24 |
| CAMSHAFT GP | 24 |
| COVER GP-VALVE MECHANISM | 25 |
| CRANKSHAFT GP | 27 |
| CYLINDER BLOCK GP | 29 |
| CYLINDER HEAD GP | 32 |
| DRIVE GP-FAN | 34 |
| FLYWHEEL GP | 35 |
| HOUSING GP-FLYWHEEL | 36 |
| HOUSING GP-FRONT | 37 |
| LIFTING GP-ENGINE | 39 |
| MOUNTING GP-ENGINE | 40 |
| MOUNTING GP-ENGINE & TMSN | 41 |
| PAN GP-OIL | 43 |
| PISTON & ROD GP | 45 |
| PLUG GP-ENGINE | 47 |
| PULLEY GP-CRANKSHAFT | 49 |
| VALVE MECHANISM GP | 50 |
| **LUBRICATION SYSTEM** | 51 |
| FILLER GP-ENGINE OIL | 51 |
| PUMP GP-ENGINE OIL | 52 |
| **COOLING SYSTEM** | 53 |
| CONNECTION GP-WATER | 53 |
| COOLER GP-FLTR BASE & ENG OIL | 54 |
| FAN GP-SUCTION | 56 |
| FITTING GP-HEATER & AIR COND | 58 |
| LINES GP-POWER TRAIN COOLER | 59 |
| PUMP GP-WATER | 63 |
| RADIATOR & FAN GP | 65 |
| RADIATOR & HYD OIL COOLER GP | 67 |
| **AIR INLET AND EXHAUST SYSTEM** | 73 |
| AIR CLEANER GP | 73 |
| COVER GP-AIR INLET | 76 |
| EXTENSION GP-EXHAUST | 77 |
| INDICATOR GP-AIR FILTER CHANGE | 78 |
| LINES GP-AIR | 80 |
| MUFFLER GP | 83 |
| TURBOCHARGER GP | 84 |
| **FUEL SYSTEM** | 86 |
| CONTROL GP-GOV & ACCELERATOR | 86 |
| FILTER GP-FUEL | 88 |
| LINES GP-FUEL | 90 |
| PUMP GP-FUEL INJECTION | 92 |
| PUMP GP-FUEL PRIMING | 98 |
| SEPARATOR GP-WATER | 99 |
| TANK & MTG GP-FUEL | 100 |
| TANK GP-FUEL | 101 |
| **ELECTRICAL AND STARTING SYSTEM** | 103 |
| ALTERNATOR GP-CHARGING | 103 |
| BATTERY GP | 104 |
| CONTROL GP-POSITION | 112 |
| GLOW PLUG GP | 113 |
| HEATER GP-JACKET WATER | 114 |
| INSTALLATION GP-SECURITY | 115 |
| LAMP GP-FLOOD | 117 |
| LAMP GP-HEAD & SIGNAL | 120 |
| LAMP GP-REGISTRATION PLATE | 128 |
| LAMP GP-STOP & TAIL | 129 |
| LAMP GP-WARNING BEACON | 131 |
| LIGHTING GP-FLOOD | 133 |
| LIGHTING GP-ROADING | 144 |
| LIGHTING GP-WARNING | 161 |
| LIGHTING GP-WARNING BEACON | 163 |
| PLUG GP-CONNECTOR | 165 |
| STARTING MOTOR GP-ELECTRIC | 166 |
| SWITCH GP-PRESSURE | 169 |
| SWITCH GP-TEMPERATURE | 170 |
| WARNING GP-BACKUP | 171 |
| WIRING GP-AIR CONDITIONER | 173 |
| WIRING GP-AUTOSHIFT | 176 |
| WIRING GP-CAB | 178 |
| WIRING GP-CONSOLE | 183 |
| WIRING GP-ENGINE | 189 |
| WIRING GP-HEATER | 193 |
| WIRING GP-KICKOUT & POSITIONER | 195 |
| WIRING GP-PLATFORM | 196 |
| WIRING GP-POWER RECEPTACLE | 202 |
| WIRING GP-REAR | 203 |
| WIRING GP-RIDE CONTROL | 206 |

# TABLE OF CONTENTS


| Name | Page |
|---|---|
| WIRING GP-SENSOR | 214 |
| WIRING GP-STABILIZER ALARM | 215 |
| WIRING GP-STEERING | 217 |
| **POWER TRAIN** | 218 |
| AXLE GP-DRIVE & STEERING | 218 |
| AXLE GP-REAR | 220 |
| CONTROL GP-DIFFERENTIAL LOCK | 225 |
| CONTROL GP-TRANSMISSION | 226 |
| DIFFERENTIAL & BEVEL GEAR GP | 227 |
| DIFFERENTIAL GP | 229 |
| DRIVE AR-BACKHOE LOADER | 230 |
| DRIVE GP-FLEXIBLE COUPLING | 231 |
| FILLER GP-POWER TRAIN OIL | 232 |
| HOUSING & FLANGE GP-AXLE | 234 |
| LOCKOUT GP-FOURTH GEAR | 236 |
| MOUNTING GP-AXLE | 237 |
| PLANETARY GP-FINAL DRIVE | 238 |
| POWER TRAIN AR | 239 |
| SHAFT GP-DRIVE | 241 |
| TRANSMISSION & MOUNTING GP | 245 |
| TRANSMISSION AR-DIRECT DRIVE | 247 |
| TRANSMISSION AR-POWER SHIFT | 247 |
| TRANSMISSION GP-DIRECT DRIVE | 248 |
| TRANSMISSION GP-POWER SHIFT | 254 |
| VALVE GP-RELIEF | 260 |
| VALVE GP-SOLENOID | 261 |
| VALVE GP-TIRE | 266 |
| WHEEL & TIRE AR | 267 |
| WHEEL & TIRE GP | 272 |
| **BRAKING SYSTEM** | 289 |
| BRAKE GP-PARKING | 289 |
| CONTROL GP-PARKING BRAKE | 290 |
| CONTROL GP-SERVICE BRAKE | 292 |
| LEVER GP-HAND CONTROL | 295 |
| RESERVOIR GP-BRAKE | 296 |
| **STEERING SYSTEM** | 297 |
| CONTROL GP-STEERING | 297 |
| KNOB GP-STEERING | 299 |
| LINES GP-STEERING | 300 |
| PUMP GP-METERING | 303 |
| STEERING WHEEL GP | 304 |
| VALVE GP-PRIORITY | 305 |
| **FRAME AND BODY** | 306 |
| BOX GP-BATTERY | 306 |
| BUMPER GP-FRONT | 311 |
| COUNTERWEIGHT GP | 312 |
| DOOR GP-BATTERY | 316 |
| FENDER GP-FRONT | 317 |
| FENDER GP-REAR | 319 |
| FLOORPLATE GP | 320 |
| FRAME GP-LOADER | 322 |
| FRAME GP-SLIDING | 324 |
| FRAME GP-SWING | 326 |
| GUARD GP-DRIVE SHAFT | 331 |
| GUARD GP-LIGHTING | 332 |
| GUARD GP-LINES | 334 |
| HOOD & GUARD GP | 336 |
| HOOD GP-ENGINE | 338 |
| LINER GP-SOUND SUPPRESSION | 341 |
| MOUNTING GP-REGISTRATION | 342 |
| REFLECTOR GP | 344 |
| SUPPRESSION AR-SOUND | 345 |
| **HYDRAULIC SYSTEM** | 346 |
| ACCUMULATOR GP-RIDE CONTROL | 346 |
| CONNECTOR GP-VALVE | 347 |
| CONTROL AR-RIDE | 348 |
| CONTROL GP-HANDLE | 350 |
| CONTROL GP-HYDRAULIC HAND | 352 |
| CONTROL GP-HYDRAULIC PEDAL | 365 |
| CONVERSION GP-HYD HAND CONTROL | 369 |
| COUPLING GP | 370 |
| COVER & VALVE GP-BANK | 371 |
| CYLINDER GP-BACKHOE BUCKET | 372 |
| CYLINDER GP-BOOM | 376 |
| CYLINDER GP-EXTENDABLE STICK | 378 |
| CYLINDER GP-LIFT | 381 |
| CYLINDER GP-MULTIPURPOSE BUKT | 382 |
| CYLINDER GP-STABILIZER | 384 |
| CYLINDER GP-STICK | 385 |
| CYLINDER GP-SWING | 386 |
| CYLINDER GP-TILT | 388 |
| DRAIN GP-HYDRAULIC | 390 |
| HYDRAULIC AR | 391 |
| KIT-RIDE CONTROL | 397 |
| LINES GP-BACKHOE | 398 |
| LINES GP-BACKHOE AUXILIARY | 402 |
| LINES GP-BOOM | 440 |
| LINES GP-BUCKET CYLINDER | 441 |
| LINES GP-DRAIN | 443 |
| LINES GP-EXTENDABLE STICK | 445 |
| LINES GP-LIFT CYLINDER | 446 |
| LINES GP-LOAD CONTROL VALVE | 451 |
| LINES GP-LOADER AUXILIARY | 462 |
| LINES GP-MULTIPURPOSE BUCKET | 466 |
| LINES GP-PILOT | 474 |
| LINES GP-PUMP | 477 |
| LINES GP-RETURN | 486 |
| LINES GP-RIDE CONTROL | 487 |
| LINES GP-SIDESHIFT LOCK | 489 |
| LINES GP-STABILIZER | 497 |
| LINES GP-STICK | 501 |
| LINES GP-SWING | 509 |
| LINES GP-TILT CYLINDER | 519 |

# TABLE OF CONTENTS


| Name | Page |
|---|---|
| LOCK GP-HYDRAULIC FOOT CONTROL | 523 |
| LOCK GP-HYDRAULIC HAND CONTROL | 524 |
| MOUNTING GP-BANK VALVE | 525 |
| MOUNTING GP-CYLINDER | 527 |
| MOUNTING GP-HYDRAULIC PUMP | 528 |
| MOUNTING GP-LINES | 529 |
| PUMP GP-PISTON | 533 |
| ROTATING GP-PUMP | 536 |
| SHAFT GP-POWER TAKE-OFF | 537 |
| STABILIZER AR | 538 |
| TANK GP-HYDRAULIC | 539 |
| VALVE & MTG GP-BANK | 541 |
| VALVE AR-BANK 4 | 542 |
| VALVE AR-BANK 5 | 542 |
| VALVE AR-BANK 6 | 543 |
| VALVE GP-AUXILIARY | 544 |
| VALVE GP-BANK 2 | 547 |
| VALVE GP-BANK 3 | 549 |
| VALVE GP-BANK 4 | 551 |
| VALVE GP-BANK 5 | 553 |
| VALVE GP-BANK 6 | 556 |
| VALVE GP-CHECK | 558 |
| VALVE GP-CONTROL | 559 |
| VALVE GP-LOAD CONTROL | 579 |
| VALVE GP-PUMP CONTROL | 581 |
| VALVE GP-SOLENOID | 584 |
| **IMPLEMENTS** | 586 |
| ARM GP-LIFT | 586 |
| BOOM GP | 588 |
| BRACKET GP-TRANSPORT | 590 |
| HOUSING AS-EXTENDABLE STICK | 592 |
| LINK GP-SHIPPING | 593 |
| LINKAGE GP-BACKHOE BUCKET | 594 |
| LOADER AR | 597 |
| LOCK GP-STABILIZER LEG | 598 |
| LOCK GP-TRANSPORT | 599 |
| MOUNTING GP-STICK | 604 |
| PAD GP-STABILIZER | 605 |
| STABILIZER GP-BACKHOE | 606 |
| STICK GP-EXTENDABLE | 609 |
| STICK GP-HOE | 613 |
| **WORK TOOLS** | 615 |
| BUCKET AR-MULTIPURPOSE | 615 |
| BUCKET AS-GENERAL PURPOSE | 621 |
| BUCKET GP-HOE | 625 |
| BUCKET GP-MULTIPURPOSE | 666 |
| COUPLER GP-QUICK | 677 |
| EDGE GP-CUTTING | 683 |
| FORK AR | 685 |
| FORK GP | 686 |
| GUARD GP-BUCKET | 687 |
| MOUNTING GP-BUCKET | 689 |
| MOUNTING GP-FORK | 693 |
| SHIPPING AR-BUCKET | 694 |
| STOP GP-BUCKET | 695 |
| TOOTH GP-UNI | 697 |
| **OPERATOR STATION** | 698 |
| AIR CONDITIONER & MOUNTING GP | 698 |
| AIR CONDITIONER GP | 700 |
| ARMREST GP | 702 |
| CAB AR | 703 |
| CAB AR-ENCLOSED ROPS | 705 |
| CAB GP | 707 |
| CANOPY AR | 711 |
| CANOPY GP-OPEN ROPS | 712 |
| COMPARTMENT GP-LITERATURE | 713 |
| COMPRESSOR GP-REFRIGERANT | 714 |
| CONDENSER & MTG GP-REFRIGERANT | 716 |
| CONSOLE GP-FRONT | 717 |
| CONSOLE GP-OPERATOR | 719 |
| CONSOLE GP-SIDE | 721 |
| COVER GP-CONSOLE | 727 |
| COVER GP-FIREWALL | 728 |
| COVER GP-POST | 730 |
| DOOR GP-LH | 731 |
| DOOR GP-RH | 733 |
| DUCT GP-AIR | 735 |
| FLOOR MAT GP | 739 |
| HEATER & MTG GP-CAB | 741 |
| HEATER GP-CAB | 743 |
| HORN GP-ELECTRIC | 745 |
| LEVER GP-GOVERNOR CONTROL | 746 |
| LINES GP-HEATER | 747 |
| LINES GP-HEATER & AIR COND | 749 |
| MIRROR GP-REAR VIEW | 751 |
| MODULE GP-WARNING INDICATOR | 753 |
| MOTOR GP-WINDOW WIPER | 755 |
| MOUNTING GP-INSTRUMENT PANEL | 756 |
| PANEL GP-INSTRUMENT | 760 |
| PEDAL GP-GOVERNOR | 761 |
| SEAT BELT GP | 762 |
| SEAT GP | 763 |
| SEAT GP-SUSPENSION | 770 |
| SUPPRESSION GP-SOUND | 776 |
| SUSPENSION GP-SEAT | 778 |
| TACHOMETER GP-ELECTRIC | 781 |
| TRIM GP-CAB | 783 |
| VISOR GP-CAB | 784 |
| WASHER GP-WINDOW | 785 |
| WINDOW GP-CAB | 787 |
| WINDOW GP-DOOR | 793 |
| WIPER GP-WINDOW | 797 |

# TABLE OF CONTENTS


| Name | Page | Name | Page |
|---|---|---|---|
| **SERVICE EQUIPMENT AND SUPPLIES** | 799 | | |
| FILM GP | 799 | | |
| INSTALLATION AR-WHEEL CHOCK | 801 | | |
| LOCK GP-VANDALISM | 802 | | |
| PLATE & FILM GP | 804 | | |
| PLATE AS-SIDE REFLECTIVE | 809 | | |
| **PART NUMBER INDEX** | B1 | | |

# TABLE DES MATIÈRES


| Désignation | Page |
|---|---|
| **GÉNÉRALITÉS** | A26 |
| **OPTIONS DE RÉPARATION** | A43 |
| **ADDITIFS POUR LIQUIDE DE REFROIDISSEMENT** | A48 |
| **PIÈCES DE RECHANGE** | A56 |
| **INDEX** | A90 |
| **VERSION DE MACHINE** | 1 |
| PELLE RÉTRO - BRAS TÉLESCOPIQUE (VERSION) | 1 |
| PELLE RÉTRO - BRAS NORMAL (VERSION) | 9 |
| PELLE RÉTRO (VERSION) | 10 |
| PELLE RÉTRO - BRAS NORMAL (VERSION) | 11 |
| PELLE RÉTRO (VERSION) | 13 |
| PELLE RÉTRO - BRAS NORMAL (VERSION) | 14 |
| VERSION DE CHASSIS | 15 |
| VERSION NORMALE | 16 |
| VERSION DE TRANSFORMATION - HOMOLOGATION | 16 |
| **VERSION DE MOTEUR** | 20 |
| MOTEUR (VERSION) | 20 |
| MOTEUR (VERSION PRINCIPALE) | 22 |
| **MOTEUR STANDARD** | 24 |
| ARBRE A CAMES (ASS) | 24 |
| CACHE-SOUPAPES (ASS) | 25 |
| VILEBREQUIN (ASS) | 27 |
| BLOC-CYLINDRES (ASS) | 29 |
| CULASSE (ASS) | 32 |
| ENTRAÎNEMENT DE VENTILATEUR (ASS) | 34 |
| VOLANT MOTEUR (ASS) | 35 |
| CARTER DE VOLANT (ASS) | 36 |
| CARTER AV (ASS) | 37 |
| OEILLETONS DE LEVAGE MOTEUR (ASS) | 39 |
| MONTAGE DE MOTEUR (ASS) | 40 |
| MONTAGE DE MOTEUR ET BOÎTE (ASS) | 41 |
| HUILE MOTEUR - CARTER (ASS) | 43 |
| PISTON ET BIELLE (ASS) | 45 |
| BOUCHON DE MOTEUR (ASS) | 47 |
| VILEBREQUIN - POULIE (ASS) | 49 |
| CULBUTERIE (ASS) | 50 |
| **CIRCUIT DE GRAISSAGE** | 51 |
| BOUCHON DE REMPLISSAGE D'HUILE MOTEUR (ASS) | 51 |
| POMPE A HUILE MOTEUR (ASS) | 52 |
| **CIRCUIT DE REFROIDISSEMENT** | 53 |
| RACCORD D'EAU (ASS) | 53 |
| SUPPORT DE FILTRE ET REFROIDISSEUR D'HUILE MOTEUR | 54 |
| VENTILATEUR ASPIRANT (ASS) | 56 |
| RACCORD-RÉCHAUFFEUR ET CLIMATISEUR (ASS) | 58 |
| CANALISATIONS DE REFROIDIS. DE TRANSMISSION | 59 |
| POMPE A EAU (ASS) | 63 |
| RADIATEUR ET VENTILATEUR (ASS) | 65 |
| RADIATEUR ET REFROIDISSEUR D'HUILE HYDRAULIQUE (ASS) | 67 |
| **CIRCUIT D'ADMISSION D'AIR ET D'ÉCHAPPEMENT** | 73 |
| FILTRE A AIR (ASS) | 73 |
| COUVERCLE DE COLLECTEUR D'ADMISSION (ASS) | 76 |
| RALLONGE D'ÉCHAPPEMENT (ASS) | 77 |
| INDICATEUR DE COLMATAGE DE FILTRE À AIR (ASS) | 78 |
| CANALISATIONS D'AIR (ASS) | 80 |
| SILENCIEUX (ASS) | 83 |
| TURBOCOMPRESSEUR (ASS) | 84 |
| **CIRCUIT DE CARBURANT** | 86 |
| COMMANDE DE RÉGULATEUR ET D'ACCÉLÉRATEUR (ASS) | 86 |
| FILTRE A CARBURANT (ASS) | 88 |
| CANALISATIONS DE CARBURANT (ASS) | 90 |
| POMPE D'INJECTION DE CARBURANT (ASS) | 92 |
| POMPE D'AMORÇAGE DE CARBURANT (ASS) | 98 |
| SÉPARATEUR D'EAU (ASS) | 99 |
| RÉSERVOIR DE CARBURANT ET MONTAGE (ASS) | 100 |
| RÉSERVOIR DE CARBURANT (ASS) | 101 |
| **CIRCUIT ÉLECTRIQUE ET DE DÉMARRAGE** | 103 |
| ALTERNATEUR DE CHARGE (ASS) | 103 |
| BATTERIE (ASS) | 104 |
| COMMANDE DE POSITION (ASS) | 112 |
| BOUGIE DE PRÉCHAUFFAGE (ASS) | 113 |


* TRADUCTION NON DISPONIBLE AU MOMENT DE LA PUBLICATION

# TABLE DES MATIÈRES


| Désignation | Page |
|---|---|
| EAU DES CHEMISES - RECHAUFFEUR (ASS) | 114 |
| MONTAGE-SÉCURITÉ (ASS) | 115 |
| LAMPE - PHARE (ASS) | 117 |
| LAMPE - PHARE ET CLIGNOTANT | 120 |
| LAMPE-PLAQUE D'IMMATRICULATION (ASS) | 128 |
| FEUX ARRIÈRE ET FEUX D'ARRÊT | 129 |
| LAMPE - GYROPHARE (ASS) | 131 |
| ÉCLAIRAGE - PROJECTEURS (ASS) | 133 |
| ÉCLAIRAGE - FEUX DE ROUTE (ASS) | 144 |
| ÉCLAIRAGE - AVERTISSEUR (ASS) | 161 |
| ÉCLAIRAGE - GYROPHARE (ASS) | 163 |
| PRISE (ASS) | 165 |
| DÉMARREUR ÉLECTRIQUE (ASS) | 166 |
| MANOCONTACT | 169 |
| BOUTON DE TEMPÉRATURE | 170 |
| AVERTISSEUR DE RECUL (ASS) | 171 |
| CABLAGE - CLIMATISEUR (ASS) | 173 |
| CABLAGE DE CHANGEMENT DE VITESSES AUTOMATIQUE (ASS) | 176 |
| CABLAGE DE CABINE (ASS) | 178 |
| CABLAGE DE CONSOLE (ASS) | 183 |
| CABLAGE DE MOTEUR (ASS) | 189 |
| CABLAGE DU CHAUFFAGE DE CABINE (ASS) | 193 |
| CÂBLAGE DE PRISE DE FORCE ET LIMITEUR (ASS) | 195 |
| CABLAGE - PLATE-FORME (ASS) | 196 |
| CABLAGE DE PRISE DE FORCE | 202 |
| CABLAGE AR (ASS) | 203 |
| CÂBLAGE DE COMMANDE DE TRANSLATION (ASS) | 206 |
| CABLAGE - CAPTEUR (ASS) | 214 |
| CABLAGE D'AVERTISSEUR DE STABILISATEUR (ASS) | 215 |
| CABLAGE DE DIRECTION (ASS) | 217 |
| **TRANSMISSION** | 218 |
| ESSIEU MOTEUR ET DIRECTEUR (ASS) | 218 |
| ESSIEU AR (ASS) | 220 |
| COMMANDE DE DIFFÉRENTIEL - VERROUILLAGE (ASS) | 225 |
| COMMANDE DE BOITE DE VITESSES (ASS) | 226 |
| COURONNE ET DIFFERENTIEL (ASS) | 227 |
| DIFFERENTIEL (ASS) | 229 |
| VERSION D'ENTRAÎNEMENT DE CHARGEUSE-PELLETEUSE | 230 |
| ENTRAÎNEMENT D'ACCOUPLEMENT FLEXIBLE (ASS) | 231 |
| GOULOTTE DE REMPLISSAGE D'HUILE DE TRANSMISSION | 232 |
| CARTER ET BRIDE D'ESSIEU (ASS) | 234 |
| VERROUILLAGE - QUATRIEME VITESSE (ASS) | 236 |
| MONTAGE D'ESSIEU (ASS) | 237 |
| TRAINS PLANÉTAIRES-RÉDUCTEURS (ASS) | 238 |
| TRANSMISSION (VERSION) | 239 |
| ARBRE D'ENTRAÎNEMENT (ASS) | 241 |
| BOITE DE VITESSES ET MONTAGE (ASS) | 245 |
| BOITE MECANIQUE (VERSION) | 247 |
| BOÎTE POWER SHIFT (VERSION) | 247 |
| BOÎTE MÉCANIQUE (ASS) | 248 |
| BOÎTE POWER SHIFT (ASS) | 254 |
| CLAPET DE DECHARGE (ASS) | 260 |
| SOUPAPE - SOLÉNOÏDE (ASS) | 261 |
| PNEU - GROUPE DE VALVE | 266 |
| ROUE ET PNEU (VERSION) | 267 |
| ROUE ET PNEU (ASS) | 272 |
| **CIRCUIT DE FREINAGE** | 289 |
| FREIN DE STATIONNEMENT (ASS) | 289 |
| COMMANDE DE FREIN DE STATIONNEMENT (ASS) | 290 |
| FREIN DE MANOEUVRE - COMMANDE (ASS) | 292 |
| LEVIER DE COMMANDE MANUELLE | 295 |
| RÉSERVOIR-FREIN (ASS) | 296 |
| **CIRCUIT DE DIRECTION** | 297 |
| COMMANDE DE DIRECTION (ASS) | 297 |
| BOUTON DE DIRECTION (ASS) | 299 |
| CANALISATIONS DE DIRECTION (ASS) | 300 |
| POMPE DE REGULARISATION DE DEBIT (ASS) | 303 |
| VOLANT DE DIRECTION (ASS) | 304 |
| SOUPAPE DE PRIORITE (ASS) | 305 |
| **CHÂSSIS ET BENNE** | 306 |
| COMPARTIMENT DE BATTERIE (ASS) | 306 |
| PARE-CHOCS AV (ASS) | 311 |
| CONTREPOIDS (ASS) | 312 |
| PORTE DE BATTERIE (ASS) | 316 |
| GARDE-BOUE AV (ASS) | 317 |
| GARDE-BOUE AR (ASS) | 319 |
| TÔLE DE PLANCHER (ASS) | 320 |
| BATI - CHARGEUSE (ASS) | 322 |
| BATI - DEPORT LATERAL (ASS) | 324 |
| BÂTI D'ORIENTATION (ASS) | 326 |


* TRADUCTION NON DISPONIBLE AU MOMENT DE LA PUBLICATION

# TABLE DES MATIÈRES


| Désignation | Page |
|---|---|
| BLINDAGE D'ARBRE DE TRANSMISSION (ASS) | 331 |
| PROTECTION - ÉCLAIRAGE (ASS) | 332 |
| PROTECTEUR DES CANALISATIONS (ASS) | 334 |
| CAPOT ET PROTECTION (ASS) | 336 |
| CAPOT DU MOTEUR (ASS) | 338 |
| REVÊTEMENT D'INSONORISATION (ASS) | 341 |
| MONTAGE - IMMATRICULATION (ASS) | 342 |
| RÉFLECTEUR (ASS) | 344 |
| INSONORISATION (VERSION) | 345 |
| **CIRCUIT HYDRAULIQUE** | 346 |
| ACCUMULATEUR - COMMANDE DE TRANSLATION (ASS) | 346 |
| RACCORD DE SOUPAPE (ASS) | 347 |
| COMMANDE DE TRANSLATION (VERSION) | 348 |
| COMMANDE DE POIGNÉE (ASS) | 350 |
| COMMANDE HYDRAULIQUE MANUELLE (ASS) | 352 |
| COMMANDE HYDRAULIQUE DE PÉDALE (ASS) | 365 |
| ENSEMBLE DE TRANSFORM.-COMMANDE MANUELLE HYDR. | 369 |
| ACCOUPLEMENT (ASS) | 370 |
| CACHE-SOUPAPES ET RANGÉE DE SOUPAPES (ASS) | 371 |
| VÉRIN DE GODET RÉTRO (ASS) | 372 |
| VERIN DE FLECHE (ASS) | 376 |
| VÉRIN DU BRAS TELESCOPIQUE (ASS) | 378 |
| VÉRIN DE LEVAGE (ASS) | 381 |
| VÉRIN - GODET TOUS-TRAVAUX (ASS) | 382 |
| VERIN DE STABILISATEUR (ASS) | 384 |
| VERIN DE BRAS (ASS) | 385 |
| VÉRIN D'ORIENTATION (ASS) | 386 |
| VÉRIN D'INCLINAISON (ASS) | 388 |
| VIDANGE - HYDRAULIQUE (ASS) | 390 |
| VERSION HYDRAULIQUE | 391 |
| KIT - COMMANDE DE TRANSLATION | 397 |
| CANALISATIONS DE PELLE RÉTRO (ASS) | 398 |
| CANALISATIONS SECONDAIRES DE PELLE RÉTRO (ASS) | 402 |
| FLECHE - CANALISATIONS | 440 |
| CANALISATIONS DE VÉRIN DE GODET (ASS) | 441 |
| CANALISATIONS DE VIDANGE (ASS) | 443 |
| CANALISATIONS DU BRAS TELESCOPIQUE (ASS) | 445 |
| CANALISATIONS DE VÉRIN DE LEVAGE (ASS) | 446 |
| CANALISATIONS-VALVE DE CONTROLE DE CHARGE | 451 |
| CANALISATIONS-CHARGEUSE AUXILIAIRE (ASS) | 462 |
| CANALISATIONS - GODET TOUS-TRAVAUX (ASS) | 466 |
| CANALISATIONS A COMMANDE PILOTE (ASS) | 474 |
| CANALISATIONS DE POMPE (ASS) | 477 |
| *LINES GP-RETURN | 486 |
| CANALISATIONS DE COMMANDE DE MARCHE | 487 |
| CANALISATIONS DE VERROUILLAGE DE DEPORT LATERALE | 489 |
| CANALISATIONS DE STABILISATEUR (ASS) | 497 |
| CANALISATIONS DE BRAS (ASS) | 501 |
| CANALISATIONS D'ORIENTATION (ASS) | 509 |
| CANALISATIONS DU VÉRIN D'INCLINAISON (ASS) | 519 |
| VERROUILLAGE DE COMMANDE HYDRAULIQUE À PIED (ASS) | 523 |
| VERROUILLAGE DE COMMANDE MANUELLE HYDRAUL. (ASS) | 524 |
| MONTAGE-DISTRIBUTEUR (ASS) | 525 |
| MONTAGE DE VÉRIN (ASS) | 527 |
| MONTAGE - POMPE HYDRAULIQUE (ASS) | 528 |
| MONTAGE DE CANALISATIONS (ASS) | 529 |
| POMPE A PISTONS (ASS) | 533 |
| GROUPE DE ROTATION DE POMPE | 536 |
| ARBRE DE PRISE DE FORCE (ASS) | 537 |
| STABILISATEUR (VERSION) | 538 |
| RÉSERVOIR HYDRAULIQUE (ASS) | 539 |
| DISTRIBUTEURS ET MONTAGE (ASS) | 541 |
| DISTRIBUTEUR 4 ÉLÉMENTS (VERSION) | 542 |
| DISTRIBUTEUR 5 ÉLÉMENTS (VERSION) | 542 |
| DISTRIBUTEUR 6 ÉLÉMENTS (VERSION) | 543 |
| DISTRIBUTEUR HYDRAULIQUE AUXILIAIRE (ASS) | 544 |
| DISTRIBUTEUR DOUBLE ÉLÉMENT (ASS) | 547 |
| DISTRIBUTEUR TRIPLE ÉLÉMENT (ASS) | 549 |


* TRADUCTION NON DISPONIBLE AU MOMENT DE LA PUBLICATION

# TABLE DES MATIÈRES


| Désignation | Page |
|---|---|
| DISTRIBUTEUR 4 ÉLÉMENTS (ASS) | 551 |
| DISTRIBUTEUR 5 ÉLÉMENTS (ASS) | 553 |
| DISTRIBUTEUR 6 ÉLÉMENTS (ASS) | 556 |
| *VALVE GP-CHECK | 558 |
| DISTRIBUTEUR (ASS) | 559 |
| DISTRIBUTEUR DE CHARGE (ASS) | 579 |
| *VALVE GP-PUMP CONTROL | 581 |
| SOUPAPE - SOLÉNOÏDE (ASS) | 584 |
| **ÉQUIPEMENTS** | 586 |
| BRAS DE LEVAGE (ASS) | 586 |
| FLECHE (ASS) | 588 |
| *BOOM GP | 589 |
| SUPPORT D'EXPÉDITION (ASS) | 590 |
| CARTER DE BRAS TÉLESCOPIQUE (ENS) | 592 |
| LIAISON-EXPÉDITION (ASS) | 593 |
| TIMONERIE DE GODET RÉTRO (ASS) | 594 |
| CHARGEUSE (VERSION) | 597 |
| VERROUILLAGE DE STABILISATEUR (ASS) | 598 |
| VERROUILLAGE POUR L'EXPÉDITION (ASS) | 599 |
| MONTAGE DE BRAS (ASS) | 604 |
| SEMELLE DE STABILISATEUR | 605 |
| PELLE RÉTRO - STABILISATEUR (ASS) | 606 |
| BRAS TÉLESCOPIQUE (ASS) | 609 |
| BRAS DE PELLE RETRO (ASS) | 613 |
| **OUTILS DE TRAVAIL** | 615 |
| GODET TOUS-TRAVAUX (VERSION) | 615 |
| *BUCKET AR-MULTIPURPOSE | 620 |
| GODET NORMAL (ENS) | 621 |
| GODET RETRO (ASS) | 625 |
| GODET TOUS-TRAVAUX (ASS) | 666 |
| COUPLEUR EXPRESS (ASS) | 677 |
| LAME DE COUPE (ASS) | 683 |
| FOURCHE (VERSION) | 685 |
| FOURCHE (ASS) | 686 |
| PROTECTION DE GODET (ASS) | 687 |
| GODET - MONTAGE (ASS) | 689 |
| MONTAGE FOURCHE (ASS) | 693 |
| GODET - VERSION D'EXPÉDITION | 694 |
| ARRÊT-GODET (ASS) | 695 |
| DENT MONOBLOC (ASS) | 697 |
| **POSTE DE CONDUITE** | 698 |
| CLIMATISEUR ET MONTAGE (ASS) | 698 |
| CLIMATISEUR (ASS) | 700 |
| ACCOUDOIR (ASS) | 702 |
| CABINE (VERSION) | 703 |
| CABINE ROPS FERMÉE (VERSION) | 705 |
| CABINE (ASS) | 707 |
| TOIT (VERSION) | 711 |
| TOIT-ROPS OUVERT (ASS) | 712 |
| POCHE A DOCUMENTS (ASS) | 713 |
| COMPRESSEUR DE REFRIGERANT (ASS) | 714 |
| CONDENSATEUR ET MONTAGE (RÉFRIGÉRANT) | 716 |
| CONSOLE AV (ASS) | 717 |
| CONSOLE DE CONDUITE (ASS) | 719 |
| CONSOLE LATÉRALE (ASS) | 721 |
| COUVERCLE DE LA CONSOLE (ASS) | 727 |
| COUVERCLE-CLOISON PARE-FEU (ENS) | 728 |
| COUVERCLE (ASS) MONTANT | 730 |
| PORTIERE GAUCHE (ASS) | 731 |
| PORTIERE DROITE (ASS) | 733 |
| GAINE D'AIR (ASS) | 735 |
| TAPIS DU PLANCHER (ASS) | 739 |
| CHAUFFAGE ET MONTAGE - CABINE (ASS) | 741 |
| CHAUFFAGE DE CABINE (ASS) | 743 |
| KLAXON ÉLECTRIQUE (ASS) | 745 |
| LEVIER DE COMMANDE DE REGULATEUR (ASS) | 746 |
| CANALISATIONS DE CHAUFFAGE (ASS) | 747 |
| CANALISATIONS-RÉCHAUFFEUR ET CLIMATISEUR (ASS) | 749 |
| RÉTROVISEUR (ASS) | 751 |
| MODULE - TÉMOIN (ASS) | 753 |
| MOTEUR D'ESSUIE-GLACE (ASS) | 755 |
| MONTAGE DU TABLEAU DE BORD (ASS) | 756 |
| TABLEAU DE BORD (ASS) | 760 |
| RÉGULATEUR - PÉDALE (ASS) | 761 |
| CEINTURE DE SECURITE (ASS) | 762 |
| SIÈGE (ASS) | 763 |
| SIÈGE AVEC SUSPENSION (ASS) | 770 |
| INSONORISATION (ASS) | 776 |
| SIÈGE AVEC SUSPENSION (ASS) | 778 |
| COMPTE-TOURS ÉLECTRIQUE (ASS) | 781 |
| GARNITURE POUR CABINE (ASS) | 783 |
| RETROVISEUR - CABINE (ASS) | 784 |
| LAVE-GLACE - VITRE (ASS) | 785 |
| VITRE DE CABINE (ASS) | 787 |
| GLACE DE PORTIÈRE (ASS) | 793 |
| ESSUIE-GLACE (ASS) | 797 |
| **MATÉRIEL ET FOURNITURES D'ENTRETIEN** | 799 |
| PLAQUE SIGNALÉTIQUE (ASS) | 799 |


* TRADUCTION NON DISPONIBLE AU MOMENT DE LA PUBLICATION

# TABLE DES MATIÈRES


| Désignation | Page | Désignation | Page |
|---|---|---|---|
| MONTAGE DE CALE DE ROUE (VERSION) | 801 | | |
| VERROUILLAGE ANTI-VANDALISME (ASS) | 802 | | |
| PLAQUES SIGNALETIQUES ET AUTOCOLLANTS (ASS) | 804 | | |
| PLAQUE LATERALE RELECTRICE (ENS) | 809 | | |
| **INDEX DE NUMÉROS DE PIÈCES** | B1 | | |


* TRADUCTION NON DISPONIBLE AU MOMENT DE LA PUBLICATION

# CONTENIDO


| Nombre | Página |
|---|---|
| **INFORMACIÓN GENERAL** | A30 |
| **ALTERNATIVAS DE REPARACIÓN** | A44 |
| **ADITIVOS DE REFRIGERANTE SUPLEMENTARIOS** | A49 |
| **PIEZAS DE MANTENIMIENTO** | A62 |
| **INDICE** | A102 |
| **CONFIGURACIÓN DE MÁQUINA** | 1 |
| BRAZO EXTENDIBLE DE RETROEXCAVADOR (CONFIG) | 1 |
| BRAZO ESTÁNDAR DE RETROEXCAVADOR (CONFIG) | 9 |
| RETROEXCAVADOR (CONFIG) | 10 |
| BRAZO ESTÁNDAR DE RETROEXCAVADOR (CONFIG) | 11 |
| RETROEXCAVADOR (CONFIG) | 13 |
| BRAZO ESTÁNDAR DE RETROEXCAVADOR (CONFIG) | 14 |
| CHASIS (CONFIG) | 15 |
| CONFIGURACIÓN COMÚN | 16 |
| CONFIGURACIÓN DE TRANSFORMACIÓN PARA CERTIFICACIÓN | 16 |
| **CONFIGURACIÓN DE MOTOR** | 20 |
| CONFIGURACIÓN DE MOTORES | 20 |
| MOTOR PRIMARIO (CONFIG) | 22 |
| **MOTOR BÁSICO** | 24 |
| ÁRBOL DE LEVAS (GR) | 24 |
| TAPA DEL MECANISMO DE VÁLVULAS (GR) | 25 |
| CIGÜEÑAL (GR) | 27 |
| BLOQUE MOTOR (GR) | 29 |
| CULATA DE CILINDROS (GR) | 32 |
| IMPULSOR DE VENTILADOR (GR) | 34 |
| VOLANTE (GR) | 35 |
| VOLANTE - CAJA DE (GR) | 36 |
| CAJA DELANTERA (GR) | 37 |
| CÁNCAMOS DE LEVANTAMIENTO DEL MOTOR (GR) | 39 |
| MONTAJE DEL MOTOR (GR) | 40 |
| MONTAJE DEL MOTOR Y LA TRANSMISIÓN (GR) | 41 |
| CÁRTER - COLECTOR DEL (GR) | 43 |
| PISTÓN Y BIELA (GR) | 45 |
| TAPÓN DEL MOTOR (GR) | 47 |
| CIGÜEÑAL - POLEA DE (GR) | 49 |
| MECANISMO DE VÁLVULAS (GR) | 50 |
| **SISTEMA DE LUBRICACIÓN** | 51 |
| TUBO DE LLENADO DE ACEITE (GR) | 51 |
| BOMBA DE ACEITE DEL MOTOR (GR) | 52 |
| **SISTEMA DE ENFRIAMIENTO** | 53 |
| AGUA - CONEXIÓN DE (GR) | 53 |
| ENFRIADOR DE ACEITE DEL MOTOR Y BASE DEL FILTRO | 54 |
| SUCCIÓN - VENTILADOR DE (GR) | 56 |
| CONEXION DE CALENTADOR Y ACOND. DE AIRE (GR) | 58 |
| TUBERÍAS DEL ENFRIADOR DEL TREN DE FUERZA (GR) | 59 |
| BOMBA DE AGUA (GR) | 63 |
| RADIADOR Y VENTILADOR (GR) | 65 |
| RADIADOR Y ENFRIADOR DE ACEITE HIDRÁULICO (GR) | 67 |
| **SISTEMA DE ADMISIÓN Y ESCAPE** | 73 |
| FILTRO DE AIRE (GR) | 73 |
| TAPA DE ADMISIÓN DE AIRE (GR) | 76 |
| EXTENSIÓN DEL ESCAPE (GR) | 77 |
| INDICADOR DE CAMBIO DE FILTRO DE ACEITE (GR) | 78 |
| AIRE - TUBERÍAS DE (GR) | 80 |
| SILENCIADOR (GR) | 83 |
| TURBOCOMPRESOR (GR) | 84 |
| **SISTEMA DE COMBUSTIBLE** | 86 |
| CONTROL DEL REGULADOR Y ACELERADOR (GR) | 86 |
| FILTRO DE COMBUSTIBLE (GR) | 88 |
| TUBERÍAS DE COMBUSTIBLE (GR) | 90 |
| BOMBA DE INYECCIÓN DE COMBUSTIBLE (GR) | 92 |
| BOMBA DE CEBADO DE COMBUSTIBLE (GR) | 98 |
| SEPARADOR DE AGUA (GR) | 99 |
| TANQUE DE COMBUSTIBLE Y GRUPO DE MONTAJE | 100 |
| COMBUSTIBLE - TANQUE DE (GR) | 101 |
| **SISTEMA ELÉCTRICO Y DE ARRANQUE** | 103 |
| CARGA - ALTERNADOR DE (GR) | 103 |
| BATERÍA (GR) | 104 |
| CONTROL DE POSICION (GR) | 112 |
| BUJÍA INCANDESCENTE (GR) | 113 |
| AGUA DE LAS CAMISAS - CALENTADOR DEL (GR) | 114 |
| INSTALACION DE SEGURIDAD (GR) | 115 |
| REFLECTOR (GR) | 117 |


* NO HAY TRADUCCION DISPONIBLE EN EL MOMENTO DE LA IMPRESION

# CONTENIDO


| Nombre | Página |
|---|---|
| LÁMPARA DE LUZ DELANTERA Y DE SEÑAL (GR) | 120 |
| LAMPARA DE PLACA DE REGISTRO (GR) | 128 |
| LUCES DE PARADA Y COLA (GR) | 129 |
| LÁMPARA DE BALIZA DE ADVERTENCIA (GR) | 131 |
| LUCES DE REFLECTOR (GR) | 133 |
| LUCES DE DESPLAZAMIENTO (GR) | 144 |
| LUCES DE ADVERTENCIA (GR) | 161 |
| LUZ DE BALIZA (GR) | 163 |
| ENCHUFE DE CONECTOR (GR) | 165 |
| MOTOR DE ARRANQUE ELÉCTRICO (GR) | 166 |
| INTERRUPTOR DE PRESIÓN (GR) | 169 |
| INTERRUPTOR PARA LA TEMPERATURA (GR) | 170 |
| RETROCESO - ALARMA DE (GR) | 171 |
| CABLES DEL ACONDICIONADOR DE AIRE (GR) | 173 |
| CABLES DE CAMBIO AUTOMATICO (GR) | 176 |
| CABLES DE LA CABINA (GR) | 178 |
| CABLES DE LA CONSOLA (GR) | 183 |
| CABLES DEL MOTOR (GR) | 189 |
| CABLES DE CALEFACCIÓN (GR) | 193 |
| CABLES DEL POSICIONADOR Y DE DESCONEXIÓN (GR) | 195 |
| CABLES DE LA PLATAFORMA (GR) | 196 |
| CABLES DEL RECEPTÁCULO DE FUERZA (GR) | 202 |
| CABLES POSTERIORES (GR) | 203 |
| CABLES DE CONTROL DE AMORTIGUACIÓN (GR) | 206 |
| CABLES DE SENSOR (GR) | 214 |
| CABLES DE LA ALARMA DEL ESTABILIZADOR (GR) | 215 |
| CABLES DE LA DIRECCIÓN (GR) | 217 |
| **TREN DE FUERZA** | 218 |
| EJE DE IMPULSIÓN Y DE DIRECCIÓN (GR) | 218 |
| EJE TRASERO (GR) | 220 |
| CONTROL DE TRABA DEL DIFERENCIAL (GR) | 225 |
| CONTROL DE LA TRANSMISIÓN (GR) | 226 |
| DIFERENCIAL Y CORONA (GR) | 227 |
| DIFERENCIAL (GR) | 229 |
| CONFIG. DEL MANDO, CARGADOR RETROEXCAVADORA | 230 |
| ACOPLAMIENTO FLEXIBLE - MANDO DE (GR) | 231 |
| TUBO DE LLENADO DE ACEITE DE LA TRANSMISIÓN (GR) | 232 |
| GRUPO DE PESTAÑA Y RESINTO, EJE | 234 |
| TRABA DE CUARTA VELOCIDAD (GR) | 236 |
| EJE - GRUPO DE MONTAJE | 237 |
| GRUPO PLANETARIO, MANDO FINAL | 238 |
| TREN DE FUERZA (CONFIG) | 239 |
| EJE DE MANDO (GR) | 241 |
| MONTAJE Y TRANSMISIÓN(GR) | 245 |
| TRANSMISION DIRECTA (CONFIG) | 247 |
| SERVOTRANSMISIÓN (CONFIG) | 247 |
| TRANSMISIÓN DIRECTA (GR) | 248 |
| SERVOTRANSMISIÓN (GR) | 254 |
| VÁLVULA DE ALIVIO (GR) | 260 |
| VÁLVULA DE SOLENOIDE (GR) | 261 |
| VÁLVULA DEL NEUMÁTICO (GR) | 266 |
| RUEDA Y LLANTA (CONFIG) | 267 |
| RUEDA Y NEUMÁTICO (GR) | 272 |
| **SISTEMA DE FRENOS** | 289 |
| FRENO DE ESTACIONAMIENTO (GR) | 289 |
| CONTROL DEL FRENO DE ESTACIONAMIENTO | 290 |
| FRENO DE SERVICIO - CONTROL (GR) | 292 |
| CONTROL MANUAL DE PALANCA (GR) | 295 |
| TANQUE DEL SISTEMA DE FRENOS (GR) | 296 |
| **SISTEMA DE DIRECCIÓN** | 297 |
| CONTROL DE DIRECCIÓN (GR) | 297 |
| GRUPO PERILLA, DIRECCIÓN | 299 |
| TUBERÍAS DE DIRECCIÓN (GR) | 300 |
| DOSIFICACIÓN - BOMBA DE (GR) | 303 |
| VOLANTE DE DIRECCIÓN (GR) | 304 |
| PRIORIDAD - VÁLVULA DE (GR) | 305 |
| **BASTIDOR Y CAJA** | 306 |
| CAJA DE BATERÍA | 306 |
| PARAGOLPES DELANTERO | 311 |
| CONTRAPESO (GR) | 312 |
| TAPA DE LA BATERÍA (GR) | 316 |
| GUARDABARROS DELANTERO (GR) | 317 |
| GUARDABARROS TRASERO (GR) | 319 |
| PLANCHA DEL PISO (GR) | 320 |
| BASTIDOR DEL CARGADOR (GR) | 322 |
| BASTIDOR DE DESPLAZAMIENTO LATERAL (GR) | 324 |
| BASTIDOR DE ROTACIÓN (GR) | 326 |
| PROTECTOR DEL EJE IMPULSOR (GR) | 331 |


* NO HAY TRADUCCION DISPONIBLE EN EL MOMENTO DE LA IMPRESION

# CONTENIDO


| Nombre | Página |
|---|---|
| PROTECTOR DE LAS LUCES (GR) | 332 |
| PROTECTOR DE LAS TUBERÍAS (GR) | 334 |
| CAPO Y PROTECTOR (GR) | 336 |
| CAPÓ DEL MOTOR (GR) | 338 |
| REVESTIMIENTO DE INSONORIZACION (GR) | 341 |
| MONTAJE-REGISTRO (GR) | 342 |
| REFLECTOR (GR) | 344 |
| INSONORIZADOR (CONFIG) | 345 |
| **SISTEMA HIDRÁULICO** | 346 |
| ACUMULADOR DE CONTROL DE AMORTIGUACION (GR) | 346 |
| CONECTOR DE VALVULA (GR) | 347 |
| CONTROL DE AMORTIGUACIÓN (CONFIG) | 348 |
| CONTROL DE MANIJA (GR) | 350 |
| CONTROL HIDRÁULICO MANUAL (GR) | 352 |
| GRUPO DE CONTROL DE PEDAL HIDRÁULICO | 365 |
| CONVERSION DE CONTROL DE MANO HIDRAULICO (GR) | 369 |
| ACOPLAMIENTO (GR) | 370 |
| TAPA Y GRUPO DE VALVULAS (GR) | 371 |
| CILINDRO DE CUCHARÓN RETROEXCAVADOR (GR) | 372 |
| CILINDRO DE LA PLUMA (GR) | 376 |
| CILINDRO DEL BRAZO EXTENSIBLE (GR) | 378 |
| CILINDRO DE LEVANTAMIENTO (GR) | 381 |
| CILINDRO DE CUCHARÓN DE USO MÚLTIPLE (GR) | 382 |
| CILINDRO ESTABILIZADOR (GR) | 384 |
| CILINDRO DEL BRAZO (GR) | 385 |
| CILINDRO DE ROTACIÓN (GR) | 386 |
| INCLINACIÓN HORIZONTAL - CILINDRO DE (GR) | 388 |
| DRENAJE HIDRÁULICO (GR) | 390 |
| HIDRÁULICA (CONFIG) | 391 |
| JUEGO DE CONTROL DE OPERACION | 397 |
| TUBERIAS DE LA RETROEXCAVADORA (GR) | 398 |
| TUBERIAS AUXILIARES-RETROEXCAVADORA (GR) | 402 |
| TUBERÍAS DE LA PLUMA (GR) | 440 |
| TUBERÍAS DEL CILINDRO DEL CUCHARÓN (GR) | 441 |
| TUBERÍAS DE DRENAJE (GR) | 443 |
| TUBERÍAS DE LA PALANCA EXTENDIBLE (GR) | 445 |
| CILINDRO DE LEVANTAMIENTO - TUBERÍAS DEL (GR) | 446 |
| TUBERIAS DE VALVULA DE CONTROL DE CARGA (GR) | 451 |
| TUBERIAS DE AUXILIAR DE CARGADOR (GR) | 462 |
| TUBERÍAS DEL CUCHARÓN DE USO MÚLTIPLE | 466 |
| TUBERÍAS CON SERVOMANDO (GR) | 474 |
| BOMBA - TUBERÍAS DE (GR) | 477 |
| *LINES GP-RETURN | 486 |
| TUBERIAS DE CONTROL DE LA SUSPENSIÓN (GR) | 487 |
| TUBERÍAS DE TRABA DEL DESPLAZAMIENTO LATERAL (GR) | 489 |
| TUBERÍAS DEL ESTABILIZADOR (GR) | 497 |
| TUBERÍAS DEL BRAZO (GR) | 501 |
| TUBERÍAS DE GIRO (GR) | 509 |
| TUBERÍAS DEL CILINDRO DE INCLINACIÓN (GR) | 519 |
| TRABA DEL CONTROL HIDRÁULICO DEL PEDAL | 523 |
| TRABA DE CONTROL HIDRÁULICO MANUAL (GR) | 524 |
| MONTAJE DE BANCADA DE VALVULA (GR) | 525 |
| MONTAJE DE CILINDRO (GR) | 527 |
| MONTAJE DE LA BOMBA HIDRÁULICA (GR) | 528 |
| MONTAJE DE TUBERIAS (GR) | 529 |
| BOMBA DE PISTONES (GR) | 533 |
| GRUPO GIRATORIO DE BOMBA | 536 |
| EJE DE TOMA DE FUERZA (GR) | 537 |
| ESTABILIZADOR (CONFIG) | 538 |
| TANQUE HIDRÁULICO (GR) | 539 |
| MONTAJE Y VALVULA DEL BANCO(GR) | 541 |
| GRUPO DE CUATRO VALVULAS (CONFIG) | 542 |
| GRUPO DE 5 VALVULAS (CONFIG) | 542 |
| GRUPO DE 6 VALVULAS (CONFIG) | 543 |
| VÁLVULA AUXILIAR (GR) | 544 |
| VÁLVULAS HIDRÁULICAS - GRUPO DE 2 | 547 |
| GRUPO DE 3 VÁLVULAS HIDRÁULICAS | 549 |
| GRUPO DE 4 VÁLVULAS HIDRÁULICAS | 551 |
| BANCADA 5 (GR) | 553 |
| VÁLVULAS HIDRÁULICAS - GRUPO DE 6 | 556 |
| *VALVE GP-CHECK | 558 |


* NO HAY TRADUCCION DISPONIBLE EN EL MOMENTO DE LA IMPRESION

# CONTENIDO


| Nombre | Página |
|---|---|
| VÁLVULA DE CONTROL (GR) | 559 |
| VÁLVULA DE CONTROL DE CARGA (GR) | 579 |
| *VALVE GP-PUMP CONTROL | 581 |
| VÁLVULA DE SOLENOIDE (GR) | 584 |
| **IMPLEMENTOS** | 586 |
| GRUPO DE BRAZO DE LEVANTAMIENTO | 586 |
| PLUMA (GR) | 588 |
| *BOOM GP | 589 |
| SOPORTE PARA EL TRANSPORTE | 590 |
| CAJA DE BRAZO EXTENSIBLE (CONJ) | 592 |
| TIRANTE DE EMBARQUE (GR) | 593 |
| VARILLAJE DEL CUCHARÓN RETROEXCAVADOR (GR) | 594 |
| CARGADOR (CONFIG) | 597 |
| TRABA DEL ESTABILIZADOR | 598 |
| TRABA DE TRANSPORTE DE LA MÁQUINA (GR) | 599 |
| MONTAJE DEL BRAZO (GR) | 604 |
| ZAPATA DE ESTABILIZADOR (GR) | 605 |
| RETROEXCAVADOR - ESTABILIZADOR DEL (GR) | 606 |
| BRAZO EXTENSIBLE (GR) | 609 |
| BRAZO DE RETROEXCAVADOR (GR) | 613 |
| **HERRAMIENTAS** | 615 |
| CUCHARÓN DE USO MÚLTIPLE (CONFIG) | 615 |
| *BUCKET AR-MULTIPURPOSE | 620 |
| CUCHARÓN DE USO GENERAL (CONJ) | 621 |
| CUCHARÓN RETROEXCAVADOR (GR) | 625 |
| CUCHARÓN DE USO MÚLTIPLE (GR) | 666 |
| ACOPLADOR RÁPIDO (GR) | 677 |
| CUCHILLA (GR) | 683 |
| HORQUILLA (CONFIG) | 685 |
| HORQUILLA (GR) | 686 |
| GRUPO DE PROTECTOR DEL CUCHARON | 687 |
| MONTAJE DEL CUCHARÓN (GR) | 689 |
| HORQUILLA - GRUPO DE MONTAJE DE LA | 693 |
| CUCHARÓN DE EMBARQUE (CONFIG) | 694 |
| TOPE DE CUCHARON (GR) | 695 |
| DIENTE DE UNA PIEZA (UNI-TOOTH) (GR) | 697 |
| **PUESTO DEL OPERADOR** | 698 |
| ACONDICIONADOR DE AIRE Y MONTAJE (GR) | 698 |
| ACONDICIONADOR DE AIRE (GR) | 700 |
| POSABRAZOS (GR) | 702 |
| CABINA (CONFIG) | 703 |
| SISTEMA ROPS DE CABINA CERRADA (CONFIG) | 705 |
| CABINA (GR) | 707 |
| TECHO (CONFIG) | 711 |
| TECHO ROPS ABIERTO (GR) | 712 |
| COMPARTIMIENTO DE LITERATURA DE SERVICIO (GR) | 713 |
| COMPRESOR DE REFRIGERANTE (GR) | 714 |
| CONDENSADOR DEL REFRIGERANTE Y MONTAJE (GR) | 716 |
| CONSOLA DELANTERA (GR) | 717 |
| CONSOLA DEL OPERADOR (GR) | 719 |
| CONSOLA LATERAL (GR) | 721 |
| TAPA DE LA CONSOLA (GR) | 727 |
| TAPA DE MAMPARA PARAFUEGO (GR) | 728 |
| TAPA DE POSTE (GR) | 730 |
| PUERTA IZQUIERDA (GR) | 731 |
| PUERTA DERECHA (GR) | 733 |
| CONDUCTO DE AIRE (GR) | 735 |
| ALFOMBRILLA DEL PISO (GR) | 739 |
| CALEFACCIÓN Y MONTAJE DE LA CABINA (GR) | 741 |
| CALEFACCIÓN DE LA CABINA (GR) | 743 |
| BOCINA ELÉCTRICA (GR) | 745 |
| PALANCA DE CONTROL DEL REGULADOR (GR) | 746 |
| TUBERÍAS DE LA CALEFACCIÓN (GR) | 747 |
| TUBERIAS DE CALENTEDOR Y ACONDICIONADOR DE AIRE (GR) | 749 |
| RETROVISOR (GR) | 751 |
| MÓDULO INDICADOR DE ADVERTENCIA (GR) | 753 |
| MOTOR-LIMPIAPARABRISAS (GR) | 755 |
| MONTAJE DEL TABLERO DE INSTRUMENTOS (GR) | 756 |
| TABLERO DE INSTRUMENTOS (GR) | 760 |
| REGULADOR - PEDAL DEL (GR) | 761 |
| CINTURÓN DE SEGURIDAD (GR) | 762 |
| ASIENTO (GR) | 763 |
| SUSPENSIÓN - ASIENTO CON (GR) | 770 |
| INSONORIZADOR (GR) | 776 |
| ASIENTO CON SUSPENSIÓN (GR) | 778 |
| TACÓMETRO ELÉCTRICO (GR) | 781 |
| GUARNICIONES DE LA CABINA (GR) | 783 |


* NO HAY TRADUCCION DISPONIBLE EN EL MOMENTO DE LA IMPRESION

# CONTENIDO


| Nombre | Página |
|---|---|
| VISERA (GR) | 784 |
| LAVAPARABRISAS DE LA VENTANA (GR) | 785 |
| VENTANA DE LA CABINA (GR) | 787 |
| VENTANA DE LA PUERTA (GR) | 793 |
| LIMPIAPARABRISAS DE LA VENTANA (GR) | 797 |
| **EQUIPOS Y SUMINISTRO DE SERVICIOS** | 799 |
| ETIQUETA DE ADVERTENCIA (GR) | 799 |
| INSTALACIÓN DE LA TRABA DE LA RUEDA | 801 |
| TRABA CONTRA EL VANDALISMO (GR) | 802 |
| CALCOMANÍAS Y PLACAS DE IDENTIFICACIÓN (GR) | 804 |
| PLACA LATERAL REFLECTORA | 809 |
| **INDICE DE NUMEROS DE PIEZA** | B1 |


* NO HAY TRADUCCION DISPONIBLE EN EL MOMENTO DE LA IMPRESION

# ÍNDICE


| Designação | Página |
|---|---|
| **INFORMAÇÃO GERAL** | A34 |
| **ALTERNATIVAS DE REPARO** | A45 |
| **ADITIVOS SUPLEMENTARES DO LÍQUIDO ARREFECEDOR** | A50 |
| **PEÇAS DE MANUTENÇÃO** | A68 |
| **ÍNDICE** | A115 |
| **ARRANJO DA MÁQUINA** | 1 |
| RETROESCAVADEIRA - BRAÇO ESTENDÍVEL | 1 |
| RETROESCAVADEIRA - BRAÇO PADRÃO | 9 |
| RETROESCAVADORA | 10 |
| RETROESCAVADEIRA - BRAÇO PADRÃO | 11 |
| RETROESCAVADORA | 13 |
| RETROESCAVADEIRA - BRAÇO PADRÃO | 14 |
| CHASSI | 15 |
| ARRANJO BÁSICO | 16 |
| GR. DE CONVERSÃO - CERTIFICADO | 16 |
| **ARRANJO DO MOTOR** | 20 |
| MOTOR | 20 |
| MOTOR PRIMÁRIO | 22 |
| **MOTOR BÁSICO** | 24 |
| EIXO-COMANDO DE VÁLVULA | 24 |
| TAMPA - MECANISMO DAS VÁLVULAS | 25 |
| VIRABREQUIM | 27 |
| BLOCO DO MOTOR | 29 |
| CABEÇOTE DO MOTOR | 32 |
| COMANDO DO VENTILADOR | 34 |
| VOLANTE DO MOTOR | 35 |
| CAIXA DO VOLANTE DO MOTOR | 36 |
| CAIXA DIANTEIRA | 37 |
| LEVANTAMENTO DO MOTOR | 39 |
| MONTAGEM - MOTOR | 40 |
| MONTAGEM - MOTOR E TRANSMISSÃO | 41 |
| CÁRTER DO ÓLEO DO MOTOR | 43 |
| PISTÃO E BIELA | 45 |
| BUJÃO DO MOTOR | 47 |
| POLIA DO VIRABREQUIM | 49 |
| MECANISMO DAS VÁLVULAS | 50 |
| **SISTEMA DE LUBRIFICAÇÃO** | 51 |
| BOCAL DE ENCHIMENTO DE ÓLEO DO MOTOR | 51 |
| BOMBA DE ÓLEO - MOTOR | 52 |
| **SISTEMA DE ARREFECIMENTO** | 53 |
| CONEXÃO - TUBO D'ÁGUA | 53 |
| ARREFECEDOR DE ÓLEO DO MOTOR E BASE DO FILTRO | 54 |
| VENTILADOR DE SUCÇÃO | 56 |
| CONEXÃO-AQUECEDOR & AR CONDICIONADO | 58 |
| TUBOS - ARREFECEDOR DO TREM DE FORÇA | 59 |
| BOMBA DE ÁGUA | 63 |
| RADIADOR E VENTILADOR | 65 |
| RADIADOR E ARREFECEDOR DO ÓLEO HIDRÁULICO | 67 |
| **SISTEMA DE ADMISSÃO E ESCAPE DE AR** | 73 |
| PURIFICADOR DE AR | 73 |
| TAMPA - ADMISSÃO DE AR | 76 |
| EXTENSÃO DO TUBO DE ESCAPE | 77 |
| INDICADOR - TROCA DO FILTRO DE AR | 78 |
| TUBOS - AR | 80 |
| SILENCIADOR | 83 |
| TURBOALIMENTADOR | 84 |
| **SISTEMA DO COMBUSTÍVEL** | 86 |
| CONTROLE DO GOVERNADOR E ACELERADOR | 86 |
| FILTRO - COMBUSTÍVEL | 88 |
| TUBOS - COMBUSTÍVEL | 90 |
| BOMBA DE INJEÇÃO DO COMBUSTÍVEL | 92 |
| BOMBA DE ESCORVA DO COMBUSTÍVEL | 98 |
| SEPARADOR DE ÁGUA | 99 |
| TANQUE DE COMBUSTÍVEL E MONTAGEM | 100 |
| TANQUE DE COMBUSTÍVEL | 101 |
| **SISTEMA ELÉTRICO DE PARTIDA** | 103 |
| ALTERNADOR DE CORRENTE | 103 |
| BATERIA | 104 |
| CONTROLE - POSIÇÃO | 112 |
| VELA DE AQUECIMENTO; VELA INCANDESCENTE | 113 |
| AQUECEDOR DA ÁGUA DO MOTOR | 114 |
| INSTALAÇÃO-SEGURANÇA | 115 |
| LÂMPADA - FAROL | 117 |


* TRADUÇÃO NÃO DISPONÍVEL NO MOMENTO DA IMPRESSÃO

# ÍNDICE


| Designação | Página |
|---|---|
| LÂMPADA DIANTEIRA E DE SINAL | 120 |
| LAMPADA-PLACA DE REGISTRO | 128 |
| LUZ TRASEIRA E DE FREIO | 129 |
| LUZ GIRATÓRIA DE ALARME | 131 |
| SISTEMA DE ILUMINAÇÃO - FARÓIS | 133 |
| ILUMINAÇÃO - RODOVIÁRIA | 144 |
| SISTEMA DE ILUMINAÇÃO - ADVERTÊNCIA | 161 |
| SIST. DE ILUMINAÇÃO - PISCA-PISCA GIRATÓRIO DE ADVERTÊNCIA | 163 |
| BUJÃO - CONECTOR | 165 |
| MOTOR ELÉTRICO DE PARTIDA | 166 |
| INTERRUPTOR - PRESSÃO | 169 |
| INTERRUPTOR - TEMPERATURA | 170 |
| ALARME DE MARCHA À RÉ | 171 |
| CABOS/FIOS ELÉTRICOS - AR CONDICIONADO | 173 |
| CABOS/FIOS ELÉTRICOS - CONTROLE ELET. DAS MARCHAS | 176 |
| CABOS/FIOS ELÉTRICOS - CABINE | 178 |
| CABOS/FIOS ELÉTRICOS DO CONSOLE | 183 |
| CABOS/FIOS ELÉTRICOS - MOTOR | 189 |
| CABOS/FIOS ELÉTRICOS - AQUECEDOR | 193 |
| CABOS/FIOS ELÉTRICOS - POSICIONADOR E DESENGATE AUTOMÁTICO | 195 |
| CABOS/FIOS ELÉTRICOS - PLATAFORMA | 196 |
| CABOS/FIOS ELÉTRICOS - TOMADA DE FORÇA | 202 |
| CABOS/FIOS ELÉTRICOS - TRASEIROS | 203 |
| CABOS/FIOS ELÉTRICOS - ABSORÇÃO DE IMPACTOS | 206 |
| CABOS/FIOS ELÉTRICOS - SENSOR | 214 |
| CABOS/FIOS ELÉTRICOS - ALARME DO ESTABILIZADOR | 215 |
| CABOS/FIOS ELÉTRICOS - DIREÇÃO | 217 |
| **TREM DE FORÇA** | 218 |
| EIXO DE PROPULSÃO E DIREÇÃO | 218 |
| SEMI-EIXO TRASEIRO | 220 |
| CONTROLE DA TRAVA DO DIFERENCIAL | 225 |
| CONTROLE DA TRANSMISSÃO | 226 |
| DIFERENCIAL E COROA | 227 |
| DIFERENCIAL | 229 |
| COMANDO - RETROESCAVADEIRA | 230 |
| COMANDO - ACOPLAMENTO FLEXÍVEL | 231 |
| BOCAL DE ENCHIMENTO DE ÓLEO DO TREM DE FORÇA | 232 |
| ALOJAMENTO E FLANGE - EIXO | 234 |
| TRAVA - QUARTA MARCHA | 236 |
| MONTAGEM DO EIXO | 237 |
| GR. PLANETÁRIO - COMANDO FINAL | 238 |
| TREM DE FORÇA | 239 |
| EIXO DE TRANSMISSÃO | 241 |
| TRANSMISSÃO E MONTAGEM | 245 |
| TRANSMISSÃO DIRETA | 247 |
| SERVO-TRANSMISSÃO | 247 |
| TRANSMISSÃO DIRETA | 248 |
| SERVOTRANSMISSÃO | 254 |
| VÁLVULA DE ALÍVIO | 260 |
| VÁLVULA SOLENÓIDE | 261 |
| VÁLVULA DE PNEU | 266 |
| RODA E PNEU | 267 |
| **SISTEMA DE FREIOS** | 289 |
| FREIO DE ESTACIONAMENTO | 289 |
| CONTROLE DO FREIO DE ESTACIONAMENTO | 290 |
| CONTROLE DO FREIO DE SERVIÇO | 292 |
| ALAVANCA DE CONTROLE MANUAL | 295 |
| TANQUE DO FREIO | 296 |
| **SISTEMA DE DIREÇÃO** | 297 |
| CONTROLE DE DIREÇÃO | 297 |
| BOTÃO - DIREÇÃO | 299 |
| TUBOS - DIREÇÃO | 300 |
| BOMBA REGULADORA | 303 |
| VOLANTE | 304 |
| VÁLVULA DE PRIORIDADE | 305 |
| **CHASSI E CARCAÇA** | 306 |
| CAIXA - BATERIA | 306 |
| PÁRA-CHOQUE DIANTEIRO | 311 |
| CONTRAPESO | 312 |
| TAMPA - ACESSO À BATERIA | 316 |
| PÁRA-LAMA DIANTEIRO | 317 |
| PÁRA-LAMA TRASEIRO | 319 |
| CHAPA DO PISO | 320 |
| CHASSI DIANTEIRO | 322 |
| ARMAÇÃO DESLIZANTE | 324 |
| ARMAÇÃO OSCILANTE | 326 |
| PROTETOR - EIXO DE TRANSMISSÃO | 331 |
| PROTETOR - ILUMINAÇÃO | 332 |
| PROTETOR - TUBOS | 334 |
| CAPÔ E PROTETOR | 336 |
| CAPÔ DO MOTOR | 338 |
| REVESTIMENTO PARA REDUÇÃO DE BARULHO | 341 |
| MONTAGEM DA PLACA DE REGISTRO | 342 |


* TRADUÇÃO NÃO DISPONÍVEL NO MOMENTO DA IMPRESSÃO

# ÍNDICE


| Designação | Página |
|---|---|
| REFLETOR | 344 |
| RUÍDO - ARRANJO PARA SUPRESSÃO | 345 |
| **SISTEMA HIDRÁULICO** | 346 |
| ACUMULADOR DO SISTEMA DE ABSORÇÃO DE IMPACTOS | 346 |
| VÁLVULA DO CONECTOR | 347 |
| SISTEMA DE ABSORÇÃO DE IMPACTOS | 348 |
| CONTROLE-CABO | 350 |
| CONTROLE HIDRÁULICO MANUAL | 352 |
| CONTROLE - PEDAL HIDRÁULICO | 365 |
| CONVERSÃO-CONTROLE MANUAL HIDRÁULICO | 369 |
| ACOPLAMENTO | 370 |
| TAMPA & VÁLVULA-BANCO | 371 |
| CILINDRO DA CAÇAMBA RETROESCAVADEIRA | 372 |
| CILINDRO DA LANÇA | 376 |
| CILINDRO DO BRAÇO ESTENDÍVEL | 378 |
| CILINDRO DE LEVANTAMENTO | 381 |
| CILINDRO - CAÇAMBA DE MÚLTIPLAS APLICAÇÕES | 382 |
| CILINDRO DO ESTABILIZADOR | 384 |
| CILINDRO DO BRAÇO | 385 |
| CILINDRO DE GIRO | 386 |
| CILINDRO DE INCLINAÇÃO | 388 |
| DRENO DO ÓLEO HIDRÁULICO | 390 |
| COMANDO HIDRÁULICO | 391 |
| JOGO - SISTEMA DE ABSORÇÃO DE IMPACTOS | 397 |
| TUBOS - RETROESCAVADEIRA | 398 |
| TUBOS AUXILIARES - RETROESCAVADEIRA | 402 |
| TUBOS - LANÇA | 440 |
| TUBOS - CILINDRO DA CAÇAMBA | 441 |
| TUBOS - DRENAGEM | 443 |
| TUBOS - BRAÇO COM EXTENSÃO | 445 |
| TUBOS - CILINDRO DE LEVANTAMENTO | 446 |
| TUBOS - VÁLVULA DE CONTROLE DE CARGA | 451 |
| TUBOS AUXILIARES | 462 |
| TUBOS - CAÇAMBA DE MÚLTIPLAS APLICAÇÕES | 466 |
| TUBOS - CIRCUITO PILOTO | 474 |
| TUBOS - BOMBA | 477 |
| *LINES GP-RETURN | 486 |
| TUBOS - ABSORÇÃO DE IMPACTOS | 487 |
| TUBOS - TRAVAMENTO DE DESLOCAMENTO LATERAL | 489 |
| TUBOS - ESTABILIZADOR | 497 |
| TUBOS - BRAÇO | 501 |
| TUBOS - GIRO | 509 |
| TUBOS - CILINDRO DE INCLINAÇÃO | 519 |
| TRAVA - PEDAL DE CONTROLE HIDRÁULICO | 523 |
| TRAVA - CONTROLE MANUAL HIDRÁULICO | 524 |
| MONTAGEM - BANCO DE VÁLVULAS | 525 |
| MONTAGEM - CILINDRO | 527 |
| MONTAGEM - BOMBA HIDRÁULICA | 528 |
| MONTAGEM - TUBOS | 529 |
| BOMBA DE PISTÃO | 533 |
| GRUPO ROTATIVO DA BOMBA | 536 |
| EIXO DA TOMADA DE FORÇA | 537 |
| ESTABILIZADOR | 538 |
| TANQUE HIDRÁULICO | 539 |
| VÁLVULA DE CONTROLE E MONTAGEM | 541 |
| CONJUNTO DE 4 VÁLVULAS | 542 |
| GRUPO DE VÁLVULAS - 5 | 542 |
| GRUPO DE VÁLVULAS - SEIS | 543 |
| VÁLVULA AUXILIAR | 544 |
| GRUPO DE VÁLVULAS DE CONTROLE - DUPLO | 547 |
| GRUPO DE VÁLVULAS DE CONTROLE - TRIPLO | 549 |
| GRUPO DE VÁLVULAS DE CONTROLE - QUÁDRUPLO | 551 |
| GRUPO DE VÁLVULAS DE CONTROLE - CINCO | 553 |
| GRUPO DE VÁLVULAS DE CONTROLE - SEIS | 556 |
| *VALVE GP-CHECK | 558 |
| VÁLVULA DE CONTROLE | 559 |
| VÁLVULA - CONTROLE DE CARGA | 579 |
| *VALVE GP-PUMP CONTROL | 581 |
| VÁLVULA SOLENÓIDE | 584 |
| **ACESSÓRIOS** | 586 |
| BRAÇO DE LEVANTAMENTO | 586 |
| LANÇA | 588 |
| *BOOM GP | 589 |
| SUPORTE PARA TRANSPORTE | 590 |
| ALOJAMENTO DO BRAÇO EXTENSÍVEL | 592 |
| ELO - EMBARQUE | 593 |
| ARTICULAÇÃO DA CAÇAMBA DA RETROESCAVADEIRA | 594 |
| CAÇAMBA DIANTEIRA | 597 |
| TRAVA DA PERNA DO ESTABILIZADOR | 598 |
| TRAVA - TRANSPORTE | 599 |
| MONTAGEM - BRAÇO | 604 |


* TRADUÇÃO NÃO DISPONÍVEL NO MOMENTO DA IMPRESSÃO

# ÍNDICE


| Designação | Página |
|---|---|
| CALÇO DO ESTABILIZADOR | 605 |
| ESTABILIZADOR - RETROESCAVADEIRA | 606 |
| BRAÇO ESTENDÍVEL | 609 |
| BRAÇO - CAÇAMBA RETRO-ESCAVADORA | 613 |
| **FERRAMENTAS DE TRABALHO** | 615 |
| CAÇAMBA DE MÚLTIPLAS APLICAÇÕES | 615 |
| *BUCKET AR-MULTIPURPOSE | 620 |
| CAÇAMBA PARA APLICAÇÃO GERAL | 621 |
| CAÇAMBA RETROESCAVADORA | 625 |
| CAÇAMBA DE MÚLTIPLAS APLICAÇÕES | 666 |
| ACOPLADOR RÁPIDO | 677 |
| BORDA CORTANTE | 683 |
| GARFO | 685 |
| PROTETOR - CAÇAMBA | 687 |
| MONTAGEM - CAÇAMBA | 689 |
| MONTAGEM - GARFO | 693 |
| AR. DE EMBARQUE DA CAÇAMBA | 694 |
| BATENTE - CAÇAMBA | 695 |
| UNI-DENTE | 697 |
| **POSTO DO OPERADOR** | 698 |
| CONDICIONADOR DE AR E MONTAGEM | 698 |
| CONDICIONADOR DE AR | 700 |
| BRAÇO DO ASSENTO | 702 |
| CABINE | 703 |
| CABINE - ESTRUTURA ROPS COBERTA | 705 |
| CABINE | 707 |
| TOLDO | 711 |
| TOLDO - ESTRUTURA ROPS ABERTA | 712 |
| COMPARTIMENTO PARA LITERATURA | 713 |
| COMPRESSOR DE REFRIGERANTE | 714 |
| CONDENSADOR DO REFRIGERANTE E MONTAGEM | 716 |
| POSTO DE CONTROLE/CONSOLE DIANTEIRO | 717 |
| CONSOLE DO OPERADOR | 719 |
| CONSOLE LATERAL | 721 |
| TAMPA - CONSOLO | 727 |
| TAMPA-PAINEL TRASEIRO DO MOTOR | 728 |
| TAMPA-COLUNA | 730 |
| PORTA - LADO ESQUERDO | 731 |
| PORTA - LADO DIREITO | 733 |
| DUCTO DE AR | 735 |
| TAPETE | 739 |
| AQUECEDOR DA CABINE E MONTAGEM | 741 |
| AQUECEDOR DA CABINE | 743 |
| BUZINA ELÉTRICA | 745 |
| ALAVANCA DE CONTROLE DO GOVERNADOR | 746 |
| TUBOS - AQUECEDOR | 747 |
| TUBULAÇÕES - AQUECEDOR E AR CONDICIONADO | 749 |
| ESPELHO RETROVISOR | 751 |
| MÓDULO - INDICADOR DE ALARME | 753 |
| MOTOR - LIMPADOR DO VIDRO | 755 |
| MONTAGEM - PAINEL DE INSTRUMENTOS | 756 |
| PAINEL DE INSTRUMENTOS | 760 |
| PEDAL DO GOVERNADOR | 761 |
| CINTO DE SEGURANÇA | 762 |
| ASSENTO | 763 |
| ASSENTO COM SUSPENSÃO | 770 |
| REDUÇÃO DE RUÍDO | 776 |
| SUSPENSÃO - ASSENTO | 778 |
| TACÔMETRO - ELÉTRICO | 781 |
| LISTRA DA CABINE | 783 |
| PÁRA-SOL DA CABINE | 784 |
| LAVADOR DO VIDRO | 785 |
| JANELA DA CABINE | 787 |
| VIDRO DA PORTA | 793 |
| LIMPADOR DO VIDRO | 797 |
| **EQUIPAMENTOS DE SERVIÇO E SUPRIMENTOS** | 799 |
| DECALQUE | 799 |
| GR. DE INSTALAÇÃO - CALÇO DA RODA | 801 |
| CADEADO CONTRA VANDALISMO | 802 |
| PLACA E DECALQUE | 804 |
| PLACA LATERAL REFLETIVA | 809 |
| **ÍNDICE DE NÚMERO DE PEÇA** | B1 |


* TRADUÇÃO NÃO DISPONÍVEL NO MOMENTO DA IMPRESSÃO

# INHALTSVERZEICHNIS


| Bezeichnung | Seite |
|---|---|
| **ALLGEMEINE HINWEISE** | A38 |
| **REPARATURALTERNATIVEN** | A46 |
| **KÜHLMITTELZUSATZ** | A51 |
| **WARTUNGSTEILE** | A73 |
| **STICHWORTVERZEICHNIS** | A127 |
| **MASCHINE** | 1 |
| HECKBAGGER-TELESKOPSTIEL | 1 |
| STANDARDHECKBAGGERSTIEL | 9 |
| HECKBAGGER | 10 |
| STANDARDHECKBAGGERSTIEL | 11 |
| HECKBAGGER | 13 |
| STANDARDHECKBAGGERSTIEL | 14 |
| FAHRWERK | 15 |
| GRUNDAUSFÜHRUNG | 16 |
| UMBAUSATZ - ZULASSUNG | 16 |
| **MOTOR** | 20 |
| MOTORAUSFÜHRUNG | 20 |
| **MOTOR (GRUNDAUSFÜHRUNG)** | 24 |
| NOCKENWELLE | 24 |
| VENTILDECKEL | 25 |
| KURBELWELLE | 27 |
| MOTORBLOCK | 29 |
| ZYLINDERKOPF | 32 |
| LÜFTERANTRIEB | 34 |
| SCHWUNGRAD | 35 |
| SCHWUNGRADGEHÄUSE | 36 |
| STIRNRADGEHÄUSE | 37 |
| MOTORHUBÖSE | 39 |
| MOTORAUFLAGER | 40 |
| MOTOR- UND GETRIEBEAUFLAGER | 41 |
| ÖLWANNE | 43 |
| PLEUELSTANGE UND KOLBEN | 45 |
| MOTORSTOPFEN | 47 |
| KURBELWELLEN-RIEMENSCHEIBE | 49 |
| VENTILSTEUERUNG | 50 |
| **SCHMIERSYSTEM** | 51 |
| MOTORÖLEINFÜLLSTUTZEN | 51 |
| SCHMIERPUMPE | 52 |
| **KÜHLSYSTEM** | 53 |
| KÜHLWASSERANSCHLUSS | 53 |
| MOTORÖLKÜHLER UND FILTER-SOCKEL | 54 |
| SAUGLÜFTER | 56 |
| ANSCHLUSS - HEIZUNG U. KLIMAANLAGE | 58 |
| ÖLKÜHLERLEITUNGEN (KRAFTÜBERTRAGUNG) | 59 |
| KÜHLWASSERPUMPE | 63 |
| KÜHLER UND LÜFTER | 65 |
| KÜHLER UND HYDRAULIKÖLKÜHLER | 67 |
| **LUFTANSAUG- UND ABGASSYSTEM** | 73 |
| LUFTREINIGER | 73 |
| LUFTEINLASSDECKEL | 76 |
| AUSPUFFROHRVERLÄNGERUNG | 77 |
| LUFTFILTERWARTUNGSANZEIGE | 78 |
| DRUCKLUFTLEITUNGEN | 80 |
| SCHALLDÄMPFER | 83 |
| TURBOLADER | 84 |
| **KRAFTSTOFFSYSTEM** | 86 |
| REGLER- UND GASPEDALGESTÄNGE | 86 |
| KRAFTSTOFFILTER | 88 |
| KRAFTSTOFFLEITUNGEN | 90 |
| KRAFTSTOFFEINSPRITZPUMPE | 92 |
| KRAFTSTOFF-ENTLÜFTUNGSPUMPE | 98 |
| WASSERABSCHEIDER | 99 |
| KRAFTSTOFFTANK U. BEFESTIGUNG | 100 |
| KRAFTSTOFFTANK | 101 |
| **ELEKTRISCHE ANLAGE UND STARTSYSTEM** | 103 |
| DREHSTROMGENERATOR | 103 |
| BATTERIE | 104 |
| STELLUNGSSTEUERUNG | 112 |
| GLÜHKERZE | 113 |
| UMLAUFKÜHLWASSERHEIZUNG | 114 |
| SICHERHEITSEINBAUSATZ | 115 |
| ARBEITSLEUCHTEN | 117 |
| SCHEINWERFER U. RICHTUNGSLEUCHTE | 120 |
| ZULASSUNGSSCHILDLEUCHTE | 128 |
| BREMS- UND RÜCKLEUCHTE | 129 |
| RUNDUM-KENNLEUCHTE | 131 |
| ARBEITSLEUCHTEN | 133 |
| BELEUCHTUNGSANLAGE (STRASSENAUSRÜSTUNG) | 144 |
| WARNLEUCHTEN | 161 |
| RUNDUM-KENNLEUCHTE | 163 |
| VERBINDUNGSSTECKER | 165 |
| STARTERMOTOR | 166 |
| DRUCKSCHALTER | 169 |


* ÜBERSETZUNG ZUM ZEITPUNKT DER DRUCKLEGUNG NICHT VORHANDEN

# INHALTSVERZEICHNIS


| Bezeichnung | Seite |
|---|---|
| TEMPERATURSCHALTER | 170 |
| RÜCKFAHRWARNHORN | 171 |
| KLIMAANLAGENVERDRAHTUNG | 173 |
| SCHALTAUTOMATIKVERDRAHTUNG | 176 |
| FAHRERHAUSVERDRAHTUNG | 178 |
| KONSOLENVERDRAHTUNG | 183 |
| MOTORVERDRAHTUNG | 189 |
| HEIZUNGSVERDRAHTUNG | 193 |
| VERDRAHTUNG - SCHAUFELAUSSCHALTER U. EINSTELLER | 195 |
| FAHRERPLATTFORMVERDRAHTUNG | 196 |
| STECKDOSENVERDRAHTUNG | 202 |
| VERDRAHTUNG, HINTEN | 203 |
| SCHWINGUNGSDÄMPFUNGSVERDRAHTUNG | 206 |
| SENSORVERDRAHTUNG | 214 |
| SEITENSTÜTZENALARMVERDRAHTUNG | 215 |
| LENKVERDRAHTUNG | 217 |
| **KRAFTÜBERTRAGUNG** | 218 |
| ANTRIEBS- UND LENKACHSE | 218 |
| HINTERACHSE | 220 |
| DIFFERENTIALSPERRENGESTÄNGE | 225 |
| GETRIEBESTEUERUNG | 226 |
| DIFFERENTIAL UND TELLERRAD | 227 |
| DIFFERENTIAL | 229 |
| ANTRIEB - BAGGERLADER | 230 |
| KUPPLUNGSANTRIEB, ELAST. | 231 |
| GETRIEBEÖLFÜLLSTUTZEN | 232 |
| ACHSGEHÄUSEFLANSCH | 234 |
| VERRIEGELUNG - VIERTER GANG | 236 |
| ACHSENANBAUSATZ | 237 |
| SEITENANTRIEB - PLANETENGETRIEBE | 238 |
| KRAFTÜBERTRAGUNG | 239 |
| ANTRIEBSWELLE | 241 |
| GETRIEBE U. BEFESTIGUNG | 245 |
| MECHANISCHES GETRIEBE | 247 |
| LASTSCHALTGETRIEBE | 247 |
| WECHSELGETRIEBE | 248 |
| LASTSCHALTGETRIEBE | 254 |
| ÜBERDRUCKVENTIL | 260 |
| MAGNETVENTIL | 261 |
| REIFENVENTIL | 266 |
| RAD UND REIFEN | 267 |
| **BREMSSYSTEM** | 289 |
| FESTSTELLBREMSE | 289 |
| FESTSTELLBREMSGESTÄNGE | 290 |
| BREMSGESTÄNGE | 292 |
| HANDSTEUERHEBEL | 295 |
| BREMSTANK | 296 |
| **LENKSYSTEM** | 297 |
| LENKBETÄTIGUNG | 297 |
| LENKKNOPF | 299 |
| LENKÖLLEITUNGEN | 300 |
| ZUMESSPUMPE | 303 |
| LENKRAD | 304 |
| VORRANGVENTIL | 305 |
| **RAHMEN UND FAHRGESTELL** | 306 |
| BATTERIEKASTEN | 306 |
| FRONTSTOSSSTANGE | 311 |
| GEGENGEWICHT | 312 |
| BATTERIEDECKEL | 316 |
| SCHUTZBLECHE, VORNE | 317 |
| SCHUTZBLECHE, HINTEN | 319 |
| BODENBLECH | 320 |
| LADERRAHMEN | 322 |
| GLEITRAHMEN | 324 |
| SCHWENKRAHMEN | 326 |
| ANTRIEBSWELLENVERKLEIDUNG | 331 |
| BLITZSCHUTZ | 332 |
| LEITUNGSVERKLEIDUNG | 334 |
| MOTORHAUBE UND VERKLEIDUNG | 336 |
| MOTORHAUBE | 338 |
| SCHALLDÄMPFENDE VERKLEIDUNG | 341 |
| TYPENSCHILDBEFESTIGUNG | 342 |
| REFLEKTOR | 344 |
| SCHALLDÄMPFUNG | 345 |
| **HYDRAULIKSYSTEM** | 346 |
| DRUCKSPEICHER, HYDRAULISCHE SCHWINGUNGSDÄMPFUNG | 346 |
| VERBINDUNGSVENTIL | 347 |
| HYDRAULISCHE SCHWINGUNGSDÄMPFUNG | 348 |
| STEUERHEBEL | 350 |
| HYDRAULIKHANDSTEUERUNG | 352 |
| HYDRAULIKPEDALSTEUERUNG | 365 |
| UMRÜSTSATZ - HYDRAULIKHEBEL | 369 |
| ANSCHLUSS | 370 |
| VENTILANORDNUNGSDECKEL | 371 |
| HECKBAGGERLÖFFELZYLINDER | 372 |
| AUSLEGERZYLINDER | 376 |
| TELESKOPSTIELZYLINDER | 378 |
| HUBZYLINDER | 381 |
| KOMBISCHAUFELZYLINDER | 382 |
| SEITENSTÜTZENZYLINDER | 384 |
| STIELZYLINDER | 385 |
| SCHWENKZYLINDER | 386 |


* ÜBERSETZUNG ZUM ZEITPUNKT DER DRUCKLEGUNG NICHT VORHANDEN

# INHALTSVERZEICHNIS


| Bezeichnung | Seite |
|---|---|
| KIPPZYLINDER | 388 |
| HYDRAULIKÖLABLASS | 390 |
| HYDRAULIKSYSTEM | 391 |
| HYDRAULISCHE SCHWINGUNGSDÄMPFUNG - EINBAUSATZ | 397 |
| TIEFLÖFFELLEITUNGEN | 398 |
| TIEFLÖFFEL-HYDRAULIKNOTLEITUNGEN | 402 |
| AUSLEGERLEITUNGEN | 440 |
| LÖFFELZYLINDERLEITUNGEN | 441 |
| ABLASSLEITUNGEN | 443 |
| TELESKOPSTIELLEITUNGEN | 445 |
| HUBZYLINDERLEITUNGEN | 446 |
| LASTSTEUERVENTILLEITUNGEN | 451 |
| LADERZUSATZLEITUNGEN | 462 |
| KOMBISCHAUFELLEITUNGEN | 466 |
| VORSTEUERLEITUNGEN | 474 |
| HYDRAULIKPUMPE UND LEITUNGEN | 477 |
| *LINES GP-RETURN | 486 |
| SCHWINGUNGSDÄMPFUNGSLEITUNGEN | 487 |
| SEITENSCHUBSPERRLEITUNGEN | 489 |
| SEITENSTÜTZENLEITUNGEN | 497 |
| STIELZYLINDERLEITUNGEN | 501 |
| SCHWENKLEITUNGEN | 509 |
| NEIGEZYLINDERLEITUNGEN | 519 |
| HYDRAULIKFUSSSTEUERUNGSSPERRE | 523 |
| HYDRAULIKSPERRE (HANDBEDIENUNG) | 524 |
| VENTILANORDNUNGS-BEFESTIGUNGSSATZ | 525 |
| ZYLINDERAUFHÄNGUNG | 527 |
| HYDRAULIKPUMPENBEFESTIGUNG | 528 |
| LEITUNGS-BEFESTIGUNGSTEILE | 529 |
| KOLBENPUMPE | 533 |
| KOLBENPUMPENUMLAUFSATZ | 536 |
| ZAPFWELLE | 537 |
| SEITENSTÜTZEN | 538 |
| HYDRAULIKTANK | 539 |
| VENTILBLOCK U. BEFESTIGUNG | 541 |
| 4-BLOCK-VENTILSATZ | 542 |
| 5-VENTIL-BLOCK | 542 |
| 6-FACH-VENTILBLOCK | 543 |
| ZUSATZVENTIL | 544 |
| VENTILSATZ (2-VENTIL) | 547 |
| VENTILSATZ (3-VENTIL) | 549 |
| VENTILSATZ (4-VENTIL) | 551 |
| VENTILSATZ (5-VENTIL) | 553 |
| VENTILSATZ (6-VENTIL) | 556 |
| *VALVE GP-CHECK | 558 |
| STEUERVENTIL | 559 |
| LASTSTEUERVENTIL | 579 |
| *VALVE GP-PUMP CONTROL | 581 |
| MAGNETVENTIL | 584 |
| **ARBEITSGERÄTE** | 586 |
| HUBARM | 586 |
| AUSLEGER | 588 |
| *BOOM GP | 589 |
| TRANSPORTHALTERUNG | 590 |
| GEHÄUSE - AUSFAHRBARER STIEL | 592 |
| TRANSPORTSPERRE | 593 |
| HECKBAGGERLÖFFELGESTÄNGE | 594 |
| LADESCHAUFEL | 597 |
| SEITENSTÜTZENFUSSSPERRE | 598 |
| TRANSPORTSPERRE | 599 |
| STIELAUFHÄNGUNG | 604 |
| SEITENSTÜTZENPLATTEN | 605 |
| SEITENSTÜTZEN | 606 |
| TELESKOPSTIEL | 609 |
| LÖFFELSTIEL | 613 |
| **ARBEITSGERÄTE** | 615 |
| KOMBISCHAUFEL | 615 |
| *BUCKET AR-MULTIPURPOSE | 620 |
| UNIVERSALSCHAUFEL | 621 |
| HECKBAGGERLÖFFEL | 625 |
| KOMBISCHAUFEL | 666 |
| SCHNELLWECHSELEINRICHTUNG | 677 |
| SCHNEIDMESSER | 683 |
| GABEL | 685 |
| PALETTENGABEL | 686 |
| SCHAUFELSCHUTZ | 687 |
| SCHAUFELAUFHÄNGUNG | 689 |
| GABELBEFESTIGUNG | 693 |
| SCHAUFELTRANSPORTAUSFÜHRUNG | 694 |
| SCHAUFELANSCHLAG | 695 |
| UNIVERSAL-ZAHNSPITZE | 697 |
| **FAHRERHAUS** | 698 |
| KLIMAANLAGE UND AUFHÄNGUNG | 698 |
| KLIMAANLAGE | 700 |
| ARMLEHNE | 702 |
| FAHRERHAUS | 703 |
| FAHRERHAUS MIT ÜBERROLLSCHUTZ | 705 |
| FAHRERHAUS | 707 |
| WETTERDACH | 711 |
| FAHRERHAUS M. OFFENEM ÜBERROLLSCHUTZ | 712 |
| LITERATURABLAGE | 713 |
| KÄLTEMITTELKOMPRESSOR | 714 |


* ÜBERSETZUNG ZUM ZEITPUNKT DER DRUCKLEGUNG NICHT VORHANDEN

# INHALTSVERZEICHNIS


| Bezeichnung | Seite |
|---|---|
| KÄLTEMITTELKONDENSATOR U. BEFESTIGUNGSTEILE | 716 |
| FRONTSTEUERPULT | 717 |
| STEUERKONSOLE | 719 |
| SEITENKONSOLE | 721 |
| STEUERKONSOLENABDECKUNG | 727 |
| FEUERWANDABDECKUNG | 728 |
| PFOSTENABDECKUNG | 730 |
| FAHRERHAUSTÜR (LINKS) | 731 |
| FAHRERHAUSTÜR (RECHTS) | 733 |
| LUFTKANAL | 735 |
| FUSSMATTE | 739 |
| FAHRERHAUSHEIZUNG U. BEFESTIGUNGSTEILE | 741 |
| FAHRERHAUSHEIZUNG | 743 |
| WARNHORN, ELEKTR. | 745 |
| DREHZAHLREGLER - STEUERHEBEL | 746 |
| HEIZUNGSLEITUNGEN | 747 |
| HEIZUNGS- U. KLIMAANLAGENLEITUNGEN | 749 |
| RÜCKSPIEGEL | 751 |
| WARNANZEIGEMODUL | 753 |
| SCHEIBENWISCHERMOTOR | 755 |
| INASTRUMENTENTAFEL-EINBAUSATZ | 756 |
| INSTRUMENTENTAFEL | 760 |
| GASPEDAL | 761 |
| SICHERHEITSGURT | 762 |
| FAHRERSITZ | 763 |
| SCHWINGSITZ | 770 |
| SCHALLDÄMPFUNG | 776 |
| FAHRERSITZFEDERUNG | 778 |
| DREHZAHLMESSER, ELEKTR. | 781 |
| FAHRERHAUS - HALTETEILE | 783 |
| FAHRERHAUS, SONNENBLENDE | 784 |
| SCHEIBENWASCHANLAGE | 785 |
| FAHRERHAUSFENSTER | 787 |
| TÜRFENSTER | 793 |
| SCHEIBENWISCHER | 797 |
| **WARTUNGSAUSRÜSTUNG UND -ZUBEHÖR** | 799 |
| AUFKLEBER | 799 |
| UNTERLEGKEIL - EINBAUSATZ | 801 |
| VORHÄNGESCHLOSS | 802 |
| SCHILD UND AUFKLEBER | 804 |
| RÜCKSTRAHLER | 809 |
| **ERSATZTEILNUMMERNINDEX** | B1 |


* ÜBERSETZUNG ZUM ZEITPUNKT DER DRUCKLEGUNG NICHT VORHANDEN

# GENERAL INFORMATION

## 1. MACHINE IDENTIFICATION

Caterpillar machines are identified by Product Identification Numbers (PIN). Some components included in a machine may be identified by Serial Numbers (S/N). Typical components that will be serialized include engines, transmissions, bulldozers, and rippers. The machine and engine are further identified by arrangement numbers and in some cases modification numbers. These numbers are shown on the product identification plate(s) and on the master plate in the operator's compartment.

Caterpillar dealers need all of these numbers to determine accurate parts identification.

SIS ***New Feature***

Effective First Quarter 2001 the Caterpillar Product Identification Number (PIN) changed from 8 to 17 characters. In an effort to provide uniform equipment identification, Caterpillar and other construction equipment manufacturers are moving to comply with the latest version of the product identification numbering standard. Non-road machine PINs are defined by ISO 10261. The new PIN format will apply to all Caterpillar machines and generator sets. The PIN plates and frame marking will display the 17 character PIN. The new format will look like the following:

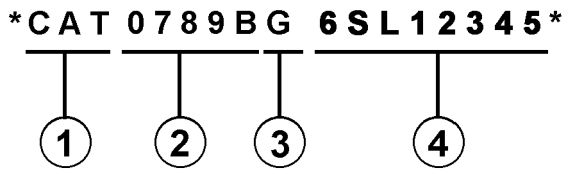


Where:

1. Caterpillar's World Manufacturing Code (characters 1-3)

2. Machine Descriptor (characters 4-8)

3. Check Character (character 9)

4. Machine Indicator Section (MIS) or Product Sequence Number (characters 10-17). These were previously referred to as the Serial Number.

Machines and generator sets produced before First Quarter 2001 will maintain their 8 character PIN format.

Components such as engines, transmissions, axles, etc. and work tools will continue to use an 8 character Serial Number (S/N).

## 2. ORDERING PARTS

**⚠ WARNING**

**When replacement parts are required for this product Caterpillar recommends using Caterpillar replacement parts or parts with equivalent specifications including, but not limited to, physical dimensions, type, strength and material.**

**Failure to heed this warning can lead to premature failures, product damage, personal injury or death.**

Quality Caterpillar replacement parts are available from Caterpillar dealers throughout the world. Their parts inventories are up to date and include all parts normally required to protect your investment in Caterpillar machines. Dealers may offer repair kits or remanufactured parts to allow selection of the most effective repair alternative for a particular situation. When ordering parts, your order should specify the quantity, part number, part name, and the serial number/product identification number of the machine for which the parts are needed.

## 3. PARTS MANUAL ORGANIZATION

Product information in this manual is presented as "information elements" that represent all of the components for the specific model. Engine Arrangement and Seat Group are examples of information elements. The information elements are organized alphabetically by part name and secondarily by part number within each major section of the manual.

## 4. TABLE OF CONTENTS

A table of contents (TOC) is found at the beginning of the manual. The TOC lists each section of the manual with a complete list of all information elements organized as they appear in the manual. Page numbers are provided for quick reference to detailed parts identification illustrations and serviceable consist lists.

## 5. MAINTENANCE PARTS INDEX

The Maintenance Parts Index, located near the beginning of the manual, references most frequently used maintenance part numbers, providing description, quantity, usage and page number. This information is organized alphabetically by part description.

### 6. INDEX

The index located near the front of the manual is an alphabetical listing of all information elements included in the manual. Page numbers are provided for quick reference to detailed parts identification illustrations and serviceable consist lists.

### 7. PART NUMBER INDEX

A numerical index listing all part numbers and the corresponding page number(s) appears at the back of the manual.

### 8. CAPTIONS

Captions located at the beginning of each information element identify the part number and part name along with additional descriptive information. PIN and S/N information found in each caption should be used to select correct information for a specific machine. Field replacement options, identification of optional attachment components, and where used ("part of") information is also provided.

The first line of a caption is shown in larger type font to indicate the beginning of an information element. Captions for additional pages that may be required to illustrate an information element will be shown in standard type font and will include the term *(contd.)* .

### 9. NON-SERVICED PARTS

In some instances it is necessary to display non-serviced parts that are a link to a lower level serviceable consist lists. These non-serviced part numbers are shown in *italic* type indicating that they are not available.

### 10. PARTS LIST REFERENCE NUMBERS

Numbers shown in the Ref No column correspond to numbers used in the associated graphic(s). An alphabetic suffix may be added to a reference number to identify lower level consist items. Numbers shown in the Graphic Ref column refer to the graphic number identifier displayed in the lower left corner of each illustration. The Graphic Ref number may be used in combination with the item Ref No to determine the correct part number. There may be intentional omission of a Ref No in a consist list as information is updated to reflect the latest serviceable part numbers.

### 11. INDENTED PART NAMES

When a part name is indented in a parts list, it is part of (included in) the group or assembly under which it is indented.

### 12. ILLUSTRATION REFERENCE LETTERS

When necessary, illustrations contain reference letters (A, B, C etc.) that are intended to track lines and harnesses from one point to another. They are also used to show where to reconnect illustrations that have been separated.

### 13. ABBREVIATIONS AND SYMBOLS

O.D. – Outside Diameter
I.D. – Inside Diameter
A – Not Part Of This Group
B – Use As Required
C – Change From Previous Type
D – Order By The Meter
E – Order By The Centimeter
F – Not Shown
G – Order By The Inch
I – See Hose Fabrication Guide
M – Metric Part
R – Remfg Part May Be Available
Y – Separate Illustration
Z – Not Serviced Separately

SIS *New Feature*

### 14.<END>

This symbol indicates the end of an information element.

**NOTE:**

**Continuing improvement and advancement of product design may cause changes to your machine which may not be included in this publication. Whenever a question arises regarding your caterpillar product or this publication, please consult your caterpillar dealer for the latest available information.**

## FRAME AND BODY

### 8E-3299 PLATFORM GP-CAB

PIN 38K1-99999

SMCS-7253 — 100090751

| NOTE | REF NO | GRAPHIC REF | PART NUMBER | QTY | PART NAME 1 2 3 4 5 6 (PRODUCT LEVEL) | SEE PAGE |
|---|---|---|---|---|---|---|
| | 1 | 1 | 3T-3963 | 1 | PLATE AS | |
| | 2 | 1 | 6M-3992 | 25 | BOLT (3/8-16X.750IN) | |
| | 3 | 1 | 6P-1075 | 41 | WASHER-HARD (38MM THK) | |
| | 4 | 1 | 9P-1444 | 2 | SUPPORT AS-FOOT | |
| | 5 | 1 | 9P-2229 | 19 | BOLT (1/2-13X1IN) | |
| | | 1 | 6P-[illegible]4 | 19 | WASHER-HARD (41MM THK) | |
| | 6 | 1 | 8E-8136 | 1 | COVER AS-LH | |
| | | 1 | 9P-2979 | 6 | NUT-WELD (3/8-16 THD) | |
| | | 1 | 1P-8198 | 1 | CLIP | |
| | 7 | 1 | 7E-3411 | 4 | COVER | |
| | 8 | 1 | 6J-0468 | 18 | SCREW-HEAD (3/8-16X.875IN) | |
| | 9 | 1 | [illegible]-4474 | 1 | COVER | |
| | | 1 | 8E-8917 | 1 | GASKET | |
| | 10 | 1 | 8E-3249 | 1 | [illegible] | |
| | | 1 | 8E-2290 | 1 | GASKET | |
| | 11 | 1 | 3T-3635 | 1 | HANDHOLD | |
| | 12 | 1 | 8E-8878 | 1 | COVER AS | |
| | | 1 | 9P-2979 | 8 | NUT-WELD (3/8-16 THD) | |
| | | 1 | 8E-8078 | 1 | GASKET | |
| | 13 | 1 | 7T-0131 | 1 | FLOORPLATE AS | |
| | | 1 | 1F-0748 | 4 | NUT-WELD (1/2-13 THD) | |
| | 14 | 1 | 7V-8087 | 1 | PLUG-BUTTON | |
| | 15 | 1 | 7T-0136 | 1 | PLATE AS | |
| | | 1 | 9P-2979 | 5 | NUT-WELD (3/8-16 THD) | |
| | 16 | 1 | 7T-8066 | 1 | COVER | |
| | | 1 | 7T-8779 | 1 | GASKET | |
| | 17 | 1 | 3T-3981 | 1 | PLATE AS | |
| | 18 | 1 | 6T-9364 | 4 | BOLT (1/4-20X.625IN) | |
| M | | 1 | 6T-4205 | 4 | WASHER-HARD (28MM THK) | |
| | 19 | 1 | 6X-8464 | 1 | FLOOR MAT | |
| | 20 | 1 | 8E-8846 | 1 | MODULE AS-OPERATOR | |
| | 21 | 1 | 3T-3634 | 1 | HANDHOLD | |
| | 22 | 1 | 9P-8571 | 2 | PLUG | |
| | 23 | 2 | 6T-9364 | 4 | BOLT (1/4-20X.625IN) | |
| M | | 2 | 6T-4205 | 4 | WASHER-HARD (28MM THK) | |
| | 24 | 2 | 6M-3062 | 17 | BOLT (3/8-16X.750IN) | |
| | 25 | 2 | 6P-1075 | 21 | WASHER-HARD (38MM THK) | |
| | 26 | 2 | 7T-0136 | 1 | SEAL | |
| | 27 | 2 | 7X-0376 | 2 | BOLT (3/4-10X5IN) | |
| | | 2 | 7X-0682 | 2 | WASHER-HARD (64MM THK) | |
| | 28 | 2 | 3T-3462 | 2 | PLATE | |
| | 29 | 2 | 3T-6290 | 1 | PLATE AS | |
| | | 2 | 7E-4628 | 8 | SPACER | |
| | 30 | 2 | 3T-6281 | 1 | SEAL | |
| | 31 | 2 | 7E-8917 | 1 | GASKET | |
| | 32 | 2 | 7E-8916 | 1 | COVER AS | |
| | | 2 | 2R-2376 | 2 | WASHER | |
| | | 2 | 6P-9628 | 2 | SCREW-KNURLED | |
| | 33 | 2 | 9W-3429 | 1 | COVER | |
| | 34 | 2 | 8E-8697 | 1 | COVER | |
| | 35 | 2 | 6D-3031 | 6 | SCREW-SOCKET HEAD | |
| | 36 | 2 | 9W-3142 | 8 | MOUNTING | |
| | 37 | 2 | 9W-9627 | 2 | PLATE | |
| | 38 | 2 | 7X-0380 | 2 | BOLT (7/8-9X5IN) | |
| | | 2 | 7X-0672 | 2 | WASHER-HARD | |
| | 39 | 2 | 4L-8454 | 4 | BOLT (3/8-16X1.0IN) | |
| | 40 | 2 | 3T-4788 | 1 | COVER | |

12 FRAME AND BODY — 1 of 4 — SELP4570-01

## FRAME AND BODY

8E-3299 PLATFORM GP-CAB *(contd.)* — 100090751

| NOTE | REF NO | GRAPHIC REF | PART NUMBER | QTY | PART NAME 1 2 3 4 5 6 (PRODUCT LEVEL) | SEE PAGE |
|---|---|---|---|---|---|---|
| | 41 | 2 | 8E-2515 | 1 | COVER | |
| | 42 | 2 | 7T-0134 | 1 | PLATE | |
| | 43 | 2 | 7T-0138 | 1 | GASKET | |
| | 44 | 2 | 7E-8724 | 1 | GASKET | |
| | 45 | 2 | 7E-8722 | 1 | COVER | |
| | 46 | 2 | 6V-1960 | 2 | PLUG-BUTTON | |

M-METRIC PART

SELP4570-01 — 2 of 4 — FRAME AND BODY 13

## FRAME AND BODY

8E-3299 PLATFORM GP-CAB *(contd.)* — 100090751

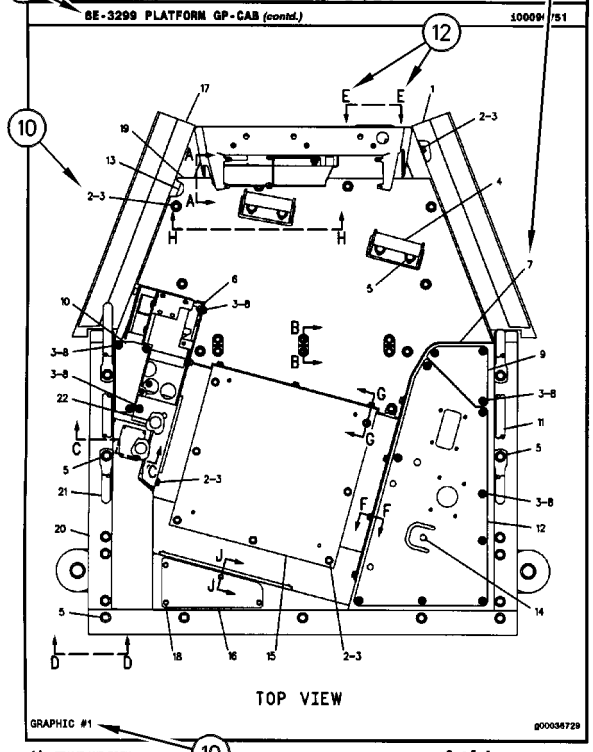


14 FRAME AND BODY — 3 of 4 — SELP4570-01

## FRAME AND BODY

8E-3299 PLATFORM GP-CAB *(contd.)* — 100090751

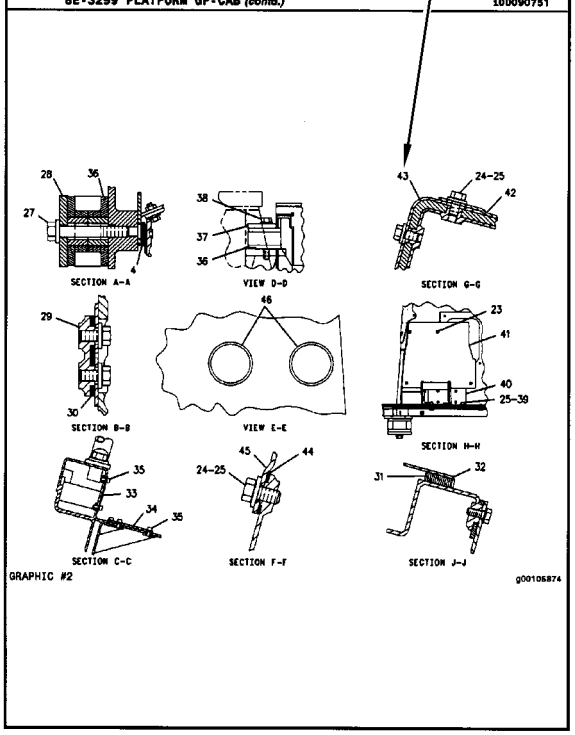


SELP4570-01 — 4 of 4 — FRAME AND BODY 15

# GÉNÉRALITÉS

## 1. IDENTIFICATION DE LA MACHINE

Toutes les machines Caterpillar portent un numéro d'identification (PIN). Certains composants des machines peuvent porter des numéros de série (S/N). En général, parmi les composants qui portent des numéros de série il y a les moteurs, les transmissions, les bulldozers et les rippers. En plus, la machine et le moteur peuvent recevoir des numéros de version, et dans certains cas, de modification. Ces numéros figurent sur les plaques de numéro de série et sur la plaque signalétique principale qui se trouve dans le poste de conduite.

Les concessionnaires Caterpillar doivent connaître tous ces numéros pour identifier correctement les pièces.

SIS ***Nouvelle Caractéristique***

À partir du premier trimestre 2001, le numéro d'identification produit (PIN) Caterpillar passe de 8 à 17 caractères. Afin de permettre une identification uniforme des matériels, Caterpillar et d'autres constructeurs de machines de travaux publics s'efforcent de se conformer à la norme la plus récente portant sur les numéros d'identification des produits. Les numéros d'identification (PIN) de machines de chantier sont définis par la norme ISO 10261. Le nouveau format du numéro d'identification est valable pour toutes les machines et tous les groupes électrogènes Caterpillar. Le numéro d'identification produit (PIN) figurant sur la plaque et sur le châssis se composera de 17 caractères. Le nouveau format ressemblera à ceci:

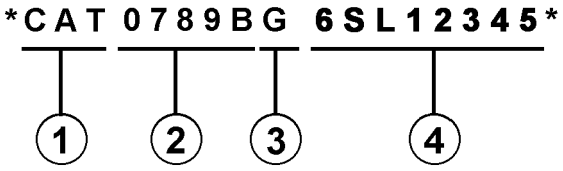


Il se décomposera de la façon suivante:

1. Code international de fabrication de Caterpillar (caractères 1 à 3)

2. Descriptif de la machine (caractères 4 à 8)

3. Contrôle (caractère 9)

4. Indicateur machine (MIS) ou numéro de séquence produit (caractères 10 à 17). Ceux-ci étaient auparavant désignés sous le terme de numéro de série.

Les machines et les groupes électrogènes construits avant le premier trimestre 2001 garderont le format à 8 caractères du numéro d'identification produit (PIN).

Les organes tels que les moteurs, les boîtes de vitesses, les essieux, etc., continueront d'être désignés par un numéro de série (S/N) à 8 caractères.

## 2. COMMANDE DE PIÈCES

**⚠ DANGER**

**Lorsqu'il faut remplacer des pièces de rechange pour ce produit Caterpillar recommande d'utiliser les pièces de rechange Caterpillar ou les pièces qui ont des spécifications équivalentes dont les dimensions physiques, le type, la force et le matériau. Ces équivalences ne se limitent pas à l'énoncé précédent.**

**L'inobservation de cette mise en garde peut entraîner des défaillances prématurées, des dommages au produit, des blessures ou même la mort.**

Les concessionnaires Caterpillar fournissent dans le monde entier des pièces de rechange de qualité Caterpillar. Leurs stocks de pièces sont constamment réapprovisionnés et comptent toutes les pièces nécessaires pour assurer la bonne marche de vos machines Caterpillar. Certains concessionnaires proposent également des kits de réparation ou des pièces rénovées, ce qui permet de choisir la solution la plus économique dans une situation donnée. Lors des commandes de pièces, mentionner la quantité, le numéro et la désignation des pièces ainsi que le numéro de série ou le numéro d'identification (PIN) de la machine pour laquelle ces pièces sont requises.

## 3. ORGANISATION DU CATALOGUE DE PIÈCES

Les renseignements sur les produits sont présentés sous forme de "Information element" (élément d'information) représentant tous les composants d'un modèle donné. "Engine Arrangement" (version de moteur) et "Seat Group" (assemblage de siège)" sont des exemples d'éléments d'information. Les éléments d'information sont classés par ordre alphabétique par la désignation standard des pièces et par numéros de pièces dans chaque partie importante du manuel.

### 4. TABLE DES MATIÈRES

SIS *Nouvelle Caractéristique*

La table des matières se trouve au début du manuel. La table des matières fournit la liste de tous les chapitres du manuel avec une liste complète de tous les éléments d'information classés par ordre d'apparition dans le manuel. Les numéros de page sont fournis afin que l'utilisateur puisse trouver rapidement les illustrations détaillées concernant l'identification des pièces et les listes des pièces d'entretien.

### 5. INDEX DES PIÈCES D'ENTRETIEN

La rubrique "Index des pièces d'entretien" qui se trouve au début du manuel renvoie aux pièces d'entretien les plus fréquemment utilisées en précisant la désignation, la quantité, là où la pièce est utilisée et le numéro de page. Ces pièces sont classés par ordre alphabétique.

### 6. INDEX

L'index qui se trouve vers le début du manuel est une liste alphabétique de tous les éléments d'information du manuel. Les numéros de page sont fournis afin que l'utilisateur puisse trouver rapidement les illustrations détaillées concernant l'identification des pièces et les listes des pièces d'entretien.

### 7. INDEX DES NUMÉROS DE PIÈCES

Une liste numérique de tous les numéros de pièces et des pages correspondantes se trouve à la fin du manuel.

### 8. LÉGENDES

Les légendes qui se trouvent en haut de chaque page de chaque élément d'information fournissent le numéro de pièce, la désignation ainsi que des renseignements supplémentaires sur les pièces. Les renseignements concernant les numéros de série (S/N) qui se trouvent dans chaque légende doivent être utilisés pour sélectionner les informations correctes pour un moteur donné. Les informations concernant les options de remplacement sur le chantier, l'identification des composants des équipements offerts en option et les lieux d'application sont aussi fournies.

SIS *Nouvelle Caractéristique*

Les lettres de la première ligne d'une légende sont présentées en police plus grande afin d'indiquer le début d'une unité d'information. Les légendes qui pourraient être requises pour des pages supplémentaires afin d'illustrer une unité d'information seront présentées en police standard et comprendront le terme (à suivre).

### 9. PIÈCES NON FOURNIES

SIS *Nouvelle Caractéristique*

Dans certains cas, il est nécessaire d'indiquer les pièces non fournies qui sont en aval de la liste des pièces d'entretien. Les numéros des pièces non fournies dans la liste des pièces et les légendes seront en italique pour signaler qu'ils ne sont pas disponibles.

### 10. NUMÉROS DE RÉFÉRENCE DE LA LISTE DES PIÈCES

SIS *Nouvelle Caractéristique*

Les numéros indiqués dans la colonne des numéros de références correspondent aux numéros utilisés dans les illustrations auxquelles ils sont associés. Un suffixe alphabétique peut être ajouté à un numéro de référence pour identifier la liste des articles en aval. Les numéros indiqués dans la colonne de référence de l'illustration renvoient à l'identification du numéro affiché dans le coin inférieur gauche de chaque illustration. Le numéro de référence de l'illustration pourrait être utilisé avec le numéro de référence de l'article pour déterminer le numéro de pièce correct. Il peut y avoir une omission intentionnelle d'un numéro de référence dans une liste de pièces suite à la mise à jour des informations en vue de refléter les numéros de pièces les plus récentes.

### 11. DÉSIGNATIONS DE PIÈCES EN RETRAIT

Lorsqu'une désignation de pièce est en retrait, cela veut dire que l'article en regard fait partie de l'ensemble sous lequel il figure.

### 12. LETTRES DE RÉFÉRENCE DES ILLUSTRATIONS

Quand cela est nécessaire, les illustrations comportent des lettres de référence (A, B, C, etc.) pour montrer le trajet des canalisations et faisceaux de câbles d'un point à l'autre. Elles sont utilisées également pour indiquer où relier les illustrations séparées auparavant.

## 13. ABRÉVIATIONS ET SYMBOLES

O.D. – Diamètre extérieur
I.D. – Diamètre intérieur
A – Ne fait pas partie de ce groupe
B – Utiliser selon besoin
C – Modification
D – Commander par mètre
E – Commander par centimètre
F – Non représenté
G – Commander par pouce
I – Voir "Hose Fabrication Guide"
M – Pièce métrique
R – Pièce rénovée éventuellement disponible
Y – Illustration séparée
Z – Non fourni séparément

**NOTA:**

En raison du progrès technique et des améliorations continuelles apportées au matériel, votre machine comporte peut-être des modifications qui n'apparaissent pas dans la présente publication. En cas de doute sur un détail de votre machine Caterpillar ou sur le texte de la présente publication, adressez-vous à votre concessionnaire Caterpillar.

## FRAME AND BODY

### 8E-3299 PLATFORM GP-CAB

PIN 38K1-99999

SMCS-7253 — 100090751

| NOTE | REF NO | GRAPHIC REF | PART NUMBER | QTY | PART NAME 1 2 3 4 5 6 (PRODUCT LEVEL) | SEE PAGE |
|---|---|---|---|---|---|---|
| | 1 | 1 | 3T-3963 | 1 | PLATE AS | |
| | 2 | 1 | 6B-3992 | 25 | BOLT (3/8-16X.750IN) | |
| | 3 | 1 | 6P-1075 | 41 | WASHER-HARD (3MM THK) | |
| | 4 | 1 | 8P-1444 | 2 | SUPPORT AS-FOOT | |
| | 5 | 1 | 6P-2229 | 19 | BOLT (1/2-13X1IN) | |
| | | 1 | [illegible] | 19 | WASHER-HARD (4MM THK) | |
| | 6 | 1 | 8E-8136 | 1 | COVER AS-LH | |
| | | 1 | 9F-2979 | 6 | NUT-WELD (3/8-16 THD) | |
| | | 1 | 1P-8198 | 1 | CLIP | |
| | 7 | 1 | 7E-3411 | 4 | COVER | |
| | 8 | 1 | 6J-0468 | 18 | SCREW-HEAD (3/8-16X.875IN) | |
| | 9 | 1 | [illegible]-6474 | 1 | COVER | |
| | | 1 | 8E-8917 | 1 | GASKET | |
| | 10 | 1 | 8E-3249 | 1 | [illegible] | |
| | | 1 | 8E-2290 | 1 | GASKET | |
| | 11 | 1 | 3T-3635 | 1 | HANDHOLD | |
| | 12 | 1 | 8E-8878 | 1 | COVER AS | |
| | | 1 | 9F-2979 | 8 | NUT-WELD (3/8-16 THD) | |
| | | 1 | 8E-8878 | 1 | GASKET | |
| | 13 | 1 | 7T-0131 | 1 | FLOORPLATE AS | |
| | | 1 | 1F-0748 | 4 | NUT-WELD (1/2-13 THD) | |
| | 14 | 1 | 7V-8087 | 1 | PLUG-BUTTON | |
| | 15 | 1 | 7T-0136 | 1 | PLATE AS | |
| | | 1 | 9F-2979 | 5 | NUT-WELD (3/8-16 THD) | |
| | 16 | 1 | 7T-8066 | 1 | COVER | |
| | | 1 | 7T-8779 | 1 | GASKET | |
| | 17 | 1 | 3T-3981 | 1 | PLATE AS | |
| | 18 | 1 | 6T-9364 | 4 | BOLT (1/4-20X.625IN) | |
| M | | 1 | 6T-4205 | 4 | WASHER-HARD (2MM THK) | |
| | 19 | 1 | 6X-8464 | 1 | FLOOR MAT | |
| | 20 | 1 | 8E-8846 | 1 | MODULE AS-OPERATOR | |
| | 21 | 1 | 3T-3634 | 1 | HANDHOLD | |
| | 22 | 1 | 9P-8571 | 2 | PLUG | |
| | 23 | 2 | 6T-9364 | 4 | BOLT (1/4-20X.625IN) | |
| M | | 2 | 6T-4205 | 4 | WASHER-HARD (2MM THK) | |
| | 24 | 2 | 6B-3062 | 17 | BOLT (3/8-16X.750IN) | |
| | 25 | 2 | 6P-1075 | 21 | WASHER-HARD (3MM THK) | |
| | 26 | 2 | 7T-0136 | 1 | SEAL | |
| | 27 | 2 | 7X-0376 | 2 | BOLT (3/4-10X5IN) | |
| | | 2 | 7X-0682 | 2 | WASHER-HARD (6MM THK) | |
| | 28 | 2 | 3T-3462 | 2 | PLATE | |
| | 29 | 2 | 3T-6290 | 1 | PLATE AS | |
| | | 2 | 7E-6628 | 8 | SPACER | |
| | 30 | 2 | 3T-6281 | 1 | SEAL | |
| | 31 | 2 | 7E-8917 | 1 | GASKET | |
| | 32 | 2 | 7E-8918 | 1 | COVER AS | |
| | | 2 | 2R-2376 | 2 | WASHER | |
| | | 2 | 6P-9628 | 2 | SCREW-KNURLED | |
| | 33 | 2 | 9W-3429 | 1 | COVER | |
| | 34 | 2 | 8E-8697 | 1 | COVER | |
| | 35 | 2 | 6D-3031 | 8 | SCREW-SOCKET HEAD | |
| | 36 | 2 | 9W-3142 | 8 | MOUNTING | |
| | 37 | 2 | 9W-9627 | 2 | PLATE | |
| | 38 | 2 | 7X-0380 | 2 | BOLT (7/8-9X5IN) | |
| | | 2 | 7X-0672 | 2 | WASHER-HARD | |
| | 39 | 2 | 4L-8454 | 4 | BOLT (3/8-16X1.0IN) | |
| | 40 | 2 | 3T-4788 | 1 | COVER | |

12 FRAME AND BODY — 1 of 4 — SELP4570-01

## FRAME AND BODY

### 8E-3299 PLATFORM GP-CAB (contd.)

100090751

| NOTE | REF NO | GRAPHIC REF | PART NUMBER | QTY | PART NAME 1 2 3 4 5 6 (PRODUCT LEVEL) | SEE PAGE |
|---|---|---|---|---|---|---|
| | 41 | 2 | 8E-2515 | 1 | COVER | |
| | 42 | 2 | 7T-0134 | 1 | PLATE | |
| | 43 | 2 | 7T-0138 | 1 | GASKET | |
| | 44 | 2 | 7E-8724 | 1 | GASKET | |
| | 45 | 2 | 7E-8723 | 1 | COVER | |
| | 46 | 2 | 6V-1960 | 2 | PLUG-BUTTON | |

M-METRIC PART

SELP4570-01 — 2 of 4 — FRAME AND BODY 13

## FRAME AND BODY

### 8E-3299 PLATFORM GP-CAB (contd.)

100090751

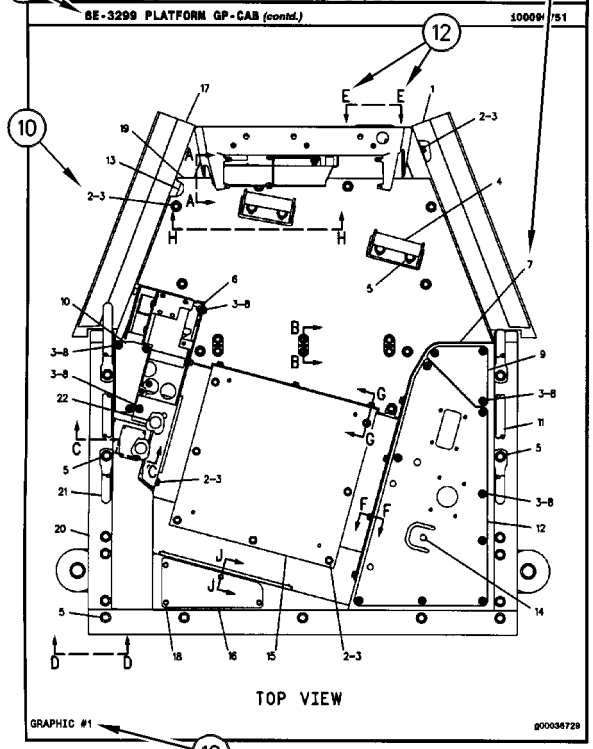


14 FRAME AND BODY — 3 of 4 — SELP4570-01

## FRAME AND BODY

### 8E-3299 PLATFORM GP-CAB (contd.)

100090751

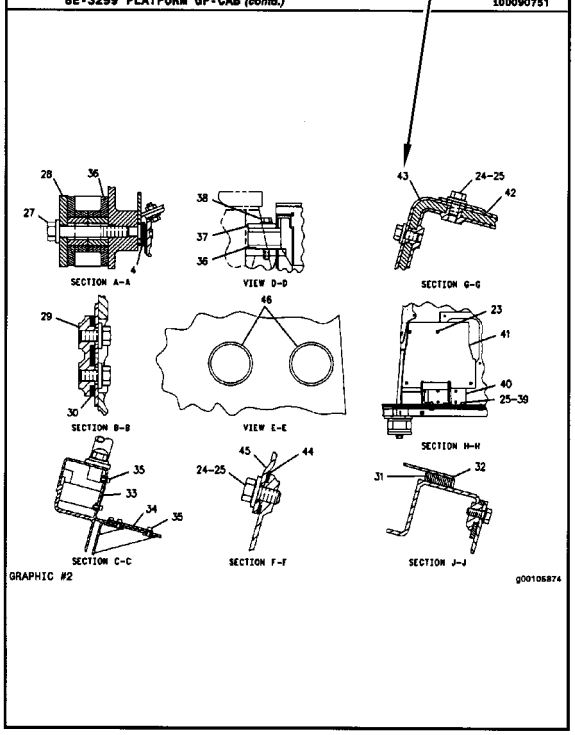


SELP4570-01 — 4 of 4 — FRAME AND BODY 15

# INFORMACIÓN GENERAL

## 1. MÁQUINAS

Las máquinas Caterpillar se identifican con Números de Identificación del Producto (PIN). Algunos componentes incluídos en la máquina pueden estar identificados con Números de Serie (N/S). Los componentes que tienen típicamente esta identificación incluyen motores, transmisiones, hojas topadoras y desgarradores. La máquina y el motor se identifican además con Números de Configuración y en algunos casos, Números de Modificación. Estos números están en las placas de identificación del producto o en la placa principal en la cabina del operador.

Los distribuidores Caterpillar necesitan estos números para identificar con exactitud los números de piezas de repuesto.

SIS ***Nueva Característica***

A partir del primer trimestre del 2001, el Número de Identificación de Producto (PIN) de Caterpillar cambió de 8 a 17 caracteres. Para hacer más uniforme el método de identificación de equipos, Caterpillar y otros fabricantes de equipo de construcción han tomado medidas para cumplir con la versión más reciente de la norma de numeración de identificación de productos. Los Números de Identificación de Producto para máquinas que no se operan en carreteras son definidos por la norma ISO 10261. El nuevo formato PIN corresponderá a todas las máquinas y grupos electrógenos Caterpillar. Las placas y los caracteres PIN estampados en el bastidor mostrarán el PIN de 17 caracteres. El nuevo formato tendrá la apariencia siguiente:

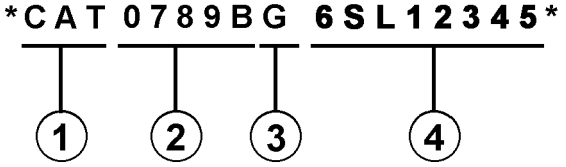


Significado de los caracteres:

1. Código de Fabricación Mundial de Caterpillar (caracteres 1-3)

2. Sección Descriptor de la Máquina (caracteres 4-8)

3. Carácter de Verificación (carácter 9)

4. Sección Indicador de la Máquina (MIS) o Número de Secuencia de Producto (caracteres 10-17). Anteriormente, estos caracteres constituían el Número de Serie.

Las máquinas y grupos electrógenos producidos antes del primer semestre del 2001 mantendrán su formato PIN de 8 caracteres.

Los componentes como motores, transmisiones, ejes, herramientas de trabajo, etc., continuarán usando un Número de Serie (S/N) de 8 caracteres.

## 2. COMO PEDIR REPUESTOS

**⚠ ADVERTENCIA**

**Cuando se necesiten piezas de repuesto para este producto, Caterpillar recomienda usar piezas de repuesto Caterpillar o piezas que tengan especificaciones equivalentes incluyendo, pero sin estar limitadas a, dimensiones físicas, tipo, fortaleza y material.**

**El no hacer caso de esta advertencia puede llevar a fallas prematuras, daños al producto y lesiones graves o mortales.**

Las piezas de repuesto Caterpillar de calidad están a la disposición de los distribuidores Caterpillar en todo el mundo. Sus existencias actualizadas incluyen todas las piezas normalmente requeridas para proteger su inversión en máquinas Caterpillar. Los distribuidores pueden tener juegos de reparación o piezas remanufacturadas para permitir la selección de la mejor alternativa de reparación en un caso en particular. Al pedir piezas de repuesto, especifique en su pedido la cantidad, el número de pieza, el nombre de la pieza y el número de serie/número de identificación del producto, de la máquina para la cual se necesitan estas piezas.

## 3. ORGANIZACION DEL MANUAL DE PIEZAS

La información sobre el producto, se presenta en este manual, como "elementos de información" que representan todos los componentes de un modelo específico. Las configuraciones de motores y los grupos de asientos son ejemplos de elementos de información. Los elementos de información están organizados primeramente por nombres de piezas en orden alfabético y en segundo lugar, por el número de pieza dentro de cada sección principal del manual.

### 4. CONTENIDO

La página de Contenido se encuentra al principio del manual. El Contenido indica cada sección del manual con una lista completa de todos los elementos de información organizados en el orden que aparecen en el manual. Los números de página proporcionan una referencia rápida a las ilustraciones detalladas de identificación de piezas y a las listas de componentes de repuesto de dichas piezas.

### 5. ÍNDICE DE PIEZAS DE MANTENIMIENTO

Al principio de este catálogo se encuentra un índice de los números de piezas utilizadas más frecuentemente para el mantenimiento, que incluye descripción, cantidad necesaria, lugar de utilización y número de página. Esta información está organizada alfabéticamente, por descripción de la pieza.

### 6. ÍNDICE

El Índice, ubicado cerca del principio del manual, es una lista en orden alfabético de todos los elementos de información incluídos en el manual. Los números de página proporcionan una referencia rápida a las ilustraciones detalladas de identificación de piezas y a las listas de componentes de repuesto de dichas piezas.

### 7. INDICE NUMÉRICO DE PIEZAS

Un índice numérico de piezas con el correspondiente número de página aparece al final de este catálogo.

### 8. TÍTULOS

Los títulos ubicados al principio de cada elemento de información identifican el número y el nombre de la pieza junto con información descriptiva. Se debe usar información sobre los Números de Identificación de Pieza (PIN) y los números de serie (S/N) para seleccionar la información que corresponda a una máquina en particular. También se suministra información sobre las opciones de reparación en el campo, la identificación de componentes de accesorios optativos y el lugar de ubicación de la pieza ("es parte de").

La primera línea del título se muestra con un tipo de letra más grande para indicar el comienzo de un elemento de información. Si se requieren páginas adicionales para ilustrar un elemento de información, los títulos se muestran con un tipo de letra normal y la continuación se indica entre paréntesis.

### 9. PIEZAS QUE NO SE SUMINISTRAN COMO REPUESTO

En algunos casos es necesario indicar piezas que no se suministran como repuesto pero que pueden estar conectadas a listas de componentes de otras piezas de repuesto. En tal caso, dichas piezas se muestran en cursiva para indicar que no son piezas disponibles.

### 10. NÚMEROS DE REFERENCIA

Los números en la columna de No. de Referencia corresponden a los números indicados en la ilustración que pertenece a ese número de pieza. Los números que tienen un sufijo alfabético identifican artículos de las listas de componentes de piezas. Los números en la columna de Referencia de la ilustración se identifican en la esquina inferior izquierda de cada ilustración. Para determinar el número de pieza correcto se puede utilizar tanto el No. de Referencia de la ilustración como el No. de Referencia del artículo. A medida que se actualiza la información para indicar los más recientes números de piezas de repuesto, puede omitirse intencionalmente un No. de Referencia en una lista de componentes de piezas.

### 11. NOMBRES DE PIEZA SANGRADOS

Cuando el nombre de una pieza está sangrado en una lista, significa que esta pieza forma parte del grupo o conjunto del renglón inmediatamente superior.

### 12. LETRAS DE REFERENCIA DE ILUSTRACIONES

Las ilustraciones contienen algunas veces letras de referencia (A, B, C etc.) cuyo propósito es seguir el trayecto de líneas y mazos de cables de un punto a otro. También se utilizan para mostrar dónde volver a unir ilustraciones que se habían separado.

**13. ABREVIATURAS Y SIMBOLOS**

O.D. – Diámetro exterior
I.D. – Diámetro interior
A – No es pieza de este grupo
B – Utilizado según la demanda
C – Indica cambio
D – Se pide por metro
E – Se pide por centímetro
F – No se muestra
G – Se pide por pulgada
I – Ver "Hose Fabrication Guide"
M – Pieza métrica
R – Puede estar disponible como pieza remanufacturada
Y – Ilustración separada
Z – No se suministra por separado

SIS *Nueva Característica*

**14.<END>**

Este símbolo indica el final de un elemento de información.

**NOTA:**

**Las contínuas mejoras y adelantos en diseño podrían originar cambios a su máquina que no se incluyen en esta publicación. Cuando tenga alguna pregunta acerca de su producto Caterpillar o de esta publicación, consulte al distribuidor Caterpillar para obtener la información más reciente.**

## FRAME AND BODY

### 8E-3299 PLATFORM GP-CAB

PIN 38K1-99999

SMCS-7253 — 100090751

| NOTE | REF NO | GRAPHIC REF | PART NUMBER | QTY | PART NAME 1 2 3 4 5 6 (PRODUCT LEVEL) | SEE PAGE |
|---|---|---|---|---|---|---|
| | 1 | 1 | 3T-3963 | 1 | PLATE AS | |
| | 2 | 1 | 5M-3992 | 25 | BOLT (3/8-16X.750IN) | |
| | 3 | 1 | 6P-1075 | 41 | WASHER-HARD (3MM THK) | |
| | 4 | 1 | 9P-1444 | 2 | SUPPORT AS-FOOT | |
| | 5 | 1 | 9P-2229 | 19 | BOLT (1/2-13X1IN) | |
| | | 1 | 6P-[illegible]4 | 19 | WASHER-HARD (4MM THK) | |
| | 6 | 1 | 8E-8136 | 1 | COVER AS-LH | |
| | | 1 | 9P-2979 | 6 | NUT-WELD (3/8-16 THD) | |
| | | 1 | 1P-8198 | 1 | CLIP | |
| | 7 | 1 | 7S-3411 | 4 | COVER | |
| | 8 | 1 | 6J-0468 | 18 | SCREW-HEAD (3/8-16X.875IN) | |
| | 9 | 1 | [illegible]-4474 | 1 | COVER | |
| | | 1 | 8E-8917 | 1 | GASKET | |
| | 10 | 1 | 8E-3249 | 1 | [illegible] | |
| | | 1 | 8E-2290 | 1 | GASKET | |
| | 11 | 1 | 3T-3635 | 1 | HANDHOLD | |
| | 12 | 1 | 8E-8878 | 1 | COVER AS | |
| | | 1 | 9P-2979 | 8 | NUT-WELD (3/8-16 THD) | |
| | | 1 | 8E-8078 | 1 | GASKET | |
| | 13 | 1 | 7T-0131 | 1 | FLOORPLATE AS | |
| | | 1 | 1F-0748 | 4 | NUT-WELD (1/2-13 THD) | |
| | 14 | 1 | 7V-8087 | 1 | PLUG-BUTTON | |
| | 15 | 1 | 7T-0136 | 1 | PLATE AS | |
| | | 1 | 9P-2979 | 5 | NUT-WELD (3/8-16 THD) | |
| | 16 | 1 | 7T-8066 | 1 | COVER | |
| | | 1 | 7T-8779 | 1 | GASKET | |
| | 17 | 1 | 3T-3981 | 1 | PLATE AS | |
| | 18 | 1 | 8T-9364 | 4 | BOLT (1/4-20X.625IN) | |
| M | | 1 | 8T-4205 | 4 | WASHER-HARD (2MM THK) | |
| | 19 | 1 | 6X-8464 | 1 | FLOOR MAT | |
| | 20 | 1 | 8E-8846 | 1 | MODULE AS-OPERATOR | |
| | 21 | 1 | 3T-3634 | 1 | HANDHOLD | |
| | 22 | 1 | 9P-8571 | 2 | PLUG | |
| | 23 | 2 | 8T-9364 | 4 | BOLT (1/4-20X.625IN) | |
| M | | 2 | 8T-4205 | 4 | WASHER-HARD (2MM THK) | |
| | 24 | 2 | 5M-3062 | 17 | BOLT (3/8-16X.750IN) | |
| | 25 | 2 | 6P-1075 | 21 | WASHER-HARD (3MM THK) | |
| | 26 | 2 | 7T-0136 | 1 | SEAL | |
| | 27 | 2 | 7X-0376 | 2 | BOLT (3/4-10X5IN) | |
| | | 2 | 7X-0682 | 2 | WASHER-HARD (6MM THK) | |
| | 28 | 2 | 3T-3462 | 2 | PLATE | |
| | 29 | 2 | 3T-6290 | 1 | PLATE AS | |
| | | 2 | 7S-4628 | 8 | SPACER | |
| | 30 | 2 | 3T-6281 | 1 | SEAL | |
| | 31 | 2 | 7S-8917 | 1 | GASKET | |
| | 32 | 2 | 7S-8918 | 1 | COVER AS | |
| | | 2 | 2R-2376 | 2 | WASHER | |
| | | 2 | 6P-9628 | 2 | SCREW-KNURLED | |
| | 33 | 2 | 9W-3429 | 1 | COVER | |
| | 34 | 2 | 8E-8697 | 1 | COVER | |
| | 35 | 2 | 9D-3031 | 8 | SCREW-SOCKET HEAD | |
| | 36 | 2 | 9W-3142 | 8 | MOUNTING | |
| | 37 | 2 | 9W-9627 | 2 | PLATE | |
| | 38 | 2 | 7X-0380 | 2 | BOLT (7/8-9X5IN) | |
| | | 2 | 7X-0672 | 2 | WASHER-HARD | |
| | 39 | 2 | 4L-8454 | 4 | BOLT (3/8-16X1.0IN) | |
| | 40 | 2 | 3T-4788 | 1 | COVER | |

12 FRAME AND BODY — 1 of 4 — SELP4570-01

## FRAME AND BODY

### 8E-3299 PLATFORM GP-CAB (contd.)

100090751

| NOTE | REF NO | GRAPHIC REF | PART NUMBER | QTY | PART NAME 1 2 3 4 5 6 (PRODUCT LEVEL) | SEE PAGE |
|---|---|---|---|---|---|---|
| | 41 | 2 | 8E-2515 | 1 | COVER | |
| | 42 | 2 | 7T-0134 | 1 | PLATE | |
| | 43 | 2 | 7T-0138 | 1 | GASKET | |
| | 44 | 2 | 7S-8724 | 1 | GASKET | |
| | 45 | 2 | 7S-8723 | 1 | COVER | |
| | 46 | 2 | 6V-1960 | 2 | PLUG-BUTTON | |

M-METRIC PART

SELP4570-01 — 2 of 4 — FRAME AND BODY 13

## FRAME AND BODY

### 8E-3299 PLATFORM GP-CAB (contd.)

100090751

TOP VIEW

GRAPHIC #1 — g00036729

14 FRAME AND BODY — 3 of 4 — SELP4570-01

## FRAME AND BODY

### 8E-3299 PLATFORM GP-CAB (contd.)

100090751

SECTION A-A — VIEW D-D — SECTION G-G — SECTION B-B — VIEW E-E — SECTION H-H — SECTION C-C — SECTION F-F — SECTION J-J

GRAPHIC #2 — g00105874

SELP4570-01 — 4 of 4 — FRAME AND BODY 15

# INFORMAÇÃO GERAL

## 1. IDENTIFICAÇÃO DA MÁQUINA

As máquinas Caterpillar são identificadas pelos Números de Informação do Produto (PIN). Alguns componentes incluídos numa máquina podem ser identificados por Números de Série (S/N). Componentes típicos que serão enumerados com números de série incluem motores, transmissões, lâminas e ríperes. Além do número de série, a máquina e o motor são ainda identificados por números de arranjo e, em alguns casos, números de modificações. Tais números encontram-se na(s) placa(s) de identificação do produto e na placa mestre no compartimento do operador.

SIS ***Novidades***

A partir do primeiro trimestre de 2001 o Número de Identificação de Produto da Caterpillar (PIN) precisa ser mudado de 8 para 17 caracteres. Esforçando-se para fornecer uma identificação uniforme de equipamentos, a Caterpillar e outros fabricantes de equipamento de construção estão mudando para atender a versão mais atualizada do padrão de identificação de produtos. Os números de PIN para produtos de aplicações não rodoviárias são definidos pela ISO 10261. O novo formato de número PIN será adotado em todas as máquinas e grupos geradores Caterpillar. As placas e as marcações do chassi mostrarão os 17 dígitos de PIN. O novo formato terá a seguinte disposição:

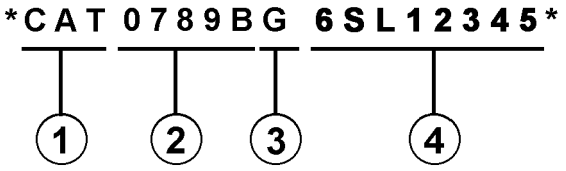


Onde:

1. Código de Fabricação Mundial da Caterpillar (dígitos 1-3)

2. Descrição da Máquina (dígitos 4-8)

3. Dígito de Verificação (dígito 9)

4. Seção de Indicador da Máquina (MIS) ou Número de Seqüência de Produto (dígitos 10-17). Estes eram anteriormente chamados de Número de Série.

Máquinas e grupos geradores produzidos antes do primeiro trimestre de 2001 manterão o formato de 8 caracteres de PIN.

Componentes como motores, transmissões, eixos, ferramentas de trabalho, etc. continuarão a usar Número de Série (S/N) com oito caracteres.

## 2. COMO OBTER PEÇAS

**⚠ CUIDADO**

**Quando peças de substituição são exigidas para este produto, a Caterpillar recomenda a utilização de peças de substituição Caterpillar ou peças com as especificações equivalentes incluindo, mas não limitadas, à dimensões físicas, tipos, resistência e materiais.**

**A inobservância desta advertência poderá resultar em falhas prematuras, danos ao produto, ferimentos ou morte.**

As Peças de Reposição de Qualidade Caterpillar encontram-se disponíveis nos revendedores Caterpillar no mundo inteiro. Seus estoques de peças são atualizados e incluem todas as peças normalmente necessárias para proteger seu investimento em máquinas Caterpillar. Alguns revendedores podem oferecer jogos de reparo ou peças de troca/remanufaturadas disponíveis como uma opção da alternativa de reparo mais eficaz para uma situação específica. Ao encomendar peças, seu pedido deve especificar a quantidade, o número e o nome da peça e o número de série/número de identificação do produto referentes à máquina para a qual as peças se destinam.

## 3. ORGANIZAÇÃO DO MANUAL DE PEÇAS

A informação do produto neste manual é apresentada em forma de "elementos de informação" que representam todos os componentes para o modelo específico. Arranjo de Motor e Grupo de Assento são exemplos de elementos de informação. Os elementos de informação são organizados em ordem alfabética por nome de peça ou secundariamente, por número de peça incluído em cada seção principal do manual.

## 4. LISTA DE CONTEÚDOS

A Lista de Conteúdos (TOC) se encontra no princípio do manual. A Lista de Conteúdos (TOC) relaciona em cada seção do manual uma lista completa com todos os elementos de informação organizados conforme aparecem no manual. Números de página são fornecidos para que se tenha referência rápida de ilustrações de peças detalhadas e listas de conteúdos que podem receber serviço de manutenção.

### 5. ÍNDICE DE PEÇAS DE MANUTENÇÃO

O Índice de Peças de Manutenção, localizado perto do princípio do manual, faz referência aos números de peça de manutenção usados com maior frequência, fornecendo uma descrição, a quantidade, o uso e o número de página. Esta informação é organizada com a descrição da peça em ordem alfabética.

### 6. ÍNDICE

O Índice localizado perto do princípio do manual, consiste de uma lista em ordem alfabética de todos os elementos de informação incluídos no manual. Números de página são fornecidos para que se tenha referência rápida de ilustrações de peças detalhadas e listas de conteúdos que podem receber serviço de manutenção.

### 7. ÍNDICE DE NÚMERO DE PEÇA

Um índice numérico relacionando todos os números de peça e a(s) página(s) correspondentes, aparece no final do manual.

### 8. LEGENDAS

As legendas localizadas no início de cada elemento de informação identificam o número e o nome de peça, juntamente com informação descritiva adicional. Informações sobre o Número de Informação do Produto (PIN) e o Número de Série (S/N) encontradas em cada legenda devem ser usadas para selecionar a informação correta sobre uma máquina específica. Opções de substituição no campo, identificação de componentes de acessórios opcionais e informações sobre onde são utilizados ("parte de") são também fornecidas.

A primeira linha de uma legenda é indicada em tipo maior para indicar o princípio de um elemento de informação. Legendas para páginas adicionais que podem ser necessárias para ilustrar um elemento de informação serão apresentadas em tipo padrão e incluirão o termo *(continua)* .

### 9. NÃO DISPONÍVEL SEPARADAMENTE

Em alguns casos, é necessário mostrar peças não disponíveis separadamente que têm uma ligação com listas de conteúdos de nível inferior que podem receber serviço de manutenção. Os números de peça destes componentes não disponíveis aparecerão em *itálico* , a fim de indicar que não estão disponíveis.

### 10. NÙMEROS DE REFERÊNCIA À LISTA DE PEÇAS

Os números indicados na coluna Ref No (No. de Referência) correspondem-se aos números usados no(s) gráfico(s) correspondente(s). Um sufixo com letras pode ser acrescentado a um número de referência para identificar itens de conteúdo de nível inferior. Os números indicados na coluna Graphic Ref (Referência de Gráfico) referem-se ao identificador de número de gráfico presente no canto esquerdo inferior de cada ilustração. O número de Referência de Gráfico pode ser usado em combinação com o item Ref No para determinar-se o número de peça correto. Poderá haver omissão intencional de um número de referência (Ref No) de uma lista de conteúdos uma vez que as informações são atualizadas para refletir os números de peça mais recentes que podem receber serviço de manutenção.

### 11. NOMES DE PEÇAS DESALINHADOS

Quando um nome de peça encontra-se desalinhado numa lista de peças, significa que tal item faz parte do (está incluído no) grupo ou conjunto sob o qual está relacionado.

### 12. LETRAS DE REFERÊNCIA NAS ILUSTRAÇÕES

Quando necessário, as ilustrações contêm letras de referência (A, B, C, etc.) que são utilizadas para seguir tubulações e cabos elétricos de um ponto a outro. Também foram utilizadas para indicar onde se pode reconectar as ilustrações que foram separadas.

### 13. ABREVIAÇÕES E SÍMBOLOS

O.D. – "Outside Diameter" (Diâmetro Externo)
I.D. – "Inside Diameter" (Diâmetro Interno)
A – Não faz parte deste grupo
B – Use conforme necessário
C – Indica modificação
D – Vendido por metro
E – Vendido por centímetro
F – Não ilustrado
G – Vendido por polegada
I – Consulte o seu revendedor quanto a mangueira
M – Peça métrica
R – Peça remanufaturada pode estar disponível; consulte o seu revendedor Cat
Y – Ilustração separada
Z – Não disponível separadamente

SIS ***Novidades***

### 14. <END>

Este símbolo indica o final de um elemento de informação.

**NOTA:**

**Os contínuos aperfeiçoamentos e avanços no projeto do produto podem ocasionar modificações em sua máquina que talvez ainda não estejam incluídas nesta publicação. Sempre que surgirem dúvidas quanto a um produto Caterpillar ou quanto à presente publicação, consulte o seu revendedor Caterpillar para obter as informações mais recentes disponíveis**.

## FRAME AND BODY

### 8E-3299 PLATFORM GP-CAB

PIN 38K1-99999

SMCS-7253 — 100090751

| NOTE | REF NO | GRAPHIC REF | PART NUMBER | QTY | PART NAME 1 2 3 4 5 6 (PRODUCT LEVEL) | SEE PAGE |
|---|---|---|---|---|---|---|
| | 1 | 1 | 3T-3963 | 1 | PLATE AS | |
| | 2 | 1 | 6M-3992 | 25 | BOLT (3/8-16X.750IN) | |
| | 3 | 1 | 6P-1075 | 41 | WASHER-HARD (3MM THK) | |
| | 4 | 1 | 9P-1444 | 2 | SUPPORT AS-FOOT | |
| | 5 | 1 | 9P-2229 | 19 | BOLT (1/2-13X1IN) | |
| | | 1 | [illegible] | 19 | WASHER-HARD (4MM THK) | |
| | 6 | 1 | 8E-8136 | 1 | COVER AS-LH | |
| | | 1 | 9P-2979 | 6 | NUT-WELD (3/8-16 THD) | |
| | | 1 | 1P-8198 | 1 | CLIP | |
| | 7 | 1 | 7E-3411 | 4 | COVER | |
| | 8 | 1 | 6J-0468 | 18 | SCREW-HEAD (3/8-16X.875IN) | |
| | 9 | 1 | [illegible]-4474 | 1 | COVER | |
| | | 1 | 8E-8917 | 1 | GASKET | |
| | 10 | 1 | 8E-3249 | 1 | [illegible] | |
| | | 1 | 8E-2290 | 1 | GASKET | |
| | 11 | 1 | 3T-3635 | 1 | HANDHOLD | |
| | 12 | 1 | 8E-8878 | 1 | COVER AS | |
| | | 1 | 9P-2979 | 8 | NUT-WELD (3/8-16 THD) | |
| | | 1 | 8E-8878 | 1 | GASKET | |
| | 13 | 1 | 7T-0131 | 1 | FLOORPLATE AS | |
| | | 1 | 1F-0748 | 4 | NUT-WELD (1/2-13 THD) | |
| | 14 | 1 | 7V-8087 | 1 | PLUG-BUTTON | |
| | 15 | 1 | 7T-0136 | 1 | PLATE AS | |
| | | 1 | 9P-2979 | 5 | NUT-WELD (3/8-16 THD) | |
| | 16 | 1 | 7T-8066 | 1 | COVER | |
| | | 1 | 7T-8779 | 1 | GASKET | |
| | 17 | 1 | 3T-3981 | 1 | PLATE AS | |
| | 18 | 1 | 6T-9364 | 4 | BOLT (1/4-20X.625IN) | |
| M | | 1 | 6T-4205 | 4 | WASHER-HARD (2MM THK) | |
| | 19 | 1 | 6X-8464 | 1 | FLOOR MAT | |
| | 20 | 1 | 8E-8846 | 1 | MODULE AS-OPERATOR | |
| | 21 | 1 | 3T-3634 | 1 | HANDHOLD | |
| | 22 | 1 | 9P-8571 | 2 | PLUG | |
| | 23 | 2 | 6T-9364 | 4 | BOLT (1/4-20X.625IN) | |
| M | | 2 | 6T-4205 | 4 | WASHER-HARD (2MM THK) | |
| | 24 | 2 | 6M-3062 | 17 | BOLT (3/8-16X.750IN) | |
| | 25 | 2 | 6P-1075 | 21 | WASHER-HARD (3MM THK) | |
| | 26 | 2 | 7T-0136 | 1 | SEAL | |
| | 27 | 2 | 7X-0376 | 2 | BOLT (3/4-10X5IN) | |
| | | 2 | 7X-0682 | 2 | WASHER-HARD (6MM THK) | |
| | 28 | 2 | 3T-3462 | 2 | PLATE | |
| | 29 | 2 | 3T-6290 | 1 | PLATE AS | |
| | | 2 | 7E-4628 | 8 | SPACER | |
| | 30 | 2 | 3T-6281 | 1 | SEAL | |
| | 31 | 2 | 7E-8817 | 1 | GASKET | |
| | 32 | 2 | 7E-8816 | 1 | COVER AS | |
| | | 2 | 2R-2376 | 2 | WASHER | |
| | | 2 | 6P-9628 | 2 | SCREW-KNURLED | |
| | 33 | 2 | 9W-3429 | 1 | COVER | |
| | 34 | 2 | 8E-8697 | 1 | COVER | |
| | 35 | 2 | 6D-3031 | 8 | SCREW-SOCKET HEAD | |
| | 36 | 2 | 9W-3142 | 8 | MOUNTING | |
| | 37 | 2 | 9W-9627 | 2 | PLATE | |
| | 38 | 2 | 7X-0380 | 2 | BOLT (7/8-9X5IN) | |
| | | 2 | 7X-0672 | 2 | WASHER-HARD | |
| | 39 | 2 | 4L-8454 | 4 | BOLT (3/8-16X1.0IN) | |
| | 40 | 2 | 3T-4788 | 1 | COVER | |

12 FRAME AND BODY — 1 of 4 — SELP4570-01

## FRAME AND BODY

### 8E-3299 PLATFORM GP-CAB (contd.)

100090751

| NOTE | REF NO | GRAPHIC REF | PART NUMBER | QTY | PART NAME 1 2 3 4 5 6 (PRODUCT LEVEL) | SEE PAGE |
|---|---|---|---|---|---|---|
| | 41 | 2 | 8E-2515 | 1 | COVER | |
| | 42 | 2 | 7T-0134 | 1 | PLATE | |
| | 43 | 2 | 7T-0138 | 1 | GASKET | |
| | 44 | 2 | 7E-8724 | 1 | GASKET | |
| | 45 | 2 | 7E-8723 | 1 | COVER | |
| | 46 | 2 | 6V-1960 | 2 | PLUG-BUTTON | |

M-METRIC PART

SELP4570-01 — 2 of 4 — FRAME AND BODY 13

## FRAME AND BODY

### 8E-3299 PLATFORM GP-CAB (contd.)

100090751

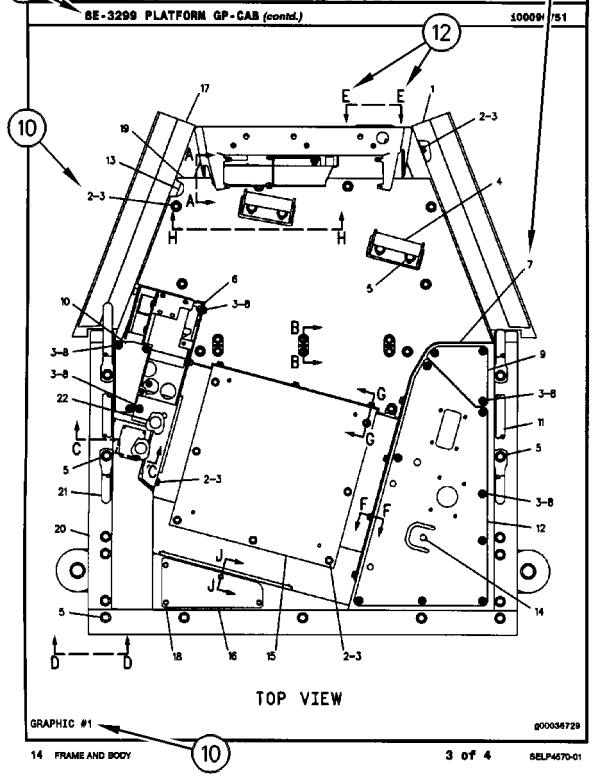


14 FRAME AND BODY — 3 of 4 — SELP4570-01

## FRAME AND BODY

### 8E-3299 PLATFORM GP-CAB (contd.)

100090751

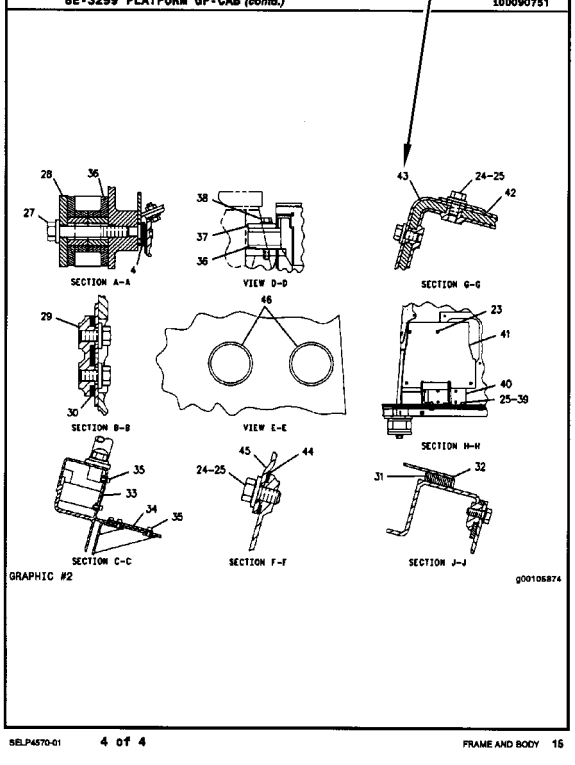


SELP4570-01 — 4 of 4 — FRAME AND BODY 15

# ALLGEMEINE HINWEISE

## 1. MASCHINENKENNZEICHNUNG

Caterpillar-Maschinen sind mit PRODUCT IDENTIFICATION NUMBERS (PIN) (Produkt-Identnummern) gekennzeichnet. Einige Baugruppen, z.B. Motoren, Getriebe, Planierschilde und Aufreißer, sind mit SERIAL NUMBERS (S/N) (Seriennummern) gekennzeichnet. An der Maschine und am Motor befinden sich außerdem ARRANGEMENT NUMBERS (Ausrüstungsnummern) sowie in einigen Fällen MODIFICATION NUMBERS (Änderungsnummern). Sie befinden sich auf den PIN-Schildern und auf dem Typenschild im Fahrerhaus.

Bei Ersatzteilbestellungen müssen dem Händler alle diese Nummern zur Verfügung gestellt werden.

SIS ***Neu im Parts Manual***

Vom ersten Quartal 2001 ab wurde die Caterpillar Produkt-Identnummer (PIN) von 8 auf 17 Zeichen geändert. Um zur Standardisierung der Produkt-Identnummer beizutragen, sind Caterpillar und andere Baumaschinenhersteller bestrebt, die aktuellste Norm zur Produkt-Identnummerierung einzuführen. Produkt-Identnummern für Baumaschinen sind durch ISO 10261 definiert. Das neue Format der Produkt-Identnummern gilt für alle Caterpillar-Maschinen und -Stromaggregate. Die Produkt-Identschilder und -Identrahmenmarkierung enthalten die aus 17 Zeichen bestehende Identnummer. Das neue Format hat folgende Abschnitte:

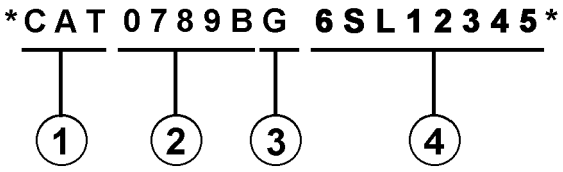


Abschnitte:

1. Caterpillars weltweiter Herstellungscode (Zeichen 1-3)

2. Modell (Zeichen 4-8)

3. Kontrollzeichen (Zeichen 9)

4. Maschinenspezifische Kennung (MIS) oder Produktsequenznummer (Zeichen 10-17). Diese wurde früher als Seriennummer bezeichnet.

Für vor dem ersten Quartal 2001 hergestellte Maschinen und Stromaggregate wird das aus 8 Zeichen bestehende PIN-Format beibehalten.

Bauteile wie z.B. Motoren, Getriebe, Achsen sowie Arbeitsgeräte werden weiterhin eine aus 8 Zeichen bestehende Seriennummer (S/N) aufweisen.

## 2. BESTELLEN VON ERSATZTEILEN

**⚠ WARNUNG**

**Wenn für diese Maschine Ersatzteile benötigt werden, empfiehlt Caterpillar, ausschließlich Caterpillar-Ersatzteile oder solche zu verwenden, die die gleichen technischen Merkmale hinsichtlich Typ, Festigkeit, Werkzeugeigenschaften und die gleichen Maße aufweisen.**

**Bei Nichtbeachtung dieser Warnung besteht Verletzungs- oder sogar Lebensgefahr! Ferner kann Nichtbeachtung vorzeitige Ausfälle der Teile und Beschädigung der Maschine zur Folge haben.**

Original Caterpillar-Ersatzteile können weltweit bei jedem Caterpillar-Händlern bestellt werden. Die umfangreichen Händlerlager enthalten normalerweise alle Teile, die Sie für Ihre Caterpillar-Maschine benötigen. Einige Händler bieten Reparatursätze, Austausch- oder werküberholte Teile an, so daß Sie eine Auswahl unter verschiedenen Reparaturmöglichkeiten treffen können. Ihre Bestellung muß folgende Angaben enthalten: Anzahl der benötigten Teile, Bestellnummer, Bezeichnung des Teils, Serien-Nr./Produkt-Ident-Nr., Ausrüstungs-Nr. und Änderungs-Nr. der Maschine, für die diese Teile benötigt werden.

## 3. AUFBAU DES PARTS MANUAL

Die Produktinformationen für alle Komponenten eines bestimmten Modells sind in INFORMATION ELEMENTS (Informationseinheiten) gegliedert. ENGINE ARRANGEMENT (Motorausführung) und SEAT GROUP (Fahrersitz) sind Beispiele für solche Informationseinheiten. Sie sind innerhalb jeder Gruppe alphabetisch, entsprechend der Ersatzteilbezeichnung, und zusätzlich numerisch, entsprechend der Ersatzteilnummer, geordnet.

## 4. INHALTSVERZEICHNIS

Das Inhaltsverzeichnis befindet sich am Anfang des Buches. Im Inhaltsverzeichnis werden die einzelnen Abschnitte des Buches aufgeführt. Die Abschnitte enthalten eine vollständige Aufstellung aller Informationseinheiten. Diese sind entsprechend ihrem Erscheinen im Buch geordnet. Das Inhaltsverzeichnis enthält Seitenangaben für Schnellverweise auf detaillierte Abbildungen und Teillisten.

### 5. INDEX FÜR WARTUNGSTEILE

Der Index für Wartungsteile vorn im Buch enthält die Bestellnummern, Seitenangaben, Mengenangaben und Informationen über den Einsatzbereich für die am häufigsten benötigten Ersatzteile. Die Angaben sind alphabetisch entsprechend der Teilebezeichnung geordnet.

### 6. INDEX

Der Index vorn im Buch enthält eine alphabetische Liste aller Informationseinheiten. Er enthält Seitenangaben für Schnellverweise auf detaillierte Abbildungen und Teillisten.

### 7. INDEX FÜR BESTELLNUMMERN

Hinten im Buch befindet sich ein numerischer Index, mit allen Bestellnummern und dem Hinweis auf die Seite, auf der sich die betreffende Abbildung befindet.

### 8. ÜBERSCHRIFTEN

Die Überschriften, die sich am Anfang jeder der Informationseinheiten befinden, enthalten Bestellnummern, Ersatzteilbezeichnungen und zusätzliche beschreibende Informationen. Produkt-Ident- und Seriennummern in den Überschriften sollten zur Auswahl der richtigen Informationen für die betreffende Maschine verwendet werden. Die Überschriften enthalten außerdem Informationen über möglichen Außendienstersatz, mögliche Baugerätekomponenten und die Baugruppe, zu der das Teil gehört.

Die erste Zeile einer Überschrift erscheint in einer größeren Schriftart, um den Anfang einer Informationseinheit zu kennzeichnen. Überschriften für zusätzliche Seiten, die zur Erläuterung einer Informationseinheit notwendig sind, erscheinen in normaler Schriftart und enthalten den Begriff "(contd.)".

### 9. NICHT EINZELN LIEFERBARE TEILE

In einigen Fällen ist es notwendig nicht lieferbare Teile, die selbst mit einer eigenen Teilliste im Buch vertreten sind, aufzuführen. Die Bestellnummern dieser nicht einzeln lieferbaren Teile erscheinen kursiv, wodurch angezeigt wird, daß sie nur in Verbindung mit anderen Teilen lieferbar sind.

### 10. REFERENZNUMMER FÜR ERSATZTEILE

Die Zahlen, die in der Spalte "Ref No" aufgeführt sind, stimmen mit den Zahlen in den beigefügten Abbildungen überein. Ein Buchstaben-Suffix kann zu einer Referenznummer hinzugefügt werden, um zu kennzeichnen, daß das Teil mit einer eigenen Teilliste im Buch aufgeführt ist. Die in der Spalte "Graphic Ref" angeführten Zahlen verweisen auf die Identifikationsnummer der Abbildung, die sich in der linken unteren Ecke der Abbildung befindet. Diese Nummer kann zusammen mit der Referenznummer des Teils angegeben werden, um die richtige Ersatzteilnummer zu ermitteln. Referenznummern können absichtlich weggelassen werden, da die Nummern der lieferbaren Ersatzteile ständig aktualisiert werden.

### 11. EINGERÜCKTE BEZEICHNUNGEN

Wenn eine Bezeichnung eingerückt ist, wird dadurch angezeigt, daß das Teil zu einer Baugruppe gehört, unter deren Bezeichnung es eingerückt ist.

### 12. REFERENZBUCHSTABEN

Falls erforderlich sind in den Abbildungen Referenzbuchstaben enthalten (z.B. A, B, C, usw.), die Leitungen und Kabelbäume von einem Punkt zum anderen verfolgen. Außerdem geben sie die Stelle an, an der getrennte Abbildungen fortgesetzt werden.

### 13. ABKÜRZUNGEN UND SYMBOLE

O.D. – Außendurchmesser
I.D. – Innendurchmesser
A – kein Teil dieser Gruppe
B – nach Bedarf verwenden
C – Hinweis auf eine Änderung
D – in Meter-Länge bestellen
E – in Zentimeter-Länge bestellen
F – nicht gezeigt
G – in Zoll-Länge bestellen
I – siehe "Hose Fabrication Guide"
M – metrisches Teil
R – werküberholtes Teil unter Umständen lieferbar
Y – separate Abbildung
Z – nicht einzeln lieferbar

SIS *Neu im Parts Manual*

### 14. <END>

Dieses Symbol zeigt das Ende eines Informationselements an.

# ALLGEMEINE HINWEISE

**ANMERKUNG:**

**Ständig vorgenommene Verbesserungen und Weiterentwicklungen an Ihrer Maschine können Änderungen verursachen, die in der vorliegenden Ausgabe noch nicht berücksichtigt sind. Fragen zu Ihrer Caterpillar-Maschine oder diesem Ersatzteilbuch beantwortet Ihr Caterpillar-Händler.**

## FRAME AND BODY

### 8E-3299 PLATFORM GP-CAB

PIN 38K1-99999

SMCS-7253 — 100090751

| NOTE | REF NO | GRAPHIC REF | PART NUMBER | QTY | PART NAME 1 2 3 4 5 6 (PRODUCT LEVEL) | SEE PAGE |
|---|---|---|---|---|---|---|
| | 1 | 1 | 3T-3963 | 1 | PLATE AS | |
| | 2 | 1 | 5H-3992 | 25 | BOLT (3/8-16X.750IN) | |
| | 3 | 1 | 6P-1075 | 41 | WASHER-HARD (38MM THK) | |
| | 4 | 1 | 9P-1444 | 2 | SUPPORT AS-FOOT | |
| | 5 | 1 | [illegible]P-2229 | 19 | BOLT (1/2-13X1IN) | |
| | | 1 | [illegible]-[illegible]4 | 19 | WASHER-HARD (41MM THK) | |
| | 6 | 1 | 8E-8136 | 1 | COVER AS-LH | |
| | | 1 | 9F-2979 | 6 | NUT-WELD (3/8-16 THD) | |
| | | 1 | 1P-8198 | 1 | CLIP | |
| | 7 | 1 | 7E-3411 | 4 | COVER | |
| | 8 | 1 | 6J-0468 | 18 | SCREW-HEAD (3/8-16X.875IN) | |
| | 9 | 1 | [illegible]-4474 | 1 | COVER | |
| | | 1 | 8E-8917 | 1 | GASKET | |
| | 10 | 1 | 8E-3249 | 1 | [illegible] | |
| | | 1 | 8E-2290 | 1 | GASKET | |
| | 11 | 1 | 3T-3635 | 1 | HANDHOLD | |
| | 12 | 1 | 8E-8878 | 1 | COVER AS | |
| | | 1 | 9F-2979 | 8 | NUT-WELD (3/8-16 THD) | |
| | | 1 | 8E-8878 | 1 | GASKET | |
| | 13 | 1 | 7T-0131 | 1 | FLOORPLATE AS | |
| | | 1 | 1F-0748 | 4 | NUT-WELD (1/2-13 THD) | |
| | 14 | 1 | 7V-8087 | 1 | PLUG-BUTTON | |
| | 15 | 1 | 7T-0136 | 1 | PLATE AS | |
| | | 1 | 9F-2979 | 5 | NUT-WELD (3/8-16 THD) | |
| | 16 | 1 | 7T-8066 | 1 | COVER | |
| | | 1 | 7T-8779 | 1 | GASKET | |
| | 17 | 1 | 3T-3981 | 1 | PLATE AS | |
| | 18 | 1 | 8T-9364 | 4 | BOLT (1/4-20X.625IN) | |
| M | | 1 | 8T-4205 | 4 | WASHER-HARD (28MM THK) | |
| | 19 | 1 | 6X-8464 | 1 | FLOOR MAT | |
| | 20 | 1 | 8E-8846 | 1 | MODULE AS-OPERATOR | |
| | 21 | 1 | 3T-3634 | 1 | HANDHOLD | |
| | 22 | 1 | 9P-8571 | 2 | PLUG | |
| | 23 | 2 | 8T-9364 | 4 | BOLT (1/4-20X.625IN) | |
| M | | 2 | 8T-4205 | 4 | WASHER-HARD (28MM THK) | |
| | 24 | 2 | 5H-3062 | 17 | BOLT (3/8-16X.750IN) | |
| | 25 | 2 | 6P-1075 | 21 | WASHER-HARD (38MM THK) | |
| | 26 | 2 | 7T-0136 | 1 | SEAL | |
| | 27 | 2 | 7X-0376 | 2 | BOLT (3/4-10X5IN) | |
| | | 2 | 7X-0682 | 2 | WASHER-HARD (64MM THK) | |
| | 28 | 2 | 3T-3462 | 2 | PLATE | |
| | 29 | 2 | 3T-6290 | 1 | PLATE AS | |
| | | 2 | 7H-4628 | 8 | SPACER | |
| | 30 | 2 | 3T-6281 | 1 | SEAL | |
| | 31 | 2 | 7H-8817 | 1 | GASKET | |
| | 32 | 2 | 7H-8816 | 1 | COVER AS | |
| | | 2 | 2R-2376 | 2 | WASHER | |
| | | 2 | 6P-9628 | 2 | SCREW-KNURLED | |
| | 33 | 2 | 9W-3429 | 1 | COVER | |
| | 34 | 2 | 8E-8697 | 1 | COVER | |
| | 35 | 2 | 9D-3031 | 8 | SCREW-SOCKET HEAD | |
| | 36 | 2 | 9W-3142 | 8 | MOUNTING | |
| | 37 | 2 | 9W-9627 | 2 | PLATE | |
| | 38 | 2 | 7X-0380 | 2 | BOLT (7/8-9X5IN) | |
| | | 2 | 7X-0672 | 2 | WASHER-HARD | |
| | 39 | 2 | 4L-8454 | 4 | BOLT (3/8-16X1.0IN) | |
| | 40 | 2 | 3T-4788 | 1 | COVER | |

12 FRAME AND BODY — 1 of 4 — SELP4570-01

## FRAME AND BODY

### 8E-3299 PLATFORM GP-CAB (contd.)

100090751

| NOTE | REF NO | GRAPHIC REF | PART NUMBER | QTY | PART NAME 1 2 3 4 5 6 (PRODUCT LEVEL) | SEE PAGE |
|---|---|---|---|---|---|---|
| | 41 | 2 | 8E-2515 | 1 | COVER | |
| | 42 | 2 | 7T-0134 | 1 | PLATE | |
| | 43 | 2 | 7T-0138 | 1 | GASKET | |
| | 44 | 2 | 7H-8724 | 1 | GASKET | |
| | 45 | 2 | 7H-8723 | 1 | COVER | |
| | 46 | 2 | 6V-1960 | 2 | PLUG-BUTTON | |

M-METRIC PART

SELP4570-01 — 2 of 4 — FRAME AND BODY 13

## FRAME AND BODY

### 8E-3299 PLATFORM GP-CAB (contd.)

100090751

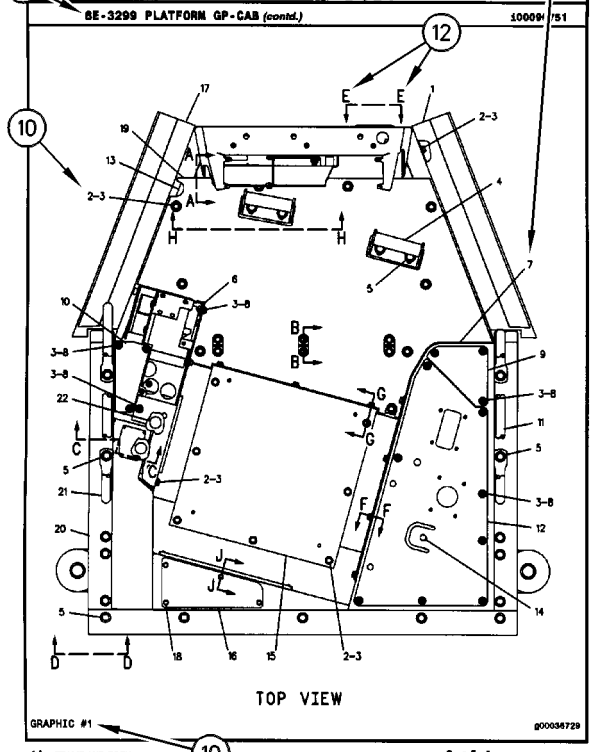


GRAPHIC #1 — g00036729

14 FRAME AND BODY — 3 of 4 — SELP4570-01

## FRAME AND BODY

### 8E-3299 PLATFORM GP-CAB (contd.)

100090751

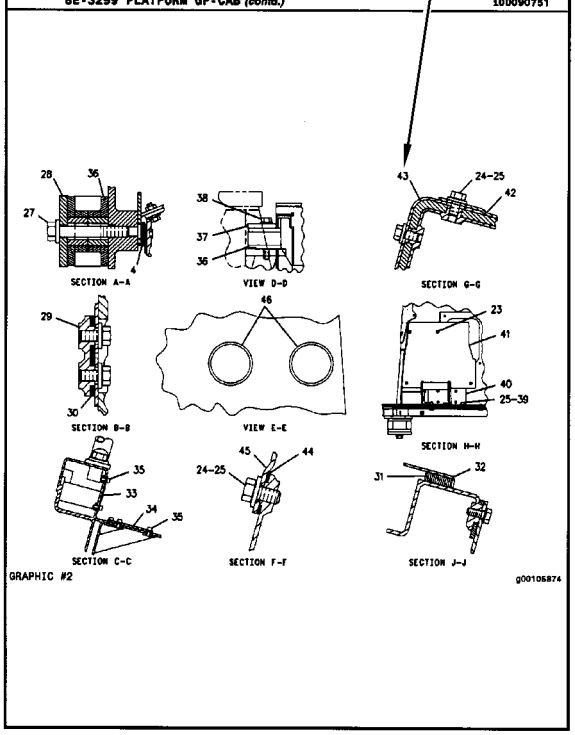


GRAPHIC #2 — g00105874

SELP4570-01 — 4 of 4 — FRAME AND BODY 15

## REMANUFACTURED COMPONENTS

As an option when making repairs consider Caterpillar Remanufactured Components. Components that are available through the Caterpillar Remanufactured Program are identified three ways in the parts book:

- with the letter R in the note field of the parts list
- with an R* at the beginning of the first line of the caption
- with an *R at the end of the first line of the caption

Typical components included in the Remanufacturing Program include:

ALTERNATORS
CONNECTING RODS
CRANKSHAFTS - UNDERSIZE
CRANKSHAFTS - UPGRADE TO NEW
CYLINDER HEADS
ELECTRONIC CONTROL MODULES (ECM)
ELECTRONIC SENSORS
FUEL INJECTORS
FUEL NOZZLES
FUEL PUMPS
GOVERNORS
OIL PUMPS
PISTONS
SHORT BLOCKS
STARTERS
TURBOCHARGERS - COMPLETE
TURBOCHARGER CARTRIDGES
WATER PUMPS

Caterpillar Remanufactured engines for many engine arrangements are also available.

## COMPOSANTS RÉNOVÉS

Comme option de réparation, considérer les composants rénovés Caterpillar. Les composants disponibles dans le cadre du programme Caterpillar de composants rénovés sont identifiés de trois façons dans le catalogue de pièces:

- avec la lettre "R" dans l'espace note de la liste des pièces
- avec R* au début de la première ligne des légendes
- avec *R à la fin de la première ligne des légendes

Les composants suivants figurent parmi les composants typiques du programme de rénovation:

ALTERNATEURS
BIELLES
VILEBREQUINS - SOUS-DIMENSIONNÉS
VILEBREQUINS - REMIS À NEUF
CULASSES
MODULES DE COMMANDE ÉLECTRONIQUE (ECM)
CAPTEURS ÉLECTRONIQUES
INJECTEURS
TÊTES D'INJECTEURS
POMPES À CARBURANT
RÉGULATEURS
POMPES À HUILE
PISTONS
BLOCS EMBIELLÉS
DÉMARREURS
TURBOCOMPRESSEURS - COMPLETS
CARTOUCHES DE TURBOCOMPRESSEUR
POMPES À EAU

Des moteurs rénovés sont aussi disponibles pour plusieurs versions de moteur.

**COMPONENTES REMANUFACTURADOS**

Al hacer reparaciones, tenga en cuenta la opción de Componentes Remanufacturados Caterpillar. Los componentes que están disponibles por medio del programa de Productos Remanufacturados Caterpillar se identifican de tres maneras en el manual de piezas:

- con la letra R en el espacio de Nota de la lista de piezas
- con una R* al comienzo de la primera línea de la leyenda
- con una *R al final de la primera línea de la leyenda

Los componentes que se incluyen típicamente en el Programa de Productos Remanufacturados son:

ALTERNADORES
BIELAS
CIGÜEÑALES - BAJOMEDIDA
CIGÜEÑALES - REMANUFACTURADOS A NUEVO
CULATAS
MÓDULOS DE CONTROL ELECTRÓNICO (ECM)
SENSORES ELECTRONICOS
INYECTORES
BOQUILLAS
BOMBAS DE COMBUSTIBLE
REGULADORES
BOMBAS DE ACEITE
PISTONES
MONOBLOQUES
MOTORES DE ARRANQUE
TURBOCOMPRESORES - COMPLETOS
NÚCLEOS DE TURBOCOMPRESOR
BOMBAS DE AGUA

También hay disponibles motores Remanufacturados Caterpillar para muchas de las configuraciones de motores.

**COMPONENTES REMANUFATURADOS**

Considere o uso de Componentes Remanufaturados Caterpillar ao efetuar reparos. Os componentes disponíveis através do Programa de Remanufatura Caterpillar são identificados de três formas no manual de peças:

- com um R na área da nota da lista de peças
- com um R* no princípio da primeira linha da legenda
- com um *R no final da primeira linha da legenda

Os componentes típicos que constam no Programa de Remanufatura incluem:

ALTERNADORES
BIELAS
VIRABREQUINS - SUBMEDIDAS
VIRABREQUINS - ATUALIZAÇÃO
CABEÇOTES
MÓDULOS DE CONTROLE ELETRÔNICO (ECM)
SENSORES ELETRÔNICOS
INJETORES DE COMBUSTÍVEL
BICOS DE ABASTECIMENTO DE COMBUSTÍVEL
BOMBAS DE COMBUSTÍVEL
GOVERNADORES
BOMBAS DE ÓLEO
PISTÕES
BLOCOS BÁSICOS DO MOTOR
MOTORES DE PARTIDA
TURBOALIMENTADORES - COMPLETOS
CARTUCHOS DE TURBOALIMENTADORES
BOMBAS D'ÁGUA

Motores Remanufaturados Caterpillar também encontram-se disponíveis para diversos arranjos de motor.

## WERKÜBERHOLTE AT-PRODUKTE

Bei Reparaturen sollten werküberholte AT-Produkte von Caterpillar in Betracht gezogen werden. Die durch das AT-Programm von Caterpillar erhältlichen Teile sind im Parts Book auf drei verschiedene Arten gekennzeichnet:

- mit dem Buchstaben R in der Spalte NOTE der Ersatzteilliste
- mit einem R* am Anfang der ersten Zeile der Überschrift
- mit einem *R am Ende der ersten Zeile der Überschrift

Das AT-Programm umfaßt u.a. folgende Produkte:

DREHSTROMGENERATOREN
PLEUELSTANGEN
KURBELWELLEN - MIT UNTERMASS
KURBELWELLEN - MIT ORIGINALMASS
ZYLINDERKÖPFE
ELEKTRONISCHE STEUEREINHEITEN (EMC)
ELEKTRONISCHE SENSOREN
PUMPENDÜSEN
EINSPRITZDÜSEN
KRAFTSTOFFPUMPEN
DREHZAHLREGLER
ÖLPUMPEN
KOLBEN
TEILMOTOREN
ANLASSER
TURBOLADER - KOMPLETT
TURBOLADERLAUFZEUGE
KÜHLWASSERPUMPEN

Viele Motoren können durch werküberholte AT-Motoren von Caterpillar ersetzt werden.

# SUPPLEMENTAL COOLANT ADDITIVES

**CUSTOMER BENEFITS:**

Protects against cavitation, foam, erosion, corrosion, and scale buildup in cooling systems.

- Provides measured coolant conditioner.

**DESCRIPTION:**

Additives deplete from the coolant with normal operation. For this reason, Supplemental Coolant Additives (SCA) must be added to all heavy duty coolants at regular intervals. In addition, when not using a fully formulated, pre-charged antifreeze, like Caterpillar's DEAC, an initial charge of SCA must be added to the cooling system. The amount of SCA added to the system is dependent on the capacity of the system.

The SCA for initial fill is provided as a liquid. SCA's for maintenance intervals are available in liquid form and as a spin-on element. (No Spin-on available for 3600 Family of Engines)

**NOTE:**

The amount of SCA added at initial fill is not the same as the amount added at maintenance intervals.

The coolant additive elements can be used with any ethylene or propylene glycol type antifreeze which meets ASTM D4985 or ASTM D5345 Specifications.

**NOTE:**

For use with standard heavy duty coolant only, not for use with Extended Life Coolant.

**PARTS NEEDED:**

| Cooling System Capacity | | Liquid SCA at Initial Fill | Liquid SCA at Maintenance* | Spin-on SCA Maintenance Element* |
|---|---|---|---|---|
| Liters | Gallons | | | |
| 22-30 | (6-8) | 3P-2044 (1) | 6V-3542 (1) | 111-2370 (1) |
| 30-38 | (8-10) | 3P-2044 (1)<br>6V-3542 (1) | 111-2372 (1) | 111-2369 (1) |
| 38-49 | (10-13) | 3P-2044 (1)<br>8T-1589 (1) | 111-2372 (1) | 111-2369 (1) |
| 49-64 | (13-17) | 3P-2044 (2) | 8T-1589 (1) | 9N-3368 (1) |
| 64-83 | (17-22) | 3P-2044 (2)<br>8T-1589 (1) | 111-2372 (1)<br>6V-3542 (1) | 111-2371 (1) |
| 83-114 | (22-30) | 3P-2044 (3)<br>8T-1589 (1) | 3P-2044 (1) | 9N-3718 (1) |
| 114-163 | (30-43) | 3P-2044 (5) | 3P-2044 (1)<br>6V-3542 (1) | 111-2371 (2) |
| 163-242 | (43-64) | 3P-2044 (8) | 3P-2044 (2) | 9N-3718 (2) |

** Normal maintenance period is 250 hrs. See your Operation and Maintenance Manual for complete coolant maintenance instructions.*

( ) Indicates quantity required.

# ADDITIFS POUR LIQUIDE DE REFROIDISSEMENT

**AVANTAGES POUR LE CLIENT**

L'additif protège contre la cavitation, la mousse, l'érosion, la corrosion et l'accumulation de dépôts dans le circuit de refroidissement.

- L'additif complémentaire fournit une quantité mesurée d'additif.

**DESCRIPTION:**

Les additifs s'épuisent pendant l'utilisation du moteur. C'est pourquoi l'on doit ajouter de l'additif au liquide de refroidissement/antigel pour moteurs diesel à intervalles réguliers. En plus, si l'on n'utilise pas de l'antigel entièrement formulé et pré-chargé comme le liquide de refroidissement/antigel Caterpillar pour moteurs diesel, une quantité initiale d'additif doit être ajoutée au circuit de refroidissement. La quantité d'additif à ajouter au circuit dépend de la contenance du circuit.

L'additif pour le remplissage initial est fourni sous forme liquide. L'additif pour l'entretien ultérieur est disponible sous forme liquide et sous forme d'élément à visser. (Il n'y a pas d'élément à visser pour les moteurs de la famille 3600).

**NOTA:**

La quantité d'additif à ajouter au remplissage initial diffère de la quantité à ajouter aux intervalles d'entretien.

Les éléments d'additif peuvent être utilisés avec tout antigel de type éthylène ou propylène-glycol conforme à la norme ASTM D4985 ou ASTM D5345.

**NOTA:**

A utiliser uniquement avec du liquide de refroidissement pour moteurs diesel et non avec le liquide de refroidissement longue durée.

**PIÈCES NÉCESSAIRES:**

| Contenance du circuit de refroidissement | | Additif liquide au remplissage initial | Additif liquide aux intervalles d'entretien* | Elément d'additif à visser aux intervalles d'entretien* |
|---|---|---|---|---|
| Litres | Gallons U.S. | | | |
| 22-30 | (6-8) | 3P-2044 (1) | 6V-3542 (1) | 111-2370 (1) |
| 30-38 | (8-10) | 3P-2044 (1)<br>6V-3542 (1) | 111-2372 (1) | 111-2369 (1) |
| 38-49 | (10-13) | 3P-2044 (1)<br>8T-1589 (1) | 111-2372 (1) | 111-2369 (1) |
| 49-64 | (13-17) | 3P-2044 (2) | 8T-1589 (1) | 9N-3368 (1) |
| 64-83 | (17-22) | 3P-2044 (2)<br>8T-1589 (1) | 111-2372 (1)<br>6V-3542 (1) | 111-2371 (1) |
| 83-114 | (22-30) | 3P-2044 (3)<br>8T-1589 (1) | 3P-2044 (1) | 9N-3718 (1) |
| 114-163 | (30-43) | 3P-2044 (5) | 3P-2044 (1)<br>6V-3542 (1) | 111-2371 (2) |
| 163-242 | (43-64) | 3P-2044 (8) | 3P-2044 (2) | 9N-3718 (2) |

** L'intervalle d'entretien normal est de 250 heures-service. Voir le Guide d'utilisation et d'entretien pour de plus amples renseignements concernant l'entretien du circuit de refroidissement.*

( ) Indique la quantité exigée.

# ADITIVOS DE REFRIGERANTE SUPLEMENTARIOS

**VENTAJAS PARA EL USUARIO:**

Protegen contra la cavitación, la formación de espuma, la corrosión y la acumulación de escamas en los sistemas de enfriamiento.

- Suministra un acondicionador dosificado de refrigerante.

**DESCRIPCIÓN:**

Los aditivos en el refrigerante se agotan con la operación normal. Por esta razón, se debe agregar Aditivo de refrigerante suplementario (SCA) a todos los refrigerantes para servicio pesado, a intervalos regulares. Además, cuando no se usa un anticongelante de precarga completo, tal como el DEAC de Caterpillar, es necesario agregar una cantidad de aditivo de refrigerante suplementario inicial al sistema de enfriamiento. La cantidad de aditivo que se debe agregar depende de la capacidad del sistema.

El SCA de llenado inicial es líquido. El que se usa para el mantenimiento está disponible tanto en líquido como en un elemento enroscable. (No hay elemento enroscable disponible para la Familia de Motores 3600).

**NOTA:**

La cantidad de aditivo de llenado inicial no es la misma que se agrega en los intervalos de mantenimiento.

Los elementos de aditivo de refrigerante se pueden usar con cualquier anticongelante de tipo glicol etilénico o propílico que esté de acuerdo con las especificaciones de las normas ASTM D4985 o ASTM D5345.

**NOTA:**

Se debe utilizar únicamente con refrigerante estándar para servicio pesado; no se debe usar con Refrigerante de Larga Duración.

**PIEZAS NECESARIAS:**

| Capacidad del Sistema de Enfriamiento | | SCA líquido de llenado inicial | SCA líquido de mantenimiento* | Elemento de mantenimiento enroscable* |
|---|---|---|---|---|
| litros | gal EE.UU. | | | |
| 22-30 | 6-8 | 3P-2044 (1) | 6V-3542 (1) | 111-2370 (1) |
| 30-38 | 8-10 | 3P-2044 (1)<br>6V-3542 (1) | 111-2372 (1) | 111-2369 (1) |
| 38-49 | 10-13 | 3P-2044 (1)<br>8T-1589 (1) | 111-2372 (1) | 111-2369 (1) |
| 49-64 | 13-17 | 3P-2044 (2) | 8T-1589 (1) | 9N-3368 (1) |
| 64-83 | 17-22 | 3P-2044 (2)<br>8T-1589 (1) | 111-2372 (1)<br>6V-3542 (1) | 111-2371 (1) |
| 83-114 | 22-30 | 3P-2044 (3)<br>8T-1589 (1) | 3P-2044 (1) | 9N-3718 (1) |
| 114-163 | 30-43 | 3P-2044 (5) | 3P-2044 (1)<br>6V-3542 (1) | 111-2371 (2) |
| 163-242 | 43-64 | 3P-2044 (8) | 3P-2044 (2) | 9N-3718 (2) |

** El período normal de mantenimiento es de 250 horas. Para ver las instrucciones completas sobre el mantenimiento del refrigerante, consulte el Manual de Operación y Mantenimiento.*

( ) Indica la cantidad necesaria.

# ADITIVOS SUPLEMENTARES DO LÍQUIDO ARREFECEDOR

**BENEFÍCIOS PARA O CLIENTE:**

Protege contra cavitação, espuma, erosão, corrosão e acúmulo de crostas nos sistemas de arrefecimento.

- Fornece uma quantidade pré-determinada de condicionador de arrefecimento.

**DESCRIÇÃO:**

Com a operação normal, os aditivos se esgotam do líquido arrefecedor. Por isso, Aditivos Suplementares do Líquido Arrefecedor (SCA) devem ser acrescentados a todos os líquidos arrefecedores para serviço pesado em intervalos regulares. Além disso, quando um anticongelante pré-carregado, totalmente formulado não for usado, como o DEAC Caterpillar, uma carga inicial de SCA deve ser acrescentada ao sistema de arrefecimento. A quantidade de SCA acrescentada ao sistema depende da capacidade do sistema.

O SCA para abastecimento inicial é fornecido em forma de líquido. Os aditivos suplementares (SCA) para intervalos de manutenção estão à disposição em forma líquida e como um elemento com roscas. (Exceto os Motores da Família 3600)

**NOTA:**

A quantidade de SCA adicionada no abastecimento inicial não é a mesma que a acrescentada nos intervalos de manutenção.

Os elementos do aditivo do líquido arrefecedor podem ser usados com qualquer tipo de anticongelante etileno ou propileno que satisfaz as Especificações ASTM D4985 ou ASTM D5345.

**NOTA:**

Para uso apenas com líquido arrefecedor para serviço pesado padrão, não deve ser usado com Líquido Arrefecedor de Vida Longa.

**PEÇAS NECESSÁRIAS:**

| Capacidade do Sistema de Arrefecimento | | Líquido SCA Durante Abastecimento Inicial | Líquido SCA Durante Manutenção* | Elemento de Manutenção de SCA com Roscas* |
|---|---|---|---|---|
| Litros | Galões | | | |
| 22-30 | 6-8 | 3P-2044 (1) | 6V-3542 (1) | 111-2370 (1) |
| 30-38 | 8-10 | 3P-2044 (1)<br>6V-3542 (1) | 111-2372 (1) | 111-2369 (1) |
| 38-49 | 10-13 | 3P-2044 (1)<br>8T-1589 (1) | 111-2372 (1) | 111-2369 (1) |
| 49-64 | 13-17 | 3P-2044 (2) | 8T-1589 (1) | 9N-3368 (1) |
| 64-83 | 17-22 | 3P-2044 (2)<br>8T-1589 (1) | 111-2372 (1)<br>6V-3542 (1) | 111-2371 (1) |
| 83-114 | 22-30 | 3P-2044 (3)<br>8T-1589 (1) | 3P-2044 (1) | 9N-3718 (1) |
| 114-163 | 30-43 | 3P-2044 (5) | 3P-2044 (1)<br>6V-3542 (1) | 111-2371 (2) |
| 163-242 | 43-64 | 3P-2044 (8) | 3P-2044 (2) | 9N-3718 (2) |

** O período normal de manutenção é de 250 horas. Consulte o Manual de Operação e Manutenção para obter instruções completas quanto à manutenção do líquido arrefecedor.*

( ) Indica a quantidade exigida.

# KÜHLMITTELZUSATZ

**VORTEILE FÜR DEN KUNDEN:**

Schutz gegen Kavitation, Schaumbildung, Erosion, Korrosion und Kesselsteinbildung in Kühlsystemen.

- Richtig dosierter Kühlmittelzusatz

**BESCHREIBUNG:**

Additive erschöpfen sich während des Motorbetriebs. Deshalb muß allen HD-Kühlmitteln regelmäßig Kühlmittelzusatz beigefügt werden. Wenn bei Erstfüllung kein vollwertiges Fertigkühlmittel, wie das Frostschutz- und Kühlmittel für Dieselmotoren von Caterpiller (DEAC), verwendet wird, muß bei Erstfüllung Kühlmittelzusatz beigefügt werden. Wieviel Kühlmittelzusatz beigefügt werden muß, hängt vom Inhalt des Kühlsystems ab.

Für Erstfüllung ist Kühlmittelzusatz nur in flüssiger Form erhältlich. Für Wartungsintervalle ist Kühlmittelzusatz in flüssiger Form und als Zusatzelement erhältlich. (Für die Motorbaureihe 3600 sind keine Zusatzelemente erhältlich.)

**ANMERKUNG:**

Die Kühlmittelmenge bei Erstfüllung ist nicht die gleiche Menge, die bei Wartungsintervallen beigefügt werden muß.

Die Kühlmittelzusatzelemente können mit allen Frostschutzmitteln auf Ethylen- oder Propylenglykolbasis verwendet werden, die den Standards nach ASTM D4985 oder ASTM D5345 entsprechen.

**ANMERKUNG:**

Den Kühlmittelzusatz nicht mit Langzeitkühlmittel (ELC) von Caterpillar verwenden. Der Kühlmittelzusatz ist nur für HD-Kühlmittel bestimmt.

**TEILEBEZEICHNUNG:**

| Kühlsysteminhalt | | Kühlmittelzusatz bei Erstfüllung | Flüssiger Kühlmittelzusatz bei Wartung* | Kühlmittelzusatzelement bei Wartung* |
|---|---|---|---|---|
| Liter | US-Gall. | | | |
| 22-30 | (6-8) | 3P-2044 (1) | 6V-3542 (1) | 111-2370 (1) |
| 30-38 | (8-10) | 3P-2044 (1)<br>6V-3542 (1) | 111-2372 (1) | 111-2369 (1) |
| 38-49 | (10-13) | 3P-2044 (1)<br>8T-1589 (1) | 111-2372 (1) | 111-2369 (1) |
| 49-64 | (13-17) | 3P-2044 (2) | 8T-1589 (1) | 9N-3368 (1) |
| 64-83 | (17-22) | 3P-2044 (2)<br>8T-1589 (1) | 111-2372 (1)<br>6V-3542 (1) | 111-2371 (1) |
| 83-114 | (22-30) | 3P-2044 (3)<br>8T-1589 (1) | 3P-2044 (1) | 9N-3718 (1) |
| 114-163 | (30-43) | 3P-2044 (5) | 3P-2044 (1)<br>6V-3542 (1) | 111-2371 (2) |
| 163-242 | (43-64) | 3P-2044 (8) | 3P-2044 (2) | 9N-3718 (2) |

** Der normale Wartungsintervall beträgt 250 Betriebsstunden. Für vollständige Anweisungen zur Wartung des Kühlsystems, siehe Betriebs- und Wartungshandbuch.*

( ) Erforderliche Anzahl

# MAINTENANCE PARTS

| DESCRIPTION | PART NUMBER | QTY | WHERE USED | PAGE |
|---|---|---|---|---|
| **AIR INLET AND EXHAUST SYSTEM** | | | | |
| INDICATOR GP-AIR FILTER CHANGE | 8N-2694 | 1 | INDICATOR GP-AIR FILTER CHANGE | 78 |
| **BASIC ENGINE** | | | | |
| HOSE (BREATHER) | 198-8645 | 1 | COVER GP-VALVE MECHANISM | 25 |
| PLUG-SUMP DRAIN | 7C-0351 | 2 | PAN GP-OIL | 43 |
| SPRING (BREATHER HOSE) | 162-1565 | 1 | COVER GP-VALVE MECHANISM | 25 |
| **COOLING SYSTEM** | | | | |
| CAP AS (RADIATOR) | 227-4376 | 1 | RADIATOR & HYD OIL COOLER GP | 69 |
| | | 1 | RADIATOR & HYD OIL COOLER GP | 72 |
| PLUG (ENGINE OIL FILTER LINES) | 225-7941 | 1 | COOLER GP-FLTR BASE & ENG OIL | 54 |
| REGULATOR-WATER TEMPERATURE | 225-6908 | 1 | CONNECTION GP-WATER | 53 |
| SEAL-O-RING (WATER TEMPERATURE REGULATOR) | 225-6909 | 1 | CONNECTION GP-WATER | 53 |
| **ELECTRICAL AND STARTING SYSTEM** | | | | |
| BATTERY (12 VOLT) | 3T-5760 | 2 | BATTERY GP | 104 |
| | | 1 | BATTERY GP | 106 |
| | | 1 | BATTERY GP | 108 |
| | 230-6368 | 1 | BATTERY GP | 110 |
| BELT-DRIVE (WARNING BEACON) | 9X-8139 | 1 | LAMP GP-WARNING BEACON | 131 |
| | | 1 | LAMP GP-WARNING BEACON | 132 |
| FUSE (10 AMP) | 113-8490 | 2 | LIGHTING GP-FLOOD | 133 |
| | | 2 | LIGHTING GP-FLOOD | 138 |
| | | 1 | WIRING GP-AIR CONDITIONER | 173 |
| | | 1 | WIRING GP-POWER RECEPTACLE | 202 |
| | | 1 | WIRING GP-RIDE CONTROL | 208 |
| | | 1 | WIRING GP-RIDE CONTROL | 210 |
| | | 1 | WIRING GP-RIDE CONTROL | 212 |
| | | 1 | WIRING GP-CAB | 181 |
| FUSE (10-AMPERE) | 3K-8782 | 1 | LAMP GP-WARNING BEACON | 131 |
| | | 1 | LAMP GP-WARNING BEACON | 132 |
| | 113-8490 | 2 | LIGHTING GP-FLOOD | 142 |
| | | 1 | WIRING GP-RIDE CONTROL | 206 |
| FUSE (15 AMP) | 113-8491 | 3 | LIGHTING GP-FLOOD | 133 |
| | | 2 | LIGHTING GP-FLOOD | 136 |
| | | 2 | LIGHTING GP-FLOOD | 138 |
| FUSE (15-AMPERE) | 113-8491 | 2 | LIGHTING GP-FLOOD | 140 |
| | | 2 | LIGHTING GP-FLOOD | 142 |
| FUSE (20 AMP) | 113-8492 | 2 | WIRING GP-CAB | 178 |
| FUSE (5 AMP) | 141-2759 | 1 | WIRING GP-CAB | 178 |
| | | 1 | WIRING GP-STEERING | 217 |
| GLOW PLUG | 232-6662 | 4 | GLOW PLUG GP | 113 |
| HOLDER AS-BRUSH | 7T-6092 | 1 | STARTING MOTOR GP-ELECTRIC | 166 |
| LAMP AS (ROTATING WARNING) | 185-7016 | 1 | LAMP GP-WARNING BEACON | 132 |
| LAMP AS (12-VOLT) | 165-5655 | 1 | INSTALLATION GP-SECURITY | 115 |
| LAMP-HEAD (12 VOLT) | 9W-3324 | 1 | LAMP GP-HEAD & SIGNAL | 124 |
| | | 1 | LAMP GP-HEAD & SIGNAL | 126 |
| LAMP-HEAD (12-VOLT, 60/55 WATT) | 9W-3324 | 1 | LAMP GP-HEAD & SIGNAL | 120 |
| | | 1 | LAMP GP-HEAD & SIGNAL | 122 |
| LAMP (12 VOLT) | 195-9712 | 1 | LAMP GP-REGISTRATION PLATE | 128 |
| LAMP (12-VOLT) | 7X-9065 | 1 | WIRING GP-CONSOLE | 185 |

# MAINTENANCE PARTS

| DESCRIPTION | PART NUMBER | QTY | WHERE USED | PAGE |
|---|---|---|---|---|
| LAMP (12-VOLT) (CONVERTER OIL TEMP) | 7X-9065 | 1 | WIRING GP-CONSOLE | 187 |
| LAMP (12-VOLT) (COOLANT TEMPERATURE GAUGE) | 7X-9065 | 1 | WIRING GP-CONSOLE | 187 |
| LAMP (12-VOLT) (FUEL LEVEL) | 7X-9065 | 1 | WIRING GP-CONSOLE | 187 |
| LAMP (12 VOLT) (MINIATURE) | 100-3246 | 2 | LAMP GP-HEAD & SIGNAL | 124 |
| | | 2 | LAMP GP-HEAD & SIGNAL | 126 |
| LAMP (12-VOLT) (VOLT METER) | 7X-9065 | 1 | WIRING GP-CONSOLE | 187 |
| LAMP (12 VOLT) (21 WATT) | 5G-3244 | 1 | LAMP GP-HEAD & SIGNAL | 124 |
| | | 1 | LAMP GP-HEAD & SIGNAL | 126 |
| LAMP (12-VOLT, 21-WATT) | 5G-3244 | 1 | LAMP GP-HEAD & SIGNAL | 120 |
| | | 1 | LAMP GP-HEAD & SIGNAL | 122 |
| LAMP (12-VOLT, 4-WATT) | 100-3246 | 1 | LAMP GP-HEAD & SIGNAL | 120 |
| | | 1 | LAMP GP-HEAD & SIGNAL | 122 |
| LAMP (12 VOLT, 55 WATT) | 9X-8118 | 1 | LAMP GP-WARNING BEACON | 132 |
| | 9W-0607 | 1 | LAMP GP-FLOOD | 118 |
| | | 1 | LAMP GP-FLOOD | 119 |
| | | 1 | LIGHTING GP-FLOOD | 136 |
| LAMP (12-VOLT, 55-WATT) | 9X-8118 | 1 | LAMP GP-WARNING BEACON | 131 |
| | 9W-0607 | 1 | LIGHTING GP-FLOOD | 142 |
| | | 1 | LIGHTING GP-FLOOD | 140 |
| LAMP (12 VOLT, 55 WATT) (FLOOD) | 9W-0607 | 1 | LIGHTING GP-FLOOD | 136 |
| LAMP (12 VOLT/21 WATT) | 5G-3244 | 1 | LAMP GP-FLOOD | 117 |
| LAMP (12 VOLT)(55 WATT) | 9W-0607 | 1 | LIGHTING GP-FLOOD | 133 |
| LAMP (12 VOLT/55 WATT) | 9W-0607 | 1 | LIGHTING GP-FLOOD | 138 |
| LAMP (12 VOLT)(55 WATT) | 9W-0607 | 1 | LIGHTING GP-FLOOD | 133 |
| LAMP (12 VOLT/55 WATT) | 9W-0607 | 1 | LIGHTING GP-FLOOD | 138 |
| LAMP (12VOLT/21WATT) (TURN SIGNAL) | 3C-4883 | 1 | LAMP GP-STOP & TAIL | 130 |
| LAMP (12VOLT/21/5WATT) (STOP) | 3C-6516 | 1 | LAMP GP-STOP & TAIL | 130 |
| LENS | 8I-4721 | 1 | LAMP GP-FLOOD | 117 |
| LENS (AMBER) | 100-3250 | 1 | LAMP GP-HEAD & SIGNAL | 120 |
| | | 1 | LAMP GP-HEAD & SIGNAL | 122 |
| | 9X-8121 | 1 | LAMP GP-WARNING BEACON | 131 |
| | | 1 | LAMP GP-WARNING BEACON | 132 |
| LENS-AMBER | 100-3250 | 1 | LAMP GP-HEAD & SIGNAL | 124 |
| | | 1 | LAMP GP-HEAD & SIGNAL | 126 |
| LENS AS | 100-3248 | 1 | LAMP GP-HEAD & SIGNAL | 120 |
| | | 1 | LAMP GP-HEAD & SIGNAL | 124 |
| | | 1 | LAMP GP-HEAD & SIGNAL | 126 |
| | 100-3249 | 1 | LAMP GP-HEAD & SIGNAL | 122 |
| | 136-3848 | 1 | LAMP GP-HEAD & SIGNAL | 124 |
| | | 1 | LAMP GP-HEAD & SIGNAL | 126 |
| LENS AS (FLOOD) | 202-6611 | 1 | LAMP GP-FLOOD | 119 |
| | 202-6614 | 1 | LAMP GP-FLOOD | 118 |
| LENS (CLEAR) | 176-0346 | 1 | LIGHTING GP-FLOOD | 138 |
| LENS (CLEAR) (FLOODLAMP) | 176-0346 | 1 | LIGHTING GP-FLOOD | 136 |
| LENS (STOP/TURN SIGNAL) | 092-6279 | 1 | LAMP GP-STOP & TAIL | 130 |
| REFLECTOR | 9R-1499 | 2 | LIGHTING GP-ROADING | 146 |
| | | 2 | LIGHTING GP-ROADING | 149 |
| | | 2 | LIGHTING GP-ROADING | 152 |
| | | 2 | LIGHTING GP-ROADING | 155 |
| | | 2 | LIGHTING GP-ROADING | 158 |

# MAINTENANCE PARTS

| DESCRIPTION | PART NUMBER | QTY | WHERE USED | PAGE |
|---|---|---|---|---|
| **FRAME AND BODY** | | | | |
| FITTING-GREASE (1/8-27 THD) | 3B-8488 | 2 | FRAME GP-SLIDING | 324 |
| | 3B-8489 | 2 | FRAME GP-SLIDING | 324 |
| **FUEL SYSTEM** | | | | |
| CAP-FUEL | 201-0330 | 1 | TANK GP-FUEL | 102 |
| ELEMENT-FILTER (FUEL) | 228-9130 | 1 | PUMP GP-FUEL PRIMING | 98 |
| FILTER ELEMENT AS-FUEL | 1R-1804 | 1 | FILTER GP-FUEL | 88 |
| **HYDRAULIC SYSTEM** | | | | |
| CAP AS | 6V-9830 | 2 | LINES GP-LOADER AUXILIARY | 462 |
| | 6V-9831 | 2 | LINES GP-LIFT CYLINDER | 446 |
| | | 2 | LINES GP-LOAD CONTROL VALVE | 459 |
| CAP-DUST | 6V-0852 | 1 | CONNECTOR GP-VALVE | 347 |
| | | 1 | LINES GP-PILOT | 474 |
| CAP-FILL (HYDRAULIC TANK) | 237-3797 | 1 | TANK GP-HYDRAULIC | 539 |
| FILTER | 4T-4520 | 1 | VALVE GP-CONTROL | 559 |
| | | 1 | VALVE GP-CONTROL | 561 |
| | | 1 | VALVE GP-CONTROL | 563 |
| | | 1 | VALVE GP-CONTROL | 565 |
| | | 1 | VALVE GP-CONTROL | 567 |
| | | 1 | VALVE GP-CONTROL | 569 |
| | | 1 | VALVE GP-CONTROL | 571 |
| | | 1 | VALVE GP-CONTROL | 573 |
| | | 1 | VALVE GP-CONTROL | 575 |
| | | 1 | VALVE GP-CONTROL | 577 |
| FILTER AS-OIL (CLEANOUT/HIGH EFFICIENCY) | 126-1817 | 1 | HYDRAULIC AR | 396 |
| | | 1 | HYDRAULIC AR | 397 |
| FILTER AS-OIL (HYDRAULIC) (FIRE RESISTANT) | 134-3014 | 1 | HYDRAULIC AR | 396 |
| | | 1 | HYDRAULIC AR | 397 |
| FILTER (HYDRAULIC TANK BREATHER) | 9R-9925 | 1 | TANK GP-HYDRAULIC | 539 |
| FITTING-GREASE (1/8-27 THD) | 3B-8489 | 4 | MOUNTING GP-CYLINDER | 527 |
| SEAL-O-RING | 2M-9780 | 1 | LINES GP-EXTENDABLE STICK | 445 |
| **IMPLEMENTS** | | | | |
| FITTING-GREASE | 3B-8488 | 3 | BOOM GP | 588 |
| | 3B-8489 | 5 | LINKAGE GP-BACKHOE BUCKET | 596 |
| | | 2 | MOUNTING GP-STICK | 604 |
| FITTING-GREASE (1/8-27 THD) | 3B-8488 | 1 | STICK GP-HOE | 613 |
| | 3B-8489 | 1 | STICK GP-EXTENDABLE | 609 |
| | | 1 | STICK GP-EXTENDABLE | 611 |
| | | 2 | STICK GP-HOE | 613 |
| **LUBRICATION SYSTEM** | | | | |
| FILTER AS-ENGINE OIL | 7W-2326 | 1 | FILLER GP-ENGINE OIL | 51 |

# MAINTENANCE PARTS

| DESCRIPTION | PART NUMBER | QTY | WHERE USED | PAGE |
|---|---|---|---|---|
| **OPERATOR STATION** | | | | |
| BLADE AS | 102-2940 | 2 | WIPER GP-WINDOW | 797 |
| BLADE-WIPER | 5C-8813 | 1 | WIPER GP-WINDOW | 797 |
| FILTER | 206-7514 | 1 | AIR CONDITIONER & MOUNTING GP | 698 |
| | | 1 | HEATER & MTG GP-CAB | 741 |
| FILTER-AIR | 170-7272 | 1 | HEATER GP-CAB | 743 |
| FILTER-AIR (CAB AIR) | 170-7272 | 1 | AIR CONDITIONER GP | 700 |
| LAMP (12 VOLT) | 122-7137 | 1 | TACHOMETER GP-ELECTRIC | 781 |
| | | 1 | TACHOMETER GP-ELECTRIC | 782 |
| LAMP (12 VOLT) (MINIATURE) | 189-3610 | 1 | MODULE GP-WARNING INDICATOR | 753 |
| LAMP (12 VOLT, 10 WATT) | 6R-7490 | 1 | SUPPRESSION GP-SOUND | 776 |
| V-BELT (AIR CONDITIONING COMPRESSOR) | 1W-2934 | 1 | COMPRESSOR GP-REFRIGERANT | 715 |
| V-BELT SET (INCLUDES 2 BELTS) | 3N-1491 | 1 | CAB AR | 704 |
| | | 1 | CAB AR-ENCLOSED ROPS | 706 |
| | 5L-3308 | 1 | CAB AR | 703 |
| | | 1 | CAB AR-ENCLOSED ROPS | 705 |
| | | 1 | CANOPY AR | 711 |
| **POWER TRAIN** | | | | |
| BREATHER | 7T-3251 | 1 | TRANSMISSION GP-POWER SHIFT | 256 |
| BREATHER (AXLE) | 197-9155 | 1 | AXLE GP-DRIVE & STEERING | 218 |
| BREATHER (TRANSMISSION) | 7T-3251 | 1 | TRANSMISSION GP-DIRECT DRIVE | 249 |
| CAP | 2D-2633 | 1 | VALVE GP-TIRE | 267 |
| CAP (VALVE STEM) | 2D-2633 | 1 | VALVE GP-TIRE | 266 |
| FILTER AS-OIL (TRANSMISSION) | 119-4740 | 1 | TRANSMISSION AR-DIRECT DRIVE | 247 |
| | | 1 | TRANSMISSION AR-POWER SHIFT | 247 |
| PLUG AS-MAGNETIC | 152-6144 | 3 | AXLE GP-DRIVE & STEERING | 218 |
| | | 1 | DIFFERENTIAL & BEVEL GEAR GP | 227 |
| PLUG-MAGNETIC | 9R-6602 | 2 | AXLE GP-REAR | 222 |
| SEAL-O-RING | 5P-6718 | 1 | TRANSMISSION GP-POWER SHIFT | 256 |
| STRAINER | 7T-2651 | 1 | TRANSMISSION GP-POWER SHIFT | 254 |
| STRAINER (TRANSMISSION CASE) | 7T-2651 | 1 | TRANSMISSION GP-DIRECT DRIVE | 250 |
| VALVE AS-RELIEF (AIR VENT) | 5F-5434 | 1 | MOUNTING GP-AXLE | 237 |
| **SERVICE EQUIPMENT AND SUPPLIES** | | | | |
| KEY | 5P-8500 | 1 | LOCK GP-VANDALISM | 803 |
| PADLOCK GP | 5P-8502 | 2 | LOCK GP-VANDALISM | 802 |
| | | 3 | LOCK GP-VANDALISM | 803 |
| SLEEVE | 8Y-6364 | 1 | LOCK GP-VANDALISM | 803 |
| **WORK TOOLS** | | | | |
| FITTING-GREASE | 3B-8489 | 2 | BUCKET GP-MULTIPURPOSE | 668 |
| | | 2 | BUCKET GP-MULTIPURPOSE | 674 |
| | | 2 | BUCKET GP-MULTIPURPOSE | 675 |
| FITTING-GREASE (1/8-27 THD) | 3B-8489 | 2 | BUCKET GP-MULTIPURPOSE | 666 |
| | | 2 | BUCKET GP-MULTIPURPOSE | 667 |
| | | 2 | BUCKET GP-MULTIPURPOSE | 669 |
| | | 2 | MOUNTING GP-BUCKET | 689 |
| FITTING-HYDRAULIC | 8B-7121 | 1 | COUPLER GP-QUICK | 678 |

# PIÈCES DE RECHANGE

| DESCRIPTION | NUMÉRO DE PIECÈS | QTÉ | DOMAINE D'APPLICATION | PAGE |
|---|---|---|---|---|
| **CHÂSSIS ET BENNE** | | | | |
| GRAISSEUR (FILET 1/8-27) | 3B-8488 | 2 | BATI - DEPORT LATERAL (ASS) | 324 |
| | 3B-8489 | 2 | BATI - DEPORT LATERAL (ASS) | 324 |
| **CIRCUIT D'ADMISSION D'AIR ET D'ÉCHAPPEMENT** | | | | |
| INDICATEUR DE COLMATAGE DE FILTRE À AIR (ASS) | 8N-2694 | 1 | INDICATEUR DE COLMATAGE DE FILTRE À AIR (ASS) | 78 |
| **CIRCUIT DE CARBURANT** | | | | |
| BOUCHON DE CARBURANT | 201-0330 | 1 | RÉSERVOIR DE CARBURANT (ASS) | 102 |
| ÉLÉMENT DE FILTRE (CARBURANT) | 228-9130 | 1 | POMPE D'AMORÇAGE DE CARBURANT (ASS) | 98 |
| ÉLÉMENT DE FILTRE (ENS)-CARBURANT | 1R-1804 | 1 | FILTRE A CARBURANT (ASS) | 88 |
| **CIRCUIT DE GRAISSAGE** | | | | |
| FILTRE A HUILE MOTEUR (ENS) | 7W-2326 | 1 | BOUCHON DE REMPLISSAGE D'HUILE MOTEUR (ASS) | 51 |
| **CIRCUIT DE REFROIDISSEMENT** | | | | |
| BOUCHON FILETÉ (CANALISATIONS DE FILTRE À HUILE DE MOTEUR) | 225-7941 | 1 | SUPPORT DE FILTRE ET REFROIDISSEUR D'HUILE MOTEUR | 54 |
| CHAPEAU (ENS) (RADIATEUR) | 227-4376 | 1 | RADIATEUR ET REFROIDISSEUR D'HUILE HYDRAULIQUE (ASS) | 69 |
| | | 1 | RADIATEUR ET REFROIDISSEUR D'HUILE HYDRAULIQUE (ASS) | 72 |
| JOINT TORIQUE (RÉGULATEUR DE TEMPÉRATURE D'EAU) | 225-6909 | 1 | RACCORD D'EAU (ASS) | 53 |
| THERMOSTAT-TEMPÉRATURE D'EAU | 225-6908 | 1 | RACCORD D'EAU (ASS) | 53 |
| **CIRCUIT ÉLECTRIQUE ET DE DÉMARRAGE** | | | | |
| AMPOULE (12 VOLTS) | 7X-9065 | 1 | CABLAGE DE CONSOLE (ASS) | 185 |
| | 195-9712 | 1 | LAMPE-PLAQUE D'IMMATRICULATION (ASS) | 128 |
| AMPOULE (12 VOLTS) (INDICATEUR DE TEMPÉRATURE DE LIQUIDE DE REFROIDISSEMENT) | 7X-9065 | 1 | CABLAGE DE CONSOLE (ASS) | 187 |
| AMPOULE (12 VOLTS) (MINIATURE) | 100-3246 | 2 | LAMPE - PHARE ET CLIGNOTANT | 124 |
| | | 2 | LAMPE - PHARE ET CLIGNOTANT | 126 |
| AMPOULE (12 VOLTS) (NIVEAU DE CARBURANT) | 7X-9065 | 1 | CABLAGE DE CONSOLE (ASS) | 187 |
| AMPOULE (12 VOLTS) (TEMPÉRATURE D'HUILE DE CONVERTISSEUR) | 7X-9065 | 1 | CABLAGE DE CONSOLE (ASS) | 187 |
| AMPOULE (12 VOLTS) (VOLTMÈTRE) | 7X-9065 | 1 | CABLAGE DE CONSOLE (ASS) | 187 |
| AMPOULE (12 VOLTS) (21 WATTS) | 5G-3244 | 1 | LAMPE - PHARE ET CLIGNOTANT | 124 |
| | | 1 | LAMPE - PHARE ET CLIGNOTANT | 126 |
| AMPOULE (12 VOLTS/ 21 WATTS) | 5G-3244 | 1 | LAMPE - PHARE (ASS) | 117 |
| AMPOULE (12 VOLTS, 55 WATTS) | 9W-0607 | 1 | ÉCLAIRAGE - PROJECTEURS (ASS) | 136 |
| | | 1 | LAMPE - PHARE (ASS) | 118 |
| | 9X-8118 | 1 | LAMPE - GYROPHARE (ASS) | 132 |
| | 9W-0607 | 1 | LAMPE - PHARE (ASS) | 119 |
| AMPOULE (12 VOLTS, 55 WATTS) (PROJECTEUR) | 9W-0607 | 1 | ÉCLAIRAGE - PROJECTEURS (ASS) | 136 |
| AMPOULE (12 VOLTS)(55 WATTS) | 9W-0607 | 1 | ÉCLAIRAGE - PROJECTEURS (ASS) | 133 |

# PIÈCES DE RECHANGE

| DESCRIPTION | NUMÉRO DE PIECÈS | QTÉ | DOMAINE D'APPLICATION | PAGE |
|---|---|---|---|---|
| AMPOULE (12 VOLTS/55 WATTS) | 9W-0607 | 1 | ÉCLAIRAGE - PROJECTEURS (ASS) | 138 |
| AMPOULE (12V, 21W) | 5G-3244 | 1 | LAMPE - PHARE ET CLIGNOTANT | 120 |
| | | 1 | LAMPE - PHARE ET CLIGNOTANT | 122 |
| AMPOULE (12V, 4W) | 100-3246 | 1 | LAMPE - PHARE ET CLIGNOTANT | 120 |
| | | 1 | LAMPE - PHARE ET CLIGNOTANT | 122 |
| AMPOULE (12V, 55W) | 9W-0607 | 1 | ÉCLAIRAGE - PROJECTEURS (ASS) | 140 |
| | | 1 | ÉCLAIRAGE - PROJECTEURS (ASS) | 142 |
| | 9X-8118 | 1 | LAMPE - GYROPHARE (ASS) | 131 |
| AMPOULE (12VOLTS/ 21/ 5WATTS) (ARRÊT) | 3C-6516 | 1 | FEUX ARRIÈRE ET FEUX D'ARRÊT | 130 |
| AMPOULE (12VOLTS/ 21WATTS) (CLIGNOTANT DE DIRECTION) | 3C-4883 | 1 | FEUX ARRIÈRE ET FEUX D'ARRÊT | 130 |
| BATTERIE (12 VOLTS) | 3T-5760 | 2 | BATTERIE (ASS) | 104 |
| | | 1 | BATTERIE (ASS) | 106 |
| | | 1 | BATTERIE (ASS) | 108 |
| | 230-6368 | 1 | BATTERIE (ASS) | 110 |
| BOUGIE DE PRECHAUFFAGE | 232-6662 | 4 | BOUGIE DE PRÉCHAUFFAGE (ASS) | 113 |
| ENTRAÎNEMENT POUR COURROIE (GYROPHARE) | 9X-8139 | 1 | LAMPE - GYROPHARE (ASS) | 132 |
| | | 1 | LAMPE - GYROPHARE (ASS) | 131 |
| FUSIBLE (10A) | 3K-8782 | 1 | LAMPE - GYROPHARE (ASS) | 131 |
| | | 1 | LAMPE - GYROPHARE (ASS) | 132 |
| | 113-8490 | 1 | CABLAGE - CLIMATISEUR (ASS) | 173 |
| | | 1 | CÂBLAGE DE COMMANDE DE TRANSLATION (ASS) | 206 |
| | | 1 | CÂBLAGE DE COMMANDE DE TRANSLATION (ASS) | 208 |
| | | 1 | CÂBLAGE DE COMMANDE DE TRANSLATION (ASS) | 210 |
| | | 1 | CÂBLAGE DE COMMANDE DE TRANSLATION (ASS) | 212 |
| | | 1 | CABLAGE DE PRISE DE FORCE | 202 |
| | | 2 | ÉCLAIRAGE - PROJECTEURS (ASS) | 133 |
| | | 2 | ÉCLAIRAGE - PROJECTEURS (ASS) | 138 |
| | | 2 | ÉCLAIRAGE - PROJECTEURS (ASS) | 142 |
| | | 1 | CABLAGE DE CABINE (ASS) | 181 |
| FUSIBLE (15A) | 113-8491 | 3 | ÉCLAIRAGE - PROJECTEURS (ASS) | 133 |
| | | 2 | ÉCLAIRAGE - PROJECTEURS (ASS) | 136 |
| | | 2 | ÉCLAIRAGE - PROJECTEURS (ASS) | 138 |
| | | 2 | ÉCLAIRAGE - PROJECTEURS (ASS) | 140 |
| | | 2 | ÉCLAIRAGE - PROJECTEURS (ASS) | 142 |
| FUSIBLE (20 A) | 113-8492 | 2 | CABLAGE DE CABINE (ASS) | 178 |
| FUSIBLE (5A) | 141-2759 | 1 | CABLAGE DE CABINE (ASS) | 178 |
| | | 1 | CABLAGE DE DIRECTION (ASS) | 217 |
| LAMPE - FEUX AV (12 VOLTS) | 9W-3324 | 1 | LAMPE - PHARE ET CLIGNOTANT | 124 |
| | | 1 | LAMPE - PHARE ET CLIGNOTANT | 126 |
| LAMPE - FEUX AV (12V, 60/55W) | 9W-3324 | 1 | LAMPE - PHARE ET CLIGNOTANT | 120 |
| | | 1 | LAMPE - PHARE ET CLIGNOTANT | 122 |
| LAMPE (ENS) (TÉMOIN ROTATIF) | 185-7016 | 1 | LAMPE - GYROPHARE (ASS) | 132 |
| LAMPE (ENS) (12 VOLTS) | 165-5655 | 1 | MONTAGE-SÉCURITÉ (ASS) | 115 |
| LENTILLE | 8I-4721 | 1 | LAMPE - PHARE (ASS) | 117 |
| LENTILLE (ENS) | 100-3248 | 1 | LAMPE - PHARE ET CLIGNOTANT | 126 |
| | 136-3848 | 1 | LAMPE - PHARE ET CLIGNOTANT | 124 |
| | 100-3248 | 1 | LAMPE - PHARE ET CLIGNOTANT | 120 |

# PIÈCES DE RECHANGE

| DESCRIPTION | NUMÉRO DE PIECÈS | QTÉ | DOMAINE D'APPLICATION | PAGE |
|---|---|---|---|---|
| | | 1 | LAMPE - PHARE ET CLIGNOTANT | 124 |
| | 100-3249 | 1 | LAMPE - PHARE ET CLIGNOTANT | 122 |
| | 136-3848 | 1 | LAMPE - PHARE ET CLIGNOTANT | 126 |
| LENTILLE (ENS) (PROJECTEUR) | 202-6611 | 1 | LAMPE - PHARE (ASS) | 119 |
| | 202-6614 | 1 | LAMPE - PHARE (ASS) | 118 |
| LENTILLE (JAUNE) | 9X-8121 | 1 | LAMPE - GYROPHARE (ASS) | 131 |
| | | 1 | LAMPE - GYROPHARE (ASS) | 132 |
| | 100-3250 | 1 | LAMPE - PHARE ET CLIGNOTANT | 120 |
| | | 1 | LAMPE - PHARE ET CLIGNOTANT | 122 |
| LENTILLE ORANGE | 100-3250 | 1 | LAMPE - PHARE ET CLIGNOTANT | 124 |
| | | 1 | LAMPE - PHARE ET CLIGNOTANT | 126 |
| LENTILLE (SIGNAL D'ARRÊT/ CLIGNOTANT DE DIRECTION) | 092-6279 | 1 | FEUX ARRIÈRE ET FEUX D'ARRÊT | 130 |
| LENTILLE (TRANSPARENT) | 176-0346 | 1 | ÉCLAIRAGE - PROJECTEURS (ASS) | 138 |
| LENTILLE (TRANSPARENT) (PROJECTEUR) | 176-0346 | 1 | ÉCLAIRAGE - PROJECTEURS (ASS) | 136 |
| PORTE-BALAIS (ENS) | 7T-6092 | 1 | DÉMARREUR ÉLECTRIQUE (ASS) | 166 |
| RÉFLECTEUR | 9R-1499 | 2 | ÉCLAIRAGE - FEUX DE ROUTE (ASS) | 146 |
| | | 2 | ÉCLAIRAGE - FEUX DE ROUTE (ASS) | 149 |
| | | 2 | ÉCLAIRAGE - FEUX DE ROUTE (ASS) | 152 |
| | | 2 | ÉCLAIRAGE - FEUX DE ROUTE (ASS) | 155 |
| | | 2 | ÉCLAIRAGE - FEUX DE ROUTE (ASS) | 158 |

# PIÈCES DE RECHANGE

| DESCRIPTION | NUMÉRO DE PIECÈS | QTÉ | DOMAINE D'APPLICATION | PAGE |
|---|---|---|---|---|
| **CIRCUIT HYDRAULIQUE** | | | | |
| BOUCHON DE REMPLISSAGE (RÉSERVOIR HYDRAULIQUE) | 237-3797 | 1 | RÉSERVOIR HYDRAULIQUE (ASS) | 539 |
| CHAPEAU (ENS) | 6V-9830 | 2 | CANALISATIONS-CHARGEUSE AUXILIAIRE (ASS) | 462 |
| | 6V-9831 | 2 | CANALISATIONS DE VÉRIN DE LEVAGE (ASS) | 446 |
| | | 2 | CANALISATIONS-VALVE DE CONTROLE DE CHARGE | 459 |
| FILTRE | 4T-4520 | 1 | DISTRIBUTEUR (ASS) | 559 |
| | | 1 | DISTRIBUTEUR (ASS) | 561 |
| | | 1 | DISTRIBUTEUR (ASS) | 563 |
| | | 1 | DISTRIBUTEUR (ASS) | 565 |
| | | 1 | DISTRIBUTEUR (ASS) | 567 |
| | | 1 | DISTRIBUTEUR (ASS) | 569 |
| | | 1 | DISTRIBUTEUR (ASS) | 571 |
| | | 1 | DISTRIBUTEUR (ASS) | 573 |
| | | 1 | DISTRIBUTEUR (ASS) | 575 |
| | | 1 | DISTRIBUTEUR (ASS) | 577 |
| FILTRE À HUILE (ENS) (HYDRAULIQUE) (ININFLAMMABLE) | 134-3014 | 1 | VERSION HYDRAULIQUE | 396 |
| | | 1 | VERSION HYDRAULIQUE | 397 |
| FILTRE À HUILE (ENS) (NETTOYAGE/ GRANDE EFFICACITÉ) | 126-1817 | 1 | VERSION HYDRAULIQUE | 396 |
| | | 1 | VERSION HYDRAULIQUE | 397 |
| FILTRE (RENIFLARD DE RÉSERVOIR HYDRAULIQUE) | 9R-9925 | 1 | RÉSERVOIR HYDRAULIQUE (ASS) | 539 |
| GRAISSEUR (FILET 1/8-27) | 3B-8489 | 4 | MONTAGE DE VÉRIN (ASS) | 527 |
| JOINT TORIQUE | 2M-9780 | 1 | CANALISATIONS DU BRAS TELESCOPIQUE (ASS) | 445 |
| PARE-POUSSIERE | 6V-0852 | 1 | CANALISATIONS A COMMANDE PILOTE (ASS) | 474 |
| | | 1 | RACCORD DE SOUPAPE (ASS) | 347 |
| **ÉQUIPEMENTS** | | | | |
| GRAISSEUR | 3B-8488 | 3 | FLECHE (ASS) | 588 |
| | 3B-8489 | 2 | MONTAGE DE BRAS (ASS) | 604 |
| | | 5 | TIMONERIE DE GODET RÉTRO (ASS) | 596 |
| GRAISSEUR (FILET 1/8-27) | 3B-8488 | 1 | BRAS DE PELLE RETRO (ASS) | 613 |
| | 3B-8489 | 2 | BRAS DE PELLE RETRO (ASS) | 613 |
| | | 1 | BRAS TÉLESCOPIQUE (ASS) | 609 |
| | | 1 | BRAS TÉLESCOPIQUE (ASS) | 611 |
| **MATÉRIEL ET FOURNITURES D'ENTRETIEN** | | | | |
| CADENAS (ASS) | 5P-8502 | 2 | VERROUILLAGE ANTI-VANDALISME (ASS) | 802 |
| | | 3 | VERROUILLAGE ANTI-VANDALISME (ASS) | 803 |
| CLÉ | 5P-8500 | 1 | VERROUILLAGE ANTI-VANDALISME (ASS) | 803 |
| MANCHON | 8Y-6364 | 1 | VERROUILLAGE ANTI-VANDALISME (ASS) | 803 |

# PIÈCES DE RECHANGE

| DESCRIPTION | NUMÉRO DE PIECÈS | QTÉ | DOMAINE D'APPLICATION | PAGE |
|---|---|---|---|---|
| **MOTEUR STANDARD** | | | | |
| BOUCHON-VIDANGE DU CARTER | 7C-0351 | 2 | HUILE MOTEUR - CARTER (ASS) | 43 |
| FLEXIBLE (RENIFLARD) | 198-8645 | 1 | CACHE-SOUPAPES (ASS) | 25 |
| RESSORT (FLEXIBLE DE RENIFLARD) | 162-1565 | 1 | CACHE-SOUPAPES (ASS) | 25 |
| **OUTILS DE TRAVAIL** | | | | |
| GRAISSEUR | 3B-8489 | 2 | GODET TOUS-TRAVAUX (ASS) | 668 |
| | | 2 | GODET TOUS-TRAVAUX (ASS) | 674 |
| | | 2 | GODET TOUS-TRAVAUX (ASS) | 675 |
| | 8B-7121 | 1 | COUPLEUR EXPRESS (ASS) | 678 |
| GRAISSEUR (FILET 1/8-27) | 3B-8489 | 2 | GODET - MONTAGE (ASS) | 689 |
| | | 2 | GODET TOUS-TRAVAUX (ASS) | 666 |
| | | 2 | GODET TOUS-TRAVAUX (ASS) | 667 |
| | | 2 | GODET TOUS-TRAVAUX (ASS) | 669 |
| **POSTE DE CONDUITE** | | | | |
| AMPOULE (12 VOLTS) | 122-7137 | 1 | COMPTE-TOURS ÉLECTRIQUE (ASS) | 781 |
| | | 1 | COMPTE-TOURS ÉLECTRIQUE (ASS) | 782 |
| AMPOULE (12 VOLTS) (MINIATURE) | 189-3610 | 1 | MODULE - TÉMOIN (ASS) | 753 |
| AMPOULE (12V, 10W) | 6R-7490 | 1 | INSONORISATION (ASS) | 776 |
| BALAI D'ESSUIE-GLACE | 5C-8813 | 1 | ESSUIE-GLACE (ASS) | 797 |
| BALAI D'ESSUIE-GLACE (ENS) | 102-2940 | 2 | ESSUIE-GLACE (ASS) | 797 |
| COURROIE TRAPEZOIDALE (COMPRESSEUR CLIMATISATION) | 1W-2934 | 1 | COMPRESSEUR DE REFRIGERANT (ASS) | 715 |
| FILTRE | 206-7514 | 1 | CHAUFFAGE ET MONTAGE - CABINE (ASS) | 741 |
| | | 1 | CLIMATISEUR ET MONTAGE (ASS) | 698 |
| FILTRE À AIR | 170-7272 | 1 | CHAUFFAGE DE CABINE (ASS) | 743 |
| FILTRE À AIR (AÉRATION DE LA CABINE) | 170-7272 | 1 | CLIMATISEUR (ASS) | 700 |
| JEU DE COURROIES TRAPEZOIDALES (COMPREND 2 COURROIES) | 3N-1491 | 1 | CABINE ROPS FERMÉE (VERSION) | 706 |
| | | 1 | CABINE (VERSION) | 704 |
| | 5L-3308 | 1 | CABINE ROPS FERMÉE (VERSION) | 705 |
| | | 1 | CABINE (VERSION) | 703 |
| | | 1 | TOIT (VERSION) | 711 |

# PIÈCES DE RECHANGE

| DESCRIPTION | NUMÉRO DE PIECÈS | QTÉ | DOMAINE D'APPLICATION | PAGE |
|---|---|---|---|---|
| **TRANSMISSION** | | | | |
| BOUCHON AIMANTÉ | 9R-6602 | 2 | ESSIEU AR (ASS) | 222 |
| BOUCHON MAGNÉTIQUE (ENS) | 152-6144 | 1 | COURONNE ET DIFFERENTIEL (ASS) | 227 |
| | | 3 | ESSIEU MOTEUR ET DIRECTEUR (ASS) | 218 |
| CHAPEAU | 2D-2633 | 1 | PNEU - GROUPE DE VALVE | 267 |
| CHAPEAU (TIGE DE SOUPAPE) | 2D-2633 | 1 | PNEU - GROUPE DE VALVE | 266 |
| CLAPET DE DECHARGE (PURGEUR D'AIR) | 5F-5434 | 1 | MONTAGE D'ESSIEU (ASS) | 237 |
| CREPINE | 7T-2651 | 1 | BOÎTE POWER SHIFT (ASS) | 254 |
| CREPINE (CARTER DE BOITE DE VITESSES) | 7T-2651 | 1 | BOÎTE MÉCANIQUE (ASS) | 250 |
| FILTRE À HUILE (ENS) (BOîTE DE VITESSES) | 119-4740 | 1 | BOITE MECANIQUE (VERSION) | 247 |
| | | 1 | BOÎTE POWER SHIFT (VERSION) | 247 |
| JOINT TORIQUE | 5P-6718 | 1 | BOÎTE POWER SHIFT (ASS) | 256 |
| RENIFLARD | 7T-3251 | 1 | BOÎTE POWER SHIFT (ASS) | 256 |
| RENIFLARD (BOîTE DE VITESSES) | 7T-3251 | 1 | BOÎTE MÉCANIQUE (ASS) | 249 |
| RENIFLARD (ESSIEU) | 197-9155 | 1 | ESSIEU MOTEUR ET DIRECTEUR (ASS) | 218 |

# PIEZAS DE MANTENIMIENTO

| DESCRIPCION | NUMERO DE PIEZA | CANT | SE UTILIZA EN | PAGINA |
|---|---|---|---|---|
| **BASTIDOR Y CAJA** | | | | |
| CONEXIÓN DE ENGRASE (ROSCA DE 1/8-27) | 3B-8488 | 2 | BASTIDOR DE DESPLAZAMIENTO LATERAL (GR) | 324 |
| | 3B-8489 | 2 | BASTIDOR DE DESPLAZAMIENTO LATERAL (GR) | 324 |
| **EQUIPOS Y SUMINISTRO DE SERVICIOS** | | | | |
| CANDADO (GR) | 5P-8502 | 2 | TRABA CONTRA EL VANDALISMO (GR) | 802 |
| | | 3 | TRABA CONTRA EL VANDALISMO (GR) | 803 |
| LLAVE | 5P-8500 | 1 | TRABA CONTRA EL VANDALISMO (GR) | 803 |
| MANGUITO | 8Y-6364 | 1 | TRABA CONTRA EL VANDALISMO (GR) | 803 |
| **HERRAMIENTAS** | | | | |
| ACOPLAMIENTO HIDRÁULICO | 8B-7121 | 1 | ACOPLADOR RÁPIDO (GR) | 678 |
| CONEXIÓN DE ENGRASE | 3B-8489 | 2 | CUCHARÓN DE USO MÚLTIPLE (GR) | 668 |
| | | 2 | CUCHARÓN DE USO MÚLTIPLE (GR) | 674 |
| | | 2 | CUCHARÓN DE USO MÚLTIPLE (GR) | 675 |
| CONEXIÓN DE ENGRASE (ROSCA DE 1/8-27) | 3B-8489 | 2 | CUCHARÓN DE USO MÚLTIPLE (GR) | 666 |
| | | 2 | CUCHARÓN DE USO MÚLTIPLE (GR) | 667 |
| | | 2 | CUCHARÓN DE USO MÚLTIPLE (GR) | 669 |
| | | 2 | MONTAJE DEL CUCHARÓN (GR) | 689 |
| **IMPLEMENTOS** | | | | |
| CONEXIÓN DE ENGRASE | 3B-8488 | 3 | PLUMA (GR) | 588 |
| | 3B-8489 | 2 | MONTAJE DEL BRAZO (GR) | 604 |
| | | 5 | VARILLAJE DEL CUCHARÓN RETROEXCAVADOR (GR) | 596 |
| CONEXIÓN DE ENGRASE (ROSCA DE 1/8-27) | 3B-8488 | 1 | BRAZO DE RETROEXCAVADOR (GR) | 613 |
| | 3B-8489 | 2 | BRAZO DE RETROEXCAVADOR (GR) | 613 |
| | | 1 | BRAZO EXTENSIBLE (GR) | 609 |
| | | 1 | BRAZO EXTENSIBLE (GR) | 611 |
| **MOTOR BÁSICO** | | | | |
| MANGUERA (RESPIRADERO) | 198-8645 | 1 | TAPA DEL MECANISMO DE VÁLVULAS (GR) | 25 |
| RESORTE (RESPIRADERO DE MANGUERA) | 162-1565 | 1 | TAPA DEL MECANISMO DE VÁLVULAS (GR) | 25 |
| TAPON DE DRENAJE DE SUMIDERO | 7C-0351 | 2 | CÁRTER - COLECTOR DEL (GR) | 43 |

# PIEZAS DE MANTENIMIENTO

| DESCRIPCION | NUMERO DE PIEZA | CANT | SE UTILIZA EN | PAGINA |
|---|---|---|---|---|
| **PUESTO DEL OPERADOR** | | | | |
| CORREA TRAPEZOIDAL (COMPRESOR DE AIRE ACONDICIONADO) | 1W-2934 | 1 | COMPRESOR DE REFRIGERANTE (GR) | 715 |
| FILTRO | 206-7514 | 1 | ACONDICIONADOR DE AIRE Y MONTAJE (GR) | 698 |
| | | 1 | CALEFACCIÓN Y MONTAJE DE LA CABINA (GR) | 741 |
| FILTRO DE AIRE | 170-7272 | 1 | CALEFACCIÓN DE LA CABINA (GR) | 743 |
| FILTRO DE AIRE (AIRE DE LA CABINA) | 170-7272 | 1 | ACONDICIONADOR DE AIRE (GR) | 700 |
| HOJA DE LIMPIAPARABRISAS | 5C-8813 | 1 | LIMPIAPARABRISAS DE LA VENTANA (GR) | 797 |
| HOJA DE LIMPIAPARABRISAS (CONJ) | 102-2940 | 2 | LIMPIAPARABRISAS DE LA VENTANA (GR) | 797 |
| JUEGO DE CORREAS TRAPEZOIDALES (INCLUYE 2 CORREAS) | 3N-1491 | 1 | CABINA (CONFIG) | 704 |
| | | 1 | SISTEMA ROPS DE CABINA CERRADA (CONFIG) | 706 |
| | 5L-3308 | 1 | CABINA (CONFIG) | 703 |
| | | 1 | SISTEMA ROPS DE CABINA CERRADA (CONFIG) | 705 |
| | | 1 | TECHO (CONFIG) | 711 |
| LÁMPARA (12 VOLTIOS) | 122-7137 | 1 | TACÓMETRO ELÉCTRICO (GR) | 781 |
| | | 1 | TACÓMETRO ELÉCTRICO (GR) | 782 |
| LÁMPARA (12 VOLTIOS) (MINIATURA) | 189-3610 | 1 | MÓDULO INDICADOR DE ADVERTENCIA (GR) | 753 |
| LÁMPARA (12 VOLTIOS, 10 VATIOS) | 6R-7490 | 1 | INSONORIZADOR (GR) | 776 |
| **SISTEMA DE ADMISIÓN Y ESCAPE** | | | | |
| INDICADOR DE CAMBIO DE FILTRO DE ACEITE (GR) | 8N-2694 | 1 | INDICADOR DE CAMBIO DE FILTRO DE ACEITE (GR) | 78 |
| **SISTEMA DE COMBUSTIBLE** | | | | |
| ELEMENTO DE FILTRO (COMBUSTIBLE) | 228-9130 | 1 | BOMBA DE CEBADO DE COMBUSTIBLE (GR) | 98 |
| ELEMENTO DE FILTRO DE COMBUSTIBLE (CONJ) | 1R-1804 | 1 | FILTRO DE COMBUSTIBLE (GR) | 88 |
| TAPA PARA EL COMBUSTIBLE | 201-0330 | 1 | COMBUSTIBLE - TANQUE DE (GR) | 102 |
| **SISTEMA DE ENFRIAMIENTO** | | | | |
| REGULADOR DE TEMPERATURA DEL AGUA | 225-6908 | 1 | AGUA - CONEXIÓN DE (GR) | 53 |
| SELLO ANULAR (REGULADOR DE TEMPERATURA DEL AGUA) | 225-6909 | 1 | AGUA - CONEXIÓN DE (GR) | 53 |
| TAPÓN (CONJ) (RADIADOR) | 227-4376 | 1 | RADIADOR Y ENFRIADOR DE ACEITE HIDRÁULICO (GR) | 69 |
| | | 1 | RADIADOR Y ENFRIADOR DE ACEITE HIDRÁULICO (GR) | 72 |
| TAPÓN (TUBERIAS DE FILTRO DE ACEITE DEL MOTOR) | 225-7941 | 1 | ENFRIADOR DE ACEITE DEL MOTOR Y BASE DEL FILTRO | 54 |
| **SISTEMA DE LUBRICACIÓN** | | | | |
| FILTRO DE ACEITE DEL MOTOR (CONJ) | 7W-2326 | 1 | TUBO DE LLENADO DE ACEITE (GR) | 51 |
| **SISTEMA ELÉCTRICO Y DE ARRANQUE** | | | | |

# PIEZAS DE MANTENIMIENTO

| DESCRIPCION | NUMERO DE PIEZA | CANT | SE UTILIZA EN | PAGINA |
|---|---|---|---|---|
| BATERÍA (12 VOLTIOS) | 3T-5760 | 2 | BATERÍA (GR) | 104 |
| | | 1 | BATERÍA (GR) | 106 |
| | | 1 | BATERÍA (GR) | 108 |
| | 230-6368 | 1 | BATERÍA (GR) | 110 |
| BUJÍA INCANDESCENTE | 232-6662 | 4 | BUJÍA INCANDESCENTE (GR) | 113 |
| CRISTAL | 8I-4721 | 1 | REFLECTOR (GR) | 117 |
| CRISTAL (AMBAR) | 9X-8121 | 1 | LÁMPARA DE BALIZA DE ADVERTENCIA (GR) | 131 |
| | | 1 | LÁMPARA DE BALIZA DE ADVERTENCIA (GR) | 132 |
| | 100-3250 | 1 | LÁMPARA DE LUZ DELANTERA Y DE SEÑAL (GR) | 120 |
| | | 1 | LÁMPARA DE LUZ DELANTERA Y DE SEÑAL (GR) | 122 |
| CRISTAL (SEÑAL DE PARADA/GIRO) | 092-6279 | 1 | LUCES DE PARADA Y COLA (GR) | 130 |
| CRISTAL (TRANSPARENTE) | 176-0346 | 1 | LUCES DE REFLECTOR (GR) | 138 |
| CRISTAL (TRANSPARENTE) (REFLECTOR) | 176-0346 | 1 | LUCES DE REFLECTOR (GR) | 136 |
| FUSIBLE (10 A) | 113-8490 | 1 | CABLES DE CONTROL DE AMORTIGUACIÓN (GR) | 208 |
| | | 1 | CABLES DE CONTROL DE AMORTIGUACIÓN (GR) | 210 |
| | | 1 | CABLES DE CONTROL DE AMORTIGUACIÓN (GR) | 212 |
| | | 1 | CABLES DE LA CABINA (GR) | 181 |
| | | 1 | CABLES DEL ACONDICIONADOR DE AIRE (GR) | 173 |
| | | 1 | CABLES DEL RECEPTÁCULO DE FUERZA (GR) | 202 |
| | | 2 | LUCES DE REFLECTOR (GR) | 133 |
| | | 2 | LUCES DE REFLECTOR (GR) | 138 |
| FUSIBLE (10-AMPERIOS) | 113-8490 | 1 | CABLES DE CONTROL DE AMORTIGUACIÓN (GR) | 206 |
| | 3K-8782 | 1 | LÁMPARA DE BALIZA DE ADVERTENCIA (GR) | 131 |
| | | 1 | LÁMPARA DE BALIZA DE ADVERTENCIA (GR) | 132 |
| | 113-8490 | 2 | LUCES DE REFLECTOR (GR) | 142 |
| FUSIBLE (15 A) | 113-8491 | 3 | LUCES DE REFLECTOR (GR) | 133 |
| | | 2 | LUCES DE REFLECTOR (GR) | 136 |
| | | 2 | LUCES DE REFLECTOR (GR) | 138 |
| FUSIBLE (15 AMPERIOS) | 113-8491 | 2 | LUCES DE REFLECTOR (GR) | 140 |
| | | 2 | LUCES DE REFLECTOR (GR) | 142 |
| FUSIBLE (20 A) | 113-8492 | 2 | CABLES DE LA CABINA (GR) | 178 |
| FUSIBLE (5 AMP) | 141-2759 | 1 | CABLES DE LA CABINA (GR) | 178 |
| | | 1 | CABLES DE LA DIRECCIÓN (GR) | 217 |
| LÁMPARA (CONJ) (ADVERTENCIA DE ROTACIÓN) | 185-7016 | 1 | LÁMPARA DE BALIZA DE ADVERTENCIA (GR) | 132 |
| LÁMPARA (CONJ) (12 VOLTIOS) | 165-5655 | 1 | INSTALACION DE SEGURIDAD (GR) | 115 |
| LÁMPARA DE FARO DELANTERO (12 VOLTIOS) | 9W-3324 | 1 | LÁMPARA DE LUZ DELANTERA Y DE SEÑAL (GR) | 124 |
| | | 1 | LÁMPARA DE LUZ DELANTERA Y DE SEÑAL (GR) | 126 |

# PIEZAS DE MANTENIMIENTO

| DESCRIPCION | NUMERO DE PIEZA | CANT | SE UTILIZA EN | PAGINA |
|---|---|---|---|---|
| LÁMPARA DE FARO DELANTERO (12 VOLTIOS, 60/55 VATIOS) | 9W-3324 | 1 | LÁMPARA DE LUZ DELANTERA Y DE SEÑAL (GR) | 120 |
| | | 1 | LÁMPARA DE LUZ DELANTERA Y DE SEÑAL (GR) | 122 |
| LÁMPARA (12 V) | 195-9712 | 1 | LAMPARA DE PLACA DE REGISTRO (GR) | 128 |
| LÁMPARA (12 VOLTIOS) | 7X-9065 | 1 | CABLES DE LA CONSOLA (GR) | 185 |
| LÁMPARA (12 VOLTIOS) (MEDIDOR DE TEMPERATURA DEL REFRIGERANTE) | 7X-9065 | 1 | CABLES DE LA CONSOLA (GR) | 187 |
| LÁMPARA (12 VOLTIOS) (MINIATURA) | 100-3246 | 2 | LÁMPARA DE LUZ DELANTERA Y DE SEÑAL (GR) | 124 |
| | | 2 | LÁMPARA DE LUZ DELANTERA Y DE SEÑAL (GR) | 126 |
| LÁMPARA (12 VOLTIOS) (NIVEL DE COMBUSTIBLE) | 7X-9065 | 1 | CABLES DE LA CONSOLA (GR) | 187 |
| LÁMPARA (12 VOLTIOS) (TEMPERATURA DE ACEITE DEL CONVERTIDOR) | 7X-9065 | 1 | CABLES DE LA CONSOLA (GR) | 187 |
| LÁMPARA (12 VOLTIOS) (VOLTIMETRO) | 7X-9065 | 1 | CABLES DE LA CONSOLA (GR) | 187 |
| LÁMPARA (12 VOLTIOS, 21 VATIOS) | 5G-3244 | 1 | LÁMPARA DE LUZ DELANTERA Y DE SEÑAL (GR) | 120 |
| | | 1 | LÁMPARA DE LUZ DELANTERA Y DE SEÑAL (GR) | 122 |
| LÁMPARA (12 VOLTIOS) (21 VATIOS) | 5G-3244 | 1 | LÁMPARA DE LUZ DELANTERA Y DE SEÑAL (GR) | 124 |
| | | 1 | LÁMPARA DE LUZ DELANTERA Y DE SEÑAL (GR) | 126 |
| LÁMPARA (12 VOLTIOS, 4 VATIOS) | 100-3246 | 1 | LÁMPARA DE LUZ DELANTERA Y DE SEÑAL (GR) | 120 |
| | | 1 | LÁMPARA DE LUZ DELANTERA Y DE SEÑAL (GR) | 122 |
| LÁMPARA (12 VOLTIOS, 55 VATIOS) | 9W-0607 | 1 | LUCES DE REFLECTOR (GR) | 136 |
| | 9X-8118 | 1 | LÁMPARA DE BALIZA DE ADVERTENCIA (GR) | 131 |
| | | 1 | LÁMPARA DE BALIZA DE ADVERTENCIA (GR) | 132 |
| | 9W-0607 | 1 | LUCES DE REFLECTOR (GR) | 140 |
| | | 1 | LUCES DE REFLECTOR (GR) | 142 |
| | | 1 | REFLECTOR (GR) | 118 |
| | | 1 | REFLECTOR (GR) | 119 |
| LÁMPARA (12 VOLTIOS, 55 VATIOS) (REFLECTOR) | 9W-0607 | 1 | LUCES DE REFLECTOR (GR) | 136 |
| LÁMPARA (12 VOLTIOS/21 VATIOS) | 5G-3244 | 1 | REFLECTOR (GR) | 117 |
| LÁMPARA (12 VOLTIOS/21 VATIOS) (SEÑAL DE VIRAJE) | 3C-4883 | 1 | LUCES DE PARADA Y COLA (GR) | 130 |
| LÁMPARA (12 VOLTIOS/21/5 VATIOS) (PARADA) | 3C-6516 | 1 | LUCES DE PARADA Y COLA (GR) | 130 |
| LÁMPARA (12 VOLTIOS)(55 VATIOS) | 9W-0607 | 1 | LUCES DE REFLECTOR (GR) | 133 |
| LÁMPARA (12 VOLTIOS/55 VATIOS) | 9W-0607 | 1 | LUCES DE REFLECTOR (GR) | 138 |
| LENTE AMBAR | 100-3250 | 1 | LÁMPARA DE LUZ DELANTERA Y DE SEÑAL (GR) | 124 |
| | | 1 | LÁMPARA DE LUZ DELANTERA Y DE SEÑAL (GR) | 126 |

# PIEZAS DE MANTENIMIENTO

| DESCRIPCION | NUMERO DE PIEZA | CANT | SE UTILIZA EN | PAGINA |
|---|---|---|---|---|
| MANDO DE CORREA (BALIZA GIRATORIA DE ADVERTENCIA) | 9X-8139 | 1 | LÁMPARA DE BALIZA DE ADVERTENCIA (GR) | 131 |
| | | 1 | LÁMPARA DE BALIZA DE ADVERTENCIA (GR) | 132 |
| PORTAESCOBILLAS (CONJ) | 7T-6092 | 1 | MOTOR DE ARRANQUE ELÉCTRICO (GR) | 166 |
| REFLECTOR | 9R-1499 | 2 | LUCES DE DESPLAZAMIENTO (GR) | 146 |
| | | 2 | LUCES DE DESPLAZAMIENTO (GR) | 149 |
| | | 2 | LUCES DE DESPLAZAMIENTO (GR) | 152 |
| | | 2 | LUCES DE DESPLAZAMIENTO (GR) | 155 |
| | | 2 | LUCES DE DESPLAZAMIENTO (GR) | 158 |
| VIDRIO (CONJ) | 100-3248 | 1 | LÁMPARA DE LUZ DELANTERA Y DE SEÑAL (GR) | 120 |
| | | 1 | LÁMPARA DE LUZ DELANTERA Y DE SEÑAL (GR) | 124 |
| | | 1 | LÁMPARA DE LUZ DELANTERA Y DE SEÑAL (GR) | 126 |
| | 100-3249 | 1 | LÁMPARA DE LUZ DELANTERA Y DE SEÑAL (GR) | 122 |
| | 136-3848 | 1 | LÁMPARA DE LUZ DELANTERA Y DE SEÑAL (GR) | 124 |
| | | 1 | LÁMPARA DE LUZ DELANTERA Y DE SEÑAL (GR) | 126 |
| VIDRIO (CONJ) (FARO) | 202-6611 | 1 | REFLECTOR (GR) | 119 |
| VIDRIO (CONJ) (REFLECTOR) | 202-6614 | 1 | REFLECTOR (GR) | 118 |

# PIEZAS DE MANTENIMIENTO

| DESCRIPCION | NUMERO DE PIEZA | CANT | SE UTILIZA EN | PAGINA |
|---|---|---|---|---|
| **SISTEMA HIDRÁULICO** | | | | |
| CONEXIÓN DE ENGRASE (ROSCA DE 1/8-27) | 3B-8489 | 4 | MONTAJE DE CILINDRO (GR) | 527 |
| FILTRO | 4T-4520 | 1 | VÁLVULA DE CONTROL (GR) | 559 |
| | | 1 | VÁLVULA DE CONTROL (GR) | 561 |
| | | 1 | VÁLVULA DE CONTROL (GR) | 563 |
| | | 1 | VÁLVULA DE CONTROL (GR) | 565 |
| | | 1 | VÁLVULA DE CONTROL (GR) | 567 |
| | | 1 | VÁLVULA DE CONTROL (GR) | 569 |
| | | 1 | VÁLVULA DE CONTROL (GR) | 571 |
| | | 1 | VÁLVULA DE CONTROL (GR) | 573 |
| | | 1 | VÁLVULA DE CONTROL (GR) | 575 |
| | | 1 | VÁLVULA DE CONTROL (GR) | 577 |
| FILTRO DE ACEITE (CONJ) (HIDRAULICO) (RESISTENTE AL FUEGO) | 134-3014 | 1 | HIDRÁULICA (CONFIG) | 396 |
| | | 1 | HIDRÁULICA (CONFIG) | 397 |
| FILTRO DE ACEITE (CONJ) (LIMPIEZA/ALTA EFICIENCIA) | 126-1817 | 1 | HIDRÁULICA (CONFIG) | 396 |
| | | 1 | HIDRÁULICA (CONFIG) | 397 |
| FILTRO (RESPIRADERO DEL TANQUE) | 9R-9925 | 1 | TANQUE HIDRÁULICO (GR) | 539 |
| SELLO ANULAR | 2M-9780 | 1 | TUBERÍAS DE LA PALANCA EXTENDIBLE (GR) | 445 |
| TAPA CONTRA EL POLVO | 6V-0852 | 1 | CONECTOR DE VALVULA (GR) | 347 |
| | | 1 | TUBERÍAS CON SERVOMANDO (GR) | 474 |
| TAPA, LLENADO (TANQUE HIDRÁULICO) | 237-3797 | 1 | TANQUE HIDRÁULICO (GR) | 539 |
| TAPÓN (CONJ) | 6V-9830 | 2 | TUBERIAS DE AUXILIAR DE CARGADOR (GR) | 462 |
| | 6V-9831 | 2 | CILINDRO DE LEVANTAMIENTO - TUBERÍAS DEL (GR) | 446 |
| | | 2 | TUBERIAS DE VALVULA DE CONTROL DE CARGA (GR) | 459 |
| **TREN DE FUERZA** | | | | |
| COLADOR | 7T-2651 | 1 | SERVOTRANSMISIÓN (GR) | 254 |
| COLADOR (CAJA DE TRANSMISION) | 7T-2651 | 1 | TRANSMISIÓN DIRECTA (GR) | 250 |
| FILTRO DE ACEITE (CONJ) (TRANSMISION) | 119-4740 | 1 | SERVOTRANSMISIÓN (CONFIG) | 247 |
| | | 1 | TRANSMISION DIRECTA (CONFIG) | 247 |
| RESPIRADERO | 7T-3251 | 1 | SERVOTRANSMISIÓN (GR) | 256 |
| RESPIRADERO (EJE) | 197-9155 | 1 | EJE DE IMPULSIÓN Y DE DIRECCIÓN (GR) | 218 |
| RESPIRADERO (TRANSMISION) | 7T-3251 | 1 | TRANSMISIÓN DIRECTA (GR) | 249 |
| SELLO ANULAR | 5P-6718 | 1 | SERVOTRANSMISIÓN (GR) | 256 |
| TAPA | 2D-2633 | 1 | VÁLVULA DEL NEUMÁTICO (GR) | 267 |
| TAPA (VASTAGO DE LA VÁLVULA) | 2D-2633 | 1 | VÁLVULA DEL NEUMÁTICO (GR) | 266 |
| TAPON CONJ-MAGNETICO | 152-6144 | 1 | DIFERENCIAL Y CORONA (GR) | 227 |
| | | 3 | EJE DE IMPULSIÓN Y DE DIRECCIÓN (GR) | 218 |
| TAPÓN MAGNÉTICO | 9R-6602 | 2 | EJE TRASERO (GR) | 222 |
| VALVULA (RESPIRADERO DE AIRE) | 5F-5434 | 1 | EJE - GRUPO DE MONTAJE | 237 |

# PEÇAS DE MANUTENÇÃO

| DESCRIÇÃO | NÚMERO DE PEÇA | QUANT | UTILIZADA EM | PÁGINA |
|---|---|---|---|---|
| **ACESSÓRIOS** | | | | |
| GRAXEIRA | 3B-8488 | 3 | LANÇA | 588 |
| | 3B-8489 | 5 | ARTICULAÇÃO DA CAÇAMBA DA RETROESCAVADEIRA | 596 |
| | | 2 | MONTAGEM - BRAÇO | 604 |
| GRAXEIRA (ROSCA 1/8-27 POL) | 3B-8488 | 1 | BRAÇO - CAÇAMBA RETRO-ESCAVADORA | 613 |
| | 3B-8489 | 2 | BRAÇO - CAÇAMBA RETRO-ESCAVADORA | 613 |
| | | 1 | BRAÇO ESTENDÍVEL | 609 |
| | | 1 | BRAÇO ESTENDÍVEL | 611 |
| **CHASSI E CARCAÇA** | | | | |
| GRAXEIRA (ROSCA 1/8-27 POL) | 3B-8488 | 2 | ARMAÇÃO DESLIZANTE | 324 |
| | 3B-8489 | 2 | ARMAÇÃO DESLIZANTE | 324 |
| **EQUIPAMENTOS DE SERVIÇO E SUPRIMENTOS** | | | | |
| CADEADO | 5P-8502 | 2 | CADEADO CONTRA VANDALISMO | 802 |
| | | 3 | CADEADO CONTRA VANDALISMO | 803 |
| CHAVE | 5P-8500 | 1 | CADEADO CONTRA VANDALISMO | 803 |
| LUVA | 8Y-6364 | 1 | CADEADO CONTRA VANDALISMO | 803 |
| **FERRAMENTAS DE TRABALHO** | | | | |
| CONEXÃO HIDRÁULICA | 8B-7121 | 1 | ACOPLADOR RÁPIDO | 678 |
| GRAXEIRA | 3B-8489 | 2 | CAÇAMBA DE MÚLTIPLAS APLICAÇÕES | 668 |
| | | 2 | CAÇAMBA DE MÚLTIPLAS APLICAÇÕES | 674 |
| | | 2 | CAÇAMBA DE MÚLTIPLAS APLICAÇÕES | 675 |
| GRAXEIRA (ROSCA 1/8-27 POL) | 3B-8489 | 2 | CAÇAMBA DE MÚLTIPLAS APLICAÇÕES | 666 |
| | | 2 | CAÇAMBA DE MÚLTIPLAS APLICAÇÕES | 667 |
| | | 2 | CAÇAMBA DE MÚLTIPLAS APLICAÇÕES | 669 |
| | | 2 | MONTAGEM - CAÇAMBA | 689 |
| **MOTOR BÁSICO** | | | | |
| BUJÃO - DRENAGEM DO RESERVATÓRIO | 7C-0351 | 2 | CÁRTER DO ÓLEO DO MOTOR | 43 |
| MANGUEIRA (RESPIRO) | 198-8645 | 1 | TAMPA - MECANISMO DAS VÁLVULAS | 25 |
| MOLA (MANGUEIRA DO RESPIRO) | 162-1565 | 1 | TAMPA - MECANISMO DAS VÁLVULAS | 25 |

# PEÇAS DE MANUTENÇÃO

| DESCRIÇÃO | NÚMERO DE PEÇA | QUANT | UTILIZADA EM | PÁGINA |
|---|---|---|---|---|
| **POSTO DO OPERADOR** | | | | |
| CORREIA EM V (COMPRESSOR DE CONDIC. DE AR) | 1W-2934 | 1 | COMPRESSOR DE REFRIGERANTE | 715 |
| FILTRO | 206-7514 | 1 | AQUECEDOR DA CABINE E MONTAGEM | 741 |
| | | 1 | CONDICIONADOR DE AR E MONTAGEM | 698 |
| FILTRO - AR | 170-7272 | 1 | AQUECEDOR DA CABINE | 743 |
| FILTRO - AR (AR DA CABINE) | 170-7272 | 1 | CONDICIONADOR DE AR | 700 |
| JOGO DE CORREIAS EM V (INCLUI 2 CORREIAS) | 3N-1491 | 1 | CABINE | 704 |
| | | 1 | CABINE - ESTRUTURA ROPS COBERTA | 706 |
| | 5L-3308 | 1 | CABINE | 703 |
| | | 1 | CABINE - ESTRUTURA ROPS COBERTA | 705 |
| | | 1 | TOLDO | 711 |
| LÂMINA | 102-2940 | 2 | LIMPADOR DO VIDRO | 797 |
| LÂMINA DO LIMPADOR DE PÁRA-BRISA | 5C-8813 | 1 | LIMPADOR DO VIDRO | 797 |
| LÂMPADA (12 V) | 122-7137 | 1 | TACÔMETRO - ELÉTRICO | 781 |
| | | 1 | TACÔMETRO - ELÉTRICO | 782 |
| LÂMPADA (12 V) (MINIATURA) | 189-3610 | 1 | MÓDULO - INDICADOR DE ALARME | 753 |
| LÂMPADA (12 VOLTS, 10 WATTS) | 6R-7490 | 1 | REDUÇÃO DE RUÍDO | 776 |
| **SISTEMA DE ADMISSÃO E ESCAPE DE AR** | | | | |
| INDICADOR - TROCA DO FILTRO DE AR | 8N-2694 | 1 | INDICADOR - TROCA DO FILTRO DE AR | 78 |
| **SISTEMA DE ARREFECIMENTO** | | | | |
| REGULADOR DE TEMPERATURA DA ÁGUA | 225-6908 | 1 | CONEXÃO - TUBO D'ÁGUA | 53 |
| RETENTOR DE ANEL-O (REGULADOR DA TEMPERATURA DA ÁGUA) | 225-6909 | 1 | CONEXÃO - TUBO D'ÁGUA | 53 |
| TAMPA (RADIADOR) | 227-4376 | 1 | RADIADOR E ARREFECEDOR DO ÓLEO HIDRÁULICO | 69 |
| | | 1 | RADIADOR E ARREFECEDOR DO ÓLEO HIDRÁULICO | 72 |
| TAMPÃO (TUBULAÇÕES DO FILTRO DE ÓLEO DO MOTOR) | 225-7941 | 1 | ARREFECEDOR DE ÓLEO DO MOTOR E BASE DO FILTRO | 54 |
| **SISTEMA DE LUBRIFICAÇÃO** | | | | |
| FILTRO - ÓLEO DO MOTOR | 7W-2326 | 1 | BOCAL DE ENCHIMENTO DE ÓLEO DO MOTOR | 51 |
| **SISTEMA DO COMBUSTÍVEL** | | | | |
| ELEMENTO - FILTRANTE (COMBUSTÍVEL) | 228-9130 | 1 | BOMBA DE ESCORVA DO COMBUSTÍVEL | 98 |
| ELEMENTO - FILTRO DE COMBUSTÍVEL | 1R-1804 | 1 | FILTRO - COMBUSTÍVEL | 88 |
| TAMPA - TANQUE DE COMBUSTÍVEL | 201-0330 | 1 | TANQUE DE COMBUSTÍVEL | 102 |
| **SISTEMA ELÉTRICO DE PARTIDA** | | | | |
| BATERIA (12 V) | 3T-5760 | 2 | BATERIA | 104 |
| | | 1 | BATERIA | 106 |
| | | 1 | BATERIA | 108 |

# PEÇAS DE MANUTENÇÃO

| DESCRIÇÃO | NÚMERO DE PEÇA | QUANT | UTILIZADA EM | PÁGINA |
|---|---|---|---|---|
| | 230-6368 | 1 | BATERIA | 110 |
| CORREIA DE COMANDO (PISCA-PISCA DE ADVERTÊNCIA) | 9X-8139 | 1 | LUZ GIRATÓRIA DE ALARME | 131 |
| | | 1 | LUZ GIRATÓRIA DE ALARME | 132 |
| FAROL DIANTEIRO (12 V) | 9W-3324 | 1 | LÂMPADA DIANTEIRA E DE SINAL | 124 |
| | | 1 | LÂMPADA DIANTEIRA E DE SINAL | 126 |
| FAROL DIANTEIRO (12-VOLTS, 60/55 WATTS) | 9W-3324 | 1 | LÂMPADA DIANTEIRA E DE SINAL | 120 |
| | | 1 | LÂMPADA DIANTEIRA E DE SINAL | 122 |
| FUSÍVEL (10 A) | 113-8490 | 1 | CABOS/FIOS ELÉTRICOS - ABSORÇÃO DE IMPACTOS | 208 |
| | | 1 | CABOS/FIOS ELÉTRICOS - ABSORÇÃO DE IMPACTOS | 210 |
| | | 1 | CABOS/FIOS ELÉTRICOS - ABSORÇÃO DE IMPACTOS | 212 |
| | | 1 | CABOS/FIOS ELÉTRICOS - AR CONDICIONADO | 173 |
| | | 1 | CABOS/FIOS ELÉTRICOS - CABINE | 181 |
| | | 1 | CABOS/FIOS ELÉTRICOS - TOMADA DE FORÇA | 202 |
| | | 2 | SISTEMA DE ILUMINAÇÃO - FARÓIS | 133 |
| | | 2 | SISTEMA DE ILUMINAÇÃO - FARÓIS | 138 |
| FUSÍVEL (10 AMPERES) | 3K-8782 | 1 | LUZ GIRATÓRIA DE ALARME | 131 |
| | | 1 | LUZ GIRATÓRIA DE ALARME | 132 |
| | 113-8490 | 1 | CABOS/FIOS ELÉTRICOS - ABSORÇÃO DE IMPACTOS | 206 |
| | | 2 | SISTEMA DE ILUMINAÇÃO - FARÓIS | 142 |
| FUSÍVEL (15 A) | 113-8491 | 3 | SISTEMA DE ILUMINAÇÃO - FARÓIS | 133 |
| | | 2 | SISTEMA DE ILUMINAÇÃO - FARÓIS | 136 |
| | | 2 | SISTEMA DE ILUMINAÇÃO - FARÓIS | 138 |
| FUSÍVEL (15 AMPERES) | 113-8491 | 2 | SISTEMA DE ILUMINAÇÃO - FARÓIS | 140 |
| | | 2 | SISTEMA DE ILUMINAÇÃO - FARÓIS | 142 |
| FUSÍVEL (20 A) | 113-8492 | 2 | CABOS/FIOS ELÉTRICOS - CABINE | 178 |
| FUSÍVEL (5 AMP) | 141-2759 | 1 | CABOS/FIOS ELÉTRICOS - CABINE | 178 |
| | | 1 | CABOS/FIOS ELÉTRICOS - DIREÇÃO | 217 |
| LÂMPADA (ALERTA GIRATÓRIO) | 185-7016 | 1 | LUZ GIRATÓRIA DE ALARME | 132 |
| LÂMPADA (12 V) | 195-9712 | 1 | LAMPADA-PLACA DE REGISTRO | 128 |
| LÂMPADA (12 V) (MINIATURA) | 100-3246 | 2 | LÂMPADA DIANTEIRA E DE SINAL | 126 |
| | | 2 | LÂMPADA DIANTEIRA E DE SINAL | 124 |
| LÂMPADA (12 V) (21 WATT) | 5G-3244 | 1 | LÂMPADA DIANTEIRA E DE SINAL | 126 |
| | | 1 | LÂMPADA DIANTEIRA E DE SINAL | 124 |
| LÂMPADA (12-VOLTS) | 7X-9065 | 1 | CABOS/FIOS ELÉTRICOS DO CONSOLE | 185 |
| | 165-5655 | 1 | INSTALAÇÃO-SEGURANÇA | 115 |
| LÂMPADA (12 VOLTS - 55 WATTS) | 9W-0607 | 1 | SISTEMA DE ILUMINAÇÃO - FARÓIS | 133 |
| LÂMPADA (12-VOLTS) (MEDIDOR DA TEMPERATURA DO LÍQUIDO ARREFECEDOR) | 7X-9065 | 1 | CABOS/FIOS ELÉTRICOS DO CONSOLE | 187 |
| LÂMPADA (12-VOLTS) (NÍVEL DO COMBUSTÍVEL) | 7X-9065 | 1 | CABOS/FIOS ELÉTRICOS DO CONSOLE | 187 |
| LÂMPADA (12-VOLTS) (TEMPERATURA DO ÓLEO DO CONVERSOR) | 7X-9065 | 1 | CABOS/FIOS ELÉTRICOS DO CONSOLE | 187 |
| LÂMPADA (12-VOLTS) (VOLTÍMETRO) | 7X-9065 | 1 | CABOS/FIOS ELÉTRICOS DO CONSOLE | 187 |

# PEÇAS DE MANUTENÇÃO

| DESCRIÇÃO | NÚMERO DE PEÇA | QUANT | UTILIZADA EM | PÁGINA |
|---|---|---|---|---|
| LÂMPADA (12-VOLTS, 21-WATTS) | 5G-3244 | 1 | LÂMPADA DIANTEIRA E DE SINAL | 120 |
| | | 1 | LÂMPADA DIANTEIRA E DE SINAL | 122 |
| LÂMPADA (12-VOLTS, 4-WATTS) | 100-3246 | 1 | LÂMPADA DIANTEIRA E DE SINAL | 120 |
| | | 1 | LÂMPADA DIANTEIRA E DE SINAL | 122 |
| LÂMPADA (12 VOLTS, 55 WATTS) | 9W-0607 | 1 | SISTEMA DE ILUMINAÇÃO - FARÓIS | 136 |
| | 9X-8118 | 1 | LUZ GIRATÓRIA DE ALARME | 132 |
| | 9W-0607 | 1 | LÂMPADA - FAROL | 118 |
| | | 1 | LÂMPADA - FAROL | 119 |
| LÂMPADA (12-VOLTS, 55-WATTS) | 9X-8118 | 1 | LUZ GIRATÓRIA DE ALARME | 131 |
| | 9W-0607 | 1 | SISTEMA DE ILUMINAÇÃO - FARÓIS | 140 |
| | | 1 | SISTEMA DE ILUMINAÇÃO - FARÓIS | 142 |
| LÂMPADA (12 VOLTS, 55 WATTS) (FAROL) | 9W-0607 | 1 | SISTEMA DE ILUMINAÇÃO - FARÓIS | 136 |
| LÂMPADA (12 VOLTS/21 WATTS) | 5G-3244 | 1 | LÂMPADA - FAROL | 117 |
| LÂMPADA (12 VOLTS/21 WATTS) (SETA DE DIREÇÃO) | 3C-4883 | 1 | LUZ TRASEIRA E DE FREIO | 130 |
| LÂMPADA (12 VOLTS/21/5 WATTS) (PARAR) | 3C-6516 | 1 | LUZ TRASEIRA E DE FREIO | 130 |
| LÂMPADA (12 VOLTS/55 WATTS) | 9W-0607 | 1 | SISTEMA DE ILUMINAÇÃO - FARÓIS | 138 |
| LENTE | 8I-4721 | 1 | LÂMPADA - FAROL | 117 |
| | 100-3248 | 1 | LÂMPADA DIANTEIRA E DE SINAL | 120 |
| | | 1 | LÂMPADA DIANTEIRA E DE SINAL | 124 |
| | | 1 | LÂMPADA DIANTEIRA E DE SINAL | 126 |
| | 100-3249 | 1 | LÂMPADA DIANTEIRA E DE SINAL | 122 |
| | 136-3848 | 1 | LÂMPADA DIANTEIRA E DE SINAL | 124 |
| | | 1 | LÂMPADA DIANTEIRA E DE SINAL | 126 |
| LENTE ÂMBAR | 100-3250 | 1 | LÂMPADA DIANTEIRA E DE SINAL | 124 |
| | | 1 | LÂMPADA DIANTEIRA E DE SINAL | 126 |
| LENTE (ÂMBER) | 9X-8121 | 1 | LUZ GIRATÓRIA DE ALARME | 131 |
| | | 1 | LUZ GIRATÓRIA DE ALARME | 132 |
| | 100-3250 | 1 | LÂMPADA DIANTEIRA E DE SINAL | 120 |
| | | 1 | LÂMPADA DIANTEIRA E DE SINAL | 122 |
| LENTE (FAROL) | 202-6614 | 1 | LÂMPADA - FAROL | 118 |
| LENTE (FAROL DIANTEIRO) | 202-6611 | 1 | LÂMPADA - FAROL | 119 |
| LENTE (SINAL DE PARADA/CURVA) | 092-6279 | 1 | LUZ TRASEIRA E DE FREIO | 130 |
| LENTE (TRANSPARENTE) | 176-0346 | 1 | SISTEMA DE ILUMINAÇÃO - FARÓIS | 138 |
| LENTE (TRANSPARENTE) (FAROL) | 176-0346 | 1 | SISTEMA DE ILUMINAÇÃO - FARÓIS | 136 |
| REFLETOR | 9R-1499 | 2 | ILUMINAÇÃO - RODOVIÁRIA | 146 |
| | | 2 | ILUMINAÇÃO - RODOVIÁRIA | 149 |
| | | 2 | ILUMINAÇÃO - RODOVIÁRIA | 152 |
| | | 2 | ILUMINAÇÃO - RODOVIÁRIA | 155 |
| | | 2 | ILUMINAÇÃO - RODOVIÁRIA | 158 |
| SUPORTE - ESCOVA | 7T-6092 | 1 | MOTOR ELÉTRICO DE PARTIDA | 166 |
| VELA DE AQUECIMENTO; VELA INCANDESCENTE | 232-6662 | 4 | VELA DE AQUECIMENTO; VELA INCANDESCENTE | 113 |

# PEÇAS DE MANUTENÇÃO

| DESCRIÇÃO | NÚMERO DE PEÇA | QUANT | UTILIZADA EM | PÁGINA |
|---|---|---|---|---|
| **SISTEMA HIDRÁULICO** | | | | |
| FILTRO | 4T-4520 | 1 | VÁLVULA DE CONTROLE | 559 |
| | | 1 | VÁLVULA DE CONTROLE | 561 |
| | | 1 | VÁLVULA DE CONTROLE | 563 |
| | | 1 | VÁLVULA DE CONTROLE | 565 |
| | | 1 | VÁLVULA DE CONTROLE | 567 |
| | | 1 | VÁLVULA DE CONTROLE | 569 |
| | | 1 | VÁLVULA DE CONTROLE | 571 |
| | | 1 | VÁLVULA DE CONTROLE | 573 |
| | | 1 | VÁLVULA DE CONTROLE | 575 |
| | | 1 | VÁLVULA DE CONTROLE | 577 |
| FILTRO - ÓLEO (HIDRÁULICO) (RESISTENTE A FOGO) | 134-3014 | 1 | COMANDO HIDRÁULICO | 396 |
| | | 1 | COMANDO HIDRÁULICO | 397 |
| FILTRO - ÓLEO (LIMPEZA / ALTA EFICIÊNCIA) | 126-1817 | 1 | COMANDO HIDRÁULICO | 396 |
| | | 1 | COMANDO HIDRÁULICO | 397 |
| FILTRO (RESPIRO DO TANQUE HIDRAULICO) | 9R-9925 | 1 | TANQUE HIDRÁULICO | 539 |
| GRAXEIRA (ROSCA 1/8-27 POL) | 3B-8489 | 4 | MONTAGEM - CILINDRO | 527 |
| RETENTOR DE ANEL-O | 2M-9780 | 1 | TUBOS - BRAÇO COM EXTENSÃO | 445 |
| TAMPA | 6V-9830 | 2 | TUBOS AUXILIARES | 462 |
| | 6V-9831 | 2 | TUBOS - CILINDRO DE LEVANTAMENTO | 446 |
| | | 2 | TUBOS - VÁLVULA DE CONTROLE DE CARGA | 459 |
| TAMPA - ENCHIMENTO (TANQUE HIDRÁULICO) | 237-3797 | 1 | TANQUE HIDRÁULICO | 539 |
| TAMPA CONTRA POEIRA | 6V-0852 | 1 | TUBOS - CIRCUITO PILOTO | 474 |
| | | 1 | VÁLVULA DO CONECTOR | 347 |
| **TREM DE FORÇA** | | | | |
| BUJÃO MAGNÉTICO | 9R-6602 | 2 | SEMI-EIXO TRASEIRO | 222 |
| FILTRO - ÓLEO (TRANSMISSÃO) | 119-4740 | 1 | SERVO-TRANSMISSÃO | 247 |
| | | 1 | TRANSMISSÃO DIRETA | 247 |
| RESPIRO | 7T-3251 | 1 | SERVOTRANSMISSÃO | 256 |
| RESPIRO (EIXO) | 197-9155 | 1 | EIXO DE PROPULSÃO E DIREÇÃO | 218 |
| RESPIRO (TRANSMISSÃO) | 7T-3251 | 1 | TRANSMISSÃO DIRETA | 249 |
| RETENTOR DE ANEL-O | 5P-6718 | 1 | SERVOTRANSMISSÃO | 256 |
| TAMPA | 2D-2633 | 1 | VÁLVULA DE PNEU | 267 |
| TAMPA (HASTE DA VALVULA) | 2D-2633 | 1 | VÁLVULA DE PNEU | 266 |
| TELA FILTRANTE | 7T-2651 | 1 | SERVOTRANSMISSÃO | 254 |
| TELA FILTRANTE (CAIXA DE TRANSMISSÃO) | 7T-2651 | 1 | TRANSMISSÃO DIRETA | 250 |
| TOMADA - MAGNETICA | 152-6144 | 1 | DIFERENCIAL E COROA | 227 |
| | | 3 | EIXO DE PROPULSÃO E DIREÇÃO | 218 |
| VÁLVULA DE ALÍVIO (RESPIRO DE AR) | 5F-5434 | 1 | MONTAGEM DO EIXO | 237 |

# WARTUNGSTEILE

| BESCHREIBUNG | ERSATZTEIL-NUMMER | MENGE | VERWENDET IN | SEITE |
|---|---|---|---|---|
| **ARBEITSGERÄTE** | | | | |
| HYDRAULIKANSCHLUSSSTÜCK | 8B-7121 | 1 | SCHNELLWECHSELEINRICHTUNG | 678 |
| SCHMIERNIPPEL | 3B-8488 | 3 | AUSLEGER | 588 |
| | 3B-8489 | 5 | HECKBAGGERLÖFFELGESTÄNGE | 596 |
| | | 2 | KOMBISCHAUFEL | 668 |
| | | 2 | KOMBISCHAUFEL | 674 |
| | | 2 | KOMBISCHAUFEL | 675 |
| | | 2 | STIELAUFHÄNGUNG | 604 |
| SCHMIERNIPPEL (1/8-27-GEWINDE) | 3B-8489 | 2 | SCHAUFELAUFHÄNGUNG | 689 |
| | 3B-8488 | 1 | LÖFFELSTIEL | 613 |
| | 3B-8489 | 2 | KOMBISCHAUFEL | 666 |
| | | 2 | KOMBISCHAUFEL | 667 |
| | | 2 | KOMBISCHAUFEL | 669 |
| | | 2 | LÖFFELSTIEL | 613 |
| | | 1 | TELESKOPSTIEL | 609 |
| | | 1 | TELESKOPSTIEL | 611 |
| **ELEKTRISCHE ANLAGE UND STARTSYSTEM** | | | | |
| ABDECKGLAS | 8I-4721 | 1 | ARBEITSLEUCHTEN | 117 |
| | 100-3248 | 1 | SCHEINWERFER U. RICHTUNGSLEUCHTE | 120 |
| | | 1 | SCHEINWERFER U. RICHTUNGSLEUCHTE | 124 |
| | | 1 | SCHEINWERFER U. RICHTUNGSLEUCHTE | 126 |
| | 100-3249 | 1 | SCHEINWERFER U. RICHTUNGSLEUCHTE | 122 |
| | 136-3848 | 1 | SCHEINWERFER U. RICHTUNGSLEUCHTE | 124 |
| | | 1 | SCHEINWERFER U. RICHTUNGSLEUCHTE | 126 |
| ABDECKGLAS (ARBEITSSCHEIN-WERFER) | 202-6611 | 1 | ARBEITSLEUCHTEN | 119 |
| | 202-6614 | 1 | ARBEITSLEUCHTEN | 118 |
| ABDECKGLAS (BREMSLICHT/RICH-TUNGSBLINKER) | 092-6279 | 1 | BREMS- UND RÜCKLEUCHTE | 130 |
| ABDECKGLAS (DURCHSICHTIG) | 176-0346 | 1 | ARBEITSLEUCHTEN | 138 |
| ABDECKGLAS (DURCHSICHTIG) (ARBEITSLEUCHTE) | 176-0346 | 1 | ARBEITSLEUCHTEN | 136 |
| ABDECKGLAS (GELB) | 9X-8121 | 1 | RUNDUM-KENNLEUCHTE | 131 |
| | | 1 | RUNDUM-KENNLEUCHTE | 132 |
| | 100-3250 | 1 | SCHEINWERFER U. RICHTUNGSLEUCHTE | 120 |
| | | 1 | SCHEINWERFER U. RICHTUNGSLEUCHTE | 122 |
| | | 1 | SCHEINWERFER U. RICHTUNGSLEUCHTE | 124 |
| | | 1 | SCHEINWERFER U. RICHTUNGSLEUCHTE | 126 |
| BATTERIE (12 V) | 3T-5760 | 2 | BATTERIE | 104 |
| | | 1 | BATTERIE | 106 |
| | | 1 | BATTERIE | 108 |
| | 230-6368 | 1 | BATTERIE | 110 |

# WARTUNGSTEILE

| BESCHREIBUNG | ERSATZTEIL-NUMMER | MENGE | VERWENDET IN | SEITE |
|---|---|---|---|---|
| BELEUCHTUNGSANLAGE (RUNDUM-KENNLEUCHTE) | 185-7016 | 1 | RUNDUM-KENNLEUCHTE | 132 |
| BELEUCHTUNGSANLAGE (12 V) | 165-5655 | 1 | SICHERHEITSEINBAUSATZ | 115 |
| BÜRSTENHALTER | 7T-6092 | 1 | STARTERMOTOR | 166 |
| GLÜHKERZE | 232-6662 | 4 | GLÜHKERZE | 113 |
| LAUFBAND UND ANTRIEB (RUNDUM-KENNLEUCHTE) | 9X-8139 | 1 | RUNDUM-KENNLEUCHTE | 131 |
| | | 1 | RUNDUM-KENNLEUCHTE | 132 |
| LEUCHTE (12 V) | 7X-9065 | 1 | KONSOLENVERDRAHTUNG | 185 |
| | 195-9712 | 1 | ZULASSUNGSSCHILDLEUCHTE | 128 |
| LEUCHTE (12 V) (KRAFTSTOFFSTAND) | 7X-9065 | 1 | KONSOLENVERDRAHTUNG | 187 |
| LEUCHTE (12 V) (KÜHLMITTELTEMPERATURANZEIGE) | 7X-9065 | 1 | KONSOLENVERDRAHTUNG | 187 |
| LEUCHTE (12 V) (MINIATURLEUCHTE) | 100-3246 | 2 | SCHEINWERFER U. RICHTUNGSLEUCHTE | 124 |
| | | 2 | SCHEINWERFER U. RICHTUNGSLEUCHTE | 126 |
| LEUCHTE (12 V) (ÖLTEMPERATURWANDLER) | 7X-9065 | 1 | KONSOLENVERDRAHTUNG | 187 |
| LEUCHTE (12 V) (SPANNUNGSMESSER) | 7X-9065 | 1 | KONSOLENVERDRAHTUNG | 187 |
| LEUCHTE (12 V) (21 W) | 5G-3244 | 1 | SCHEINWERFER U. RICHTUNGSLEUCHTE | 124 |
| | | 1 | SCHEINWERFER U. RICHTUNGSLEUCHTE | 126 |
| LEUCHTE (12 V, 21 W) | 5G-3244 | 1 | SCHEINWERFER U. RICHTUNGSLEUCHTE | 120 |
| | | 1 | SCHEINWERFER U. RICHTUNGSLEUCHTE | 122 |
| LEUCHTE (12 V/ 21W) (FAHRTRICHTUNGSANZEIGER) | 3C-4883 | 1 | BREMS- UND RÜCKLEUCHTE | 130 |
| LEUCHTE (12 V/ 21/5 W) (ABSTELLEN) | 3C-6516 | 1 | BREMS- UND RÜCKLEUCHTE | 130 |
| LEUCHTE (12 V, 4 W) | 100-3246 | 1 | SCHEINWERFER U. RICHTUNGSLEUCHTE | 120 |
| | | 1 | SCHEINWERFER U. RICHTUNGSLEUCHTE | 122 |
| LEUCHTE (12 V, 55 W) | 9W-0607 | 1 | ARBEITSLEUCHTEN | 119 |
| | | 1 | ARBEITSLEUCHTEN | 136 |
| | | 1 | ARBEITSLEUCHTEN | 140 |
| | | 1 | ARBEITSLEUCHTEN | 142 |
| | 9X-8118 | 1 | RUNDUM-KENNLEUCHTE | 131 |
| | | 1 | RUNDUM-KENNLEUCHTE | 132 |
| | 9W-0607 | 1 | ARBEITSLEUCHTEN | 118 |
| LEUCHTE (12 V, 55 W) (ARBEITSSCHEINWERFER) | 9W-0607 | 1 | ARBEITSLEUCHTEN | 136 |
| LEUCHTE (12 V/21 W) | 5G-3244 | 1 | ARBEITSLEUCHTEN | 117 |
| LEUCHTE (12 V)(55 W) | 9W-0607 | 1 | ARBEITSLEUCHTEN | 133 |
| LEUCHTE (12V/55W) | 9W-0607 | 1 | ARBEITSLEUCHTEN | 138 |
| REFLEKTOR | 9R-1499 | 2 | BELEUCHTUNGSANLAGE (STRASSENAUSRÜSTUNG) | 146 |
| | | 2 | BELEUCHTUNGSANLAGE (STRASSENAUSRÜSTUNG) | 149 |
| | | 2 | BELEUCHTUNGSANLAGE (STRASSENAUSRÜSTUNG) | 152 |

# WARTUNGSTEILE

| BESCHREIBUNG | ERSATZTEIL-NUMMER | MENGE | VERWENDET IN | SEITE |
|---|---|---|---|---|
| | | 2 | BELEUCHTUNGSANLAGE (STRASSENAUSRÜSTUNG) | 155 |
| | | 2 | BELEUCHTUNGSANLAGE (STRASSENAUSRÜSTUNG) | 158 |
| SCHEINWERFER (12 V) | 9W-3324 | 1 | SCHEINWERFER U. RICHTUNGSLEUCHTE | 124 |
| | | 1 | SCHEINWERFER U. RICHTUNGSLEUCHTE | 126 |
| SCHEINWERFER (12 V, 60/55 W) | 9W-3324 | 1 | SCHEINWERFER U. RICHTUNGSLEUCHTE | 120 |
| | | 1 | SCHEINWERFER U. RICHTUNGSLEUCHTE | 122 |
| SICHERUNG (10 A) | 3K-8782 | 1 | RUNDUM-KENNLEUCHTE | 131 |
| | | 1 | RUNDUM-KENNLEUCHTE | 132 |
| | 113-8490 | 2 | ARBEITSLEUCHTEN | 133 |
| | | 2 | ARBEITSLEUCHTEN | 138 |
| | | 2 | ARBEITSLEUCHTEN | 142 |
| | | 1 | KLIMAANLAGENVERDRAHTUNG | 173 |
| | | 1 | SCHWINGUNGSDÄMPFUNGSVER-DRAHTUNG | 206 |
| | | 1 | SCHWINGUNGSDÄMPFUNGSVER-DRAHTUNG | 208 |
| | | 1 | SCHWINGUNGSDÄMPFUNGSVER-DRAHTUNG | 210 |
| | | 1 | SCHWINGUNGSDÄMPFUNGSVER-DRAHTUNG | 212 |
| | | 1 | STECKDOSENVERDRAHTUNG | 202 |
| | | 1 | FAHRERHAUSVERDRAHTUNG | 181 |
| SICHERUNG (15 A) | 113-8491 | 3 | ARBEITSLEUCHTEN | 133 |
| | | 2 | ARBEITSLEUCHTEN | 136 |
| | | 2 | ARBEITSLEUCHTEN | 138 |
| | | 2 | ARBEITSLEUCHTEN | 140 |
| | | 2 | ARBEITSLEUCHTEN | 142 |
| SICHERUNG (20 A) | 113-8492 | 2 | FAHRERHAUSVERDRAHTUNG | 178 |
| SICHERUNG (5 A) | 141-2759 | 1 | FAHRERHAUSVERDRAHTUNG | 178 |
| | | 1 | LENKVERDRAHTUNG | 217 |

# WARTUNGSTEILE

| BESCHREIBUNG | ERSATZTEIL-NUMMER | MENGE | VERWENDET IN | SEITE |
|---|---|---|---|---|
| **FAHRERHAUS** | | | | |
| FILTER | 206-7514 | 1 | FAHRERHAUSHEIZUNG U. BEFESTIGUNGSTEILE | 741 |
| | | 1 | KLIMAANLAGE UND AUFHÄNGUNG | 698 |
| KEILRIEMEN (KLIMAANLAGENKOM-PRESSOR) | 1W-2934 | 1 | KÄLTEMITTELKOMPRESSOR | 715 |
| KEILRIEMENSATZ (EINSCHL. 2 RIEMEN) | 3N-1491 | 1 | FAHRERHAUS | 704 |
| | | 1 | FAHRERHAUS MIT ÜBERROLLSCHUTZ | 706 |
| | 5L-3308 | 1 | FAHRERHAUS | 703 |
| | | 1 | FAHRERHAUS MIT ÜBERROLLSCHUTZ | 705 |
| | | 1 | WETTERDACH | 711 |
| LEUCHTE (12 V) | 122-7137 | 1 | DREHZAHLMESSER, ELEKTR. | 781 |
| | | 1 | DREHZAHLMESSER, ELEKTR. | 782 |
| LEUCHTE (12 V) (MINIATURLEUCHTE) | 189-3610 | 1 | WARNANZEIGEMODUL | 753 |
| LEUCHTE (12V, 10W) | 6R-7490 | 1 | SCHALLDÄMPFUNG | 776 |
| LUFTFILTER | 170-7272 | 1 | FAHRERHAUSHEIZUNG | 743 |
| LUFTFILTER (FAHRERHAUSLUFT) | 170-7272 | 1 | KLIMAANLAGE | 700 |
| SCHEIBENWISCHERBLATT | 102-2940 | 2 | SCHEIBENWISCHER | 797 |
| WISCHERBLATT | 5C-8813 | 1 | SCHEIBENWISCHER | 797 |
| **HYDRAULIKSYSTEM** | | | | |
| EINFÜLLKAPPE (HYDRAULIKTANK) | 237-3797 | 1 | HYDRAULIKTANK | 539 |
| FILTER | 4T-4520 | 1 | STEUERVENTIL | 559 |
| | | 1 | STEUERVENTIL | 561 |
| | | 1 | STEUERVENTIL | 563 |
| | | 1 | STEUERVENTIL | 565 |
| | | 1 | STEUERVENTIL | 567 |
| | | 1 | STEUERVENTIL | 569 |
| | | 1 | STEUERVENTIL | 571 |
| | | 1 | STEUERVENTIL | 573 |
| | | 1 | STEUERVENTIL | 575 |
| | | 1 | STEUERVENTIL | 577 |
| FILTER (HYDRAULIKTANKENTLÜFTER) | 9R-9925 | 1 | HYDRAULIKTANK | 539 |
| KAPPE | 6V-9830 | 2 | LADERZUSATZLEITUNGEN | 462 |
| | 6V-9831 | 2 | HUBZYLINDERLEITUNGEN | 446 |
| | | 2 | LASTSTEUERVENTILLEITUNGEN | 459 |
| O-RING-DICHTUNG | 2M-9780 | 1 | TELESKOPSTIELLEITUNGEN | 445 |
| ÖLFILTER (HYDRAULISCH) (SCHWER ENTFLAMMBAR) | 134-3014 | 1 | HYDRAULIKSYSTEM | 396 |
| | | 1 | HYDRAULIKSYSTEM | 397 |
| ÖLFILTER (REINIGUNG/HOCHLEI-STUNG) | 126-1817 | 1 | HYDRAULIKSYSTEM | 396 |
| | | 1 | HYDRAULIKSYSTEM | 397 |
| SCHMIERNIPPEL (1/8-27-GEWINDE) | 3B-8489 | 4 | ZYLINDERAUFHÄNGUNG | 527 |
| STAUBKAPPE | 6V-0852 | 1 | VERBINDUNGSVENTIL | 347 |
| | | 1 | VORSTEUERLEITUNGEN | 474 |
| **KRAFTSTOFFSYSTEM** | | | | |
| FILTER (KRAFTSTOFF) | 228-9130 | 1 | KRAFTSTOFF-ENTLÜFTUNGSPUMPE | 98 |
| KRAFTSTOFFFILTEREINSATZ | 1R-1804 | 1 | KRAFTSTOFFILTER | 88 |
| KRAFTSTOFFTANKKAPPE | 201-0330 | 1 | KRAFTSTOFFTANK | 102 |

# WARTUNGSTEILE

| BESCHREIBUNG | ERSATZTEIL-NUMMER | MENGE | VERWENDET IN | SEITE |
|---|---|---|---|---|
| **KRAFTÜBERTRAGUNG** | | | | |
| DRUCKBEGRENZUNGSVENTIL (ENTLÜFTUNGSVORRICHTUNG) | 5F-5434 | 1 | ACHSENANBAUSATZ | 237 |
| ENTLÜFTER | 7T-3251 | 1 | LASTSCHALTGETRIEBE | 256 |
| ENTLÜFTER (ACHSE) | 197-9155 | 1 | ANTRIEBS- UND LENKACHSE | 218 |
| ENTLÜFTER (GETRIEBE) | 7T-3251 | 1 | WECHSELGETRIEBE | 249 |
| KAPPE | 2D-2633 | 1 | REIFENVENTIL | 267 |
| KAPPE (VENTILSCHAFT) | 2D-2633 | 1 | REIFENVENTIL | 266 |
| MAGNETISCHE SCHRAUBE | 152-6144 | 3 | ANTRIEBS- UND LENKACHSE | 218 |
| | | 1 | DIFFERENTIAL UND TELLERRAD | 227 |
| MAGNETSTOPFEN | 9R-6602 | 2 | HINTERACHSE | 222 |
| O-RING-DICHTUNG | 5P-6718 | 1 | LASTSCHALTGETRIEBE | 256 |
| ÖLFILTER (GETRIEBE) | 119-4740 | 1 | LASTSCHALTGETRIEBE | 247 |
| | | 1 | MECHANISCHES GETRIEBE | 247 |
| SIEB | 7T-2651 | 1 | LASTSCHALTGETRIEBE | 254 |
| SIEB (GETRIEBEGEHÄUSE) | 7T-2651 | 1 | WECHSELGETRIEBE | 250 |
| **KÜHLSYSTEM** | | | | |
| KAPPE (KÜHLER) | 227-4376 | 1 | KÜHLER UND HYDRAULIKÖLKÜHLER | 69 |
| | | 1 | KÜHLER UND HYDRAULIKÖLKÜHLER | 72 |
| O-RING-DICHTUNG (KÜHLWASSERTHERMOSTAT) | 225-6909 | 1 | KÜHLWASSERANSCHLUSS | 53 |
| SCHRAUBE (MOTORÖLFILTERLEITUNGEN) | 225-7941 | 1 | MOTORÖLKÜHLER UND FILTERSOCKEL | 54 |
| WASSERTEMPERATURREGLER | 225-6908 | 1 | KÜHLWASSERANSCHLUSS | 53 |
| **LUFTANSAUG- UND ABGASSYSTEM** | | | | |
| LUFTFILTERWARTUNGSANZEIGE | 8N-2694 | 1 | LUFTFILTERWARTUNGSANZEIGE | 78 |
| **MOTOR (GRUNDAUSFÜHRUNG)** | | | | |
| FEDER (ENTLÜFTERSCHLAUCH) | 162-1565 | 1 | VENTILDECKEL | 25 |
| ÖLWANNEN-ABLASSCHRAUBE | 7C-0351 | 2 | ÖLWANNE | 43 |
| SCHLAUCHLEITUNG (ENTLÜFTER) | 198-8645 | 1 | VENTILDECKEL | 25 |
| **RAHMEN UND FAHRGESTELL** | | | | |
| SCHMIERNIPPEL (1/8-27-GEWINDE) | 3B-8488 | 2 | GLEITRAHMEN | 324 |
| | 3B-8489 | 2 | GLEITRAHMEN | 324 |
| **SCHMIERSYSTEM** | | | | |
| ÖLFILTER | 7W-2326 | 1 | MOTORÖLEINFÜLLSTUTZEN | 51 |
| **WARTUNGSAUSRÜSTUNG UND -ZUBEHÖR** | | | | |
| BUCHSE | 8Y-6364 | 1 | VORHÄNGESCHLOSS | 803 |
| SCHLÜSSEL | 5P-8500 | 1 | VORHÄNGESCHLOSS | 803 |
| VORHÄNGESCHLOSS | 5P-8502 | 2 | VORHÄNGESCHLOSS | 802 |
| | | 3 | VORHÄNGESCHLOSS | 803 |

# INDEX


| Name | Page |
|---|---|
| **A** | |
| ACCUMULATOR GP-REFRIGERANT | 749 |
| ACCUMULATOR GP-RIDE CONTROL | 346 |
| AIR CLEANER GP | 73<br>75 |
| AIR CONDITIONER & MOUNTING GP | 698 |
| AIR CONDITIONER GP | 700 |
| ALTERNATOR GP-CHARGING | 103 |
| ARM GP-LIFT | 586 |
| ARMREST GP | 702 |
| AXLE GP-DRIVE & STEERING | 218 |
| AXLE GP-REAR | 220 |
| **B** | |
| BACKHOE AR–ONE WAY LINES | 10 |
| BACKHOE AR–ONE WAY LINES–BOOM, STICK LOCKS | 10 |
| BACKHOE AR–ONE WAY LINES, NARROW FRAME | 13 |
| BACKHOE AR–STANDARD STICK–ONE WAY LINES–BOOM, STICK LOCKS–NARROW FRAME | 13 |
| BACKHOE AR-EXTENDABLE STICK | 1<br>5<br>6 |
| BACKHOE AR-EXTENDABLE STICK–BOOM AND STICK LOCKS | 3 |
| BACKHOE AR-EXTENDABLE STICK–BOOM, STICK LOCKS | 1<br>5 |
| BACKHOE AR-EXTENDABLE STICK–BOOM, STICK LOCKS–NARROW FRAME | 4<br>7 |
| BACKHOE AR-EXTENDABLE STICK–NARROW FRAME | 2<br>3<br>7 |
| BACKHOE AR-EXTENDABLE STICK–NARROW FRAME, ONE WAY LINES, BOOM AND STICK LOCKS | 4 |
| BACKHOE AR-EXTENDABLE STICK–ONE WAY LINES | 2 |
| BACKHOE AR-EXTENDABLE STICK–ONE WAY LINES, BOOM AND STICK LOCKS | 6 |
| BACKHOE AR-EXTENDABLE STICK–ONE WAY LINES, BOOM AND STICK LOCKS, NARROW FRAME | 8 |
| BACKHOE AR-EXTENDABLE STICK–ONE WAY LINES, NARROW FRAME | 8 |
| BACKHOE AR-STANDARD STICK | 11 |
| BACKHOE AR-STANDARD STICK–BOOM, STICK LOCKS | 9<br>11 |
| BACKHOE AR-STANDARD STICK–STANDARD STICK | 9 |
| BACKHOE AR-STANDARD STICK–STANDARD STICK–BOOM, STICK LOCKS–NARROW FRAME | 12<br>14 |
| BACKHOE AR-STANDARD STICK–STANDARD STICK–NARROW FRAME | 12<br>14 |
| BATTERY GP | 106<br>108 |
| BATTERY GP–HEAVY DUTY | 104<br>110 |
| BATTERY (12 VOLT) | 104<br>106<br>108<br>110 |
| BELT-DRIVE (WARNING BEACON) | 131 |
| BELT-DRIVE (WARNING BEACON) | 132 |
| BLADE AS | 797 |
| BLADE-WIPER | 797 |
| BOOM GP | 588<br>589 |
| BOOT | 391<br>393 |
| BOX GP-BATTERY | 307<br>308<br>309<br>310 |
| BOX GP-BATTERY–POWER SHIFT | 306 |
| BRACKET AS | 104<br>106 |
| BRACKET GP-TRANSPORT | 590<br>591 |
| BRAKE GP-PARKING | 289 |
| BREATHER | 256 |
| BREATHER (AXLE) | 218 |
| BREATHER (TRANSMISSION) | 249 |
| BUCKET AR-MULTIPURPOSE | 615<br>616<br>617<br>618<br>619<br>620 |
| BUCKET AS-GENERAL PURPOSE | 621<br>622<br>623<br>624 |
| BUCKET GP-HOE–HEAVY DUTY | 630<br>631<br>632<br>633<br>634<br>640<br>641 |

# INDEX


| Name | Page |
|---|---|
| | 642 |
| | 648 |
| | 649 |
| | 650 |
| | 651 |
| | 652 |
| | 653 |
| | 664 |
| BUCKET GP-HOE–HIGH CAPACITY | 635 |
| | 636 |
| | 637 |
| | 638 |
| | 654 |
| | 655 |
| | 656 |
| | 657 |
| BUCKET GP-HOE–ROCK | 658 |
| | 659 |
| | 660 |
| | 661 |
| | 662 |
| | 665 |
| BUCKET GP-HOE–STANDARD DUTY | 625 |
| | 626 |
| | 627 |
| | 628 |
| | 629 |
| | 639 |
| | 643 |
| | 644 |
| | 645 |
| | 646 |
| | 647 |
| | 663 |
| BUCKET GP-MULTIPURPOSE | 666 |
| | 667 |
| | 668 |
| | 669 |
| | 670 |
| | 672 |
| | 674 |
| | 675 |
| BUMPER GP-FRONT | 311 |


## C


| Name | Page |
|---|---|
| CAB AR | 703 |
| | 704 |
| CAB AR-ENCLOSED ROPS | 705 |
| | 706 |
| CAB GP | 707 |
| | 709 |
| CAMSHAFT GP | 24 |
| CANOPY AR | 711 |
| CANOPY GP-OPEN ROPS | 712 |
| CAP | 267 |
| CAP AS | 446 |
| | 459 |
| | 462 |
| CAP AS (RADIATOR) | 69 |
| | 72 |
| CAP-DUST | 347 |
| | 474 |
| CAP-FILL (HYDRAULIC TANK) | 539 |
| CAP-FUEL | 102 |
| CAP (VALVE STEM) | 266 |
| CHASSIS AR–NARROW FRAME | 15 |
| CHASSIS AR–STANDARD FRAME | 15 |
| COMMON AR | 16 |
| COMPARTMENT GP-LITERATURE | 713 |
| COMPRESSOR GP-REFRIGERANT | 714 |
| | 715 |
| CONDENSER & MTG GP-REFRIGERANT | 716 |
| CONNECTION GP-WATER | 53 |
| CONNECTOR GP | 451 |
| CONNECTOR GP-VALVE | 347 |
| CONSOLE GP-FRONT | 717 |
| | 718 |
| CONSOLE GP-OPERATOR–LH | 719 |
| CONSOLE GP-OPERATOR–RH | 720 |
| CONSOLE GP-SIDE | 724 |
| | 725 |
| | 726 |
| CONSOLE GP-SIDE–LH | 722 |
| CONSOLE GP-SIDE–LH– AIR CONDITIONING | 721 |
| | 723 |
| CONTROL AR-RIDE | 349 |
| CONTROL AR-RIDE–AUTOSHIFT | 348 |
| CONTROL AR-RIDE– AUTOSHIFT WITH LOADER LOCKS | 348 |
| CONTROL AR-RIDE–STANDARD SHIFT | 348 |
| CONTROL AR-RIDE– STANDARD SHIFT WITH LOADER LOCKS | 348 |
| CONTROL GP-DIFFERENTIAL LOCK | 225 |
| CONTROL GP-GOV & ACCELERATOR | 86 |
| CONTROL GP-HANDLE–STABILIZER | 350 |
| | 351 |
| CONTROL GP-HYDRAULIC HAND | 352 |
| | 354 |
| | 356 |
| CONTROL GP-HYDRAULIC HAND–KIT | 358 |
| CONTROL GP-HYDRAULIC HAND– LOADER SINGLE TILT | 361 |
| CONTROL GP-HYDRAULIC HAND– PARALLEL LIFT | 359 |
| | 362 |
| CONTROL GP-HYDRAULIC HAND– STABILIZER | 363 |
| | 364 |

# INDEX


| Name | Page |
|---|---|
| CONTROL GP-HYDRAULIC PEDAL | 365 |
| | 367 |
| CONTROL GP-PARKING BRAKE | 290 |
| | 291 |
| CONTROL GP-POSITION | 112 |
| | 195 |
| CONTROL GP-SERVICE BRAKE | 292 |
| CONTROL GP-STEERING | 297 |
| | 298 |
| CONTROL GP-TRANSMISSION | 226 |
| CONVERSION AR-CERTIFICATION | 16 |
| | 17 |
| CONVERSION AR-CERTIFICATION–AUTOSHIFT | 18 |
| CONVERSION AR-CERTIFICATION–EXTENDABLE STICK | 18 |
| CONVERSION AR-CERTIFICATION–SIDESHIFT–MECHANICAL LOADER | 17 |
| CONVERSION AR-CERTIFICATION–STANDARD SHIFT | 19 |
| CONVERSION GP-HYD HAND CONTROL–KIT | 369 |
| COOLANT HEATER LINES | 749 |
| COOLER GP-ENGINE OIL | 54 |
| COOLER GP-FLTR BASE & ENG OIL | 54 |
| COUNTERWEIGHT GP | 312 |
| | 313 |
| | 314 |
| | 315 |
| COUPLER GP-QUICK | 677 |
| | 678 |
| | 679 |
| | 680 |
| | 681 |
| | 682 |
| COUPLING GP | 370 |
| COVER & VALVE GP-BANK | 371 |
| COVER GP-AIR INLET | 76 |
| COVER GP-CONSOLE | 727 |
| COVER GP-FIREWALL | 728 |
| | 729 |
| COVER GP-POST | 730 |
| COVER GP-VALVE MECHANISM | 25 |
| CRANKSHAFT GP | 27 |
| CYLINDER AS | 292 |
| CYLINDER BLOCK GP | 29 |
| | 31 |
| CYLINDER GP-BACKHOE BUCKET | 372 |
| CYLINDER GP-BACKHOE BUCKET–EXTENDABLE STICK | 374 |
| CYLINDER GP-BOOM | 376 |
| CYLINDER GP-EXTENDABLE STICK | 378 |
| | 379 |
| CYLINDER GP-LIFT | 381 |
| CYLINDER GP-MULTIPURPOSE BUKT | 382 |
| CYLINDER GP-STABILIZER | 384 |
| CYLINDER GP-STICK | 385 |
| CYLINDER GP-SWING | 386 |
| | 387 |
| CYLINDER GP-TILT | 388 |
| CYLINDER HEAD GP | 32 |
| | 33 |

## D

| Name | Page |
|---|---|
| DIFFERENTIAL & BEVEL GEAR GP | 227 |
| DIFFERENTIAL GP | 229 |
| DOOR GP-BATTERY | 316 |
| DOOR GP-LH | 731 |
| DOOR GP-RH | 733 |
| DRAIN GP-HYDRAULIC | 390 |
| DRIVE AR-BACKHOE LOADER–2 WHEEL STEER–ALL WHEEL DRIVE | 230 |
| DRIVE GP-FAN | 34 |
| DRIVE GP-FLEXIBLE COUPLING | 231 |
| DUCT GP-AIR–HEATER | 738 |
| DUCT GP-AIR–POWERSHIFT | 737 |
| DUCT GP-AIR–STANDARD SHIFT | 735 |

## E

| Name | Page |
|---|---|
| EDGE GP-CUTTING | 683 |
| | 684 |
| ELEMENT-FILTER (FUEL) | 98 |
| ENGINE AR | 20 |
| | 21 |
| ENGINE AR-PRIMARY | 22 |
| | 23 |
| EXTENSION GP-EXHAUST | 77 |

## F

| Name | Page |
|---|---|
| FAN AS | 700 |
| | 743 |
| FAN GP-SUCTION | 56 |
| | 57 |
| FENDER GP-FRONT | 317 |
| | 318 |
| FENDER GP-REAR | 319 |
| FILLER GP-ENGINE OIL | 51 |
| FILLER GP-POWER TRAIN OIL | 232 |
| | 233 |
| FILM (AIR RECIRCULATION) | 700 |
| FILM-AWS | 806 |
| FILM (BUCKET CONTROL) | 354 |
| | 805 |
| FILM (BUCKET CONTROL) | 806 |
| FILM (BULK) (.095M) | 806 |
| FILM-CAT | 338 |
| FILM (CATERPILLAR) | 705 |

# INDEX


| Name | Page |
|---|---|
| | 706 |
| | 800 |
| FILM-CONTROL (AIR CONDITIONER) | 698 |
| | 741 |
| | 806 |
| FILM (CONTROL PLATE) | 805 |
| FILM (CTR PIVOT/BOOM LOCK) | 805 |
| FILM GP | 799 |
| | 800 |
| FILM-IDENTIFICATION (FUSE PANEL) | 230 |
| | 806 |
| FILM (IGNITION SWITCH) | 115 |
| FILM-INDICATOR | 185 |
| | 617 |
| | 618 |
| | 620 |
| | 806 |
| FILM-INDICATOR (BUCKET) | 616 |
| | 617 |
| FILM-INDICATOR (BUCKET LEVEL) (BUCKET) | 615 |
| FILM-INDICATOR (416D) | 183 |
| FILM-INDICATOR (416D) | 806 |
| FILM (INST) | 806 |
| FILM (INST) (MULTIPURPOSE BUCKET CONTROL) | 392 |
| FILM-INSTRUCTION | 112 |
| | 806 |
| FILM-INSTRUCTION (BUCKET CONTROL) | 391 |
| | 392 |
| | 393 |
| | 394 |
| | 807 |
| FILM-INSTRUCTION (E-STICK) | 365 |
| FILM-INSTRUCTION (EXTENDABLE STICK) | 806 |
| FILM-INSTRUCTION (NO STEP) | 806 |
| FILM-INSTRUCTION (RETURN FLOW) | 408 |
| | 412 |
| | 416 |
| | 420 |
| | 424 |
| | 428 |
| | 432 |
| | 436 |
| | 806 |
| FILM-LIFT | 804 |
| FILM-LIFT & TIE DOWN | 804 |
| | 807 |
| FILM (MACHINE SECURITY SYSTEM) | 115 |
| FILM (MULTIPURPOSE BUCKET) | 394 |
| | 806 |
| FILM (MULTIPURPOSE BUCKET) (MECHANICAL BUCKET CONTROL) | 392 |
| FILM (PLATE-NAME) | 346 |
| FILM (RIDE CONTROL) | 349 |
| | 397 |
| FILM (SISHF/BOOM LOCK) | 805 |
| FILM (STABILIZER CONTROL) | 538 |
| FILM (START) | 115 |
| FILM (START SWITCH) | 758 |
| | 760 |
| | 805 |
| FILM (STD CROSS PATTERN) | 805 |
| FILM-STRIPE (278CM) | 338 |
| FILM-STRIPE (400CM) | 703 |
| FILM-STRIPE (400CM) | 705 |
| | 706 |
| FILM-STRIPE (400CM) | 704 |
| FILM-TIE DOWN | 804 |
| FILM (VARIABLE SPEED) | 86 |
| | 805 |
| FILM-WARNING | 804 |
| | 805 |
| FILM-WARNING (HIGH PRESSURE CYLINDER) | 409 |
| | 412 |
| | 416 |
| | 420 |
| | 424 |
| | 428 |
| | 432 |
| | 436 |
| | 487 |
| | 807 |
| FILM (20 KM/HR) | 18 |
| | 19 |
| FILTER | 559 |
| | 561 |
| | 563 |
| | 565 |
| | 567 |
| | 569 |
| | 571 |
| | 573 |
| | 575 |
| | 577 |
| | 698 |
| | 741 |
| FILTER-AIR | 743 |
| FILTER-AIR (CAB AIR) | 700 |
| FILTER AS-ENGINE OIL | 51 |
| FILTER AS-OIL (CLEANOUT/HIGH EFFICIENCY) | 396 |
| | 397 |
| FILTER AS-OIL (HYDRAULIC) (FIRE RESISTANT) | 396 |
| | 397 |
| FILTER AS-OIL (TRANSMISSION) | 247 |
| FILTER BASE & ENG OIL COOLER | 54 |
| FILTER ELEMENT AS-FUEL | 88 |

# INDEX


| Name | Page |
|---|---|
| FILTER GP-FUEL | 88 |
| FILTER (HYDRAULIC TANK BREATHER) | 539 |
| FITTING GP-HEATER & AIR COND | 58 |
| FITTING-GREASE | 586 |
| | 588 |
| | 596 |
| | 604 |
| | 668 |
| | 674 |
| | 675 |
| FITTING-GREASE (1/8-27 THD) | 324 |
| | 527 |
| | 586 |
| | 609 |
| | 611 |
| | 613 |
| | 666 |
| | 667 |
| | 669 |
| | 689 |
| FITTING-HYDRAULIC | 678 |
| FLASHER AS | 198 |
| FLOOR MAT GP | 739 |
| | 740 |
| FLOORPLATE GP | 320 |
| FLYWHEEL GP | 35 |
| FORK AR | 685 |
| FORK GP | 686 |
| FRAME GP-LOADER–NARROW–PARALLEL LIFT | 323 |
| FRAME GP-LOADER–PARALLEL LIFT | 322 |
| FRAME GP-SLIDING | 324 |
| FRAME GP-SWING | 326 |
| | 329 |
| FUSE (10 AMP) | 133 |
| | 138 |
| | 173 |
| | 181 |
| | 202 |
| | 208 |
| | 210 |
| | 212 |
| FUSE (10-AMPERE) | 131 |
| | 132 |
| | 142 |
| | 206 |
| FUSE (15 AMP) | 133 |
| | 136 |
| | 138 |
| FUSE (15-AMPERE) | 140 |
| | 142 |
| FUSE (20 AMP) | 178 |
| FUSE (5 AMP) | 178 |
| | 217 |

## G

| Name | Page |
|---|---|
| GLOW PLUG | 113 |
| GLOW PLUG GP | 113 |
| GUARD GP-BUCKET–FRONT | 687 |
| | 688 |
| GUARD GP-BUCKET (FRONT) | 18 |
| | 19 |
| GUARD GP-DRIVE SHAFT–ALL WHEEL DRIVE–ALL WHEEL STEER | 331 |
| GUARD GP-LIGHTING | 332 |
| GUARD GP-LIGHTING–REAR | 333 |
| GUARD GP-LINES | 334 |
| GUARD GP-LINES–NARROW FRAME | 335 |

## H

| Name | Page |
|---|---|
| HEATER & MTG GP-CAB | 741 |
| HEATER GP-CAB | 743 |
| HEATER GP-JACKET WATER | 114 |
| HOLDER AS-BRUSH | 166 |
| HOOD & GUARD GP | 336 |
| HOOD GP-ENGINE | 338 |
| HORN GP-ELECTRIC–REAR | 745 |
| HOSE (BREATHER) | 25 |
| HOUSING & FLANGE GP-AXLE | 234 |
| | 235 |
| HOUSING AS-EXTENDABLE STICK | 592 |
| HOUSING GP-DIFFERENTIAL | 227 |
| HOUSING GP-FLYWHEEL | 36 |
| HOUSING GP-FRONT | 37 |
| HYDRAULIC AR–CUSHION SWING–SIDESHIFT NARROW FRAME | 395 |
| HYDRAULIC AR–CUSHION SWING–SIDESHIFT STANDARD FRAME | 395 |
| HYDRAULIC AR–GENERAL PURPOSE BUCKET | 391 |
| | 393 |
| HYDRAULIC AR–GENERAL PURPOSE BUCKET–LOCKS | 391 |
| | 393 |
| HYDRAULIC AR–MULTIPURPOSE BUCKET | 392 |
| | 394 |
| HYDRAULIC AR–MULTIPURPOSE BUCKET–LOCKS | 392 |
| | 394 |
| HYDRAULIC AR–NARROW FRAME | 397 |
| HYDRAULIC AR–STANDARD FRAME | 396 |
| HYDRAULIC AR–STANDARD SWING–NARROW FRAME | 395 |
| HYDRAULIC AR–STANDARD SWING–STANDARD FRAME | 394 |

# INDEX


| Name | Page |
|---|---|
| **I** | |
| INDICATOR AS | 187 |
| INDICATOR GP-AIR FILTER CHANGE | 78 |
| | 79 |
| INSTALLATION AR-WHEEL CHOCK | 801 |
| INSTALLATION GP-SECURITY | 115 |
| INSTALLATION GP-SECURITY (MACHINE SECURITY) | 115 |
| **K** | |
| KEY | 803 |
| KEY AS-ELECTRONIC (SECURITY) | 115 |
| KIT-ACCUMULATOR SERVICE | 346 |
| KIT-ADJUSTER | 702 |
| KIT-BEARING | 220 |
| KIT-BRAKE CALIPER | 289 |
| KIT-CAM (COUNTERCLOCKWISE) | 289 |
| KIT-CONNECTING PLUG (12-PIN) | 183 |
| KIT-CONNECTING PLUG (2 PIN) | 138 |
| | 144 |
| | 181 |
| | 203 |
| | 215 |
| | 261 |
| | 700 |
| KIT-CONNECTING PLUG (2 PIN) | 133 |
| | 291 |
| KIT-CONNECTING PLUG (2-PIN) | 115 |
| | 173 |
| | 193 |
| | 198 |
| | 210 |
| | 212 |
| KIT-CONNECTING PLUG (3 PIN) | 112 |
| | 144 |
| | 178 |
| | 181 |
| KIT-CONNECTING PLUG (4 PIN) | 138 |
| | 178 |
| | 181 |
| | 203 |
| | 215 |
| KIT-CONNECTING PLUG (4 PIN) | 133 |
| KIT-CONNECTING PLUG (4-PIN) | 210 |
| | 212 |
| KIT-CONNECTING PLUG (4-PIN) | 136 |
| KIT-CONNECTING PLUG (6 PIN) | 138 |
| | 146 |
| | 149 |
| | 152 |
| | 178 |
| | 181 |
| | 203 |
| KIT-CONNECTING PLUG (6 PIN) | 133 |
| KIT-CONNECTING PLUG (6-PIN) | 210 |
| | 212 |
| KIT-CONNECTING PLUG (8 PIN) | 178 |
| | 709 |
| KIT-CONNECTING PLUG (8-PIN) | 183 |
| KIT-CONTACT (STARTING MOTOR) | 166 |
| KIT-CUSHION | 702 |
| KIT-GEAR (STARTING MOTOR) | 166 |
| KIT-HARDWARE | 584 |
| KIT-PLANETARY CARRIER | 238 |
| KIT-RECEPTACLE (12 PIN) | 754 |
| KIT-RECEPTACLE (12-PIN) | 176 |
| KIT-RECEPTACLE (2 PIN) | 144 |
| | 171 |
| | 196 |
| | 203 |
| | 215 |
| | 217 |
| | 256 |
| | 262 |
| | 263 |
| | 264 |
| | 265 |
| | 359 |
| | 567 |
| | 569 |
| | 571 |
| | 584 |
| | 585 |
| KIT-RECEPTACLE (2 PIN) | 181 |
| KIT-RECEPTACLE (2-PIN) | 226 |
| KIT-RECEPTACLE (3 PIN) | 144 |
| | 165 |
| | 203 |
| | 214 |
| | 263 |
| | 264 |
| | 265 |
| KIT-RECEPTACLE (3-PIN) | 391 |
| | 392 |
| KIT-RECEPTACLE (4 PIN) | 181 |
| KIT-RECEPTACLE (4 PIN) | 181 |
| KIT-RECEPTACLE (4 PIN) | 133 |
| KIT-RECEPTACLE (4 PIN) | 138 |
| KIT-RECEPTACLE (4-PIN) | 115 |
| | 129 |
| | 208 |
| | 210 |
| | 212 |
| KIT-RECEPTACLE (4-PIN) | 193 |
| KIT-RECEPTACLE (4-PIN) | 136 |
| KIT-RECEPTACLE (4 PIN) (SIDE) | 181 |
| KIT-RECEPTACLE (6 PIN) | 133 |
| | 138 |

# INDEX


| Name | Page |
|---|---|
| | 181 |
| | 755 |
| | 797 |
| KIT-RECEPTACLE (6 PIN) | 124 |
| | 126 |
| | 133 |
| KIT-RECEPTACLE (6 PIN) | 138 |
| KIT-RECEPTACLE (6-PIN) | 210 |
| | 212 |
| KIT-RECEPTACLE (8 PIN) | 203 |
| | 753 |
| KIT-RECEPTACLE (8 PIN) | 178 |
| KIT-REPAIR | 797 |
| KIT-RIDE CONTROL | 397 |
| KIT-ROLLER BEARING | 238 |
| KIT-SEAL | 114 |
| KIT-SEAL (STEERING METERING PUMP) | 303 |
| KIT-SERVICE | 761 |
| KIT-SLIDER BLOCK | 770 |
| | 772 |
| | 774 |
| KIT-SPIDER | 218 |
| KIT-SPIDER & BEARING | 241 |
| | 242 |
| | 243 |
| | 244 |
| KNOB GP-STEERING | 299 |

## L

| Name | Page |
|---|---|
| LAMP AS (ROTATING WARNING) | 132 |
| LAMP AS (12-VOLT) | 115 |
| LAMP GP-DOME | 776 |
| LAMP GP-FLOOD–REAR FOG | 117 |
| LAMP GP-FLOOD–12 VOLT | 118 |
| | 119 |
| LAMP GP-HEAD & SIGNAL–LH | 122 |
| | 126 |
| LAMP GP-HEAD & SIGNAL–RH | 120 |
| | 124 |
| LAMP GP-REGISTRATION PLATE | 128 |
| LAMP GP-STOP & TAIL | 129 |
| LAMP GP-STOP & TAIL–12 VOLT | 130 |
| LAMP GP-WARNING BEACON | 131 |
| | 132 |
| LAMP-HEAD (12 VOLT) | 124 |
| | 126 |
| LAMP-HEAD (12-VOLT, 60/55 WATT) | 120 |
| | 122 |
| LAMP (12 VOLT) | 128 |
| | 781 |
| | 782 |
| LAMP (12-VOLT) | 185 |
| LAMP (12-VOLT) (CONVERTER OIL TEMP) | 187 |
| LAMP (12-VOLT) (COOLANT TEMPERATURE GAUGE) | 187 |
| LAMP (12-VOLT) (FUEL LEVEL) | 187 |
| LAMP (12 VOLT) (MINIATURE) | 124 |
| | 126 |
| | 753 |
| LAMP (12-VOLT) (VOLT METER) | 187 |
| LAMP (12 VOLT, 10 WATT) | 776 |
| LAMP (12 VOLT) (21 WATT) | 124 |
| | 126 |
| LAMP (12-VOLT, 21-WATT) | 120 |
| | 122 |
| LAMP (12-VOLT, 4-WATT) | 120 |
| | 122 |
| LAMP (12 VOLT, 55 WATT) | 132 |
| | 136 |
| LAMP (12 VOLT, 55 WATT) | 118 |
| | 119 |
| LAMP (12-VOLT, 55-WATT) | 131 |
| | 140 |
| | 142 |
| LAMP (12 VOLT, 55 WATT) (FLOOD) | 136 |
| LAMP (12 VOLT/21 WATT) | 117 |
| LAMP (12 VOLT)(55 WATT) | 133 |
| LAMP (12 VOLT)(55 WATT) | 133 |
| LAMP (12 VOLT/55 WATT) | 138 |
| LAMP (12 VOLT/55 WATT) | 138 |
| LAMP (12VOLT/21WATT) (TURN SIGNAL) | 130 |
| LAMP (12VOLT/21/5WATT) (STOP) | 130 |
| LENS | 117 |
| LENS (AMBER) | 120 |
| | 122 |
| LENS (AMBER) | 131 |
| | 132 |
| LENS-AMBER | 124 |
| | 126 |
| LENS AS | 120 |
| | 122 |
| | 124 |
| | 126 |
| LENS AS (FLOOD) | 118 |
| | 119 |
| LENS (CLEAR) | 138 |
| LENS (CLEAR) (FLOODLAMP) | 136 |
| LENS (STOP/TURN SIGNAL) | 130 |
| LEVER GP-GOVERNOR CONTROL | 746 |
| LEVER GP-HAND CONTROL | 295 |
| LIFTING GP-ENGINE | 39 |
| LIGHTING GP-FLOOD | 133 |
| | 136 |
| | 138 |
| | 140 |
| | 142 |
| LIGHTING GP-ROADING–FOG LIGHT | 144 |
| LIGHTING GP-ROADING–LH–DIP BEAM | 146 |

# INDEX


| Name | Page |
|---|---|
| LIGHTING GP-ROADING–LH DIP BEAM–SIDE SHIFT –CANOPY | 155 |
| LIGHTING GP-ROADING–RH–DIP BEAM | 149 |
| LIGHTING GP-ROADING–RH DIP BEAM–SIDE SHIFT–CANOPY | 158 |
| LIGHTING GP-ROADING–SIDE REPEATER | 152 |
| LIGHTING GP-WARNING | 161 |
| LIGHTING GP-WARNING BEACON | 163 |
| | 164 |
| LINER GP-SOUND SUPPRESSION | 341 |
| LINES GP-AIR | 81 |
| LINES GP-AIR–CRANKCASE BREATHER | 80 |
| | 82 |
| LINES GP-BACKHOE–NARROW FRAME | 400 |
| LINES GP-BACKHOE–STANDARD FRAME | 398 |
| LINES GP-BACKHOE AUXILIARY | 432 |
| | 436 |
| LINES GP-BACKHOE AUXILIARY–EXTENDABLE STICK–STANDARD FRAME | 402 |
| LINES GP-BACKHOE AUXILIARY–KIT | 408 |
| | 412 |
| | 416 |
| | 420 |
| LINES GP-BACKHOE AUXILIARY–NARROW FRAME | 405 |
| | 407 |
| | 424 |
| | 428 |
| LINES GP-BACKHOE AUXILIARY–STANDARD STICK | 404 |
| LINES GP-BOOM | 440 |
| LINES GP-BUCKET CYLINDER | 441 |
| LINES GP-DRAIN | 443 |
| LINES GP-DRAIN–BOOM, STICK LOCKS | 444 |
| LINES GP-EXTENDABLE STICK | 445 |
| LINES GP-FUEL | 90 |
| LINES GP-HEATER | 747 |
| LINES GP-HEATER & AIR COND | 749 |
| LINES GP-LIFT CYLINDER | 446 |
| | 448 |
| | 450 |
| LINES GP-LOAD CONTROL VALVE–BOOM AND STICK | 451 |
| LINES GP-LOAD CONTROL VALVE–LIFT, TILT | 458 |
| LINES GP-LOAD CONTROL VALVE–PARALLEL LIFT | 454 |
| LINES GP-LOADER AUXILIARY | 462 |
| | 464 |
| LINES GP-MULTIPURPOSE BUCKET | 466 |
| | 468 |
| | 470 |
| | 472 |
| LINES GP-PILOT | 474 |
| LINES GP-POWER TRAIN COOLER | 59 |
| LINES GP-POWER TRAIN COOLER–POWER SHIFT | 61 |
| LINES GP-PUMP | 477 |
| | 479 |
| | 482 |
| | 483 |
| | 485 |
| LINES GP-PUMP–6 BANK | 484 |
| LINES GP-RETURN | 486 |
| LINES GP-RIDE CONTROL | 487 |
| LINES GP-SIDESHIFT LOCK–NARROW FRAME | 491 |
| | 495 |
| LINES GP-SIDESHIFT LOCK–STANDARD FRAME | 489 |
| | 493 |
| LINES GP-STABILIZER | 497 |
| | 499 |
| LINES GP-STEERING–2 WHEEL STEER–ALL WHEEL DRIVE | 300 |
| LINES GP-STICK | 501 |
| LINES GP-STICK–EXTENSION | 502 |
| | 505 |
| LINES GP-SWING–CUSHION–NARROW FRAME | 516 |
| LINES GP-SWING–CUSHION–STANDARD FRAME | 513 |
| LINES GP-SWING–NARROW FRAME | 511 |
| LINES GP-SWING–STANDARD FRAME | 509 |
| LINES GP-TILT CYLINDER | 519 |
| | 521 |
| LINK GP-SHIPPING | 593 |
| LINKAGE GP-BACKHOE BUCKET | 594 |
| | 596 |
| LOADER AR | 597 |
| LOCK GP-HYDRAULIC FOOT CONTROL | 523 |
| LOCK GP-HYDRAULIC HAND CONTROL | 524 |
| LOCK GP-STABILIZER LEG | 598 |
| LOCK GP-TRANSPORT–EXTENDABLE STICK | 601 |
| LOCK GP-TRANSPORT–LOADER | 599 |
| | 600 |
| LOCK GP-TRANSPORT–STABILIZER | 603 |
| LOCK GP-TRANSPORT–STANDARD STICK | 602 |
| LOCK GP-VANDALISM | 802 |
| LOCK GP-VANDALISM–PARALLEL LIFT | 803 |
| LOCKOUT GP-FOURTH GEAR | 236 |


## M


| | |
|---|---|
| MIRROR GP-REAR VIEW | 751 |
| | 752 |
| MODULE GP-WARNING INDICATOR | 753 |
| | 754 |
| MOTOR GP-WINDOW WIPER | 755 |

# INDEX


| Name | Page |
|---|---|
| MOUNTING GP-AXLE–ALL WHEEL DRIVE | 237 |
| MOUNTING GP-BANK VALVE–BACKHOE | 526 |
| MOUNTING GP-BANK VALVE–LOADER, MECHANICAL | 525 |
| MOUNTING GP-BUCKET–BACKHOE | 692 |
| MOUNTING GP-BUCKET–BACKHOE–QUICK COUPLER | 690<br>691 |
| MOUNTING GP-BUCKET–LOADER | 689 |
| MOUNTING GP-CYLINDER–MULTIPURPOSE | 527 |
| MOUNTING GP-ENGINE | 40 |
| MOUNTING GP-ENGINE & TMSN | 41 |
| MOUNTING GP-ENGINE & TMSN–POWER SHIFT | 42 |
| MOUNTING GP-FORK | 693 |
| MOUNTING GP-HYDRAULIC PUMP | 528 |
| MOUNTING GP-INSTRUMENT PANEL–FRONT CONSOLE | 756<br>757 |
| MOUNTING GP-INSTRUMENT PANEL–SIDE | 758 |
| MOUNTING GP-LINES | 529<br>530<br>531<br>532 |
| MOUNTING GP-REGISTRATION | 342<br>343 |
| MOUNTING GP-STICK | 604 |
| MUFFLER GP | 83 |

## P

| Name | Page |
|---|---|
| PAD GP-STABILIZER | 605 |
| PADLOCK GP | 802<br>803 |
| PAN GP-OIL | 43 |
| PANEL GP-INSTRUMENT–SIDE | 760 |
| PEDAL GP-GOVERNOR | 761 |
| PIN GP-AXLE | 218 |
| PISTON & ROD GP | 45 |
| PLANETARY GP-FINAL DRIVE | 238 |
| PLATE & FILM GP | 804<br>805 |
| PLATE AS-SIDE REFLECTIVE | 809 |
| PLATE-IDENTIFICATION | 17<br>18<br>19 |
| PLUG AS-MAGNETIC | 218<br>227 |
| PLUG (ENGINE OIL FILTER LINES) | 54 |
| PLUG GP-CONNECTOR–RETURN TO DIG | 165 |
| PLUG GP-ENGINE | 47<br>48 |
| PLUG-MAGNETIC | 222 |
| PLUG-SUMP DRAIN | 43 |
| POWER TRAIN AR–ALL WHEEL DRIVE–AUTOSHIFT | 239<br>240 |
| POWER TRAIN AR–ALL WHEEL DRIVE–STANDARD SHIFT | 239<br>240 |
| POWER TRAIN AR–2 WHEEL STEER | 239 |
| PULLEY GP-CRANKSHAFT | 49 |
| PUMP GP-ENGINE OIL | 52 |
| PUMP GP-FUEL INJECTION | 92<br>93<br>96 |
| PUMP GP-FUEL PRIMING | 98 |
| PUMP GP-METERING | 303 |
| PUMP GP-PISTON | 533 |
| PUMP GP-TRANSMISSION | 250<br>254 |
| PUMP GP-WATER | 63 |

## R

| Name | Page |
|---|---|
| RADIATOR & FAN GP | 65<br>66 |
| RADIATOR & HYD OIL COOLER GP | 67<br>69<br>70<br>72 |
| REFLECTOR | 146<br>149<br>152<br>155<br>158 |
| REFLECTOR GP–SIDE SHIFT | 344 |
| REGULATOR-WATER TEMPERATURE | 53 |
| RELAY AS (12 VOLT) | 133<br>140<br>142<br>176<br>206<br>208<br>217 |
| RELAY AS (12 VOLT) | 173<br>193 |
| RELAY AS (12-VOLT) | 189 |
| RELAY AS (12 VOLT) (DEAD ENGINE LOWER) | 181 |
| RELAY AS (12 VOLT) (DEAD ENGINE LOWER,RIDE CONTROL) | 210<br>212 |
| RELAY AS (12 VOLT) (HEATER & AIR COND) | 193 |
| RELAY AS (12 VOLT) (HIGH SPEED) | 173 |
| RELAY AS (12 VOLT) (LIGHTING) | 136<br>138 |
| RELAY AS (12-VOLT) (SECURITY ENGINE) | 115 |
| RELAY AS (12 VOLT) (SIDE CONTROL) | 178 |

# INDEX


| Name | Page |
|---|---|
| RELAY AS (12 VOLT) (STANDARD/AUXILIARY FLOOD) | 136 |
| RELAY AS (12 VOLT) (STANDARD/AUXILIARY FLOOD) | 138 |
| RESERVOIR GP-BRAKE | 296 |
| ROTATING GP-PUMP | 536 |

## S

| Name | Page |
|---|---|
| SEAL-O-RING | 256<br>445 |
| SEAL-O-RING (WATER TEMPERATURE REGULATOR) | 53 |
| SEAT BELT GP | 762 |
| SEAT GP | 763<br>765<br>767 |
| SEAT GP-SUSPENSION | 770<br>772<br>774<br>775 |
| SENDER-TEMPERATURE | 189 |
| SEPARATOR GP-WATER | 99 |
| SHAFT GP-DRIVE | 243 |
| SHAFT GP-DRIVE–ALL WHEEL DRIVE | 244 |
| SHAFT GP-DRIVE–FRONT–POWERSHIFT | 242 |
| SHAFT GP-DRIVE–REAR | 241 |
| SHAFT GP-POWER TAKE-OFF | 537 |
| SHIPPING AR-BUCKET | 694 |
| SLEEVE | 803 |
| SLEEVE-CABLE SPLICE | 713 |
| SPEAKER | 776 |
| SPRING (BREATHER HOSE) | 25 |
| STABILIZER AR | 538 |
| STABILIZER GP-BACKHOE | 606 |
| STABILIZER GP-BACKHOE–SLOTTED LEG | 608 |
| STABILIZER GP-BACKHOE–STANDARD LEG | 607 |
| STARTING MOTOR GP-ELECTRIC | 166<br>168 |
| STEERING WHEEL | 298 |
| STEERING WHEEL GP | 304 |
| STICK GP-EXTENDABLE | 609<br>611 |
| STICK GP-HOE | 613 |
| STOP GP-BUCKET–BACKHOE | 695<br>696 |
| STRAINER | 254 |
| STRAINER (TRANSMISSION CASE) | 250 |
| SUN VISOR | 784 |
| SUPPRESSION AR-SOUND | 345 |
| SUPPRESSION AR-SOUND–NATURALLY ASPIRATED | 345 |
| SUPPRESSION GP-SOUND | 776 |
| SUSPENSION GP-SEAT–AIR | 778 |
| SWITCH AS | 393 |
| SWITCH AS (AIR INLET) | 79 |
| SWITCH AS (DETENT) | 392 |
| SWITCH AS (HEATER) | 193 |
| SWITCH AS (HORN) | 183 |
| SWITCH AS (HYDRAULIC LOCK) | 391 |
| SWITCH AS-KEY START | 760 |
| SWITCH AS-LIMIT | 292 |
| SWITCH AS (LOADER VALVE) | 394 |
| SWITCH AS (NEUTRAL LOCK) | 183 |
| SWITCH AS-PRESSURE | 206<br>208<br>210<br>212 |
| SWITCH AS-PRESSURE (HIGH - LOW) | 173 |
| SWITCH AS-PUSH BUTTON | 359 |
| SWITCH AS-PUSH BUTTON (TRANSMISSION NEUTRAL) | 226 |
| SWITCH AS (RIDE CONTROL) | 208 |
| SWITCH AS (RIDE CONTROL-STANDARD) | 397 |
| SWITCH AS-ROCKER (FRONT FLOOD) | 142 |
| SWITCH AS-ROCKER (HAZARD) | 183 |
| SWITCH AS-ROCKER (HEATER FAN SPEED) | 173<br>193 |
| SWITCH AS-ROCKER (REAR FLOOD) | 142 |
| SWITCH AS-ROCKER (RIDE CONTROL) | 206<br>210<br>212 |
| SWITCH AS-ROCKER (RIDE CONTROL) (STANDARD SHIFT) | 349 |
| SWITCH AS-ROLLER (RETURN TO DIG) | 214 |
| SWITCH AS (TURN SIGNAL) | 180 |
| SWITCH GP | 391<br>392<br>394 |
| SWITCH GP (HYDRAULIC LOCK) | 393 |
| SWITCH GP-PRESSURE | 169 |
| SWITCH GP-TEMPERATURE | 170 |
| SWITCH-THERMOSTAT | 700 |
| SWITCH (TIMING ADVANCE) | 93 |
| SWITCH (40-DEG) (ENGINE COOLANT TEMPERATURE) | 96 |
| SYNCHRONIZER GP | 248 |

## T

| Name | Page |
|---|---|
| TACHOMETER GP-ELECTRIC | 703<br>704<br>705<br>706<br>781<br>782 |
| TANK & MTG GP-FUEL | 100 |
| TANK GP-FUEL | 101<br>102 |
| TANK GP-HYDRAULIC | 539 |

# INDEX


| Name | Page |
|---|---|
| TOOTH GP-UNI | 697 |
| TRANSMISSION & MOUNTING GP–ALL WHEEL DRIVE | 246 |
| TRANSMISSION & MOUNTING GP–ALL WHEEL DRIVE–STANDARD SHIFT | 245 |
| TRANSMISSION AR-DIRECT DRIVE–ALL WHEEL DRIVE | 247 |
| TRANSMISSION AR-POWER SHIFT–ALL WHEEL DRIVE | 247 |
| TRANSMISSION GP-DIRECT DRIVE–ALL WHEEL DRIVE | 248 |
| TRANSMISSION GP-POWER SHIFT–ALL WHEEL DRIVE | 254 |
| TRIM GP-CAB | 783 |
| TURBOCHARGER GP | 84 |

## V

| | |
|---|---|
| V-BELT (AIR CONDITIONING COMPRESSOR) | 715 |
| V-BELT SET (INCLUDES 2 BELTS) | 703<br>704<br>705<br>706<br>711 |
| VALVE & MTG GP-BANK–STABILIZER | 541 |
| VALVE AR-BANK 4 | 542 |
| VALVE AR-BANK 5 | 542<br>543 |
| VALVE AR-BANK 6 | 543 |
| VALVE AS-RELIEF (AIR VENT) | 237 |
| VALVE AS (WATER) | 698<br>741 |
| VALVE-GAS | 346 |
| VALVE GP-AUXILIARY–KIT | 544<br>545<br>546 |
| VALVE GP-BANK 2–LOADER | 547<br>548 |
| VALVE GP-BANK 3–BACKHOE | 550 |
| VALVE GP-BANK 3–LOADER | 549 |
| VALVE GP-BANK 4–BACKHOE | 552 |
| VALVE GP-BANK 4–BACKHOE–SIDE SHIFT | 551 |
| VALVE GP-BANK 5–BACKHOE | 554 |
| VALVE GP-BANK 5–BACKHOE–SIDE SHIFT | 553 |
| VALVE GP-BANK 6–BACKHOE | 557 |
| VALVE GP-BANK 6–BACKHOE –SIDE SHIFT | 556 |
| VALVE GP-CHECK–BACK PRESSURE | 558 |
| VALVE GP-CONTROL–AUXILIARY | 559 |
| VALVE GP-CONTROL–BOOM | 575 |
| VALVE GP-CONTROL–BUCKET | 573 |
| VALVE GP-CONTROL–CLAM | 571 |
| VALVE GP-CONTROL–EXTENDABLE STICK;AUXILIARY | 565 |
| VALVE GP-CONTROL–LIFT | 561 |
| VALVE GP-CONTROL–STICK | 577 |
| VALVE GP-CONTROL–SWING | 563 |
| VALVE GP-CONTROL–TILT | 567<br>569 |
| VALVE GP-LOAD CONTROL–TILT | 579 |
| VALVE GP-PRIORITY–STEERING | 305 |
| VALVE GP-PUMP CONTROL | 581<br>582 |
| VALVE GP-RELIEF | 254<br>260<br>305<br>559<br>571<br>575 |
| VALVE GP-RELIEF (CLUTCH PRESSURE) | 248 |
| VALVE GP-RELIEF (CONVERTER) | 248 |
| VALVE GP-SHUTOFF | 390 |
| VALVE GP-SOLENOID | 261<br>262<br>263<br>264<br>265<br>584<br>585 |
| VALVE GP-SOLENOID (12 V) (AIR FUEL RATIO CONTROL) | 92 |
| VALVE GP-TIRE | 266<br>267 |
| VALVE MECHANISM GP | 50 |
| VALVE-SHUTOFF | 58<br>390 |
| VISOR GP-CAB | 784 |

## W

| | |
|---|---|
| WARNING GP-BACKUP | 171 |
| WASHER GP-WINDOW | 785 |
| WHEEL & TIRE AR–ALL WHEEL DRIVE | 267<br>268<br>269<br>270<br>271 |
| WHEEL & TIRE AR–REAR | 271<br>272 |
| WHEEL & TIRE AR–TWO WHEEL DRIVE | 267 |
| WHEEL & TIRE GP | 277 |
| WHEEL & TIRE GP–FRONT | 276<br>277<br>278<br>280<br>283<br>284 |
| WHEEL & TIRE GP–LH | 272<br>273<br>274 |

# INDEX


| Name | Page |
|---|---|
| | 275 |
| | 278 |
| | 279 |
| | 280 |
| | 281 |
| | 282 |
| | 283 |
| | 284 |
| | 285 |
| | 286 |
| | 287 |
| | 288 |
| WHEEL & TIRE GP–REAR | 273 |
| | 274 |
| | 281 |
| | 282 |
| | 285 |
| | 286 |
| WHEEL & TIRE GP–RH | 272 |
| | 274 |
| | 275 |
| | 279 |
| | 280 |
| | 281 |
| | 282 |
| | 283 |
| | 284 |
| | 285 |
| | 286 |
| | 287 |
| | 288 |
| WINDOW GP-CAB–LH | 789 |
| WINDOW GP-CAB–REAR | 791 |
| WINDOW GP-CAB–RH | 787 |
| WINDOW GP-DOOR–LH | 795 |
| WINDOW GP-DOOR–RH | 793 |
| WIPER GP-WINDOW | 797 |
| WIRING GP-AIR CONDITIONER | 173 |
| WIRING GP-AUTOSHIFT | 176 |
| WIRING GP-CAB | 178 |
| | 181 |
| WIRING GP-CAB–TURN SIGNAL | 180 |
| WIRING GP-CONSOLE–FRONT | 183 |
| WIRING GP-CONSOLE–SIDE | 185 |
| WIRING GP-CONSOLE–SIDE, DELUXE | 187 |
| WIRING GP-ENGINE | 189 |
| WIRING GP-HEATER | 193 |
| WIRING GP-KICKOUT & POSITIONER | 195 |
| WIRING GP-PLATFORM | 198 |
| WIRING GP-PLATFORM–SERVICE | 196 |
| WIRING GP-POWER RECEPTACLE | 202 |
| WIRING GP-REAR | 203 |
| WIRING GP-RIDE CONTROL | 206 |
| | 210 |
| WIRING GP-RIDE CONTROL–AUTOSHIFT | 208 |
| | 212 |
| WIRING GP-SENSOR | 214 |
| WIRING GP-STABILIZER ALARM | 215 |
| WIRING GP-STEERING–ALL WHEEL DRIVE | 217 |

# INDEX


| Désignation | Page |
|---|---|
| **A** | |
| ACCOUDOIR (ASS) | 702 |
| ACCOUPLEMENT (ASS) | 370 |
| ACCUMULATEUR - CLIMATISEUR (ASS) | 749 |
| ACCUMULATEUR - COMMANDE DE TRANSLATION (ASS) | 346 |
| ALTERNATEUR DE CHARGE (ASS) | 103 |
| AMPOULE (12 VOLTS) | 128<br>185<br>781<br>782 |
| AMPOULE (12 VOLTS) (INDICATEUR DE TEMPÉRATURE DE LIQUIDE DE REFROIDISSEMENT) | 187 |
| AMPOULE (12 VOLTS) (MINIATURE) | 753 |
| AMPOULE (12 VOLTS) (MINIATURE) | 124<br>126 |
| AMPOULE (12 VOLTS) (NIVEAU DE CARBURANT) | 187 |
| AMPOULE (12 VOLTS) (TEMPÉRATURE D'HUILE DE CONVERTISSEUR) | 187 |
| AMPOULE (12 VOLTS) (VOLTMÈTRE) | 187 |
| AMPOULE (12 VOLTS) (21 WATTS) | 124<br>126 |
| AMPOULE (12 VOLTS/ 21 WATTS) | 117 |
| AMPOULE (12 VOLTS, 55 WATTS) | 118<br>119<br>132 |
| AMPOULE (12 VOLTS, 55 WATTS) | 136 |
| AMPOULE (12 VOLTS, 55 WATTS) (PROJECTEUR) | 136 |
| AMPOULE (12 VOLTS)(55 WATTS) | 133 |
| AMPOULE (12 VOLTS)(55 WATTS) | 133 |
| AMPOULE (12 VOLTS/55 WATTS) | 138 |
| AMPOULE (12 VOLTS)(55 WATTS) | 133 |
| AMPOULE (12 VOLTS/55 WATTS) | 138 |
| AMPOULE (12V, 10W) | 776 |
| AMPOULE (12V, 21W) | 120<br>122 |
| AMPOULE (12V, 4W) | 120<br>122 |
| AMPOULE (12V, 55W) | 131 |
| AMPOULE (12V, 55W) | 140<br>142 |
| AMPOULE (12VOLTS/ 21/ 5WATTS) (ARRÊT) | 130 |
| AMPOULE (12VOLTS/ 21WATTS) (CLIGNOTANT DE DIRECTION) | 130 |
| ARBRE A CAMES (ASS) | 24 |
| ARBRE DE PRISE DE FORCE (ASS) | 537 |
| ARBRE D'ENTRAÎNEMENT (ASS) | 241<br>242<br>243<br>244 |
| ARRÊT-GODET (ASS) | 695 |
| | 696 |
| AUTOCOLLANT - DIRECTION INTÉGRALE | 806 |
| AUTOCOLLANT (ALTERNANCE DIAGONALE STANDARD) | 805 |
| AUTOCOLLANT-ARRIMAGE | 804 |
| AUTOCOLLANT-CAT | 338 |
| AUTOCOLLANT (CATERPILLAR) | 705<br>706<br>800 |
| AUTOCOLLANT-COMMANDE (CLIMATISEUR) | 698<br>741<br>806 |
| AUTOCOLLANT (COMMANDE DE GODET) | 806 |
| AUTOCOLLANT (COMMANDE DE GODET) | 354 |
| AUTOCOLLANT (COMMANDE DE GODET) | 805 |
| AUTOCOLLANT (COMMANDE DE STABILISATEUR) | 538 |
| AUTOCOLLANT (COMMANDE DE TRANSLATION) | 349 |
| AUTOCOLLANT (COMMANDE DE TRANSLATION) | 397 |
| AUTOCOLLANT (CONTACTEUR D'ALLUMAGE) | 115 |
| AUTOCOLLANT (CONTACTEUR DE DÉMARRAGE) | 758<br>760<br>805 |
| AUTOCOLLANT DE MISE EN GARDE | 804<br>805 |
| AUTOCOLLANT DE MISE EN GARDE (VÉRIN HAUTE PRESSION) | 409<br>412<br>416<br>420<br>424<br>428<br>432<br>436<br>487<br>807 |
| AUTOCOLLANT (DÉMARRAGE) | 115 |
| AUTOCOLLANT D'IDENTIFICATION (PANNEAU DE FUSIBLES) | 230<br>806 |
| AUTOCOLLANT (EN ROULEAU) (0,095M) | 806 |
| AUTOCOLLANT (GODET TOUS-TRAVAUX) | 394 |
| AUTOCOLLANT (GODET TOUS-TRAVAUX) | 806 |
| AUTOCOLLANT (GODET TOUS-TRAVAUX) (COMMANDE MÉCANIQUE DE GODET) | 392 |
| AUTOCOLLANT (INSTRUCTIONS) | 806 |
| AUTOCOLLANT (INSTRUCTIONS) (COMMANDE DE GODET TOUS-TRAVAUX) | 392 |
| AUTOCOLLANT-LEVAGE | 804 |
| AUTOCOLLANT-LEVAGE ET ARRIMAGE | 804 |

# INDEX


| Désignation | Page |
|---|---|
| | 807 |
| AUTOCOLLANT (PLAQUE DE COMMANDE) | 805 |
| AUTOCOLLANT (PLAQUE-NOM) | 346 |
| AUTOCOLLANT (RECIRCULATION D'AIR) | 700 |
| AUTOCOLLANT (SYSTÈME DE SÉCURITÉ DE LA MACHINE) | 115 |
| AUTOCOLLANT (VERROUILLAGE D'ARTICULATION CENTRALE/ FLÈCHE) | 805 |
| AUTOCOLLANT (VERRROUILLAGE DÉPORT LATÉRAL/ FLÈCHE) | 805 |
| AUTOCOLLANT (VITESSE VARIABLE) | 86 |
| | 805 |
| AUTOCOLLANT (20 KM/H) | 18 |
| | 19 |
| AVERTISSEUR DE RECUL (ASS) | 171 |
| AXE D'ESSIEU (ASS) | 218 |

## B

| Désignation | Page |
|---|---|
| BALAI D'ESSUIE-GLACE | 797 |
| BALAI D'ESSUIE-GLACE (ENS) | 797 |
| BANDE AUTOCOLLANTE (278CM) | 338 |
| BANDE AUTOCOLLANTE (400 CM) | 703 |
| | 704 |
| | 705 |
| | 706 |
| BATI - CHARGEUSE (ASS) | 322 |
| | 323 |
| BATI - DEPORT LATERAL (ASS) | 324 |
| BÂTI D'ORIENTATION (ASS) | 326 |
| | 329 |
| BATTERIE (ASS) | 104 |
| BATTERIE (ASS) | 106 |
| | 110 |
| BATTERIE (ASS) | 108 |
| BATTERIE (12 VOLTS) | 104 |
| | 106 |
| | 108 |
| | 110 |
| BLINDAGE D'ARBRE DE TRANSMISSION (ASS) | 331 |
| BLOC-CYLINDRES (ASS) | 29 |
| | 31 |
| BOITE DE VITESSES ET MONTAGE (ASS) | 245 |
| | 246 |
| BOÎTE MÉCANIQUE (ASS) | 248 |
| BOITE MECANIQUE (VERSION) | 247 |
| BOÎTE POWER SHIFT (ASS) | 254 |
| BOÎTE POWER SHIFT (VERSION) | 247 |
| *BOOM GP | 589 |
| BOUCHON AIMANTÉ | 222 |
| BOUCHON DE CARBURANT | 102 |
| BOUCHON DE MOTEUR (ASS) | 47 |
| | 48 |
| BOUCHON DE REMPLISSAGE D'HUILE MOTEUR (ASS) | 51 |
| BOUCHON DE REMPLISSAGE (RÉSERVOIR HYDRAULIQUE) | 539 |
| BOUCHON FILETÉ (CANALISATIONS DE FILTRE À HUILE DE MOTEUR) | 54 |
| BOUCHON MAGNÉTIQUE (ENS) | 227 |
| BOUCHON MAGNÉTIQUE (ENS) | 218 |
| BOUCHON-VIDANGE DU CARTER | 43 |
| BOUGIE DE PRECHAUFFAGE | 113 |
| BOUGIE DE PRÉCHAUFFAGE (ASS) | 113 |
| BOUTON DE DIRECTION (ASS) | 299 |
| BOUTON DE TEMPÉRATURE | 170 |
| BRAS DE LEVAGE (ASS) | 586 |
| BRAS DE PELLE RETRO (ASS) | 613 |
| BRAS TÉLESCOPIQUE (ASS) | 609 |
| | 611 |
| *BUCKET AR-MULTIPURPOSE | 620 |

## C

| Désignation | Page |
|---|---|
| CABINE (ASS) | 707 |
| | 709 |
| CABINE ROPS FERMÉE (VERSION) | 705 |
| | 706 |
| CABINE (VERSION) | 704 |
| CABINE (VERSION) | 703 |
| CABLAGE - CAPTEUR (ASS) | 214 |
| CABLAGE - CLIMATISEUR (ASS) | 173 |
| CABLAGE - PLATE-FORME (ASS) | 198 |
| CABLAGE - PLATE-FORME (ASS) | 196 |
| CABLAGE AR (ASS) | 203 |
| CABLAGE D'AVERTISSEUR DE STABILISATEUR (ASS) | 215 |
| CABLAGE DE CABINE (ASS) | 178 |
| | 180 |
| | 181 |
| CABLAGE DE CHANGEMENT DE VITESSES AUTOMATIQUE (ASS) | 176 |
| CÂBLAGE DE COMMANDE DE TRANSLATION (ASS) | 206 |
| | 208 |
| | 210 |
| | 212 |
| CABLAGE DE CONSOLE (ASS) | 183 |
| | 185 |
| CABLAGE DE CONSOLE (ASS) | 187 |
| CABLAGE DE DIRECTION (ASS) | 217 |
| CABLAGE DE MOTEUR (ASS) | 189 |
| CABLAGE DE PRISE DE FORCE | 202 |
| CÂBLAGE DE PRISE DE FORCE ET LIMITEUR (ASS) | 195 |
| CABLAGE DU CHAUFFAGE DE CABINE (ASS) | 193 |
| CACHE-SOUPAPES (ASS) | 25 |

# INDEX


| Désignation | Page |
|---|---|
| CACHE-SOUPAPES ET RANGÉE DE SOUPAPES (ASS) | 371 |
| CADENAS (ASS) | 802 |
| | 803 |
| CANALISATIONS - GODET TOUS-TRAVAUX (ASS) | 466 |
| | 468 |
| | 470 |
| | 472 |
| CANALISATIONS A COMMANDE PILOTE (ASS) | 474 |
| CANALISATIONS-CHARGEUSE AUXILIAIRE (ASS) | 462 |
| | 464 |
| CANALISATIONS D'AIR (ASS) | 80 |
| | 81 |
| | 82 |
| CANALISATIONS DE BRAS (ASS) | 501 |
| | 502 |
| | 505 |
| CANALISATIONS DE CARBURANT (ASS) | 90 |
| CANALISATIONS DE CHAUFFAGE (ASS) | 747 |
| CANALISATIONS DE COMMANDE DE MARCHE | 487 |
| CANALISATIONS DE DIRECTION (ASS) | 300 |
| CANALISATIONS DE PELLE RÉTRO (ASS) | 398 |
| | 400 |
| CANALISATIONS DE POMPE (ASS) | 477 |
| | 479 |
| | 482 |
| | 483 |
| | 484 |
| | 485 |
| CANALISATIONS DE RÉCHAUFFEUR DE LIQUIDE DE REFROIDISSEMENT | 749 |
| CANALISATIONS DE REFROIDIS. DE TRANSMISSION | 59 |
| | 61 |
| CANALISATIONS DE STABILISATEUR (ASS) | 497 |
| | 499 |
| CANALISATIONS DE VÉRIN DE GODET (ASS) | 441 |
| CANALISATIONS DE VÉRIN DE LEVAGE (ASS) | 446 |
| | 448 |
| | 450 |
| CANALISATIONS DE VERROUILLAGE DE DEPORT LATERALE | 489 |
| | 491 |
| | 493 |
| | 495 |
| CANALISATIONS DE VIDANGE (ASS) | 443 |
| | 444 |
| CANALISATIONS D'ORIENTATION (ASS) | 509 |
| | 511 |
| | 513 |
| | 516 |
| CANALISATIONS DU BRAS TELESCOPIQUE (ASS) | 445 |
| CANALISATIONS DU VÉRIN D'INCLINAISON (ASS) | 519 |
| | 521 |
| CANALISATIONS-RÉCHAUFFEUR ET CLIMATISEUR (ASS) | 749 |
| CANALISATIONS SECONDAIRES DE PELLE RÉTRO (ASS) | 402 |
| | 404 |
| | 405 |
| | 407 |
| | 408 |
| | 412 |
| | 416 |
| | 420 |
| | 424 |
| | 428 |
| | 432 |
| | 436 |
| CANALISATIONS-VALVE DE CONTROLE DE CHARGE | 451 |
| | 454 |
| | 458 |
| CAPOT DU MOTEUR (ASS) | 338 |
| CAPOT ET PROTECTION (ASS) | 336 |
| CARTER AV (ASS) | 37 |
| CARTER DE BRAS TÉLESCOPIQUE (ENS) | 592 |
| CARTER DE DIFFÉRENTIEL (ASS) | 227 |
| CARTER DE VOLANT (ASS) | 36 |
| CARTER ET BRIDE D'ESSIEU (ASS) | 234 |
| | 235 |
| CEINTURE DE SECURITE (ASS) | 762 |
| CHAPEAU | 267 |
| CHAPEAU (ENS) | 446 |
| | 459 |
| | 462 |
| CHAPEAU (ENS) (RADIATEUR) | 69 |
| | 72 |
| CHAPEAU (TIGE DE SOUPAPE) | 266 |
| CHARGEUSE (VERSION) | 597 |
| CHAUFFAGE DE CABINE (ASS) | 743 |
| CHAUFFAGE ET MONTAGE - CABINE (ASS) | 741 |
| CLAPET DE DECHARGE (ASS) | 260 |
| | 305 |
| | 571 |
| CLAPET DE DECHARGE (ASS) | 254 |
| CLAPET DE DECHARGE (ASS) | 559 |
| | 575 |
| CLAPET DE DECHARGE (ASS) (CONVERTISSEUR) | 248 |
| CLAPET DE DECHARGE (ASS) (PRESSION D'EMBRAYAGE) | 248 |

# INDEX


| Désignation | Page |
|---|---|
| CLAPET DE DECHARGE (PURGEUR D'AIR) | 237 |
| CLAPET (ENS) (EAU) | 698 |
| | 741 |
| CLÉ | 803 |
| CLÉ ÉLECTRONIQUE (ENS) (SÉCURITÉ) | 115 |
| CLIGNOTANT (ENS) | 198 |
| CLIMATISEUR (ASS) | 700 |
| CLIMATISEUR ET MONTAGE (ASS) | 698 |
| COMMANDE DE BOITE DE VITESSES (ASS) | 226 |
| COMMANDE DE DIFFÉRENTIEL - VERROUILLAGE (ASS) | 225 |
| COMMANDE DE DIRECTION (ASS) | 297 |
| | 298 |
| COMMANDE DE FREIN DE STATIONNEMENT (ASS) | 290 |
| | 291 |
| COMMANDE DE POIGNÉE (ASS) | 350 |
| | 351 |
| COMMANDE DE POSITION (ASS) | 112 |
| | 195 |
| COMMANDE DE RÉGULATEUR ET D'ACCÉLÉRATEUR (ASS) | 86 |
| COMMANDE DE TRANSLATION (VERSION) | 348 |
| | 349 |
| COMMANDE HYDRAULIQUE DE PÉDALE (ASS) | 367 |
| COMMANDE HYDRAULIQUE DE PÉDALE (ASS) | 365 |
| COMMANDE HYDRAULIQUE MANUELLE (ASS) | 352 |
| | 354 |
| | 356 |
| | 358 |
| | 359 |
| | 361 |
| | 362 |
| | 363 |
| | 364 |
| COMPARTIMENT DE BATTERIE (ASS) | 306 |
| | 307 |
| | 308 |
| | 309 |
| | 310 |
| COMPRESSEUR DE REFRIGERANT (ASS) | 714 |
| | 715 |
| COMPTE-TOURS ÉLECTRIQUE (ASS) | 703 |
| | 704 |
| | 781 |
| | 782 |
| COMPTE-TOURS ÉLECTRIQUE (ASS) | 705 |
| | 706 |
| CONDENSATEUR ET MONTAGE (RÉFRIGÉRANT) | 716 |
| CONNEXION (ASS) | 451 |
| CONSOLE AV (ASS) | 717 |
| | 718 |
| CONSOLE DE CONDUITE (ASS) | 719 |
| | 720 |
| CONSOLE LATÉRALE (ASS) | 721 |
| | 722 |
| | 723 |
| | 724 |
| | 725 |
| | 726 |
| CONTACTEUR DE DÉMARRAGE À CLÉ (ENS) | 760 |
| CONTACTEUR (ENS) | 393 |
| CONTACTEUR (ENS) (ADMISSION D'AIR) | 79 |
| CONTACTEUR (ENS) (BLOCAGE AU POINT MORT) | 183 |
| CONTACTEUR (ENS) (CLIGNOTANT DE DIRECTION) | 180 |
| CONTACTEUR (ENS) (COMMANDE DE TRANSLATION) | 208 |
| CONTACTEUR (ENS) (COMMANDE DE TRANSLATION STANDARD) | 397 |
| CONTACTEUR (ENS) (CRAN) | 392 |
| CONTACTEUR (ENS) (KLAXON) | 183 |
| CONTACTEUR (ENS) (RÉCHAUFFEUR) | 193 |
| CONTACTEUR (ENS) (SOUPAPE DE CHARGEUSE) | 394 |
| CONTACTEUR (ENS) (VERROUILLAGE HYDRAULIQUE) | 391 |
| CONTREPOIDS (ASS) | 312 |
| | 313 |
| | 314 |
| | 315 |
| COUPLEUR EXPRESS (ASS) | 677 |
| | 678 |
| | 679 |
| | 680 |
| | 681 |
| | 682 |
| COURONNE ET DIFFERENTIEL (ASS) | 227 |
| COURROIE TRAPEZOIDALE (COMPRESSEUR CLIMATISATION) | 715 |
| COUVERCLE (ASS) MONTANT | 730 |
| COUVERCLE-CLOISON PARE-FEU (ENS) | 728 |
| | 729 |
| COUVERCLE DE COLLECTEUR D'ADMISSION (ASS) | 76 |
| COUVERCLE DE LA CONSOLE (ASS) | 727 |
| CREPINE | 254 |
| CREPINE (CARTER DE BOITE DE VITESSES) | 250 |
| CULASSE (ASS) | 32 |
| | 33 |
| CULBUTERIE (ASS) | 50 |

# INDEX


| Désignation | Page |
|---|---|
| **D** | |
| DÉMARREUR ÉLECTRIQUE (ASS) | 166 |
| | 168 |
| DENT MONOBLOC (ASS) | 697 |
| DIFFERENTIEL (ASS) | 229 |
| DISJONCTEUR DE SECURITE (ENS) | 292 |
| DISTRIBUTEUR (ASS) | 559 |
| | 561 |
| | 563 |
| | 565 |
| | 567 |
| | 569 |
| | 571 |
| | 573 |
| | 575 |
| | 577 |
| DISTRIBUTEUR DE CHARGE (ASS) | 579 |
| DISTRIBUTEUR DOUBLE ÉLÉMENT (ASS) | 547 |
| | 548 |
| DISTRIBUTEUR HYDRAULIQUE AUXILIAIRE (ASS) | 544 |
| | 545 |
| | 546 |
| DISTRIBUTEUR TRIPLE ÉLÉMENT (ASS) | 549 |
| | 550 |
| DISTRIBUTEUR 4 ÉLÉMENTS (ASS) | 551 |
| | 552 |
| DISTRIBUTEUR 4 ÉLÉMENTS (VERSION) | 542 |
| DISTRIBUTEUR 5 ÉLÉMENTS (ASS) | 553 |
| | 554 |
| DISTRIBUTEUR 5 ÉLÉMENTS (VERSION) | 542 |
| | 543 |
| DISTRIBUTEUR 6 ÉLÉMENTS (ASS) | 556 |
| | 557 |
| DISTRIBUTEUR 6 ÉLÉMENTS (VERSION) | 543 |
| DISTRIBUTEURS ET MONTAGE (ASS) | 541 |
| **E** | |
| EAU DES CHEMISES - RECHAUFFEUR (ASS) | 114 |
| ÉCLAIRAGE - AVERTISSEUR (ASS) | 161 |
| ÉCLAIRAGE - FEUX DE ROUTE (ASS) | 144 |
| ÉCLAIRAGE - FEUX DE ROUTE (ASS) | 146 |
| | 149 |
| | 152 |
| | 155 |
| | 158 |
| ÉCLAIRAGE - GYROPHARE (ASS) | 163 |
| | 164 |
| ÉCLAIRAGE - PROJECTEURS (ASS) | 133 |
| | 136 |
| | 138 |
| | 140 |
| | 142 |
| ÉLÉMENT DE FILTRE (CARBURANT) | 98 |
| ÉLÉMENT DE FILTRE (ENS)-CARBURANT | 88 |
| ENSEMBLE DE TRANSFORM.-COMMANDE MANUELLE HYDR. | 369 |
| ENTRAÎNEMENT D'ACCOUPLEMENT FLEXIBLE (ASS) | 231 |
| ENTRAÎNEMENT DE VENTILATEUR (ASS) | 34 |
| ENTRAÎNEMENT POUR COURROIE (GYROPHARE) | 132 |
| ENTRAÎNEMENT POUR COURROIE (GYROPHARE) | 131 |
| ESSIEU AR (ASS) | 220 |
| ESSIEU MOTEUR ET DIRECTEUR (ASS) | 218 |
| ESSUIE-GLACE (ASS) | 797 |
| **F** | |
| FEUX ARRIÈRE ET FEUX D'ARRÊT | 129 |
| FEUX ARRIÈRE ET FEUX D'ARRÊT | 129 |
| | 130 |
| FILTRE | 559 |
| | 561 |
| | 563 |
| | 565 |
| | 567 |
| | 569 |
| | 571 |
| | 573 |
| | 575 |
| | 577 |
| | 698 |
| | 741 |
| FILTRE À AIR | 743 |
| FILTRE À AIR (AÉRATION DE LA CABINE) | 700 |
| FILTRE A AIR (ASS) | 73 |
| | 75 |
| FILTRE A CARBURANT (ASS) | 88 |
| FILTRE À HUILE (ENS) (BOÎTE DE VITESSES) | 247 |
| FILTRE À HUILE (ENS) (HYDRAULIQUE) (ININFLAMMABLE) | 396 |
| | 397 |
| FILTRE À HUILE (ENS) (NETTOYAGE/ GRANDE EFFICACITÉ) | 396 |
| | 397 |
| FILTRE A HUILE MOTEUR (ENS) | 51 |
| FILTRE (RENIFLARD DE RÉSERVOIR HYDRAULIQUE) | 539 |
| FLECHE - CANALISATIONS | 440 |
| FLECHE (ASS) | 588 |
| FLEXIBLE (RENIFLARD) | 25 |
| FOURCHE (ASS) | 686 |
| FOURCHE (VERSION) | 685 |

# INDEX


| Désignation | Page |
|---|---|
| FREIN DE MANOEUVRE - COMMANDE (ASS) | 292 |
| FREIN DE STATIONNEMENT (ASS) | 289 |
| FUSIBLE (10A) | 131 |
| | 132 |
| | 133 |
| | 181 |
| | 202 |
| FUSIBLE (10A) | 138 |
| FUSIBLE (10A) | 142 |
| | 173 |
| | 206 |
| | 208 |
| | 210 |
| | 212 |
| FUSIBLE (15A) | 133 |
| FUSIBLE (15A) | 136 |
| | 138 |
| FUSIBLE (15A) | 140 |
| | 142 |
| FUSIBLE (20 A) | 178 |
| FUSIBLE (5A) | 178 |
| | 217 |

## G

| Désignation | Page |
|---|---|
| GAINE | 391 |
| | 393 |
| GAINE D'AIR (ASS) | 735 |
| | 737 |
| | 738 |
| GARDE-BOUE AR (ASS) | 319 |
| GARDE-BOUE AV (ASS) | 317 |
| | 318 |
| GARNITURE POUR CABINE (ASS) | 783 |
| GLACE DE PORTIÈRE (ASS) | 793 |
| | 795 |
| GODET - MONTAGE (ASS) | 690 |
| | 691 |
| | 692 |
| GODET - MONTAGE (ASS) | 689 |
| GODET - VERSION D'EXPÉDITION | 694 |
| GODET NORMAL (ENS) | 621 |
| | 622 |
| | 623 |
| | 624 |
| GODET RETRO (ASS) | 625 |
| | 626 |
| | 627 |
| | 628 |
| | 629 |
| | 630 |
| | 631 |
| | 632 |
| | 633 |
| | 634 |
| | 635 |
| | 636 |
| | 637 |
| | 638 |
| | 639 |
| | 640 |
| | 641 |
| | 642 |
| | 643 |
| | 644 |
| | 645 |
| | 646 |
| | 647 |
| | 648 |
| | 649 |
| | 650 |
| | 651 |
| | 652 |
| | 653 |
| | 654 |
| | 655 |
| | 656 |
| | 657 |
| | 658 |
| | 659 |
| | 660 |
| | 661 |
| | 662 |
| | 663 |
| | 664 |
| | 665 |
| GODET TOUS-TRAVAUX (ASS) | 666 |
| | 667 |
| | 668 |
| | 669 |
| | 670 |
| | 672 |
| | 674 |
| | 675 |
| GODET TOUS-TRAVAUX (VERSION) | 615 |
| | 616 |
| GODET TOUS-TRAVAUX (VERSION) | 616 |
| | 617 |
| | 618 |
| | 619 |
| | 620 |
| GOULOTTE DE REMPLISSAGE D'HUILE DE TRANSMISSION | 232 |
| | 233 |
| GRAISSEUR | 586 |
| | 588 |
| | 596 |
| | 604 |
| | 668 |

# INDEX


| Désignation | Page |
|---|---|
| | 674 |
| | 675 |
| | 678 |
| GRAISSEUR (FILET 1/8-27) | 324 |
| | 527 |
| | 586 |
| | 613 |
| GRAISSEUR (FILET 1/8-27) | 689 |
| GRAISSEUR (FILET 1/8-27) | 609 |
| | 611 |
| GRAISSEUR (FILET 1/8-27) | 666 |
| | 667 |
| | 669 |
| GROUPE DE ROTATION DE POMPE | 536 |

## H

| | |
|---|---|
| HAUT-PARLEUR | 776 |
| HUILE MOTEUR - CARTER (ASS) | 43 |

## I

| | |
|---|---|
| INDICATEUR DE COLMATAGE DE FILTRE À AIR (ASS) | 78 |
| | 79 |
| INDICATEUR (ENS) | 187 |
| INSONORISATION (ASS) | 776 |
| INSONORISATION (VERSION) | 345 |
| INTERRUPTEUR - BOUTON-POUSSOIR (ENS) | 359 |
| INTERRUPTEUR - BOUTON-POUSSOIR (ENS) (POINT MORT DE LA BOÎTE DE VITESSES) | 226 |
| INTERRUPTEUR - CONTACTEUR (AVANCE À L'INJECTION) | 93 |
| INTERRUPTEUR - CONTACTEUR (40-DEG) (TEMPÉRATURE DU LIQUIDE DE REFROIDISSEMENT DU MOTEUR) | 96 |
| INTERRUPTEUR - THERMOSTAT | 700 |
| INTERRUPTEUR (ASS) | 391 |
| | 392 |
| | 394 |
| INTERRUPTEUR (ASS) (VERROUILLAGE HYDRAULIQUE) | 393 |
| INTERRUPTEUR BALANCIER (ENS) (COMMANDE DE TRANSLATION) | 206 |
| | 210 |
| | 212 |
| INTERRUPTEUR BALANCIER (ENS) (COMMANDE DE TRANSLATION) (PASSAGE DES VITESSES STANDARD) | 349 |
| INTERRUPTEUR BALANCIER (ENS) (FEUX DE DÉTRESSE) | 183 |
| INTERRUPTEUR BALANCIER (ENS) (PROJECTEUR ARRIÈRE) | 142 |
| INTERRUPTEUR BALANCIER (ENS) (PROJECTEUR AVANT) | 142 |
| INTERRUPTEUR BALANCIER (ENS) (VITESSE DE VENTILATEUR DE RÉCHAUFFEUR) | 193 |
| INTERRUPTEUR BALANCIER (ENS) (VITESSE DE VENTILATEUR DE RÉCHAUFFEUR) | 173 |
| INTERRUPTEUR ROTATIF (RETOUR AU CREUSAGE) | 214 |

## J

| | |
|---|---|
| JEU DE COURROIES TRAPEZOIDALES (COMPREND 2 COURROIES) | 703 |
| | 704 |
| | 705 |
| | 706 |
| | 711 |
| JOINT TORIQUE | 256 |
| | 445 |
| JOINT TORIQUE (RÉGULATEUR DE TEMPÉRATURE D'EAU) | 53 |

## K

| | |
|---|---|
| KIT - COMMANDE DE TRANSLATION | 397 |
| KIT - COUSSIN | 702 |
| KIT DE BLOC COULISSANT | 770 |
| | 772 |
| | 774 |
| KIT DE BOUGIE (12 BROCHES) | 183 |
| KIT DE BOUGIE (2 BROCHES) | 115 |
| | 133 |
| | 138 |
| | 144 |
| | 173 |
| | 181 |
| | 193 |
| | 198 |
| | 203 |
| | 210 |
| | 212 |
| | 215 |
| | 291 |
| KIT DE BOUGIE (2 BROCHES) | 261 |
| KIT DE BOUGIE (2 BROCHES) | 700 |
| KIT DE BOUGIE (3 BROCHES) | 112 |
| | 144 |
| | 178 |
| | 181 |
| KIT DE BOUGIE (4 BROCHES) | 133 |
| | 136 |
| | 138 |
| | 178 |
| | 181 |
| | 203 |

# INDEX


| Désignation | Page |
|---|---|
| | 210 |
| | 212 |
| | 215 |
| KIT DE BOUGIE (6 BROCHES) | 133 |
| | 138 |
| | 146 |
| | 149 |
| | 152 |
| | 178 |
| | 181 |
| | 203 |
| | 210 |
| | 212 |
| KIT DE BOUGIE (8 BROCHES) | 178 |
| | 183 |
| | 709 |
| KIT DE BOULONNERIE | 584 |
| KIT DE CAME (SENS INVERSE D'HORLOGE) | 289 |
| KIT DE CONTACTEUR (DÉMARREUR) | 166 |
| KIT DE COUSSINET | 220 |
| KIT DE CROISILLON | 218 |
| KIT DE CROISILLON ET ROULEMENT | 241 |
| | 242 |
| | 243 |
| | 244 |
| KIT DE JOINTS | 114 |
| KIT DE JOINTS (POMPE DOSEUSE DE DIRECTION) | 303 |
| KIT DE PORTEUR PLANÉTAIRE | 238 |
| KIT DE PRISE FEMELLE (12 BROCHES) | 176 |
| KIT DE PRISE FEMELLE (12 BROCHES) | 754 |
| KIT DE PRISE FEMELLE (2 BROCHES) | 181 |
| | 196 |
| | 203 |
| | 215 |
| | 217 |
| | 226 |
| | 256 |
| | 567 |
| | 569 |
| | 571 |
| KIT DE PRISE FEMELLE (2 BROCHES) | 359 |
| KIT DE PRISE FEMELLE (2 BROCHES) | 144 |
| | 171 |
| KIT DE PRISE FEMELLE (2 BROCHES) | 262 |
| | 263 |
| | 264 |
| | 265 |
| | 584 |
| | 585 |
| KIT DE PRISE FEMELLE (3 BROCHES) | 203 |
| | 391 |
| | 392 |
| KIT DE PRISE FEMELLE (3 BROCHES) | 214 |
| KIT DE PRISE FEMELLE (3 BROCHES) | 144 |
| | 165 |
| KIT DE PRISE FEMELLE (3 BROCHES) | 263 |
| | 264 |
| | 265 |
| KIT DE PRISE FEMELLE (4 BROCHES) | 115 |
| | 136 |
| | 138 |
| | 181 |
| | 193 |
| | 208 |
| KIT DE PRISE FEMELLE (4 BROCHES) | 210 |
| | 212 |
| KIT DE PRISE FEMELLE (4 BROCHES) | 129 |
| KIT DE PRISE FEMELLE (4 BROCHES) | 133 |
| KIT DE PRISE FEMELLE (4 BROCHES) (LATÉRAL) | 181 |
| KIT DE PRISE FEMELLE (6 BROCHES) | 133 |
| | 138 |
| | 181 |
| | 755 |
| | 797 |
| KIT DE PRISE FEMELLE (6 BROCHES) | 210 |
| | 212 |
| KIT DE PRISE FEMELLE (6 BROCHES) | 124 |
| | 126 |
| KIT DE PRISE FEMELLE (6 BROCHES) | 133 |
| KIT DE PRISE FEMELLE (8 BROCHES) | 178 |
| | 203 |
| | 753 |
| KIT DE REGLAGE | 702 |
| KIT DE RÉPARATION | 797 |
| KIT DE ROULEMENT À GALETS | 238 |
| KIT D'ENGRENAGE (DÉMARREUR) | 166 |
| KIT D'ENTRETIEN | 761 |
| KIT D'ENTRETIEN D'ACCUMULATEUR | 346 |
| KIT D'ETRIER DE FREIN | 289 |
| KLAXON ÉLECTRIQUE (ASS) | 745 |


## L


| | |
|---|---|
| LAME DE COUPE (ASS) | 683 |
| | 684 |
| LAMPE - FEUX AV (12 VOLTS) | 124 |
| | 126 |
| LAMPE - FEUX AV (12V, 60/55W) | 120 |
| | 122 |
| LAMPE - GYROPHARE (ASS) | 131 |
| | 132 |
| LAMPE - PHARE (ASS) | 117 |
| | 119 |
| LAMPE - PHARE (ASS) | 118 |
| LAMPE - PHARE ET CLIGNOTANT | 120 |
| | 122 |
| | 124 |
| | 126 |

# INDEX


| Désignation | Page |
|---|---|
| LAMPE (ENS) (TÉMOIN ROTATIF) | 132 |
| LAMPE (ENS) (12 VOLTS) | 115 |
| LAMPE-PLAQUE D'IMMATRICULATION (ASS) | 128 |
| LAVE-GLACE - VITRE (ASS) | 785 |
| LENTILLE | 117 |
| LENTILLE (ENS) | 120<br>122<br>124<br>126 |
| LENTILLE (ENS) | 126 |
| LENTILLE (ENS) (PROJECTEUR) | 118<br>119 |
| LENTILLE (JAUNE) | 131<br>132 |
| LENTILLE (JAUNE) | 120<br>122 |
| LENTILLE ORANGE | 124<br>126 |
| LENTILLE (SIGNAL D'ARRÊT/ CLIGNOTANT DE DIRECTION) | 130 |
| LENTILLE (TRANSPARENT) | 138 |
| LENTILLE (TRANSPARENT) | 138 |
| LENTILLE (TRANSPARENT) (PROJECTEUR) | 136 |
| LEVIER DE COMMANDE DE REGULATEUR (ASS) | 746 |
| LEVIER DE COMMANDE MANUELLE | 295 |
| LIAISON-EXPÉDITION (ASS) | 593 |
| *LINES GP-RETURN | 486 |

## M

| | |
|---|---|
| MANCHON | 803 |
| MANCHON DE JONCTION DE CABLES | 713 |
| MANOCONTACT | 169 |
| MANOCONTACT (ENS) | 206<br>208<br>210<br>212 |
| MANOCONTACT (ENS) (HAUTE - BASSE) | 173 |
| MODULE - TÉMOIN (ASS) | 753<br>754 |
| MONTAGE - IMMATRICULATION (ASS) | 342<br>343 |
| MONTAGE - POMPE HYDRAULIQUE (ASS) | 528 |
| MONTAGE DE BRAS (ASS) | 604 |
| MONTAGE DE CALE DE ROUE (VERSION) | 801 |
| MONTAGE DE CANALISATIONS (ASS) | 529<br>530<br>531<br>532 |
| MONTAGE DE MOTEUR (ASS) | 40 |
| MONTAGE DE MOTEUR ET BOÎTE (ASS) | 41<br>42 |
| MONTAGE DE VÉRIN (ASS) | 527 |
| MONTAGE D'ESSIEU (ASS) | 237 |
| MONTAGE-DISTRIBUTEUR (ASS) | 525<br>526 |
| MONTAGE DU TABLEAU DE BORD (ASS) | 756<br>757<br>758 |
| MONTAGE FOURCHE (ASS) | 693 |
| MONTAGE-SÉCURITÉ (ASS) | 115 |
| MONTAGE-SÉCURITÉ (ASS) (SÉCURITÉ MACHINE) | 115 |
| MOTEUR D'ESSUIE-GLACE (ASS) | 755 |
| MOTEUR (VERSION) | 20<br>21 |
| MOTEUR (VERSION PRINCIPALE) | 22<br>23 |

## O

| | |
|---|---|
| OEILLETONS DE LEVAGE MOTEUR (ASS) | 39 |

## P

| | |
|---|---|
| PARE-CHOCS AV (ASS) | 311 |
| PARE-POUSSIERE | 347<br>474 |
| PARE-SOLEIL | 784 |
| PELLE RÉTRO - BRAS NORMAL (VERSION) | 9<br>11<br>12<br>14 |
| PELLE RÉTRO - BRAS TÉLESCOPIQUE (VERSION) | 1<br>2<br>3<br>4<br>5<br>6<br>7<br>8 |
| PELLE RÉTRO - STABILISATEUR (ASS) | 606<br>607<br>608 |
| PELLE RÉTRO (VERSION) | 10<br>13 |
| PISTON ET BIELLE (ASS) | 45 |
| PLAFONNIER (ASS) | 776 |
| PLAQUE (IDENTIFICATION) | 17<br>18 |
| PLAQUE (IDENTIFICATION) | 18<br>19 |
| PLAQUE LATERALE RELECTRICE (ENS) | 809 |
| PLAQUE SIGNALETIQUE | 185<br>617<br>618<br>620 |

# INDEX


| Désignation | Page |
|---|---|
| | 806 |
| PLAQUE SIGNALÉTIQUE (ASS) | 799 |
| | 800 |
| PLAQUE SIGNALETIQUE (GODET) | 616 |
| | 617 |
| PLAQUE SIGNALETIQUE (NIVEAU DU GODET) (GODET) | 615 |
| PLAQUE SIGNALETIQUE (416D) | 183 |
| | 806 |
| PLAQUES SIGNALETIQUES ET AUTOCOLLANTS (ASS) | 804 |
| | 805 |
| PNEU - GROUPE DE VALVE | 266 |
| | 267 |
| POCHE A DOCUMENTS (ASS) | 713 |
| POMPE A EAU (ASS) | 63 |
| POMPE A HUILE MOTEUR (ASS) | 52 |
| POMPE A PISTONS (ASS) | 533 |
| POMPE D'AMORÇAGE DE CARBURANT (ASS) | 98 |
| POMPE DE BOÎTE DE VITESSES (ASS) | 250 |
| | 254 |
| POMPE DE REGULARISATION DE DEBIT (ASS) | 303 |
| POMPE D'INJECTION DE CARBURANT (ASS) | 92 |
| | 93 |
| | 96 |
| PORTE-BALAIS (ENS) | 166 |
| PORTE DE BATTERIE (ASS) | 316 |
| PORTIERE DROITE (ASS) | 733 |
| PORTIERE GAUCHE (ASS) | 731 |
| PRISE (ASS) | 165 |
| PROTECTEUR DES CANALISATIONS (ASS) | 334 |
| | 335 |
| PROTECTION - ÉCLAIRAGE (ASS) | 332 |
| | 333 |
| PROTECTION DE GODET (ASS) | 687 |
| | 688 |
| PROTECTION DE GODET (ASS) (AVANT) | 18 |
| | 19 |


## R


| Désignation | Page |
|---|---|
| RACCORD DE SOUPAPE (ASS) | 347 |
| RACCORD D'EAU (ASS) | 53 |
| RACCORD-RÉCHAUFFEUR ET CLIMATISEUR (ASS) | 58 |
| RADIATEUR ET REFROIDISSEUR D'HUILE HYDRAULIQUE (ASS) | 67 |
| | 69 |
| RADIATEUR ET REFROIDISSEUR D'HUILE HYDRAULIQUE (ASS) | 70 |
| | 72 |
| RADIATEUR ET VENTILATEUR (ASS) | 65 |
| | 66 |
| RALLONGE D'ÉCHAPPEMENT (ASS) | 77 |
| RÉFLECTEUR | 146 |
| | 149 |
| | 152 |
| | 155 |
| | 158 |
| RÉFLECTEUR (ASS) | 344 |
| REFROIDISSEUR D'HUILE MOTEUR (ASS) | 54 |
| REFROIDISSEUR HUILE MOTEUR ET SUPPORT DE FILTRE | 54 |
| RÉGULATEUR - PÉDALE (ASS) | 761 |
| RELAIS (ENS) (12 VOLTS) | 133 |
| | 173 |
| | 176 |
| | 189 |
| | 193 |
| | 206 |
| | 208 |
| | 217 |
| RELAIS (ENS) (12 VOLTS) | 140 |
| | 142 |
| RELAIS (ENS) (12 VOLTS) (ABAISSEMENT MOTEUR COUPÉ) | 181 |
| RELAIS (ENS) (12 VOLTS) (ABAISSEMENT MOTEUR COUPÉ, COMMANDE ANTI-TANGAGE) | 210 |
| | 212 |
| RELAIS (ENS) (12 VOLTS) (COMMANDE LATÉRALE) | 178 |
| RELAIS (ENS) (12 VOLTS) (ÉCLAIRAGE) | 136 |
| | 138 |
| RELAIS (ENS) (12 VOLTS) (PROJECTEUR STANDARD/ AUXILIAIRE) | 136 |
| | 138 |
| RELAIS (ENS) (12 VOLTS) (RÉCHAUFFEUR ET CLIMATISEUR) | 193 |
| RELAIS (ENS) (12 VOLTS) (SÉCURITÉ DU MOTEUR) | 115 |
| RELAIS (ENS) (12 VOLTS) (VITESSE RAPIDE) | 173 |
| RENIFLARD | 256 |
| RENIFLARD (BOÎTE DE VITESSES) | 249 |
| RENIFLARD (ESSIEU) | 218 |
| RÉSERVOIR DE CARBURANT (ASS) | 101 |
| | 102 |
| RÉSERVOIR DE CARBURANT ET MONTAGE (ASS) | 100 |
| RÉSERVOIR-FREIN (ASS) | 296 |
| RÉSERVOIR HYDRAULIQUE (ASS) | 539 |
| RESSORT (FLEXIBLE DE RENIFLARD) | 25 |
| RETROVISEUR - CABINE (ASS) | 784 |
| RÉTROVISEUR (ASS) | 751 |
| | 752 |
| REVÊTEMENT D'INSONORISATION (ASS) | 341 |

# INDEX


| Désignation | Page |
|---|---|
| ROTATION DE LA ROUE DU VENTILATEUR SOUFFLANT | 112 |
| | 806 |
| ROTATION DE LA ROUE DU VENTILATEUR SOUFFLANT (BRAS-E) | 365 |
| ROTATION DE LA ROUE DU VENTILATEUR SOUFFLANT (BRAS TÉLESCOPIQUE) | 806 |
| ROTATION DE LA ROUE DU VENTILATEUR SOUFFLANT (COMMANDE DE GODET) | 391 |
| | 392 |
| | 393 |
| | 394 |
| | 807 |
| ROTATION DE LA ROUE DU VENTILATEUR SOUFFLANT (DÉBIT DE RETOUR) | 408 |
| | 412 |
| | 416 |
| | 420 |
| | 424 |
| | 428 |
| | 432 |
| | 436 |
| | 806 |
| ROTATION DE LA ROUE DU VENTILATEUR SOUFFLANT (N. D'ÉTAPE) | 806 |
| ROUE ET PNEU (ASS) | 272 |
| | 273 |
| | 274 |
| | 275 |
| | 276 |
| | 277 |
| | 278 |
| | 279 |
| | 280 |
| | 281 |
| | 282 |
| | 283 |
| | 284 |
| | 285 |
| | 286 |
| | 287 |
| | 288 |
| ROUE ET PNEU (VERSION) | 267 |
| | 268 |
| | 269 |
| | 270 |
| | 271 |
| | 272 |

## S

| | |
|---|---|
| SEMELLE DE STABILISATEUR | 605 |
| SÉPARATEUR D'EAU (ASS) | 99 |
| SIÈGE (ASS) | 763 |
| | 765 |
| | 767 |
| SIÈGE AVEC SUSPENSION (ASS) | 770 |
| | 772 |
| | 774 |
| | 775 |
| | 778 |
| SILENCIEUX (ASS) | 83 |
| SONDE THERMIQUE | 189 |
| SOUPAPE - GAZ (CIRCUIT DE FREINAGE) | 346 |
| SOUPAPE - SOLÉNOÏDE (ASS) | 263 |
| | 264 |
| | 265 |
| | 584 |
| | 585 |
| SOUPAPE - SOLÉNOÏDE (ASS) | 262 |
| SOUPAPE - SOLÉNOÏDE (ASS) | 261 |
| SOUPAPE - SOLÉNOÏDE (ASS) (12 VOLTS) (RAPPORT AIR-CARBURANT) | 92 |
| SOUPAPE D'ARRÊT | 58 |
| | 390 |
| SOUPAPE D'ARRÊT (ASS) | 390 |
| SOUPAPE DE PRIORITE (ASS) | 305 |
| STABILISATEUR (VERSION) | 538 |
| SUPPORT DE FILTRE ET REFROIDISSEUR D'HUILE MOTEUR | 54 |
| SUPPORT D'EXPÉDITION (ASS) | 590 |
| | 591 |
| SUPPORT (ENS) | 104 |
| | 106 |
| SYNCHRONISEUR (ASS) | 248 |

## T

| | |
|---|---|
| TABLEAU DE BORD (ASS) | 760 |
| TAPIS DU PLANCHER (ASS) | 739 |
| | 740 |
| THERMOSTAT-TEMPÉRATURE D'EAU | 53 |
| TIMONERIE DE GODET RÉTRO (ASS) | 594 |
| | 596 |
| TOIT-ROPS OUVERT (ASS) | 712 |
| TOIT (VERSION) | 711 |
| TÔLE DE PLANCHER (ASS) | 320 |
| TRAINS PLANÉTAIRES-RÉDUCTEURS (ASS) | 238 |
| TRANSMISSION (VERSION) | 239 |
| | 240 |
| TURBOCOMPRESSEUR (ASS) | 84 |

## V

| | |
|---|---|
| *VALVE GP-CHECK | 558 |
| *VALVE GP-PUMP CONTROL | 581 |
| | 582 |
| VENTILATEUR ASPIRANT (ASS) | 56 |
| | 57 |

# INDEX


| Désignation | Page |
|---|---|
| VENTILATEUR (ENS) | 700 |
| | 743 |
| VÉRIN - GODET TOUS-TRAVAUX (ASS) | 382 |
| VERIN DE BRAS (ASS) | 385 |
| VERIN DE FLECHE (ASS) | 376 |
| VÉRIN DE GODET RÉTRO (ASS) | 372 |
| | 374 |
| VÉRIN DE LEVAGE (ASS) | 381 |
| VERIN DE STABILISATEUR (ASS) | 384 |
| VÉRIN D'INCLINAISON (ASS) | 388 |
| VÉRIN D'ORIENTATION (ASS) | 386 |
| | 387 |
| VÉRIN DU BRAS TELESCOPIQUE (ASS) | 378 |
| | 379 |
| VERIN (ENS) | 292 |
| VERROUILLAGE ANTI-VANDALISME (ASS) | 802 |
| | 803 |
| VERROUILLAGE DE COMMANDE HYDRAULIQUE À PIED (ASS) | 523 |
| VERROUILLAGE DE COMMANDE MANUELLE HYDRAUL. (ASS) | 524 |
| VERROUILLAGE DE STABILISATEUR (ASS) | 598 |
| VERROUILLAGE POUR L'EXPÉDITION (ASS) | 599 |
| | 600 |
| | 601 |
| | 602 |
| | 603 |
| VERROULLAGE - QUATRIEME VITESSE (ASS) | 236 |
| VERSION DE CHASSIS | 15 |
| VERSION DE TRANSFORMATION - HOMOLOGATION | 16 |
| | 17 |
| | 18 |
| | 19 |
| VERSION D'ENTRAÎNEMENT DE CHARGEUSE-PELLETEUSE | 230 |
| VERSION HYDRAULIQUE | 391 |
| | 392 |
| | 393 |
| | 394 |
| | 395 |
| | 396 |
| | 397 |
| VERSION NORMALE | 16 |
| VIDANGE - HYDRAULIQUE (ASS) | 390 |
| VILEBREQUIN - POULIE (ASS) | 49 |
| VILEBREQUIN (ASS) | 27 |
| VITRE DE CABINE (ASS) | 787 |
| | 789 |
| | 791 |
| VOLANT DE DIRECTION | 298 |
| VOLANT DE DIRECTION (ASS) | 304 |
| VOLANT MOTEUR (ASS) | 35 |

# INDICE


| Nombre | Página |
|---|---|
| **A** | |
| ACONDICIONADOR DE AIRE (GR) | 700 |
| ACONDICIONADOR DE AIRE Y MONTAJE (GR) | 698 |
| ACOPLADOR RÁPIDO (GR) | 677 |
| | 678 |
| | 679 |
| | 680 |
| | 681 |
| | 682 |
| ACOPLAMIENTO FLEXIBLE - MANDO DE (GR) | 231 |
| ACOPLAMIENTO (GR) | 370 |
| ACOPLAMIENTO HIDRÁULICO | 678 |
| ACUMULADOR DE CONTROL DE AMORTIGUACION (GR) | 346 |
| ACUMULADOR DEL ACONDICIONADOR DE AIRE (GR) | 749 |
| AGUA - CONEXIÓN DE (GR) | 53 |
| AGUA DE LAS CAMISAS - CALENTADOR DEL (GR) | 114 |
| AIRE - TUBERÍAS DE (GR) | 80 |
| | 81 |
| | 82 |
| ALFOMBRILLA DEL PISO (GR) | 739 |
| | 740 |
| ALOJAMIENTO GR-DIFERENCIAL | 227 |
| ALTAVOZ | 776 |
| ÁRBOL DE LEVAS (GR) | 24 |
| ASIENTO CON SUSPENSIÓN (GR) | 778 |
| ASIENTO (GR) | 763 |
| | 765 |
| | 767 |
| **B** | |
| BANCADA 5 (GR) | 553 |
| | 554 |
| BASE DEL FILTRO Y ACEITE REFRIGERANTE DE MOTOR | 54 |
| BASTIDOR DE DESPLAZAMIENTO LATERAL (GR) | 324 |
| BASTIDOR DE ROTACIÓN (GR) | 326 |
| | 329 |
| BASTIDOR DEL CARGADOR (GR) | 322 |
| | 323 |
| BATERÍA (GR) | 104 |
| | 106 |
| | 108 |
| | 110 |
| BATERÍA (12 VOLTIOS) | 104 |
| | 106 |
| | 108 |
| | 110 |
| BLOQUE DESLIZANTE-JUEGO | 770 |
| | 772 |
| | 774 |
| BLOQUE MOTOR (GR) | 29 |
| | 31 |
| BOCINA ELÉCTRICA (GR) | 745 |
| BOMBA - TUBERÍAS DE (GR) | 477 |
| | 479 |
| | 482 |
| | 483 |
| | 484 |
| | 485 |
| BOMBA DE ACEITE DEL MOTOR (GR) | 52 |
| BOMBA DE AGUA (GR) | 63 |
| BOMBA DE CEBADO DE COMBUSTIBLE (GR) | 98 |
| BOMBA DE INYECCIÓN DE COMBUSTIBLE (GR) | 92 |
| | 93 |
| | 96 |
| BOMBA DE LA TRANSMISIÓN (GR) | 250 |
| | 254 |
| BOMBA DE PISTONES (GR) | 533 |
| *BOOM GP | 589 |
| BRAZO DE RETROEXCAVADOR (GR) | 613 |
| BRAZO ESTÁNDAR DE RETROEXCAVADOR (CONFIG) | 9 |
| | 11 |
| | 12 |
| | 14 |
| BRAZO EXTENDIBLE DE RETROEXCAVADOR (CONFIG) | 1 |
| | 2 |
| | 3 |
| | 4 |
| | 5 |
| | 6 |
| | 7 |
| | 8 |
| BRAZO EXTENSIBLE (GR) | 609 |
| BRAZO EXTENSIBLE (GR) | 611 |
| *BUCKET AR-MULTIPURPOSE | 620 |
| BUJÍA INCANDESCENTE | 113 |
| BUJÍA INCANDESCENTE (GR) | 113 |
| **C** | |
| CABINA (CONFIG) | 703 |
| | 704 |
| CABINA (GR) | 707 |
| | 709 |
| CABLES DE CALEFACCIÓN (GR) | 193 |


* NO HAY TRADUCCION DISPONIBLE EN EL MOMENTO DE LA IMPRESION

# INDICE


| Nombre | Página |
|---|---|
| CABLES DE CAMBIO AUTOMATICO (GR) | 176 |
| CABLES DE CONTROL DE AMORTIGUACIÓN (GR) | 206 |
| | 208 |
| | 210 |
| | 212 |
| CABLES DE LA ALARMA DEL ESTABILIZADOR (GR) | 215 |
| CABLES DE LA CABINA (GR) | 178 |
| | 180 |
| | 181 |
| CABLES DE LA CONSOLA (GR) | 183 |
| CABLES DE LA CONSOLA (GR) | 185 |
| CABLES DE LA CONSOLA (GR) | 187 |
| CABLES DE LA DIRECCIÓN (GR) | 217 |
| CABLES DE LA PLATAFORMA (GR) | 196 |
| | 198 |
| CABLES DE SENSOR (GR) | 214 |
| CABLES DEL ACONDICIONADOR DE AIRE (GR) | 173 |
| CABLES DEL MOTOR (GR) | 189 |
| CABLES DEL POSICIONADOR Y DE DESCONEXIÓN (GR) | 195 |
| CABLES DEL RECEPTÁCULO DE FUERZA (GR) | 202 |
| CABLES POSTERIORES (GR) | 203 |
| CAJA DE BATERÍA | 306 |
| | 307 |
| | 308 |
| | 309 |
| | 310 |
| CAJA DE BRAZO EXTENSIBLE (CONJ) | 592 |
| CAJA DELANTERA (GR) | 37 |
| CALCOMANIA-AMARRAR | 804 |
| CALCOMANÍA (ARRANQUE) | 115 |
| CALCOMANÍA (CATERPILLAR) | 705 |
| | 706 |
| | 800 |
| CALCOMANÍA (CONTROL DE AMORTIGUACION) | 349 |
| | 397 |
| CALCOMANÍA (CONTROL DE CUCHARÓN) | 354 |
| CALCOMANÍA (CONTROL DE CUCHARÓN) | 805 |
| | 806 |
| CALCOMANÍA (CONTROL DE ESTABILIZADOR) | 538 |
| CALCOMANÍA (*CONTROL PLATE) | 805 |
| CALCOMANÍA (CUCHARÓN DE USO MULTIPLE) | 394 |
| CALCOMANÍA (CUCHARÓN DE USO MULTIPLE) | 806 |
| CALCOMANÍA (CUCHARÓN DE USO MULTIPLE) (CONTROL MECANICO DE CUCHARON) | 392 |
| CALCOMANÍA DE ADVERTENCIA | 112 |
| | 804 |
| | 805 |
| | 806 |
| CALCOMANÍA DE ADVERTENCIA (BRAZO-E) | 365 |
| CALCOMANÍA DE ADVERTENCIA (CILINDRO PARA ALTA PRESION) | 807 |
| CALCOMANÍA DE ADVERTENCIA (CILINDRO PARA ALTA PRESION) | 409 |
| | 412 |
| | 416 |
| | 420 |
| | 424 |
| | 428 |
| | 432 |
| | 436 |
| | 487 |
| CALCOMANÍA DE ADVERTENCIA (CONTROL DE CUCHARÓN) | 391 |
| | 392 |
| | 393 |
| | 394 |
| | 807 |
| CALCOMANÍA DE ADVERTENCIA (*EXTENDABLE STICK) | 806 |
| CALCOMANÍA DE ADVERTENCIA (FLUJO DE RETORNO) | 408 |
| | 412 |
| | 416 |
| | 420 |
| | 424 |
| | 428 |
| | 432 |
| | 436 |
| | 806 |
| CALCOMANÍA DE ADVERTENCIA (NO PISAR) | 806 |
| CALCOMANÍA DE IDENTIFICACIÓN (TABLERO DE FUSIBLES) | 230 |
| | 806 |
| CALCOMANÍA DE RAYAS (278CM) | 338 |
| CALCOMANÍA DE RAYAS (400CM) | 703 |
| | 704 |
| | 705 |
| | 706 |
| CALCOMANÍA-DIRECCIÓN EN TODAS LAS RUEDAS | 806 |
| CALCOMANÍA (INSTRUCCIÓN) | 806 |
| CALCOMANÍA (INSTRUCCIÓN) (CONTROL DE CUCHARON DE USO MULTIPLE) | 392 |
| CALCOMANÍA (INTERRUPTOR DE ARRANQUE) | 758 |


* NO HAY TRADUCCION DISPONIBLE EN EL MOMENTO DE LA IMPRESION

# INDICE


| Nombre | Página |
|---|---|
| | 760 |
| | 805 |
| CALCOMANÍA (INTERRUPTOR DE ENCENDIDO) | 115 |
| CALCOMANIA-LEVANTAMIENTO Y AMARRE | 804 |
| | 807 |
| CALCOMANIA-LEVANTAR | 804 |
| CALCOMANÍA (PATRON ESTANDAR/ CRUZADO) | 805 |
| CALCOMANÍA (PLACA, NOMBRE) | 346 |
| CALCOMANÍA (RECIRCULACIÓN DE AIRE) | 700 |
| CALCOMANÍA (SISTEMA DE SEGURIDAD DE LA MÁQUINA) | 115 |
| CALCOMANÍA (TRABA DE LA PLUMA/ DESPLAZAMIENTO LATERAL) | 805 |
| CALCOMANÍA (TRABA DE LA PLUMA/ PIVOTE CENTRAL) | 805 |
| CALCOMANÍA (VELOCIDAD VARIABLE) | 86 |
| | 805 |
| CALCOMANÍA (VOLUMEN) (.095M) | 806 |
| CALCOMANÍA (20 KM/HR) | 18 |
| | 19 |
| CALCOMANÍAS Y PLACAS DE IDENTIFICACIÓN (GR) | 804 |
| | 805 |
| CALEFACCIÓN DE LA CABINA (GR) | 743 |
| CALEFACCIÓN Y MONTAJE DE LA CABINA (GR) | 741 |
| CÁNCAMOS DE LEVANTAMIENTO DEL MOTOR (GR) | 39 |
| CANDADO (GR) | 802 |
| | 803 |
| CAPÓ DEL MOTOR (GR) | 338 |
| CAPO Y PROTECTOR (GR) | 336 |
| CARGA - ALTERNADOR DE (GR) | 103 |
| CARGADOR (CONFIG) | 597 |
| CÁRTER - COLECTOR DEL (GR) | 43 |
| CHASIS (CONFIG) | 15 |
| CIGÜEÑAL - POLEA DE (GR) | 49 |
| CIGÜEÑAL (GR) | 27 |
| CILINDRO (CONJ) | 292 |
| CILINDRO DE CUCHARÓN DE USO MÚLTIPLE (GR) | 382 |
| CILINDRO DE CUCHARÓN RETROEXCAVADOR (GR) | 372 |
| | 374 |
| CILINDRO DE LA PLUMA (GR) | 376 |
| CILINDRO DE LEVANTAMIENTO - TUBERÍAS DEL (GR) | 446 |
| | 448 |
| | 450 |
| CILINDRO DE LEVANTAMIENTO (GR) | 381 |
| CILINDRO DE ROTACIÓN (GR) | 386 |
| | 387 |
| CILINDRO DEL BRAZO EXTENSIBLE (GR) | 378 |
| | 379 |
| CILINDRO DEL BRAZO (GR) | 385 |
| CILINDRO ESTABILIZADOR (GR) | 384 |
| CINTURÓN DE SEGURIDAD (GR) | 762 |
| COLADOR | 254 |
| COLADOR (CAJA DE TRANSMISION) | 250 |
| COMBUSTIBLE - TANQUE DE (GR) | 101 |
| | 102 |
| COMPARTIMIENTO DE LITERATURA DE SERVICIO (GR) | 713 |
| COMPRESOR DE REFRIGERANTE (GR) | 714 |
| | 715 |
| CONDENSADOR DEL REFRIGERANTE Y MONTAJE (GR) | 716 |
| CONDUCTO DE AIRE (GR) | 735 |
| | 737 |
| | 738 |
| CONECTOR DE VALVULA (GR) | 347 |
| CONEXION DE CALENTADOR Y ACOND. DE AIRE (GR) | 58 |
| CONEXIÓN DE ENGRASE | 586 |
| | 588 |
| | 596 |
| | 604 |
| | 668 |
| | 674 |
| | 675 |
| CONEXIÓN DE ENGRASE (ROSCA DE 1/8-27) | 324 |
| | 527 |
| | 609 |
| | 611 |
| | 613 |
| CONEXIÓN DE ENGRASE (ROSCA DE 1/8-27) | 586 |
| | 666 |
| | 667 |
| | 669 |
| | 689 |
| CONFIG. DEL MANDO, CARGADOR RETROEXCAVADORA | 230 |
| CONFIGURACIÓN COMÚN | 16 |
| CONFIGURACIÓN DE MOTORES | 20 |
| | 21 |
| CONFIGURACIÓN DE TRANSFORMACIÓN PARA CERTIFICACIÓN | 16 |
| | 17 |
| | 18 |
| | 19 |
| CONJUNTO DE DESTELLADOR | 198 |


* NO HAY TRADUCCION DISPONIBLE EN EL MOMENTO DE LA IMPRESION

# INDICE


| Nombre | Página |
|---|---|
| CONJUNTO DE LLAVE, ELECTRONICA (SEGURIDAD) | 115 |
| CONSOLA DEL OPERADOR (GR) | 719 |
| | 720 |
| CONSOLA DELANTERA (GR) | 717 |
| | 718 |
| CONSOLA LATERAL (GR) | 721 |
| | 722 |
| | 723 |
| | 724 |
| | 725 |
| | 726 |
| CONTRAPESO (GR) | 312 |
| | 313 |
| | 314 |
| | 315 |
| CONTROL DE AMORTIGUACIÓN (CONFIG) | 348 |
| | 349 |
| CONTROL DE DIRECCIÓN (GR) | 297 |
| | 298 |
| CONTROL DE LA TRANSMISIÓN (GR) | 226 |
| CONTROL DE MANIJA (GR) | 350 |
| | 351 |
| CONTROL DE POSICION (GR) | 112 |
| | 195 |
| CONTROL DE TRABA DEL DIFERENCIAL (GR) | 225 |
| CONTROL DEL FRENO DE ESTACIONAMIENTO | 290 |
| | 291 |
| CONTROL DEL REGULADOR Y ACELERADOR (GR) | 86 |
| CONTROL HIDRÁULICO MANUAL (GR) | 352 |
| | 354 |
| | 356 |
| | 358 |
| | 359 |
| | 361 |
| | 362 |
| | 363 |
| | 364 |
| CONTROL MANUAL DE PALANCA (GR) | 295 |
| CONVERSION DE CONTROL DE MANO HIDRAULICO (GR) | 369 |
| CORREA TRAPEZOIDAL (COMPRESOR DE AIRE ACONDICIONADO) | 715 |
| CRISTAL | 117 |
| CRISTAL (AMBAR) | 120 |
| | 122 |
| | 131 |
| | 132 |
| CRISTAL (SEÑAL DE PARADA/GIRO) | 130 |
| CRISTAL (TRANSPARENTE) | 138 |
| CRISTAL (TRANSPARENTE) | 138 |
| CRISTAL (TRANSPARENTE) (REFLECTOR) | 136 |
| CUCHARÓN DE EMBARQUE (CONFIG) | 694 |
| CUCHARÓN DE USO GENERAL (CONJ) | 621 |
| | 622 |
| | 623 |
| | 624 |
| CUCHARÓN DE USO MÚLTIPLE (CONFIG) | 616 |
| | 617 |
| | 618 |
| | 619 |
| | 620 |
| CUCHARÓN DE USO MÚLTIPLE (CONFIG) | 615 |
| CUCHARÓN DE USO MÚLTIPLE (GR) | 667 |
| | 668 |
| | 669 |
| | 670 |
| | 672 |
| | 674 |
| | 675 |
| CUCHARÓN DE USO MÚLTIPLE (GR) | 666 |
| CUCHARÓN RETROEXCAVADOR (GR) | 625 |
| | 626 |
| | 627 |
| | 628 |
| | 629 |
| | 630 |
| | 631 |
| | 632 |
| | 633 |
| | 634 |
| | 635 |
| | 636 |
| | 637 |
| | 638 |
| | 639 |
| | 640 |
| | 641 |
| | 642 |
| | 643 |
| | 644 |
| | 645 |
| | 646 |
| | 647 |
| | 648 |
| | 649 |
| | 650 |
| | 651 |
| | 652 |
| | 653 |
| | 654 |
| | 655 |
| | 656 |


* NO HAY TRADUCCION DISPONIBLE EN EL MOMENTO DE LA IMPRESION

# INDICE


| Nombre | Página |
|---|---|
| | 657 |
| | 658 |
| | 659 |
| | 660 |
| | 661 |
| | 662 |
| | 663 |
| | 664 |
| | 665 |
| CUCHILLA (GR) | 683 |
| | 684 |
| CULATA DE CILINDROS (GR) | 32 |
| | 33 |

## D

| | |
|---|---|
| DETECTOR DE TEMPERATURA | 189 |
| DIENTE DE UNA PIEZA (UNI-TOOTH) (GR) | 697 |
| DIFERENCIAL (GR) | 229 |
| DIFERENCIAL Y CORONA (GR) | 227 |
| DOSIFICACIÓN - BOMBA DE (GR) | 303 |
| DRENAJE HIDRÁULICO (GR) | 390 |

## E

| | |
|---|---|
| EJE - GRUPO DE MONTAJE | 237 |
| EJE DE IMPULSIÓN Y DE DIRECCIÓN (GR) | 218 |
| EJE DE MANDO (GR) | 241 |
| | 242 |
| | 243 |
| | 244 |
| EJE DE TOMA DE FUERZA (GR) | 537 |
| EJE TRASERO (GR) | 220 |
| ELEMENTO DE FILTRO (COMBUSTIBLE) | 98 |
| ELEMENTO DE FILTRO DE COMBUSTIBLE (CONJ) | 88 |
| ENCHUFE DE CONECTOR (GR) | 165 |
| ENFRIADOR DE ACEITE DEL MOTOR (GR) | 54 |
| ENFRIADOR DE ACEITE DEL MOTOR Y BASE DEL FILTRO | 54 |
| ESTABILIZADOR (CONFIG) | 538 |
| ETIQUETA DE ADVERTENCIA (GR) | 799 |
| | 800 |
| EXTENSIÓN DEL ESCAPE (GR) | 77 |

## F

| | |
|---|---|
| FILTRO | 559 |
| | 561 |
| | 563 |
| | 565 |
| | 567 |
| | 569 |
| | 571 |
| | 573 |
| | 575 |
| | 577 |
| | 698 |
| | 741 |
| FILTRO DE ACEITE (CONJ) (HIDRAULICO) (RESISTENTE AL FUEGO) | 396 |
| | 397 |
| FILTRO DE ACEITE (CONJ) (LIMPIEZA/ALTA EFICIENCIA) | 396 |
| | 397 |
| FILTRO DE ACEITE (CONJ) (TRANSMISION) | 247 |
| FILTRO DE ACEITE (CONJ) (TRANSMISION) | 247 |
| FILTRO DE ACEITE DEL MOTOR (CONJ) | 51 |
| FILTRO DE AIRE | 743 |
| FILTRO DE AIRE (AIRE DE LA CABINA) | 700 |
| FILTRO DE AIRE (GR) | 73 |
| | 75 |
| FILTRO DE COMBUSTIBLE (GR) | 88 |
| FILTRO (RESPIRADERO DEL TANQUE) | 539 |
| FRENO DE ESTACIONAMIENTO (GR) | 289 |
| FRENO DE SERVICIO - CONTROL (GR) | 292 |
| FUNDA | 391 |
| | 393 |
| FUSIBLE (10 A) | 133 |
| | 138 |
| | 173 |
| | 181 |
| | 202 |
| | 208 |
| | 210 |
| | 212 |
| FUSIBLE (10-AMPERIOS) | 206 |
| FUSIBLE (10-AMPERIOS) | 131 |
| | 132 |
| | 142 |
| FUSIBLE (15 A) | 133 |
| | 136 |
| | 138 |
| FUSIBLE (15 AMPERIOS) | 140 |
| | 142 |
| FUSIBLE (20 A) | 178 |
| FUSIBLE (5 AMP) | 217 |
| FUSIBLE (5 AMP) | 178 |

## G

| | |
|---|---|
| GRUPO DE BRAZO DE LEVANTAMIENTO | 586 |
| GRUPO DE CLAVIJA, EJE | 218 |
| GRUPO DE CONEXION | 451 |
| GRUPO DE CONTROL DE PEDAL HIDRÁULICO | 365 |


* NO HAY TRADUCCION DISPONIBLE EN EL MOMENTO DE LA IMPRESION

# INDICE


| Nombre | Página |
|---|---|
| | 367 |
| GRUPO DE CUATRO VALVULAS (CONFIG) | 542 |
| GRUPO DE PESTAÑA Y RESINTO, EJE | 234 |
| | 235 |
| GRUPO DE PROTECTOR DEL CUCHARON | 687 |
| | 688 |
| GRUPO DE PROTECTOR DEL CUCHARON (*FRONT) | 18 |
| | 19 |
| GRUPO DE 3 VÁLVULAS HIDRÁULICAS | 549 |
| | 550 |
| GRUPO DE 4 VÁLVULAS HIDRÁULICAS | 551 |
| | 552 |
| GRUPO DE 5 VALVULAS (CONFIG) | 542 |
| | 543 |
| GRUPO DE 6 VALVULAS (CONFIG) | 543 |
| GRUPO GIRATORIO DE BOMBA | 536 |
| GRUPO PERILLA, DIRECCIÓN | 299 |
| GRUPO PLANETARIO, MANDO FINAL | 238 |
| GUARDABARROS DELANTERO (GR) | 317 |
| | 318 |
| GUARDABARROS TRASERO (GR) | 319 |
| GUARNICIONES DE LA CABINA (GR) | 783 |

## H

| | |
|---|---|
| HIDRÁULICA (CONFIG) | 391 |
| | 392 |
| | 393 |
| | 394 |
| | 397 |
| HIDRÁULICA (CONFIG) | 394 |
| | 395 |
| | 396 |
| HOJA DE LIMPIAPARABRISAS | 797 |
| HOJA DE LIMPIAPARABRISAS (CONJ) | 797 |
| HORQUILLA - GRUPO DE MONTAJE DE LA | 693 |
| HORQUILLA (CONFIG) | 685 |
| HORQUILLA (GR) | 686 |

## I

| | |
|---|---|
| IMPULSOR DE VENTILADOR (GR) | 34 |
| INCLINACIÓN HORIZONTAL - CILINDRO DE (GR) | 388 |
| INDICADOR (CONJ) | 187 |
| INDICADOR DE CAMBIO DE FILTRO DE ACEITE (GR) | 78 |
| | 79 |
| INSONORIZADOR (CONFIG) | 345 |
| INSONORIZADOR (GR) | 776 |
| INSTALACIÓN DE LA TRABA DE LA RUEDA | 801 |
| INSTALACION DE SEGURIDAD (GR) | 115 |
| INSTALACION DE SEGURIDAD (GR) (SEGURIDAD DE LA MÁQUINA) | 115 |
| INTERRUPTOR (AVANCE DE SINCRONIZACION) | 93 |
| INTERRUPTOR (CONJ) | 393 |
| INTERRUPTOR (CONJ) (ADMISION DE AIRE) | 79 |
| INTERRUPTOR (CONJ) (BOCINA) | 183 |
| INTERRUPTOR (CONJ) (CALEFACTOR) | 193 |
| INTERRUPTOR (CONJ) (CONTROL DE AMORT.) | 208 |
| INTERRUPTOR (CONJ) (CONTROL DE SUSPENSION-ESTANDAR) | 397 |
| INTERRUPTOR (CONJ) (DE TOPE) | 392 |
| INTERRUPTOR (CONJ) (SEÑAL DE VIRAJE) | 180 |
| INTERRUPTOR (CONJ) (TRABA EN NEUTRAL) | 183 |
| INTERRUPTOR (CONJ) (TRABA HIDRÁULICA) | 391 |
| INTERRUPTOR (CONJ) (VÁLVULA DEL CARGADOR) | 394 |
| INTERRUPTOR DE ARRANQUE CON LLAVE (CONJ) | 760 |
| INTERRUPTOR DE LÍMITE (CONJ) | 292 |
| INTERRUPTOR DE PRESIÓN (CONJ) | 206 |
| | 208 |
| | 210 |
| | 212 |
| INTERRUPTOR DE PRESIÓN (CONJ) (ALTA - BAJA) | 173 |
| INTERRUPTOR DE PRESIÓN (GR) | 169 |
| INTERRUPTOR DE RODILLO (CONJ) (REGRESO A POSICION DE EXCAVACION) | 214 |
| INTERRUPTOR DE VOLQUETE (CONJ) (CONTROL DE AMORTIGUACION) (CAMBIO ESTANDAR) | 349 |
| INTERRUPTOR DE VOLQUETE (CONJ) (LUZ DE TRABAJO DELANTERA) | 142 |
| INTERRUPTOR DE VOLQUETE (CONJ) (*REAR FLOOD) | 142 |
| INTERRUPTOR DE VOLQUETE (CONJ) (*RIDE CONTROL) | 206 |
| | 210 |
| | 212 |
| INTERRUPTOR DE VOLQUETE (CONJ) (RIESGO) | 183 |
| INTERRUPTOR DE VOLQUETE (CONJ) (VELOCIDAD DEL VENTILADOR DEL CALENTADOR) | 193 |
| INTERRUPTOR DE VOLQUETE (CONJ) (VELOCIDAD DEL VENTILADOR DEL CALENTADOR) | 173 |


* NO HAY TRADUCCION DISPONIBLE EN EL MOMENTO DE LA IMPRESION

# INDICE


| Nombre | Página |
|---|---|
| INTERRUPTOR DEL TERMOSTATO | 700 |
| INTERRUPTOR (GR) | 391 |
| | 392 |
| | 394 |
| INTERRUPTOR (GR) (TRABA HIDRÁULICA) | 393 |
| INTERRUPTOR PARA LA TEMPERATURA (GR) | 170 |
| INTERRUPTOR PULSADOR (CONJ) | 359 |
| INTERRUPTOR PULSADOR (CONJ) (TRANSMISION NEUTRAL) | 226 |
| INTERRUPTOR (40 GRADOS) (TEMPERATURA DE REFRIGERANTE DE MOTOR) | 96 |
| **J** | |
| JUEGO-ACUMULADOR DE SERVICIO | 346 |
| JUEGO DE AJUSTE DEL ASIENTO | 702 |
| JUEGO DE AMORTIGUADOR | 702 |
| JUEGO DE COJINETE DE RODILLOS | 238 |
| JUEGO DE COJINETES | 220 |
| JUEGO DE CONTACTOR (MOTOR DE ARRANQUE) | 166 |
| JUEGO DE CONTROL DE OPERACION | 397 |
| JUEGO DE CORREAS TRAPEZOIDALES (INCLUYE 2 CORREAS) | 703 |
| | 704 |
| | 705 |
| | 706 |
| | 711 |
| JUEGO DE CRUCETA | 218 |
| JUEGO DE CRUCETA Y COJINETE | 241 |
| | 242 |
| | 243 |
| | 244 |
| JUEGO DE ENCHUFE (12-CLAVIJAS) | 183 |
| JUEGO DE ENCHUFE (2 CLAVIJAS) | 115 |
| | 133 |
| | 138 |
| | 144 |
| | 173 |
| | 181 |
| | 193 |
| | 203 |
| | 210 |
| | 212 |
| | 215 |
| | 261 |
| | 291 |
| | 700 |
| JUEGO DE ENCHUFE (2 CLAVIJAS) | 198 |
| | 210 |
| | 212 |
| JUEGO DE ENCHUFE (3 CLAVIJAS) | 144 |
| | 178 |
| | 181 |
| JUEGO DE ENCHUFE (3 CLAVIJAS) | 112 |
| JUEGO DE ENCHUFE (4-CLAVIJA) | 136 |
| | 210 |
| | 212 |
| JUEGO DE ENCHUFE (4 CLAVIJAS) | 133 |
| | 138 |
| | 178 |
| | 181 |
| | 203 |
| | 215 |
| JUEGO DE ENCHUFE (6 CLAVIJAS) | 133 |
| | 138 |
| | 178 |
| | 181 |
| | 203 |
| JUEGO DE ENCHUFE (6 CLAVIJAS) | 146 |
| | 149 |
| | 152 |
| JUEGO DE ENCHUFE (6-CLAVIJAS) | 210 |
| | 212 |
| JUEGO DE ENCHUFE (6-CLAVIJAS) | 210 |
| | 212 |
| JUEGO DE ENCHUFE (8 CLAVIJAS) | 178 |
| | 709 |
| JUEGO DE ENCHUFE (8-CLAVIJAS) | 183 |
| JUEGO DE ENGRANAJES (MOTOR DE ARRANQUE) | 166 |
| JUEGO DE FRENO DE HORQUILLA | 289 |
| JUEGO DE LEVA (ROTACIÓN HACIA LA IZQUIERDA) | 289 |
| JUEGO DE RECEPTÁCULO (12 CLAVIJAS) | 754 |
| JUEGO DE RECEPTÁCULO (12-CLAVIJAS) | 176 |
| JUEGO DE RECEPTÁCULO (2 CLAVIJAS) | 181 |
| | 196 |
| | 203 |
| | 215 |
| | 217 |
| | 256 |
| | 262 |
| | 263 |
| | 264 |
| | 265 |
| | 567 |
| | 569 |
| | 571 |
| JUEGO DE RECEPTÁCULO (2 CLAVIJAS) | 171 |
| | 226 |
| JUEGO DE RECEPTÁCULO (2 CLAVIJAS) | 144 |
| | 359 |
| | 584 |
| | 585 |


* NO HAY TRADUCCION DISPONIBLE EN EL MOMENTO DE LA IMPRESION

# INDICE


| Nombre | Página |
|---|---|
| JUEGO DE RECEPTÁCULO (3 CLAVIJAS) | 203 |
| | 263 |
| | 264 |
| | 265 |
| JUEGO DE RECEPTÁCULO (3 CLAVIJAS) | 144 |
| | 214 |
| JUEGO DE RECEPTÁCULO (3 CLAVIJAS) | 165 |
| JUEGO DE RECEPTÁCULO (3-CLAVIJAS) | 391 |
| | 392 |
| JUEGO DE RECEPTÁCULO (4-CLAVIJA) | 115 |
| | 129 |
| | 136 |
| | 193 |
| | 208 |
| | 210 |
| | 212 |
| JUEGO DE RECEPTÁCULO (4 CLAVIJAS) | 181 |
| JUEGO DE RECEPTÁCULO (4 CLAVIJAS) | 133 |
| JUEGO DE RECEPTÁCULO (4 CLAVIJAS) | 138 |
| JUEGO DE RECEPTÁCULO (4 CLAVIJAS) (LADO) | 181 |
| JUEGO DE RECEPTÁCULO (6 CLAVIJAS) | 138 |
| | 181 |
| | 755 |
| | 797 |
| JUEGO DE RECEPTÁCULO (6 CLAVIJAS) | 133 |
| JUEGO DE RECEPTÁCULO (6 CLAVIJAS) | 124 |
| | 126 |
| JUEGO DE RECEPTÁCULO (6 CLAVIJAS) | 133 |
| JUEGO DE RECEPTÁCULO (6-CLAVIJAS) | 210 |
| | 212 |
| JUEGO DE RECEPTÁCULO (8 CLAVIJAS) | 178 |
| | 203 |
| JUEGO DE RECEPTÁCULO (8 CLAVIJAS) | 753 |
| JUEGO DE REPARACIÓN (TUBERÍAS DEL FRENO) | 797 |
| JUEGO DE SELLOS | 114 |
| JUEGO DE SELLOS (*STEERING METERING PUMP) | 303 |
| JUEGO DE SERVICIO | 761 |
| JUEGO DE TORNILLERÍA | 584 |
| JUEGO-PORTA PLANETARIO | 238 |

## L

| Nombre | Página |
|---|---|
| LÁMPARA (CONJ) (ADVERTENCIA DE ROTACIÓN) | 132 |
| LÁMPARA (CONJ) (12 VOLTIOS) | 115 |
| LÁMPARA DE BALIZA DE ADVERTENCIA (GR) | 131 |
| LÁMPARA DE BALIZA DE ADVERTENCIA (GR) | 132 |
| LÁMPARA DE FARO DELANTERO (12 VOLTIOS) | 124 |
| | 126 |
| LÁMPARA DE FARO DELANTERO (12 VOLTIOS, 60/55 VATIOS) | 120 |
| | 122 |
| LÁMPARA DE LUZ DELANTERA Y DE SEÑAL (GR) | 120 |
| | 122 |
| | 124 |
| | 126 |
| LAMPARA DE PLACA DE REGISTRO (GR) | 128 |
| LÁMPARA DEL TECHO (GR) | 776 |
| LÁMPARA (12 V) | 128 |
| LÁMPARA (12 VOLTIOS) | 185 |
| | 781 |
| | 782 |
| LÁMPARA (12 VOLTIOS) (MEDIDOR DE TEMPERATURA DEL REFRIGERANTE) | 187 |
| LÁMPARA (12 VOLTIOS) (MINIATURA) | 124 |
| | 126 |
| | 753 |
| LÁMPARA (12 VOLTIOS) (NIVEL DE COMBUSTIBLE) | 187 |
| LÁMPARA (12 VOLTIOS) (TEMPERATURA DE ACEITE DEL CONVERTIDOR) | 187 |
| LÁMPARA (12 VOLTIOS) (VOLTIMETRO) | 187 |
| LÁMPARA (12 VOLTIOS, 10 VATIOS) | 776 |
| LÁMPARA (12 VOLTIOS, 21 VATIOS) | 120 |
| | 122 |
| LÁMPARA (12 VOLTIOS) (21 VATIOS) | 124 |
| | 126 |
| LÁMPARA (12 VOLTIOS, 4 VATIOS) | 120 |
| | 122 |
| LÁMPARA (12 VOLTIOS, 55 VATIOS) | 131 |
| | 132 |
| | 136 |
| | 140 |
| | 142 |
| LÁMPARA (12 VOLTIOS, 55 VATIOS) | 118 |
| | 119 |
| LÁMPARA (12 VOLTIOS, 55 VATIOS) (REFLECTOR) | 136 |
| LÁMPARA (12 VOLTIOS/21 VATIOS) | 117 |
| LÁMPARA (12 VOLTIOS/21 VATIOS) (SEÑAL DE VIRAJE) | 130 |
| LÁMPARA (12 VOLTIOS/21/5 VATIOS) (PARADA) | 130 |
| LÁMPARA (12 VOLTIOS)(55 VATIOS) | 133 |
| LÁMPARA (12 VOLTIOS)(55 VATIOS) | 133 |
| LÁMPARA (12 VOLTIOS/55 VATIOS) | 138 |
| LÁMPARA (12 VOLTIOS)(55 VATIOS) | 133 |
| LAVAPARABRISAS DE LA VENTANA (GR) | 785 |


* NO HAY TRADUCCION DISPONIBLE EN EL MOMENTO DE LA IMPRESION

# INDICE


| Nombre | Página |
|---|---|
| LENTE AMBAR | 124 |
| | 126 |
| LIMPIAPARABRISAS DE LA VENTANA (GR) | 797 |
| *LINES GP-RETURN | 486 |
| LLAVE | 803 |
| LUCES DE ADVERTENCIA (GR) | 161 |
| LUCES DE DESPLAZAMIENTO (GR) | 144 |
| | 146 |
| | 149 |
| | 152 |
| | 155 |
| | 158 |
| LUCES DE PARADA Y COLA (GR) | 129 |
| | 130 |
| LUCES DE REFLECTOR (GR) | 133 |
| | 136 |
| | 138 |
| | 140 |
| | 142 |
| LUZ DE BALIZA (GR) | 163 |
| | 164 |

## M

| | |
|---|---|
| MANDO DE CORREA (BALIZA GIRATORIA DE ADVERTENCIA) | 131 |
| | 132 |
| MANGUERA (RESPIRADERO) | 25 |
| MANGUITO | 803 |
| MANGUITO DE EMPALME DE CABLE | 713 |
| MECANISMO DE VÁLVULAS (GR) | 50 |
| MÓDULO INDICADOR DE ADVERTENCIA (GR) | 753 |
| | 754 |
| MONTAJE DE BANCADA DE VALVULA (GR) | 525 |
| | 526 |
| MONTAJE DE CILINDRO (GR) | 527 |
| MONTAJE DE LA BOMBA HIDRÁULICA (GR) | 528 |
| MONTAJE DE TUBERIAS (GR) | 529 |
| | 530 |
| | 531 |
| | 532 |
| MONTAJE DEL BRAZO (GR) | 604 |
| MONTAJE DEL CUCHARÓN (GR) | 689 |
| MONTAJE DEL CUCHARÓN (GR) | 690 |
| | 691 |
| | 692 |
| MONTAJE DEL MOTOR (GR) | 40 |
| MONTAJE DEL MOTOR Y LA TRANSMISIÓN (GR) | 41 |
| | 42 |
| MONTAJE DEL TABLERO DE INSTRUMENTOS (GR) | 756 |
| | 757 |
| | 758 |
| MONTAJE-REGISTRO (GR) | 342 |
| | 343 |
| MONTAJE Y TRANSMISIÓN(GR) | 245 |
| | 246 |
| MONTAJE Y VALVULA DEL BANCO(GR) | 541 |
| MOTOR DE ARRANQUE ELÉCTRICO (GR) | 166 |
| | 168 |
| MOTOR-LIMPIAPARABRISAS (GR) | 755 |
| MOTOR PRIMARIO (CONFIG) | 22 |
| | 23 |

## P

| | |
|---|---|
| PALANCA DE CONTROL DEL REGULADOR (GR) | 746 |
| PARAGOLPES DELANTERO | 311 |
| PISTÓN Y BIELA (GR) | 45 |
| PLACA-CAT | 338 |
| PLACA DE CONTROL (ACONDICIONADOR DE AIRE) | 741 |
| | 806 |
| PLACA DE CONTROL (ACONDICIONADOR DE AIRE) | 698 |
| PLACA DE IDENTIFICACION | 17 |
| | 18 |
| | 19 |
| PLACA INDICADORA | 185 |
| | 617 |
| | 618 |
| | 620 |
| | 806 |
| PLACA INDICADORA (CUCHARÓN) | 616 |
| | 617 |
| PLACA INDICADORA (NIVEL DEL CUCHARON) (CUCHARÓN) | 615 |
| PLACA INDICADORA (416D) | 183 |
| | 806 |
| PLACA LATERAL REFLECTORA | 809 |
| PLANCHA DEL PISO (GR) | 320 |
| PLUMA (GR) | 588 |
| PORTAESCOBILLAS (CONJ) | 166 |
| POSABRAZOS (GR) | 702 |
| PRIORIDAD - VÁLVULA DE (GR) | 305 |
| PROTECTOR DE LAS LUCES (GR) | 332 |
| | 333 |
| PROTECTOR DE LAS TUBERÍAS (GR) | 334 |
| | 335 |
| PROTECTOR DEL EJE IMPULSOR (GR) | 331 |
| PUERTA DERECHA (GR) | 733 |
| PUERTA IZQUIERDA (GR) | 731 |


* NO HAY TRADUCCION DISPONIBLE EN EL MOMENTO DE LA IMPRESION

# INDICE


| Nombre | Página |
|---|---|
| **R** | |
| RADIADOR Y ENFRIADOR DE ACEITE HIDRÁULICO (GR) | 67<br>69<br>70<br>72 |
| RADIADOR Y VENTILADOR (GR) | 65<br>66 |
| REFLECTOR | 146<br>149<br>152<br>155<br>158 |
| REFLECTOR (GR) | 117<br>118<br>344 |
| REFLECTOR (GR) | 119 |
| REGULADOR - PEDAL DEL (GR) | 761 |
| REGULADOR DE TEMPERATURA DEL AGUA | 53 |
| RELÉ (CONJ) (12 VOLTIOS) | 133<br>140<br>142<br>173<br>176<br>189<br>193<br>206<br>208<br>217 |
| RELÉ (CONJ) (12 VOLTIOS) (ALTA VELOCIDAD) | 173 |
| RELÉ (CONJ) (12 VOLTIOS) (BAJADA DE MOTOR INOPERANTE) | 181 |
| RELÉ (CONJ) (12 VOLTIOS) (CALENTADOR Y ACONDICIONADOR DE AIRE) | 193 |
| RELÉ (CONJ) (12 VOLTIOS) (CONTROL LATERAL) | 178 |
| RELÉ (CONJ) (12 VOLTIOS) (ESTANDAR/REFLECTORES AUXILIARES) | 136 |
| RELÉ (CONJ) (12 VOLTIOS) (ESTANDAR/REFLECTORES AUXILIARES) | 138 |
| RELÉ (CONJ) (12 VOLTIOS) (LUCES) | 136<br>138 |
| RELÉ (CONJ) (12 VOLTIOS) (MOTOR DE SEGURIDAD) | 115 |
| RELÉ (CONJ) (12 VOLTIOS) (PUNTO MUERTO INFERIOR, CONTROL DE SUSPENSION) | 210<br>212 |
| RESORTE (RESPIRADERO DE MANGUERA) | 25 |
| RESPIRADERO | 256 |
| RESPIRADERO (EJE) | 218 |
| RESPIRADERO (TRANSMISION) | 249 |
| RETROCESO - ALARMA DE (GR) | 171 |
| RETROEXCAVADOR - ESTABILIZADOR DEL (GR) | 606<br>607<br>608 |
| RETROEXCAVADOR (CONFIG) | 10<br>13 |
| RETROVISOR (GR) | 751<br>752 |
| REVESTIMIENTO DE INSONORIZACION (GR) | 341 |
| RUEDA Y LLANTA (CONFIG) | 267<br>268<br>269<br>270<br>271<br>272 |
| RUEDA Y NEUMÁTICO (GR) | 272<br>273<br>274<br>275<br>276<br>277<br>278<br>279<br>280<br>281<br>282<br>283<br>284<br>285<br>286<br>287<br>288 |
| **S** | |
| SELLO ANULAR | 256<br>445 |
| SELLO ANULAR (REGULADOR DE TEMPERATURA DEL AGUA) | 53 |
| SEPARADOR DE AGUA (GR) | 99 |
| SERVOTRANSMISIÓN (CONFIG) | 247 |
| SERVOTRANSMISIÓN (GR) | 254 |
| SILENCIADOR (GR) | 83 |
| SINCRONIZADOR (GR) | 248 |
| SISTEMA ROPS DE CABINA CERRADA (CONFIG) | 705<br>706 |
| SOPORTE (CONJ) | 104<br>106 |


* NO HAY TRADUCCION DISPONIBLE EN EL MOMENTO DE LA IMPRESION

# INDICE


| Nombre | Página |
|---|---|
| SOPORTE PARA EL TRANSPORTE | 590 |
| | 591 |
| SUCCIÓN - VENTILADOR DE (GR) | 56 |
| | 57 |
| SUSPENSIÓN - ASIENTO CON (GR) | 770 |
| | 772 |
| | 774 |
| | 775 |

## T

| Nombre | Página |
|---|---|
| TABLERO DE INSTRUMENTOS (GR) | 760 |
| TACÓMETRO ELÉCTRICO (GR) | 703 |
| | 704 |
| | 705 |
| | 706 |
| TACÓMETRO ELÉCTRICO (GR) | 781 |
| | 782 |
| TANQUE DE COMBUSTIBLE Y GRUPO DE MONTAJE | 100 |
| TANQUE DEL SISTEMA DE FRENOS (GR) | 296 |
| TANQUE HIDRÁULICO (GR) | 539 |
| TAPA | 267 |
| TAPA CONTRA EL POLVO | 347 |
| | 474 |
| TAPA DE ADMISIÓN DE AIRE (GR) | 76 |
| TAPA DE LA BATERÍA (GR) | 316 |
| TAPA DE LA CONSOLA (GR) | 727 |
| TAPA DE MAMPARA PARAFUEGO (GR) | 728 |
| | 729 |
| TAPA DE POSTE (GR) | 730 |
| TAPA DEL MECANISMO DE VÁLVULAS (GR) | 25 |
| TAPA, LLENADO (TANQUE HIDRÁULICO) | 539 |
| TAPA PARA EL COMBUSTIBLE | 102 |
| TAPA (VASTAGO DE LA VÁLVULA) | 266 |
| TAPA Y GRUPO DE VALVULAS (GR) | 371 |
| TAPÓN (CONJ) | 446 |
| | 459 |
| | 462 |
| TAPON CONJ-MAGNETICO | 218 |
| | 227 |
| TAPÓN (CONJ) (RADIADOR) | 69 |
| | 72 |
| TAPON DE DRENAJE DE SUMIDERO | 43 |
| TAPÓN DEL MOTOR (GR) | 47 |
| | 48 |
| TAPÓN MAGNÉTICO | 222 |
| TAPÓN (TUBERIAS DE FILTRO DE ACEITE DEL MOTOR) | 54 |
| TECHO (CONFIG) | 711 |
| TECHO ROPS ABIERTO (GR) | 712 |
| TIRANTE DE EMBARQUE (GR) | 593 |
| TOPE DE CUCHARON (GR) | 695 |
| | 696 |
| TRABA CONTRA EL VANDALISMO (GR) | 802 |
| | 803 |
| TRABA DE CONTROL HIDRÁULICO MANUAL (GR) | 524 |
| TRABA DE CUARTA VELOCIDAD (GR) | 236 |
| TRABA DE TRANSPORTE DE LA MÁQUINA (GR) | 599 |
| | 600 |
| | 601 |
| | 602 |
| | 603 |
| TRABA DEL CONTROL HIDRÁULICO DEL PEDAL | 523 |
| TRABA DEL ESTABILIZADOR | 598 |
| TRANSMISION DIRECTA (CONFIG) | 247 |
| TRANSMISIÓN DIRECTA (GR) | 248 |
| TREN DE FUERZA (CONFIG) | 239 |
| | 240 |
| TUBERIAS AUXILIARES-RETROEXCAVADORA (GR) | 412 |
| | 416 |
| | 420 |
| | 424 |
| | 428 |
| | 432 |
| | 436 |
| TUBERIAS AUXILIARES-RETROEXCAVADORA (GR) | 402 |
| | 404 |
| | 405 |
| | 407 |
| | 408 |
| TUBERÍAS CON SERVOMANDO (GR) | 474 |
| TUBERIAS DE AUXILIAR DE CARGADOR (GR) | 462 |
| | 464 |
| TUBERIAS DE CALEFACCION | 749 |
| TUBERIAS DE CALENTEDOR Y ACONDICIONADOR DE AIRE (GR) | 749 |
| TUBERÍAS DE COMBUSTIBLE (GR) | 90 |
| TUBERIAS DE CONTROL DE LA SUSPENSIÓN (GR) | 487 |
| TUBERÍAS DE DIRECCIÓN (GR) | 300 |
| TUBERÍAS DE DRENAJE (GR) | 443 |
| | 444 |
| TUBERÍAS DE GIRO (GR) | 509 |
| | 511 |
| | 513 |
| | 516 |
| TUBERÍAS DE LA CALEFACCIÓN (GR) | 747 |
| TUBERÍAS DE LA PALANCA EXTENDIBLE (GR) | 445 |


* NO HAY TRADUCCION DISPONIBLE EN EL MOMENTO DE LA IMPRESION

# INDICE


| Nombre | Página |
|---|---|
| TUBERÍAS DE LA PLUMA (GR) | 440 |
| TUBERIAS DE LA RETROEXCAVADORA (GR) | 398 |
| | 400 |
| TUBERÍAS DE TRABA DEL DESPLAZAMIENTO LATERAL (GR) | 489 |
| | 491 |
| | 493 |
| | 495 |
| TUBERIAS DE VALVULA DE CONTROL DE CARGA (GR) | 451 |
| | 454 |
| | 458 |
| TUBERÍAS DEL BRAZO (GR) | 501 |
| | 502 |
| | 505 |
| TUBERÍAS DEL CILINDRO DE INCLINACIÓN (GR) | 519 |
| | 521 |
| TUBERÍAS DEL CILINDRO DEL CUCHARÓN (GR) | 441 |
| TUBERÍAS DEL CUCHARÓN DE USO MÚLTIPLE | 466 |
| | 468 |
| | 470 |
| | 472 |
| TUBERÍAS DEL ENFRIADOR DEL TREN DE FUERZA (GR) | 59 |
| | 61 |
| TUBERÍAS DEL ESTABILIZADOR (GR) | 497 |
| | 499 |
| TUBO DE LLENADO DE ACEITE DE LA TRANSMISIÓN (GR) | 232 |
| | 233 |
| TUBO DE LLENADO DE ACEITE (GR) | 51 |
| TURBOCOMPRESOR (GR) | 84 |


## V


| Nombre | Página |
|---|---|
| *VALVE GP-CHECK | 558 |
| *VALVE GP-PUMP CONTROL | 581 |
| | 582 |
| VÁLVULA AUXILIAR (GR) | 544 |
| | 545 |
| | 546 |
| VÁLVULA (CONJ) (AGUA) | 698 |
| | 741 |
| VÁLVULA DE ALIVIO (GR) | 305 |
| | 559 |
| | 575 |
| VÁLVULA DE ALIVIO (GR) | 260 |
| | 571 |
| VÁLVULA DE ALIVIO (GR) | 254 |
| VÁLVULA DE ALIVIO (GR) (CONVERTIDOR) | 248 |
| VÁLVULA DE ALIVIO (GR) (PRESIÓN DE EMBRAGUE) | 248 |
| VÁLVULA DE CONTROL DE CARGA (GR) | 579 |
| VÁLVULA DE CONTROL (GR) | 559 |
| | 569 |
| | 571 |
| VÁLVULA DE CONTROL (GR) | 561 |
| | 563 |
| | 565 |
| | 567 |
| | 573 |
| | 575 |
| | 577 |
| VÁLVULA DE CORTE | 58 |
| | 390 |
| VÁLVULA DE CORTE (GR) | 390 |
| VÁLVULA DE GAS | 346 |
| VÁLVULA DE SOLENOIDE (GR) | 261 |
| | 262 |
| | 263 |
| | 264 |
| | 265 |
| | 584 |
| | 585 |
| VÁLVULA DE SOLENOIDE (GR) (12 VOLTIOS) (CONTROL DE RELACIÓN DE COMBUSTIBLE/AIRE) | 92 |
| VÁLVULA DEL NEUMÁTICO (GR) | 267 |
| VÁLVULA DEL NEUMÁTICO (GR) | 266 |
| VALVULA (RESPIRADERO DE AIRE) | 237 |
| VÁLVULAS HIDRÁULICAS - GRUPO DE 2 | 547 |
| | 548 |
| VÁLVULAS HIDRÁULICAS - GRUPO DE 6 | 556 |
| | 557 |
| VARILLAJE DEL CUCHARÓN RETROEXCAVADOR (GR) | 594 |
| | 596 |
| VENTANA DE LA CABINA (GR) | 787 |
| | 789 |
| | 791 |
| VENTANA DE LA PUERTA (GR) | 793 |
| | 795 |
| VENTILADOR (CONJ) | 700 |
| | 743 |
| VIDRIO (CONJ) | 120 |
| | 122 |
| | 124 |
| | 126 |
| VIDRIO (CONJ) (FARO) | 119 |
| VIDRIO (CONJ) (REFLECTOR) | 118 |
| VISERA | 784 |
| VISERA (GR) | 784 |


* NO HAY TRADUCCION DISPONIBLE EN EL MOMENTO DE LA IMPRESION

# INDICE


| Nombre | Página | Nombre | Página |
|---|---|---|---|
| VOLANTE - CAJA DE (GR) | 36 | | |
| VOLANTE DE DIRECCIÓN | 298 | | |
| VOLANTE DE DIRECCIÓN (GR) | 304 | | |
| VOLANTE (GR) | 35 | | |

## Z

| | |
|---|---|
| ZAPATA DE ESTABILIZADOR (GR) | 605 |


* NO HAY TRADUCCION DISPONIBLE EN EL MOMENTO DE LA IMPRESION

# ÍNDICE


| Designação | Página |
|---|---|
| **A** | |
| ACOPLADOR RÁPIDO | 677, 678, 679, 680, 681, 682 |
| ACOPLAMENTO | 370 |
| ACUMULADOR - AR CONDICIONADO | 749 |
| ACUMULADOR DO SISTEMA DE ABSORÇÃO DE IMPACTOS | 346 |
| ALARME DE MARCHA À RÉ | 171 |
| ALAVANCA DE CONTROLE DO GOVERNADOR | 746 |
| ALAVANCA DE CONTROLE MANUAL | 295 |
| ALOJAMENTO - DIFERENCIAL | 227 |
| ALOJAMENTO DO BRAÇO EXTENSÍVEL | 592 |
| ALOJAMENTO E FLANGE - EIXO | 234, 235 |
| ALTERNADOR DE CORRENTE | 103 |
| ALTO-FALANTE | 776 |
| AQUECEDOR DA ÁGUA DO MOTOR | 114 |
| AQUECEDOR DA CABINE | 743 |
| AQUECEDOR DA CABINE E MONTAGEM | 741 |
| AR. DE EMBARQUE DA CAÇAMBA | 694 |
| ARMAÇÃO DESLIZANTE | 324 |
| ARMAÇÃO OSCILANTE | 326, 329 |
| ARRANJO BÁSICO | 16 |
| ARREFECEDOR - ÓLEO DO MOTOR | 54 |
| ARREFECEDOR DE ÓLEO DO MOTOR E BASE DO FILTRO | 54 |
| ARTICULAÇÃO DA CAÇAMBA DA RETROESCAVADEIRA | 594, 596 |
| ASSENTO | 763, 765, 767 |
| ASSENTO COM SUSPENSÃO | 770, 772, 774, 775 |
| **B** | |
| BATENTE - CAÇAMBA | 695, 696 |
| BATERIA | 104, 106, 108, 110 |
| BATERIA (12 V) | 104, 106, 108, 110 |
| BLOCO DO MOTOR | 29, 31 |
| BOCAL DE ENCHIMENTO DE ÓLEO DO MOTOR | 51 |
| BOCAL DE ENCHIMENTO DE ÓLEO DO TREM DE FORÇA | 232, 233 |
| BOMBA DA TRANSMISSÃO | 250, 254 |
| BOMBA DE ÁGUA | 63 |
| BOMBA DE ESCORVA DO COMBUSTÍVEL | 98 |
| BOMBA DE INJEÇÃO DO COMBUSTÍVEL | 92, 93, 96 |
| BOMBA DE ÓLEO - MOTOR | 52 |
| BOMBA DE PISTÃO | 533 |
| BOMBA REGULADORA | 303 |
| *BOOM GP | 589 |
| BORDA CORTANTE | 683, 684 |
| BOTÃO - DIREÇÃO | 299 |
| BRAÇO - CAÇAMBA RETRO-ESCAVADORA | 613 |
| BRAÇO DE LEVANTAMENTO | 586 |
| BRAÇO DO ASSENTO | 702 |
| BRAÇO ESTENDÍVEL | 609, 611 |
| *BUCKET AR-MULTIPURPOSE | 620 |
| BUJÃO - CONECTOR | 165 |
| BUJÃO - DRENAGEM DO RESERVATÓRIO | 43 |
| BUJÃO DO MOTOR | 47, 48 |
| BUJÃO MAGNÉTICO | 222 |
| BUZINA ELÉTRICA | 745 |
| **C** | |
| CABEÇOTE DO MOTOR | 32, 33 |
| CABINE | 703, 704, 707, 709 |
| CABINE - ESTRUTURA ROPS COBERTA | 705, 706 |
| CABOS/FIOS ELÉTRICOS - ABSORÇÃO DE IMPACTOS | 206, 208, 210, 212 |
| CABOS/FIOS ELÉTRICOS - ALARME DO ESTABILIZADOR | 215 |


* TRADUÇÃO NÃO DISPONÍVEL NO MOMENTO DA IMPRESSÃO

# ÍNDICE


| Designação | Página |
|---|---|
| CABOS/FIOS ELÉTRICOS - AQUECEDOR | 193 |
| CABOS/FIOS ELÉTRICOS - AR CONDICIONADO | 173 |
| CABOS/FIOS ELÉTRICOS - CABINE | 178 |
| | 180 |
| | 181 |
| CABOS/FIOS ELÉTRICOS - CONTROLE ELET. DAS MARCHAS | 176 |
| CABOS/FIOS ELÉTRICOS - DIREÇÃO | 217 |
| CABOS/FIOS ELÉTRICOS - MOTOR | 189 |
| CABOS/FIOS ELÉTRICOS - PLATAFORMA | 196 |
| | 198 |
| CABOS/FIOS ELÉTRICOS - POSICIONADOR E DESENGATE AUTOMÁTICO | 195 |
| CABOS/FIOS ELÉTRICOS - SENSOR | 214 |
| CABOS/FIOS ELÉTRICOS - TOMADA DE FORÇA | 202 |
| CABOS/FIOS ELÉTRICOS - TRASEIROS | 203 |
| CABOS/FIOS ELÉTRICOS DO CONSOLE | 183 |
| | 185 |
| | 187 |
| CAÇAMBA DE MÚLTIPLAS APLICAÇÕES | 615 |
| | 616 |
| | 617 |
| | 618 |
| | 619 |
| | 620 |
| | 666 |
| | 667 |
| | 668 |
| | 669 |
| | 670 |
| | 672 |
| | 674 |
| | 675 |
| CAÇAMBA DIANTEIRA | 597 |
| CAÇAMBA PARA APLICAÇÃO GERAL | 621 |
| | 622 |
| | 623 |
| | 624 |
| CAÇAMBA RETROESCAVADORA | 625 |
| | 626 |
| | 627 |
| | 628 |
| | 629 |
| | 630 |
| | 631 |
| | 632 |
| | 633 |
| | 634 |
| | 635 |
| | 636 |
| | 637 |
| | 638 |
| | 639 |
| | 640 |
| | 641 |
| | 642 |
| | 643 |
| | 644 |
| | 645 |
| | 646 |
| | 647 |
| | 648 |
| | 649 |
| | 650 |
| | 651 |
| | 652 |
| | 653 |
| | 654 |
| | 655 |
| | 656 |
| | 657 |
| | 658 |
| | 659 |
| | 660 |
| | 661 |
| | 662 |
| | 663 |
| | 664 |
| | 665 |
| CADEADO | 802 |
| | 803 |
| CADEADO CONTRA VANDALISMO | 802 |
| | 803 |
| CAIXA - BATERIA | 306 |
| | 307 |
| | 308 |
| | 309 |
| | 310 |
| CAIXA DIANTEIRA | 37 |
| CAIXA DO VOLANTE DO MOTOR | 36 |
| CALÇO DO ESTABILIZADOR | 605 |
| CAPÔ DO MOTOR | 338 |
| CAPÔ E PROTETOR | 336 |
| CÁRTER DO ÓLEO DO MOTOR | 43 |
| CHAPA DO PISO | 320 |
| CHASSI | 15 |
| CHASSI DIANTEIRO | 322 |
| | 323 |
| CHAVE | 803 |
| CHAVE - ELETRÔNICO (SEGURANÇA) | 115 |
| CHAVE INTERRUPTORA DE PARTIDA | 760 |
| CILINDRO | 292 |
| CILINDRO - CAÇAMBA DE MÚLTIPLAS APLICAÇÕES | 382 |


* TRADUÇÃO NÃO DISPONÍVEL NO MOMENTO DA IMPRESSÃO

# ÍNDICE


| Designação | Página |
|---|---|
| CILINDRO DA CAÇAMBA RETROESCAVADEIRA | 372, 374 |
| CILINDRO DA LANÇA | 376 |
| CILINDRO DE GIRO | 386, 387 |
| CILINDRO DE INCLINAÇÃO | 388 |
| CILINDRO DE LEVANTAMENTO | 381 |
| CILINDRO DO BRAÇO | 385 |
| CILINDRO DO BRAÇO ESTENDÍVEL | 378, 379 |
| CILINDRO DO ESTABILIZADOR | 384 |
| CINTO DE SEGURANÇA | 762 |
| COMANDO - ACOPLAMENTO FLEXÍVEL | 231 |
| COMANDO - RETROESCAVADEIRA | 230 |
| COMANDO DO VENTILADOR | 34 |
| COMANDO HIDRÁULICO | 391, 392, 393, 394, 395, 396, 397 |
| COMPARTIMENTO PARA LITERATURA | 713 |
| COMPRESSOR DE REFRIGERANTE | 714, 715 |
| CONDENSADOR DO REFRIGERANTE E MONTAGEM | 716 |
| CONDICIONADOR DE AR | 700 |
| CONDICIONADOR DE AR E MONTAGEM | 698 |
| CONECTOR | 451 |
| CONEXÃO - TUBO D'ÁGUA | 53 |
| CONEXÃO-AQUECEDOR & AR CONDICIONADO | 58 |
| CONEXÃO HIDRÁULICA | 678 |
| CONJUNTO DE 4 VÁLVULAS | 542 |
| CONSOLE DO OPERADOR | 719, 720 |
| CONSOLE LATERAL | 721, 722, 723, 724, 725, 726 |
| CONTRAPESO | 312, 313, 314, 315 |
| CONTROLE - PEDAL HIDRÁULICO | 365, 367 |
| CONTROLE - POSIÇÃO | 112, 195 |
| CONTROLE-CABO | 350, 351 |
| CONTROLE DA TRANSMISSÃO | 226 |
| CONTROLE DA TRAVA DO DIFERENCIAL | 225 |
| CONTROLE DE DIREÇÃO | 297, 298 |
| CONTROLE DO FREIO DE ESTACIONAMENTO | 290, 291 |
| CONTROLE DO FREIO DE SERVIÇO | 292 |
| CONTROLE DO GOVERNADOR E ACELERADOR | 86 |
| CONTROLE HIDRÁULICO MANUAL | 352, 354, 356, 358, 359, 361, 362, 363, 364 |
| CONVERSÃO-CONTROLE MANUAL HIDRÁULICO | 369 |
| CORREIA DE COMANDO (PISCA-PISCA DE ADVERTÊNCIA) | 131, 132 |
| CORREIA EM V (COMPRESSOR DE CONDIC. DE AR) | 715 |


## D


| Designação | Página |
|---|---|
| DECALQUE | 799, 800 |
| DECALQUE - ADVERTÊNCIA | 804, 805 |
| DECALQUE - ADVERTÊNCIA (CILINDRO DE ALTA PRESSÃO) | 409, 412, 416, 420, 424, 428, 432, 436, 487, 807 |
| DECALQUE - AMARRAÇÃO | 804 |
| DECALQUE - CAT | 338 |
| DECALQUE - CONTROLE (CONDICIONADOR DE AR) | 698, 741, 806 |
| DECALQUE - DIREÇÃO EM TODAS AS RODAS | 806 |


* TRADUÇÃO NÃO DISPONÍVEL NO MOMENTO DA IMPRESSÃO

# ÍNDICE


| Designação | Página |
|---|---|
| DECALQUE - IDENTIFICAÇÃO (PAINEL DE FUSÍVEIS) | 230 |
| DECALQUE - IDENTIFICAÇÃO (PAINEL DE FUSÍVEIS) | 806 |
| DECALQUE - INDICADOR | 185<br>617<br>618<br>620<br>806 |
| DECALQUE - INDICADOR (CAÇAMBA) | 616<br>617 |
| DECALQUE - INDICADOR (NÍVEL DA CAÇAMBA) (CAÇAMBA) | 615 |
| DECALQUE - INDICADOR (416D) | 183<br>806 |
| DECALQUE - INSTRUÇÃO | 112<br>806 |
| DECALQUE - INSTRUÇÃO (BRAÇO - E) | 365 |
| DECALQUE - INSTRUÇÃO (BRAÇO EXTENSÍVEL) | 806 |
| DECALQUE - INSTRUÇÃO (CONTROLE DA CAÇAMBA) | 391<br>392<br>393<br>394<br>807 |
| DECALQUE - INSTRUÇÃO (FLUXO DE RETORNO) | 408<br>412<br>416<br>420<br>424<br>428<br>432<br>436<br>806 |
| DECALQUE - INSTRUÇÃO (SEM DEGRAUS) | 806 |
| DECALQUE - LEVANTAMENTO | 804 |
| DECALQUE - LEVANTAMENTO E AMARRAÇÃO | 804<br>807 |
| DECALQUE - TIRA (278CM) | 338 |
| DECALQUE - TIRA (400 CM) | 703<br>704<br>705<br>706 |
| DECALQUE (CAÇAMBA PARA MÚLTIPLAS APLICAÇÕES) | 394 |
| DECALQUE (CAÇAMBA PARA MÚLTIPLAS APLICAÇÕES) | 806 |
| DECALQUE (CAÇAMBA PARA MÚLTIPLAS APLICAÇÕES) (CONTROLE MECÂNICO DA CAÇAMBA) | 392 |
| DECALQUE (CATERPILLAR) | 705<br>706<br>800 |
| DECALQUE (CHAVE INTERRUPTORA DE PARTIDA) | 805 |
| DECALQUE (CONTROLE DA CAÇAMBA) | 354<br>805<br>806 |
| DECALQUE (CONTROLE DO ESTABILIZADOR) | 538 |
| DECALQUE (GRANEL) (0,095 M) | 806 |
| DECALQUE (IGNIÇÃO) | 115 |
| DECALQUE (INST) | 806 |
| DECALQUE (INST) (CONTROLE DA CAÇAMBA DE APLICAÇÃO MÚLTIPLA) | 392 |
| DECALQUE (INTERRUPTOR DE PARTIDA) | 758<br>760 |
| DECALQUE (PADRÃO CRUZADO PADRÃO) | 805 |
| DECALQUE (PARTIDA) | 115 |
| DECALQUE (PIVÔ DE CONTROLE - TRAVA DA LANÇA) | 805 |
| DECALQUE (PLACA - NOME) | 346 |
| DECALQUE (PLACA DE CONTROLE) | 805 |
| DECALQUE (RECIRCULAÇÃO DE AR) | 700 |
| DECALQUE (SISHF - TRAVA DA LANÇA) | 805 |
| DECALQUE (SISTEMA DE ABSORÇÃO DE IMPACTOS) | 349<br>397 |
| DECALQUE (SISTEMA DE SEGURANÇA DA MÁQUINA) | 115 |
| DECALQUE (VELOCIDADE VARIÁVEL) | 86<br>805 |
| DECALQUE (20KM/HORA) | 18<br>19 |
| DIFERENCIAL | 229 |
| DIFERENCIAL E COROA | 227 |
| DRENO DO ÓLEO HIDRÁULICO | 390 |
| DUCTO DE AR | 735<br>737<br>738 |


## E


| | |
|---|---|
| EIXO-COMANDO DE VÁLVULA | 24 |
| EIXO DA TOMADA DE FORÇA | 537 |
| EIXO DE PROPULSÃO E DIREÇÃO | 218 |
| EIXO DE TRANSMISSÃO | 241<br>242<br>243<br>244 |
| ELEMENTO - FILTRANTE (COMBUSTÍVEL) | 98 |
| ELEMENTO - FILTRO DE COMBUSTÍVEL | 88 |
| ELO - EMBARQUE | 593 |


* TRADUÇÃO NÃO DISPONÍVEL NO MOMENTO DA IMPRESSÃO

# ÍNDICE


| Designação | Página |
|---|---|
| EMISSOR - TEMPERATURA | 189 |
| ESPELHO RETROVISOR | 751 |
| | 752 |
| ESTABILIZADOR | 538 |
| ESTABILIZADOR - RETROESCAVADEIRA | 606 |
| | 607 |
| | 608 |
| EXTENSÃO DO TUBO DE ESCAPE | 77 |

## F

| | |
|---|---|
| FAROL DIANTEIRO (12 V) | 124 |
| | 126 |
| FAROL DIANTEIRO (12-VOLTS, 60/55 WATTS) | 120 |
| | 122 |
| FILTRO | 559 |
| | 561 |
| | 563 |
| | 565 |
| | 567 |
| | 569 |
| | 571 |
| | 573 |
| | 575 |
| | 577 |
| | 698 |
| | 741 |
| FILTRO - AR | 743 |
| FILTRO - AR (AR DA CABINE) | 700 |
| FILTRO - COMBUSTÍVEL | 88 |
| FILTRO - ÓLEO DO MOTOR | 51 |
| FILTRO - ÓLEO (HIDRÁULICO) (RESISTENTE A FOGO) | 396 |
| | 397 |
| FILTRO - ÓLEO (LIMPEZA / ALTA EFICIÊNCIA) | 396 |
| | 397 |
| FILTRO - ÓLEO (TRANSMISSÃO) | 247 |
| FILTRO (RESPIRO DO TANQUE HIDRAULICO) | 539 |
| FREIO DE ESTACIONAMENTO | 289 |
| FUSÍVEL (10 A) | 133 |
| | 138 |
| | 173 |
| | 181 |
| | 202 |
| | 208 |
| | 210 |
| | 212 |
| FUSÍVEL (10 AMPERES) | 131 |
| | 132 |
| | 142 |
| | 206 |
| FUSÍVEL (15 A) | 133 |
| | 136 |
| | 138 |
| FUSÍVEL (15 AMPERES) | 140 |
| | 142 |
| FUSÍVEL (20 A) | 178 |
| FUSÍVEL (5 AMP) | 217 |
| FUSÍVEL (5 AMP) | 178 |

## G

| | |
|---|---|
| GARFO | 685 |
| | 686 |
| GR. DE CONVERSÃO - CERTIFICADO | 16 |
| | 17 |
| | 18 |
| | 19 |
| GR. DE INSTALAÇÃO - CALÇO DA RODA | 801 |
| GR. PLANETÁRIO - COMANDO FINAL | 238 |
| GRAXEIRA | 586 |
| | 588 |
| | 596 |
| | 604 |
| | 668 |
| | 674 |
| | 675 |
| GRAXEIRA (ROSCA 1/8-27 POL) | 324 |
| | 527 |
| | 586 |
| | 609 |
| | 611 |
| | 613 |
| | 666 |
| | 667 |
| | 669 |
| | 689 |
| GRUPO DE VÁLVULAS - SEIS | 543 |
| GRUPO DE VÁLVULAS - 5 | 542 |
| | 543 |
| GRUPO DE VÁLVULAS DE CONTROLE - CINCO | 553 |
| | 554 |
| GRUPO DE VÁLVULAS DE CONTROLE - DUPLO | 547 |
| | 548 |
| GRUPO DE VÁLVULAS DE CONTROLE - QUÁDRUPLO | 551 |
| | 552 |
| GRUPO DE VÁLVULAS DE CONTROLE - SEIS | 556 |
| | 557 |


* TRADUÇÃO NÃO DISPONÍVEL NO MOMENTO DA IMPRESSÃO

# ÍNDICE


| Designação | Página |
|---|---|
| GRUPO DE VÁLVULAS DE CONTROLE - TRIPLO | 549<br>550 |
| GRUPO ROTATIVO DA BOMBA | 536 |

## I

| | |
|---|---|
| ILUMINAÇÃO - RODOVIÁRIA | 144<br>146<br>149<br>152<br>155<br>158 |
| INDICADOR | 187 |
| INDICADOR - TROCA DO FILTRO DE AR | 78<br>79 |
| INSTALAÇÃO-SEGURANÇA | 115 |
| INSTALAÇÃO-SEGURANÇA (SEGURANÇA DA MÁQUINA) | 115 |
| INTERRUPTOR | 391<br>392<br>393<br>394 |
| INTERRUPTOR - BALANCIM (FAROL DIANTEIRO) | 142 |
| INTERRUPTOR - BALANCIM (FAROL TRASEIRO) | 142 |
| INTERRUPTOR - BALANCIM (PERIGO) | 183 |
| INTERRUPTOR - BALANCIM (SISTEMA DE ABSORÇÃO DE IMPACTOS) | 206<br>210<br>212 |
| INTERRUPTOR - BALANCIM (SISTEMA DE ABSORÇÃO DE IMPACTOS) (MUDANÇA PADRAO) | 349 |
| INTERRUPTOR - BALANCIM (VELOCIDADE DO VENTILADOR DO AQUECEDOR) | 193 |
| INTERRUPTOR - BALANCIM (VELOCIDADE DO VENTILADOR DO AQUECEDOR) | 173 |
| INTERRUPTOR - BOTÃO | 359 |
| INTERRUPTOR - BOTÃO (NEUTRALIZADOR DA TRANSMISSÃO) | 226 |
| INTERRUPTOR - LIMITADOR | 292 |
| INTERRUPTOR - PRESSÃO | 169<br>206<br>208<br>210<br>212 |
| INTERRUPTOR - PRESSÃO (ALTA - BAIXA) | 173 |
| INTERRUPTOR - ROLETAS (RETORNAR A EXCAVAÇÃO) | 214 |
| INTERRUPTOR - TEMPERATURA | 170 |
| INTERRUPTOR - TERMOSTATO | 700 |
| INTERRUPTOR (ADMISSÃO DE AR) | 79 |
| INTERRUPTOR (AQUECEDOR) | 193 |
| INTERRUPTOR (AVANÇO DE REGULAGEM) | 93 |
| INTERRUPTOR (BUZINA) | 183 |
| INTERRUPTOR (RETÉM) | 392 |
| INTERRUPTOR (SETA DE DIREÇÃO) | 180 |
| INTERRUPTOR (SISTEMA DE ABSORÇÃO DE IMPACTOS) | 208 |
| INTERRUPTOR (SISTEMA DE ABSORÇÃO DE IMPACTOS-PADRÃO) | 397 |
| INTERRUPTOR (TRAVA HIDRÁULICA) | 391<br>393 |
| INTERRUPTOR (TRAVA NEUTRA) | 183 |
| INTERRUPTOR (VÁLVULA DE CARREGADEIRA) | 394 |
| INTERRUPTOR (40 GRAUS) (TEMPERATURA DO LÍQUIDO ARREFECEDOR) | 96 |

## J

| | |
|---|---|
| JANELA DA CABINE | 787<br>789<br>791 |
| JOGO - EXCÊNTRICO (SENTIDO ANTI-HORÁRIO) | 289 |
| JOGO - PORTA SISTEMA PLANETÁRIO | 238 |
| JOGO - SERVIÇO DO ACUMULADOR | 346 |
| JOGO - SISTEMA DE ABSORÇÃO DE IMPACTOS | 397 |
| JOGO DE AJUSTADOR | 702 |
| JOGO DE ALMOFADA | 702 |
| JOGO DE BLOCO DESLIZADOR | 770<br>772<br>774 |
| JOGO DE CONTATO (MOTOR DE PARTIDA) | 166 |
| JOGO DE CORREIAS EM V (INCLUI 2 CORREIAS) | 703<br>704<br>705<br>706<br>711 |
| JOGO DE CRUZETA | 218 |
| JOGO DE CRUZETA E MANCAL | 241<br>242<br>243<br>244 |
| JOGO DE ENGRENAGEM (MOTOR DE PARTIDA) | 166 |
| JOGO DE FIXADORES | 584 |
| JOGO DE MANCAL | 220 |
| JOGO DE MANUTENÇÃO | 761 |
| JOGO DE PINCA DO FREIO | 289 |
| JOGO DE RECEPTÁCULO (12 PINOS) | 176 |


* TRADUÇÃO NÃO DISPONÍVEL NO MOMENTO DA IMPRESSÃO

# ÍNDICE


| Designação | Página |
|---|---|
| JOGO DE RECEPTÁCULO (12 PINOS) | 754 |
| JOGO DE RECEPTÁCULO (2 PINOS) | 144 |
| | 171 |
| | 181 |
| | 196 |
| | 203 |
| | 215 |
| | 217 |
| | 226 |
| | 256 |
| | 262 |
| | 263 |
| | 264 |
| | 265 |
| | 359 |
| | 567 |
| | 569 |
| | 571 |
| | 584 |
| | 585 |
| JOGO DE RECEPTÁCULO (3 PINOS) | 144 |
| | 165 |
| | 203 |
| | 214 |
| | 263 |
| | 264 |
| | 265 |
| | 391 |
| JOGO DE RECEPTÁCULO (3 PINOS) | 392 |
| JOGO DE RECEPTÁCULO (4 PINOS) | 115 |
| | 133 |
| | 136 |
| | 181 |
| | 193 |
| | 208 |
| | 210 |
| | 212 |
| JOGO DE RECEPTÁCULO (4 PINOS) | 129 |
| | 138 |
| JOGO DE RECEPTÁCULO (4 PINOS) (LATERAL) | 181 |
| JOGO DE RECEPTÁCULO (6 PINOS) | 133 |
| | 138 |
| | 181 |
| | 210 |
| | 212 |
| | 755 |
| | 797 |
| JOGO DE RECEPTÁCULO (6 PINOS) | 124 |
| | 126 |
| | 138 |
| JOGO DE RECEPTÁCULO (8 PINOS) | 178 |
| | 203 |
| | 753 |
| JOGO DE REPARO | 797 |
| JOGO DE RETENTOR | 114 |
| JOGO DE RETENTOR (BOMBA DE MEDIÇÃO DA DIREÇÃO) | 303 |
| JOGO DE ROLAMENTO DOS ROLETES | 238 |
| JOGO DE TOMADA DE CONEXÃO (12 PINOS) | 183 |
| JOGO DE TOMADA DE CONEXÃO (2 PINOS) | 115 |
| | 133 |
| | 138 |
| | 144 |
| | 173 |
| | 181 |
| | 193 |
| | 198 |
| | 203 |
| | 210 |
| | 212 |
| | 215 |
| | 261 |
| | 291 |
| | 700 |
| JOGO DE TOMADA DE CONEXÃO (3 PINOS) | 144 |
| | 178 |
| | 181 |
| JOGO DE TOMADA DE CONEXÃO (3 PINOS) | 112 |
| JOGO DE TOMADA DE CONEXÃO (4 PINOS) | 133 |
| | 136 |
| | 138 |
| | 178 |
| | 181 |
| | 203 |
| | 210 |
| | 212 |
| | 215 |
| JOGO DE TOMADA DE CONEXÃO (6 PINOS) | 133 |
| | 138 |
| | 146 |
| | 149 |
| | 152 |
| | 178 |
| | 181 |
| | 203 |
| | 210 |
| | 212 |
| JOGO DE TOMADA DE CONEXÃO (8 PINOS) | 178 |
| | 183 |
| | 709 |


## L


| | |
|---|---|
| LÂMINA | 797 |


* TRADUÇÃO NÃO DISPONÍVEL NO MOMENTO DA IMPRESSÃO

# ÍNDICE


| Designação | Página |
|---|---|
| LÂMINA DO LIMPADOR DE PÁRA-BRISA | 797 |
| LÂMPADA - FAROL | 117 |
| | 118 |
| | 119 |
| LÂMPADA - TETO | 776 |
| LÂMPADA (ALERTA GIRATÓRIO) | 132 |
| LÂMPADA DIANTEIRA E DE SINAL | 120 |
| | 122 |
| | 124 |
| | 126 |
| LAMPADA-PLACA DE REGISTRO | 128 |
| LÂMPADA (12 V) | 128 |
| | 781 |
| | 782 |
| LÂMPADA (12 V) (MINIATURA) | 124 |
| | 126 |
| | 753 |
| LÂMPADA (12 V) (21 WATT) | 124 |
| | 126 |
| LÂMPADA (12-VOLTS) | 115 |
| | 185 |
| LÂMPADA (12 VOLTS - 55 WATTS) | 133 |
| LÂMPADA (12-VOLTS) (MEDIDOR DA TEMPERATURA DO LÍQUIDO ARREFECEDOR) | 187 |
| LÂMPADA (12-VOLTS) (NÍVEL DO COMBUSTÍVEL) | 187 |
| LÂMPADA (12-VOLTS) (TEMPERATURA DO ÓLEO DO CONVERSOR) | 187 |
| LÂMPADA (12-VOLTS) (VOLTÍMETRO) | 187 |
| LÂMPADA (12 VOLTS, 10 WATTS) | 776 |
| LÂMPADA (12-VOLTS, 21-WATTS) | 120 |
| | 122 |
| LÂMPADA (12-VOLTS, 4-WATTS) | 120 |
| | 122 |
| LÂMPADA (12 VOLTS, 55 WATTS) | 132 |
| | 136 |
| LÂMPADA (12 VOLTS, 55 WATTS) | 118 |
| | 119 |
| LÂMPADA (12-VOLTS, 55-WATTS) | 131 |
| | 140 |
| | 142 |
| LÂMPADA (12 VOLTS, 55 WATTS) (FAROL) | 136 |
| LÂMPADA (12 VOLTS/21 WATTS) | 117 |
| LÂMPADA (12 VOLTS/21 WATTS) (SETA DE DIREÇÃO) | 130 |
| LÂMPADA (12 VOLTS/21/5 WATTS) (PARAR) | 130 |
| LÂMPADA (12 VOLTS/55 WATTS) | 138 |
| LANÇA | 588 |
| LAVADOR DO VIDRO | 785 |
| LENTE | 117 |
| | 120 |
| | 122 |
| | 124 |
| | 126 |
| LENTE ÂMBAR | 124 |
| | 126 |
| LENTE (ÂMBER) | 120 |
| | 122 |
| | 131 |
| | 132 |
| LENTE (FAROL) | 118 |
| LENTE (FAROL DIANTEIRO) | 119 |
| LENTE (SINAL DE PARADA/CURVA) | 130 |
| LENTE (TRANSPARENTE) | 138 |
| LENTE (TRANSPARENTE) (FAROL) | 136 |
| LEVANTAMENTO DO MOTOR | 39 |
| LIMPADOR DO VIDRO | 797 |
| *LINES GP-RETURN | 486 |
| LISTRA DA CABINE | 783 |
| LUVA | 803 |
| LUVA DE JUNÇÃO DE CABO | 713 |
| LUZ GIRATÓRIA DE ALARME | 131 |
| | 132 |
| LUZ INTERMITENTE | 198 |
| LUZ TRASEIRA E DE FREIO | 129 |
| | 130 |


## M


| | |
|---|---|
| MANGUEIRA (RESPIRO) | 25 |
| MECANISMO DAS VÁLVULAS | 50 |
| MÓDULO - INDICADOR DE ALARME | 753 |
| | 754 |
| MOLA (MANGUEIRA DO RESPIRO) | 25 |
| MONTAGEM - BANCO DE VÁLVULAS | 525 |
| | 526 |
| MONTAGEM - BOMBA HIDRÁULICA | 528 |
| MONTAGEM - BRAÇO | 604 |
| MONTAGEM - CAÇAMBA | 689 |
| | 690 |
| | 691 |
| | 692 |
| MONTAGEM - CILINDRO | 527 |
| MONTAGEM - GARFO | 693 |
| MONTAGEM - MOTOR | 40 |
| MONTAGEM - MOTOR E TRANSMISSÃO | 41 |
| | 42 |
| MONTAGEM - PAINEL DE INSTRUMENTOS | 756 |
| | 757 |
| | 758 |
| MONTAGEM - TUBOS | 529 |
| | 530 |
| | 531 |
| | 532 |
| MONTAGEM DA PLACA DE REGISTRO | 342 |


* TRADUÇÃO NÃO DISPONÍVEL NO MOMENTO DA IMPRESSÃO

# ÍNDICE


| Designação | Página |
|---|---|
| | 343 |
| MONTAGEM DO EIXO | 237 |
| MOTOR | 20 |
| | 21 |
| MOTOR - LIMPADOR DO VIDRO | 755 |
| MOTOR ELÉTRICO DE PARTIDA | 166 |
| | 168 |
| MOTOR PRIMÁRIO | 22 |
| | 23 |

## P

| | |
|---|---|
| PAINEL DE INSTRUMENTOS | 760 |
| PÁRA-CHOQUE DIANTEIRO | 311 |
| PÁRA-LAMA DIANTEIRO | 317 |
| | 318 |
| PÁRA-LAMA TRASEIRO | 319 |
| PÁRA-SOL | 784 |
| PÁRA-SOL DA CABINE | 784 |
| PEDAL DO GOVERNADOR | 761 |
| PINO - EIXO | 218 |
| PISTÃO E BIELA | 45 |
| PLACA DE IDENTIFICAÇÃO | 17 |
| | 18 |
| | 19 |
| PLACA E DECALQUE | 804 |
| | 805 |
| PLACA LATERAL REFLETIVA | 809 |
| POLIA DO VIRABREQUIM | 49 |
| PORTA - LADO DIREITO | 733 |
| PORTA - LADO ESQUERDO | 731 |
| POSTO DE CONTROLE/CONSOLE DIANTEIRO | 717 |
| | 718 |
| PROTETOR - CAÇAMBA | 687 |
| | 688 |
| PROTETOR - CAÇAMBA (DIANTEIRO) | 18 |
| | 19 |
| PROTETOR - EIXO DE TRANSMISSÃO | 331 |
| PROTETOR - ILUMINAÇÃO | 332 |
| | 333 |
| PROTETOR - TUBOS | 334 |
| | 335 |
| PROTETOR DE BORRACHA CONTRA POEIRA | 391 |
| | 393 |
| PURIFICADOR DE AR | 73 |
| | 75 |

## R

| | |
|---|---|
| RADIADOR E ARREFECEDOR DO ÓLEO HIDRÁULICO | 67 |
| | 69 |
| | 70 |
| | 72 |
| RADIADOR E VENTILADOR | 65 |
| | 66 |
| REDUÇÃO DE RUÍDO | 776 |
| REFLETOR | 146 |
| | 149 |
| | 152 |
| | 155 |
| | 158 |
| | 344 |
| REGULADOR DE TEMPERATURA DA ÁGUA | 53 |
| RELÉ (CONJ) (12 V) | 133 |
| | 140 |
| | 142 |
| | 173 |
| | 176 |
| | 193 |
| | 206 |
| | 208 |
| | 217 |
| RELÉ (CONJ) (12 V) (ABAIXAMENTO DO MOTOR DESLIGADO) | 181 |
| RELÉ (CONJ) (12 V) (ALTA VELOCIDADE) | 173 |
| RELÉ (CONJ) (12 V) (AQUECEDOR E COND AR) | 193 |
| RELÉ (CONJ) (12 V) (CONTROLE DE PERCURSO INFERIOR, MOTOR INOPERANTE) | 210 |
| | 212 |
| RELÉ (CONJ) (12 V) (CONTROLE LATERAL) | 178 |
| RELÉ (CONJ) (12 V) (FAROL PADRAO / AUXILIAR) | 136 |
| | 138 |
| RELÉ (CONJ) (12 V) (ILUMINAÇÃO) | 136 |
| | 138 |
| RELÉ (CONJ) (12-VOLTS) | 189 |
| RELÉ (CONJ) (12-VOLTS) (MOTOR DE SEGURANÇA) | 115 |
| RESPIRO | 256 |
| RESPIRO (EIXO) | 218 |
| RESPIRO (TRANSMISSÃO) | 249 |
| RETENTOR DE ANEL-O | 256 |
| | 445 |
| RETENTOR DE ANEL-O (REGULADOR DA TEMPERATURA DA ÁGUA) | 53 |
| RETROESCAVADEIRA - BRAÇO ESTENDÍVEL | 1 |
| | 2 |
| | 3 |
| | 4 |
| | 5 |


* TRADUÇÃO NÃO DISPONÍVEL NO MOMENTO DA IMPRESSÃO

# ÍNDICE


| Designação | Página |
|---|---|
| | 6 |
| | 7 |
| | 8 |
| RETROESCAVADEIRA - BRAÇO PADRÃO | 9 |
| | 11 |
| | 12 |
| | 14 |
| RETROESCAVADORA | 10 |
| | 13 |
| REVESTIMENTO PARA REDUÇÃO DE BARULHO | 341 |
| RODA E PNEU | 267 |
| | 268 |
| | 269 |
| | 270 |
| | 271 |
| | 272 |
| | 273 |
| | 274 |
| | 275 |
| | 276 |
| | 277 |
| | 278 |
| | 279 |
| | 280 |
| | 281 |
| | 282 |
| | 283 |
| | 284 |
| | 285 |
| | 286 |
| | 287 |
| | 288 |
| RUÍDO - ARRANJO PARA SUPRESSÃO | 345 |

## S

| Designação | Página |
|---|---|
| SEMI-EIXO TRASEIRO | 220 |
| SEPARADOR DE ÁGUA | 99 |
| SERVO-TRANSMISSÃO | 247 |
| SERVOTRANSMISSÃO | 254 |
| SILENCIADOR | 83 |
| SINCRONIZADOR | 248 |
| SIST. DE ILUMINAÇÃO - PISCA-PISCA GIRATÓRIO DE ADVERTÊNCIA | 163 |
| | 164 |
| SISTEMA DE ABSORÇÃO DE IMPACTOS | 348 |
| | 349 |
| SISTEMA DE ILUMINAÇÃO - ADVERTÊNCIA | 161 |
| SISTEMA DE ILUMINAÇÃO - FARÓIS | 133 |
| | 136 |
| | 138 |
| | 140 |
| | 142 |
| SUPORTE | 104 |
| | 106 |
| SUPORTE - ESCOVA | 166 |
| SUPORTE PARA TRANSPORTE | 590 |
| | 591 |
| SUSPENSÃO - ASSENTO | 778 |

## T

| Designação | Página |
|---|---|
| TACÔMETRO - ELÉTRICO | 703 |
| | 704 |
| | 705 |
| | 706 |
| | 781 |
| | 782 |
| TAMPA | 267 |
| | 446 |
| | 459 |
| | 462 |
| TAMPA - ACESSO À BATERIA | 316 |
| TAMPA - ADMISSÃO DE AR | 76 |
| TAMPA - CONSOLO | 727 |
| TAMPA - ENCHIMENTO (TANQUE HIDRÁULICO) | 539 |
| TAMPA - MECANISMO DAS VÁLVULAS | 25 |
| TAMPA - TANQUE DE COMBUSTÍVEL | 102 |
| TAMPA & VÁLVULA-BANCO | 371 |
| TAMPA-COLUNA | 730 |
| TAMPA CONTRA POEIRA | 347 |
| | 474 |
| TAMPA (HASTE DA VALVULA) | 266 |
| TAMPA-PAINEL TRASEIRO DO MOTOR | 728 |
| | 729 |
| TAMPA (RADIADOR) | 69 |
| | 72 |
| TAMPÃO (TUBULAÇÕES DO FILTRO DE ÓLEO DO MOTOR) | 54 |
| TANQUE DE COMBUSTÍVEL | 101 |
| | 102 |
| TANQUE DE COMBUSTÍVEL E MONTAGEM | 100 |
| TANQUE DO FREIO | 296 |
| TANQUE HIDRÁULICO | 539 |
| TAPETE | 739 |
| | 740 |
| TELA FILTRANTE | 254 |
| TELA FILTRANTE (CAIXA DE TRANSMISSÃO) | 250 |
| TOLDO | 711 |
| TOLDO - ESTRUTURA ROPS ABERTA | 712 |
| TOMADA - MAGNETICA | 218 |
| | 227 |
| TRANSMISSÃO DIRETA | 247 |


* TRADUÇÃO NÃO DISPONÍVEL NO MOMENTO DA IMPRESSÃO

# ÍNDICE


| Designação | Página |
|---|---|
| | 248 |
| TRANSMISSÃO E MONTAGEM | 245 |
| | 246 |
| TRAVA - CONTROLE MANUAL HIDRÁULICO | 524 |
| TRAVA - PEDAL DE CONTROLE HIDRÁULICO | 523 |
| TRAVA - QUARTA MARCHA | 236 |
| TRAVA - TRANSPORTE | 599 |
| | 600 |
| | 601 |
| | 602 |
| | 603 |
| TRAVA DA PERNA DO ESTABILIZADOR | 598 |
| TREM DE FORÇA | 239 |
| | 240 |
| TUBOS - ABSORÇÃO DE IMPACTOS | 487 |
| TUBOS - AQUECEDOR | 747 |
| TUBOS - AR | 80 |
| | 81 |
| | 82 |
| TUBOS - ARREFECEDOR DO TREM DE FORÇA | 59 |
| | 61 |
| TUBOS - BOMBA | 477 |
| | 479 |
| | 482 |
| | 483 |
| | 484 |
| | 485 |
| TUBOS - BRAÇO | 501 |
| | 502 |
| | 505 |
| TUBOS - BRAÇO COM EXTENSÃO | 445 |
| TUBOS - CAÇAMBA DE MÚLTIPLAS APLICAÇÕES | 466 |
| | 468 |
| | 470 |
| | 472 |
| TUBOS - CILINDRO DA CAÇAMBA | 441 |
| TUBOS - CILINDRO DE INCLINAÇÃO | 519 |
| | 521 |
| TUBOS - CILINDRO DE LEVANTAMENTO | 446 |
| | 448 |
| | 450 |
| TUBOS - CIRCUITO PILOTO | 474 |
| TUBOS - COMBUSTÍVEL | 90 |
| TUBOS - DIREÇÃO | 300 |
| TUBOS - DRENAGEM | 443 |
| | 444 |
| TUBOS - ESTABILIZADOR | 497 |
| | 499 |
| TUBOS - GIRO | 509 |
| | 511 |
| | 513 |
| | 516 |
| TUBOS - LANÇA | 440 |
| TUBOS - RETROESCAVADEIRA | 398 |
| | 400 |
| TUBOS - TRAVAMENTO DE DESLOCAMENTO LATERAL | 489 |
| | 491 |
| | 493 |
| | 495 |
| TUBOS - VÁLVULA DE CONTROLE DE CARGA | 451 |
| | 454 |
| | 458 |
| TUBOS AUXILIARES | 462 |
| | 464 |
| TUBOS AUXILIARES - RETROESCAVADEIRA | 402 |
| | 404 |
| | 405 |
| | 407 |
| | 408 |
| | 412 |
| | 416 |
| | 420 |
| | 424 |
| | 428 |
| | 432 |
| | 436 |
| TUBOS DO AQUECEDOR | 749 |
| TUBULAÇÕES - AQUECEDOR E AR CONDICIONADO | 749 |
| TURBOALIMENTADOR | 84 |


## U


| | |
|---|---|
| UNI-DENTE | 697 |


## V


| | |
|---|---|
| *VALVE GP-CHECK | 558 |
| *VALVE GP-PUMP CONTROL | 581 |
| | 582 |
| VÁLVULA - CONTROLE DE CARGA | 579 |
| VÁLVULA (ÁGUA) | 698 |
| | 741 |
| VÁLVULA AUXILIAR | 544 |
| | 545 |
| | 546 |
| VÁLVULA DE ALÍVIO | 254 |
| | 260 |
| | 305 |
| | 559 |


* TRADUÇÃO NÃO DISPONÍVEL NO MOMENTO DA IMPRESSÃO

# ÍNDICE


| Designação | Página |
|---|---|
| | 571 |
| | 575 |
| VÁLVULA DE ALÍVIO (CONVERSOR) | 248 |
| VÁLVULA DE ALÍVIO (PRESSAO DA EMBREAGEM) | 248 |
| VÁLVULA DE ALÍVIO (RESPIRO DE AR) | 237 |
| VÁLVULA DE CONTROLE | 559 |
| | 561 |
| | 563 |
| | 565 |
| | 567 |
| | 569 |
| | 571 |
| | 573 |
| | 575 |
| | 577 |
| VÁLVULA DE CONTROLE E MONTAGEM | 541 |
| VÁLVULA DE GÁS | 346 |
| VÁLVULA DE PARADA | 58 |
| | 390 |
| VÁLVULA DE PNEU | 266 |
| | 267 |
| VÁLVULA DE PRIORIDADE | 305 |
| VÁLVULA DO CONECTOR | 347 |
| VÁLVULA SOLENÓIDE | 261 |
| | 262 |
| | 263 |
| | 264 |
| | 265 |
| | 584 |
| | 585 |
| VÁLVULA SOLENÓIDE (12 V) (CONTROLE DA RAZÃO DE AR E COMBUSTÍVEL) | 92 |
| VELA DE AQUECIMENTO; VELA INCANDESCENTE | 113 |
| VENTILADOR | 700 |
| | 743 |
| VENTILADOR DE SUCÇÃO | 56 |
| | 57 |
| VIDRO DA PORTA | 793 |
| | 795 |
| VIRABREQUIM | 27 |
| VOLANTE | 304 |
| VOLANTE DA DIREÇÃO | 298 |
| VOLANTE DO MOTOR | 35 |


* TRADUÇÃO NÃO DISPONÍVEL NO MOMENTO DA IMPRESSÃO

# STICHWORTVERZEICHNIS


| Bezeichnung | Seite |
|---|---|
| **A** | |
| ABDECKGLAS | 117, 120, 122, 124, 126 |
| ABDECKGLAS (ARBEITSSCHEINWERFER) | 118, 119 |
| ABDECKGLAS (BREMSLICHT/RICHTUNGS-BLINKER) | 130 |
| ABDECKGLAS (DURCHSICHTIG) | 138 |
| ABDECKGLAS (DURCHSICHTIG) (ARBEITSLEUCHTE) | 136 |
| ABDECKGLAS (GELB) | 120, 122, 124, 126, 131, 132 |
| ABLASSLEITUNGEN | 443, 444 |
| ABSPERRVENTIL | 58, 390 |
| ACHSBOLZEN | 218 |
| ACHSENANBAUSATZ | 237 |
| ACHSGEHÄUSEFLANSCH | 234, 235 |
| ANSCHLUSS | 370 |
| ANSCHLUSS - HEIZUNG U. KLIMAANLAGE | 58 |
| ANTRIEB - BAGGERLADER | 230 |
| ANTRIEBS- UND LENKACHSE | 218 |
| ANTRIEBSWELLE | 241, 242, 243, 244 |
| ANTRIEBSWELLENVERKLEIDUNG | 331 |
| ANZEIGE | 187 |
| ARBEITSLEUCHTEN | 117, 118, 119, 133, 136, 138, 140, 142 |
| ARMLEHNE | 702 |
| AUFKLEBER | 799, 800 |
| AUFKLEBER - ALLRADLENKUNG | 806 |
| AUFKLEBER - ANZEIGE | 185, 617, 618, 620 |
| | 806 |
| AUFKLEBER - ANZEIGE (SCHAUFEL) | 616, 617 |
| AUFKLEBER - ANZEIGE (SCHAUFELHÖHE) (SCHAUFEL) | 615 |
| AUFKLEBER - ANZEIGE (416D) | 183, 806 |
| AUFKLEBER - CAT | 338 |
| AUFKLEBER - FESTZURREN | 804 |
| AUFKLEBER - HEBE- U. VERZURRPUNKT | 804, 807 |
| AUFKLEBER - HEBEN | 804 |
| AUFKLEBER (BULK) (0,095M) | 806 |
| AUFKLEBER (CATERPILLAR) | 705, 706, 800 |
| AUFKLEBER (INST) | 806 |
| AUFKLEBER (INST) (KOMBISCHAUFELSTEUE-RUNG) | 392 |
| AUFKLEBER (KOMBISCHAUFEL) | 394, 806 |
| AUFKLEBER (KOMBISCHAUFEL) (MECHANI-SCHE SCHAUFELSTEUERUNG) | 392 |
| AUFKLEBER (KONTROLLE) (KLIMAANLA-GE) | 698, 741 |
| AUFKLEBER (KONTROLLE) (KLIMAANLA-GE) | 806 |
| AUFKLEBER (LUFTUMLAUF) | 700 |
| AUFKLEBER (MASCHINENSICHERHEITSSY-STEM) | 115 |
| AUFKLEBER (NAMENSSCHILD) | 346 |
| AUFKLEBER (SCHAUFELSTEUERUNG) | 354, 805, 806 |
| AUFKLEBER (SCHWINGUNGSDÄMPFUNG) | 349, 397 |
| AUFKLEBER (SISHF/AUSLEGERSPERRVOR-RICHTUNG) | 805 |
| AUFKLEBER (STANDARD-KREUZMUSTER) | 805 |
| AUFKLEBER (START) | 115 |
| AUFKLEBER (STARTSCHALTER) | 758, 760, 805 |
| AUFKLEBER (STARTSCHLÜSSELSCHAL-TER) | 115 |
| AUFKLEBER (STEUERPLATTE) | 805 |
| AUFKLEBER (STÜTZENSTEUERUNG) | 538 |
| AUFKLEBER (VARIABLE GESCHWINDIG-KEIT) | 86, 805 |


* ÜBERSETZUNG ZUM ZEITPUNKT DER DRUCKLEGUNG NICHT VORHANDEN

# STICHWORTVERZEICHNIS


| Bezeichnung | Seite |
|---|---|
| AUFKLEBER (ZENTRALE DREHVORRICHTUNG/AUSLEGERSPERRVORRICHTUNG) | 805 |
| AUFKLEBER (20 KM/H) | 18<br>19 |
| AUFKLEBER (278 CM) | 338 |
| AUFKLEBER (400 CM) | 703<br>704<br>705<br>706 |
| AUSLEGER | 588 |
| AUSLEGERLEITUNGEN | 440 |
| AUSLEGERZYLINDER | 376 |
| AUSPUFFROHRVERLÄNGERUNG | 77 |

## B

| | |
|---|---|
| BATTERIE | 104<br>106<br>108<br>110 |
| BATTERIE (12 V) | 104<br>106<br>108<br>110 |
| BATTERIEDECKEL | 316 |
| BATTERIEKASTEN | 306<br>307<br>308<br>309<br>310 |
| BEFESTIGUNGSTEILE | 584 |
| BELEUCHTUNGSANLAGE (RUNDUMKENNLEUCHTE) | 132 |
| BELEUCHTUNGSANLAGE (STRASSENAUSRÜSTUNG) | 144<br>146<br>149<br>152<br>155<br>158 |
| BELEUCHTUNGSANLAGE (12 V) | 115 |
| BLINKER | 198 |
| BLITZSCHUTZ | 332<br>333 |
| BODENBLECH | 320 |
| *BOOM GP | 589 |
| BREMS- UND RÜCKLEUCHTE | 129<br>130 |
| BREMSGESTÄNGE | 292 |
| BREMSSATTEL-EINBAUSATZ | 289 |
| BREMSTANK | 296 |
| BUCHSE | 803 |
| BUCHSE - KABELSPLEISSUNG | 713 |
| *BUCKET AR-MULTIPURPOSE | 620 |
| BÜRSTENHALTER | 166 |

## D

| | |
|---|---|
| DICHTUNGSSATZ | 114 |
| DICHTUNGSSATZ (LENKUNGSZUMESSPUMPE) | 303 |
| DIFFERENTIAL | 229 |
| DIFFERENTIAL UND TELLERRAD | 227 |
| DIFFERENTIALSPERRENGESTÄNGE | 225 |
| DIFFERENZIALGEHÄUSE | 227 |
| DREHSTROMGENERATOR | 103 |
| DREHZAHLMESSER, ELEKTR. | 704<br>705<br>706<br>781<br>782 |
| DREHZAHLMESSER, ELEKTR. | 703 |
| DREHZAHLREGLER - STEUERHEBEL | 746 |
| DRUCKBEGRENZUNGSVENTIL (ENTLÜFTUNGSVORRICHTUNG) | 237 |
| DRUCKKNOPFSCHALTER | 359 |
| DRUCKKNOPFSCHALTER (GETRIEBE NEUTRAL) | 226 |
| DRUCKLUFTLEITUNGEN | 80<br>81<br>82 |
| DRUCKSCHALTER | 169<br>206<br>208<br>210<br>212 |
| DRUCKSCHALTER (HOCH - NIEDRIG) | 173 |
| DRUCKSPEICHER, HYDRAULISCHE SCHWINGUNGSDÄMPFUNG | 346 |
| DRUCKSPEICHERWARTUNGSSATZ | 346 |

## E

| | |
|---|---|
| EINFÜLLKAPPE (HYDRAULIKTANK) | 539 |
| EINSTELLER-EINBAUSATZ | 702 |
| ELEKTRONISCHER SCHLÜSSEL (SICHERHEIT) | 115 |
| ENDSCHALTER | 292 |
| ENTLÜFTER | 256 |
| ENTLÜFTER (ACHSE) | 218 |
| ENTLÜFTER (GETRIEBE) | 249 |

## F

| | |
|---|---|
| FAHRERHAUS | 703 |


* ÜBERSETZUNG ZUM ZEITPUNKT DER DRUCKLEGUNG NICHT VORHANDEN

# STICHWORTVERZEICHNIS


| Bezeichnung | Seite |
|---|---|
| | 704 |
| | 707 |
| | 709 |
| FAHRERHAUS - HALTETEILE | 783 |
| FAHRERHAUS M. OFFENEM ÜBERROLL-SCHUTZ | 712 |
| FAHRERHAUS MIT ÜBERROLLSCHUTZ | 705 |
| | 706 |
| FAHRERHAUS, SONNENBLENDE | 784 |
| FAHRERHAUSBELEUCHTUNG | 776 |
| FAHRERHAUSFENSTER | 787 |
| | 789 |
| | 791 |
| FAHRERHAUSHEIZUNG | 743 |
| FAHRERHAUSHEIZUNG U. BEFESTIGUNGS-TEILE | 741 |
| FAHRERHAUSTÜR (LINKS) | 731 |
| FAHRERHAUSTÜR (RECHTS) | 733 |
| FAHRERHAUSVERDRAHTUNG | 178 |
| | 180 |
| | 181 |
| FAHRERPLATTFORMVERDRAHTUNG | 196 |
| | 198 |
| FAHRERSITZ | 763 |
| | 765 |
| | 767 |
| FAHRERSITZFEDERUNG | 778 |
| FAHRWERK | 15 |
| FEDER (ENTLÜFTERSCHLAUCH) | 25 |
| FESTSTELLBREMSE | 289 |
| FESTSTELLBREMSGESTÄNGE | 290 |
| | 291 |
| FEUERWANDABDECKUNG | 728 |
| | 729 |
| FILTER | 559 |
| | 561 |
| | 563 |
| | 565 |
| | 567 |
| | 569 |
| | 571 |
| | 573 |
| | 575 |
| | 577 |
| | 698 |
| | 741 |
| FILTER (HYDRAULIKTANKENTLÜFTER) | 539 |
| FILTER (KRAFTSTOFF) | 98 |
| FILTERSOCKEL U. MOTORÖLKÜHLER | 54 |
| FRONTSTEUERPULT | 717 |
| | 718 |
| FRONTSTOSSSTANGE | 311 |
| FUSSMATTE | 739 |
| | 740 |

## G

| | |
|---|---|
| GABEL | 685 |
| GABELBEFESTIGUNG | 693 |
| GASPEDAL | 761 |
| GASVENTIL | 346 |
| GEGENGEWICHT | 312 |
| | 313 |
| | 314 |
| | 315 |
| GEHÄUSE - AUSFAHRBARER STIEL | 592 |
| GETRIEBE U. BEFESTIGUNG | 245 |
| | 246 |
| GETRIEBEÖLFÜLLSTUTZEN | 232 |
| | 233 |
| GETRIEBEPUMPE | 250 |
| | 254 |
| GETRIEBESTEUERUNG | 226 |
| GETRIEBESYNCHRONISIERSATZ | 248 |
| GLEITRAHMEN | 324 |
| GLEITSCHIENENBLOCK-EINBAUSATZ | 770 |
| | 772 |
| | 774 |
| GLÜHKERZE | 113 |
| GRUNDAUSFÜHRUNG | 16 |

## H

| | |
|---|---|
| HALTERUNG | 104 |
| | 106 |
| HANDSTEUERHEBEL | 295 |
| HECKBAGGER | 10 |
| | 13 |
| HECKBAGGER-TELESKOPSTIEL | 1 |
| | 2 |
| | 3 |
| | 4 |
| | 5 |
| | 6 |
| | 7 |
| | 8 |
| HECKBAGGERLÖFFEL | 625 |
| | 626 |
| | 627 |
| | 628 |
| | 629 |
| | 630 |
| | 631 |
| | 632 |
| | 633 |
| | 634 |


* ÜBERSETZUNG ZUM ZEITPUNKT DER DRUCKLEGUNG NICHT VORHANDEN

# STICHWORTVERZEICHNIS


| Bezeichnung | Seite |
|---|---|
| | 635 |
| | 636 |
| | 637 |
| | 638 |
| | 639 |
| | 640 |
| | 641 |
| | 642 |
| | 643 |
| | 644 |
| | 645 |
| | 646 |
| | 647 |
| | 648 |
| | 649 |
| | 650 |
| | 651 |
| | 652 |
| | 653 |
| | 654 |
| | 655 |
| | 656 |
| | 657 |
| | 658 |
| | 659 |
| | 660 |
| | 661 |
| | 662 |
| | 663 |
| | 664 |
| | 665 |
| HECKBAGGERLÖFFELGESTÄNGE | 594 |
| | 596 |
| HECKBAGGERLÖFFELZYLINDER | 372 |
| | 374 |
| HEIZUNGS- U. KLIMAANLAGENLEITUNGEN | 749 |
| HEIZUNGSLEITUNGEN | 747 |
| | 749 |
| HEIZUNGSVERDRAHTUNG | 193 |
| HINTERACHSE | 220 |
| HUBARM | 586 |
| HUBZYLINDER | 381 |
| HUBZYLINDERLEITUNGEN | 446 |
| | 448 |
| | 450 |
| HYDRAULIKANSCHLUSSSTÜCK | 678 |
| HYDRAULIKFUSSSTEUERUNGSSPERRE | 523 |
| HYDRAULIKHANDSTEUERUNG | 352 |
| | 354 |
| | 356 |
| | 358 |
| | 359 |
| | 361 |
| | 362 |
| | 363 |
| | 364 |
| HYDRAULIKÖLABLASS | 390 |
| HYDRAULIKPEDALSTEUERUNG | 365 |
| | 367 |
| HYDRAULIKPUMPE UND LEITUNGEN | 477 |
| | 479 |
| | 482 |
| | 483 |
| | 484 |
| | 485 |
| HYDRAULIKPUMPENBEFESTIGUNG | 528 |
| HYDRAULIKSPERRE (HANDBEDIENUNG) | 524 |
| HYDRAULIKSYSTEM | 391 |
| | 392 |
| | 393 |
| | 394 |
| | 395 |
| | 396 |
| | 397 |
| HYDRAULIKTANK | 539 |
| HYDRAULISCHE SCHWINGUNGSDÄMPFUNG | 348 |
| | 349 |
| HYDRAULISCHE SCHWINGUNGSDÄMPFUNG - EINBAUSATZ | 397 |
| **I** | |
| IDENTIFIKATIONSSCHILD | 17 |
| | 18 |
| | 19 |
| IDENTIFIZIERUNGS-AUFKLEBER (SICHERUNGSTAFEL) | 230 |
| IDENTIFIZIERUNGS-AUFKLEBER (SICHERUNGSTAFEL) | 806 |
| INASTRUMENTENTAFEL-EINBAUSATZ | 756 |
| | 757 |
| | 758 |
| INSTRUKTIONS-AUFKLEBER | 112 |
| | 806 |
| INSTRUKTIONS-AUFKLEBER (E-STIEL) | 365 |
| INSTRUKTIONS-AUFKLEBER (*EXTENDABLE STICK) | 806 |
| INSTRUKTIONS-AUFKLEBER (NICHT BETRETEN) | 806 |
| INSTRUKTIONS-AUFKLEBER (RÜCKFLUSS) | 408 |
| | 806 |
| INSTRUKTIONS-AUFKLEBER (RÜCKFLUSS) | 412 |
| | 416 |
| | 420 |
| | 424 |


* ÜBERSETZUNG ZUM ZEITPUNKT DER DRUCKLEGUNG NICHT VORHANDEN

# STICHWORTVERZEICHNIS


| Bezeichnung | Seite |
|---|---|
| | 428 |
| | 432 |
| | 436 |
| INSTRUKTIONS-AUFKLEBER (SCHAUFEL-STEUERUNG) | 391 |
| | 392 |
| | 393 |
| | 394 |
| INSTRUKTIONS-AUFKLEBER (SCHAUFEL-STEUERUNG) | 807 |
| INSTRUMENTENTAFEL | 760 |

## K

| Bezeichnung | Seite |
|---|---|
| KÄLTEMITTELKOMPRESSOR | 714 |
| | 715 |
| KÄLTEMITTELKONDENSATOR U. BEFESTIGUNGSTEILE | 716 |
| KAPPE | 267 |
| | 446 |
| | 459 |
| | 462 |
| KAPPE (KÜHLER) | 69 |
| | 72 |
| KAPPE (VENTILSCHAFT) | 266 |
| KEILRIEMEN (KLIMAANLAGENKOMPRES-SOR) | 715 |
| KEILRIEMENSATZ (EINSCHL. 2 RIEMEN) | 711 |
| KEILRIEMENSATZ (EINSCHL. 2 RIEMEN) | 703 |
| | 704 |
| | 705 |
| | 706 |
| KIPPSCHALTER (HEIZGEBLÄSEGESCHWIN-GIGKEITSSTUFE) | 173 |
| KIPPSCHALTER (HEIZGEBLÄSEGESCHWIN-GIGKEITSSTUFE) | 193 |
| KIPPSCHALTER (HINTERER ARBEITSSCHEIN-WERFER) | 142 |
| KIPPSCHALTER (SCHWINGUNGSDÄMP-FUNG) | 206 |
| | 210 |
| | 212 |
| KIPPSCHALTER (SCHWINGUNGSDÄMPFUNG) (STANDARDSCHALTUNG) | 349 |
| KIPPSCHALTER (VORDERE ARBEITSSCHEIN-WERFER) | 142 |
| KIPPSCHALTER (WARNSCHALTER) | 183 |
| KIPPZYLINDER | 388 |
| KLIMAANLAGE | 700 |
| KLIMAANLAGE UND AUFHÄNGUNG | 698 |
| KLIMAANLAGENDRUCKSPEICHER | 749 |
| KLIMAANLAGENVERDRAHTUNG | 173 |
| KOLBENPUMPE | 533 |
| KOLBENPUMPENUMLAUFSATZ | 536 |
| KOMBISCHAUFEL | 615 |
| | 616 |
| | 617 |
| | 618 |
| | 619 |
| | 620 |
| | 666 |
| | 667 |
| | 668 |
| | 669 |
| | 670 |
| | 672 |
| | 674 |
| | 675 |
| KOMBISCHAUFELLEITUNGEN | 466 |
| | 468 |
| | 470 |
| | 472 |
| KOMBISCHAUFELZYLINDER | 382 |
| KONSOLENVERDRAHTUNG | 183 |
| | 185 |
| | 187 |
| KONTAKT-EINBAUSATZ (STARTERMOTOR) | 166 |
| KRAFTSTOFF-ENTLÜFTUNGSPUMPE | 98 |
| KRAFTSTOFFEINSPRITZPUMPE | 92 |
| | 93 |
| | 96 |
| KRAFTSTOFFFILTEREINSATZ | 88 |
| KRAFTSTOFFILTER | 88 |
| KRAFTSTOFFLEITUNGEN | 90 |
| KRAFTSTOFFTANK | 101 |
| | 102 |
| KRAFTSTOFFTANK U. BEFESTIGUNG | 100 |
| KRAFTSTOFFTANKKAPPE | 102 |
| KRAFTÜBERTRAGUNG | 239 |
| | 240 |
| KREUZGELENK-EINBAUSATZ | 218 |
| KREUZGELENKLAGER-EINBAUSATZ | 241 |
| | 242 |
| | 243 |
| | 244 |
| KÜHLER UND HYDRAULIKÖLKÜHLER | 67 |
| | 69 |
| | 70 |
| | 72 |
| KÜHLER UND LÜFTER | 65 |
| | 66 |
| KÜHLWASSERANSCHLUSS | 53 |
| KÜHLWASSERPUMPE | 63 |
| KUPPLUNGSANTRIEB, ELAST. | 231 |
| KURBELWELLE | 27 |
| KURBELWELLEN-RIEMENSCHEIBE | 49 |


* ÜBERSETZUNG ZUM ZEITPUNKT DER DRUCKLEGUNG NICHT VORHANDEN

# STICHWORTVERZEICHNIS


| Bezeichnung | Seite |
|---|---|
| **L** | |
| LADERRAHMEN | 322<br>323 |
| LADERZUSATZLEITUNGEN | 462<br>464 |
| LADESCHAUFEL | 597 |
| LAGERSATZ | 220 |
| LASTSCHALTGETRIEBE | 247<br>254 |
| LASTSTEUERVENTIL | 579 |
| LASTSTEUERVENTILLEITUNGEN | 451<br>454<br>458 |
| LAUFBAND UND ANTRIEB (RUNDUM-KENNLEUCHTE) | 131<br>132 |
| LAUFROLLENSCHALTER (RÜCKFÜHRUNG IN DIE GRABSTELLUNG) | 214 |
| LAUTSPRECHER | 776 |
| LEITUNGS-BEFESTIGUNGSTEILE | 529<br>530<br>531<br>532 |
| LEITUNGSVERKLEIDUNG | 334<br>335 |
| LENKBETÄTIGUNG | 297<br>298 |
| LENKKNOPF | 299 |
| LENKÖLLEITUNGEN | 300 |
| LENKRAD | 298<br>304 |
| LENKVERDRAHTUNG | 217 |
| LEUCHTE (12 V) | 128<br>185<br>781<br>782 |
| LEUCHTE (12 V) (KRAFTSTOFFSTAND) | 187 |
| LEUCHTE (12 V) (KÜHLMITTELTEMPERATUR-ANZEIGE) | 187 |
| LEUCHTE (12 V) (MINIATURLEUCHTE) | 124<br>126<br>753 |
| LEUCHTE (12 V) (ÖLTEMPERATURWAND-LER) | 187 |
| LEUCHTE (12 V) (SPANNUNGSMESSER) | 187 |
| LEUCHTE (12 V) (21 W) | 124<br>126 |
| LEUCHTE (12 V, 21 W) | 120<br>122 |
| LEUCHTE (12 V/ 21W) (FAHRTRICHTUNGSAN-ZEIGER) | 130 |
| LEUCHTE (12 V/ 21/5 W) (ABSTELLEN) | 130 |
| LEUCHTE (12 V, 4 W) | 120<br>122 |
| LEUCHTE (12 V, 55 W) | 119<br>131<br>132 |
| LEUCHTE (12 V, 55 W) | 118 |
| LEUCHTE (12 V, 55 W) | 136 |
| LEUCHTE (12 V, 55 W) | 140<br>142 |
| LEUCHTE (12 V, 55 W) (ARBEITSSCHEINWER-FER) | 136 |
| LEUCHTE (12 V/21 W) | 117 |
| LEUCHTE (12 V)(55 W) | 133 |
| LEUCHTE (12 V)(55 W) | 133 |
| LEUCHTE (12 V)(55 W) | 133 |
| LEUCHTE (12V, 10W) | 776 |
| LEUCHTE (12V/55W) | 138 |
| LEUCHTE (12V/55W) | 138 |
| *LINES GP-RETURN | 486 |
| LITERATURABLAGE | 713 |
| LÖFFELSTIEL | 613 |
| LÖFFELZYLINDERLEITUNGEN | 441 |
| LUFTEINLASSDECKEL | 76 |
| LÜFTER | 700<br>743 |
| LÜFTERANTRIEB | 34 |
| LUFTFILTER | 743 |
| LUFTFILTER (FAHRERHAUSLUFT) | 700 |
| LUFTFILTERWARTUNGSANZEIGE | 78<br>79 |
| LUFTKANAL | 735<br>737<br>738 |
| LUFTREINIGER | 73<br>75 |
| **M** | |
| MAGNETISCHE SCHRAUBE | 218<br>227 |
| MAGNETSTOPFEN | 222 |
| MAGNETVENTIL | 261<br>262<br>263<br>264<br>265<br>584<br>585 |
| MAGNETVENTIL (12 V) (LUFT/KRAFTSTOFF-VERHÄLTNIS-STEUERUNG) | 92 |
| MANSCHETTE | 391<br>393 |
| MECHANISCHES GETRIEBE | 247 |
| MOTOR- UND GETRIEBEAUFLAGER | 41 |


* ÜBERSETZUNG ZUM ZEITPUNKT DER DRUCKLEGUNG NICHT VORHANDEN

# STICHWORTVERZEICHNIS


| Bezeichnung | Seite |
|---|---|
| | 42 |
| MOTORAUFLAGER | 40 |
| MOTORAUSFÜHRUNG | 20 |
| | 21 |
| | 22 |
| | 23 |
| MOTORBLOCK | 29 |
| | 31 |
| MOTORHAUBE | 338 |
| MOTORHAUBE UND VERKLEIDUNG | 336 |
| MOTORHUBÖSE | 39 |
| MOTORÖLEINFÜLLSTUTZEN | 51 |
| MOTORÖLKÜHLER | 54 |
| MOTORÖLKÜHLER UND FILTERSOCKEL | 54 |
| MOTORSTOPFEN | 47 |
| | 48 |
| MOTORVERDRAHTUNG | 189 |

## N

| | |
|---|---|
| NEIGEZYLINDERLEITUNGEN | 519 |
| | 521 |
| NOCKENSATZ (NACH LINKS) | 289 |
| NOCKENWELLE | 24 |

## O

| | |
|---|---|
| O-RING-DICHTUNG | 256 |
| | 445 |
| O-RING-DICHTUNG (KÜHLWASSERTHERMO-STAT) | 53 |
| ÖLFILTER | 51 |
| ÖLFILTER (GETRIEBE) | 247 |
| ÖLFILTER (HYDRAULISCH) (SCHWER ENTFLAMMBAR) | 396 |
| | 397 |
| ÖLFILTER (REINIGUNG/HOCHLEISTUNG) | 396 |
| | 397 |
| ÖLKÜHLERLEITUNGEN (KRAFTÜBERTRA-GUNG) | 59 |
| | 61 |
| ÖLWANNE | 43 |
| ÖLWANNEN-ABLASSCHRAUBE | 43 |

## P

| | |
|---|---|
| PALETTENGABEL | 686 |
| PANETENTRÄGERSATZ | 238 |
| PFOSTENABDECKUNG | 730 |
| PLEUELSTANGE UND KOLBEN | 45 |
| POLSTEREINBAUSATZ | 702 |

## R

| | |
|---|---|
| RAD UND REIFEN | 267 |
| | 268 |
| | 269 |
| | 270 |
| | 271 |
| | 272 |
| | 273 |
| | 274 |
| | 275 |
| | 276 |
| | 277 |
| | 278 |
| | 279 |
| | 280 |
| | 281 |
| | 282 |
| | 283 |
| | 284 |
| | 285 |
| | 286 |
| | 287 |
| | 288 |
| REFLEKTOR | 146 |
| | 149 |
| | 152 |
| | 155 |
| | 158 |
| | 344 |
| REGLER- UND GASPEDALGESTÄNGE | 86 |
| REIFENVENTIL | 266 |
| | 267 |
| RELAIS (12 V) | 133 |
| | 140 |
| | 142 |
| | 173 |
| | 176 |
| | 189 |
| | 193 |
| | 206 |
| | 208 |
| | 217 |
| RELAIS (12 V) (ABSENKEN BEI AUSGEFALLENEM MOTOR) | 181 |
| RELAIS (12 V) (ABSENKEN BEI FUNKTIONUNFÄHIGEM MOTOR, SCHWINGUNGSDÄMPFUNG) | 210 |
| | 212 |
| RELAIS (12 V) (BELEUCHTUNG) | 136 |
| | 138 |
| RELAIS (12 V) (HEIZUNG U. KLIMAANLAGE) | 193 |
| RELAIS (12 V) (HOHE GESCHWINDIGKEIT) | 173 |
| RELAIS (12 V) (SEITENSTEUERUNG) | 178 |


* ÜBERSETZUNG ZUM ZEITPUNKT DER DRUCKLEGUNG NICHT VORHANDEN

# STICHWORTVERZEICHNIS


| Bezeichnung | Seite |
|---|---|
| RELAIS (12 V) (SICHERHEIT MOTOR) | 115 |
| RELAIS (12 V) (STANDARD-/ZUSATZARBEITS-SCHEINWERFER) | 136 |
| | 138 |
| REPARATURSATZ | 797 |
| ROLLENLAGER-EINBAUSATZ | 238 |
| RÜCKFAHRWARNHORN | 171 |
| RÜCKSPIEGEL | 751 |
| | 752 |
| RÜCKSTRAHLER | 809 |
| RUNDUM-KENNLEUCHTE | 131 |
| | 132 |
| | 163 |
| | 164 |
| **S** | |
| SAUGLÜFTER | 56 |
| | 57 |
| SCHALLDÄMPFENDE VERKLEIDUNG | 341 |
| SCHALLDÄMPFER | 83 |
| SCHALLDÄMPFUNG | 345 |
| | 776 |
| SCHALTAUTOMATIKVERDRAHTUNG | 176 |
| SCHALTER | 391 |
| | 392 |
| | 393 |
| | 394 |
| SCHALTER (FAHRTRICHTUNGSANZEIGER) | 180 |
| SCHALTER (HEIZUNG) | 193 |
| SCHALTER (HUPE) | 183 |
| SCHALTER (HYDRAULIKSPERRE) | 391 |
| | 393 |
| SCHALTER (LADERVENTIL) | 394 |
| SCHALTER (LUFTEINLASS) | 79 |
| SCHALTER (NEUTRALSPERRE) | 183 |
| SCHALTER (RASTE) | 392 |
| SCHALTER (SCHWINGUNGSDÄMPFUNG) | 208 |
| SCHALTER (SCHWINGUNGSDÄMPFUNG - STANDARD) | 397 |
| SCHALTER (SPRITZVERSTELLUNG) | 93 |
| SCHALTER (40 GRAD) (MOTORKÜHLMITTEL-TEMPERATUR) | 96 |
| SCHAUFELANSCHLAG | 695 |
| | 696 |
| SCHAUFELAUFHÄNGUNG | 689 |
| | 690 |
| | 691 |
| | 692 |
| SCHAUFELSCHUTZ | 687 |
| | 688 |
| SCHAUFELSCHUTZ (VORN) | 18 |
| SCHAUFELSCHUTZ (VORN) | 19 |
| SCHAUFELTRANSPORTAUSFÜHRUNG | 694 |
| SCHEIBENWASCHANLAGE | 785 |
| SCHEIBENWISCHER | 797 |
| SCHEIBENWISCHERBLATT | 797 |
| SCHEIBENWISCHERMOTOR | 755 |
| SCHEINWERFER U. RICHTUNGSLEUCHTE | 120 |
| | 122 |
| | 124 |
| | 126 |
| SCHEINWERFER (12 V) | 124 |
| | 126 |
| SCHEINWERFER (12 V, 60/55 W) | 120 |
| | 122 |
| SCHILD UND AUFKLEBER | 804 |
| | 805 |
| SCHLAUCHLEITUNG (ENTLÜFTER) | 25 |
| SCHLÜSSEL | 803 |
| SCHMIERNIPPEL | 586 |
| | 588 |
| | 596 |
| | 604 |
| | 668 |
| | 674 |
| | 675 |
| SCHMIERNIPPEL (1/8-27-GEWINDE) | 324 |
| | 527 |
| | 586 |
| | 609 |
| | 611 |
| | 613 |
| SCHMIERNIPPEL (1/8-27-GEWINDE) | 666 |
| | 667 |
| | 669 |
| | 689 |
| SCHMIERPUMPE | 52 |
| SCHNEIDMESSER | 683 |
| | 684 |
| SCHNELLWECHSELEINRICHTUNG | 677 |
| | 678 |
| | 679 |
| | 680 |
| | 681 |
| | 682 |
| SCHRAUBE (MOTORÖLFILTERLEITUNGEN) | 54 |
| SCHUTZBLECHE, HINTEN | 319 |
| SCHUTZBLECHE, VORNE | 317 |
| | 318 |
| SCHWENKLEITUNGEN | 509 |
| | 511 |
| | 513 |
| | 516 |
| SCHWENKRAHMEN | 326 |
| | 329 |


* ÜBERSETZUNG ZUM ZEITPUNKT DER DRUCKLEGUNG NICHT VORHANDEN

# STICHWORTVERZEICHNIS


| Bezeichnung | Seite |
|---|---|
| SCHWENKZYLINDER | 386 |
| | 387 |
| SCHWINGSITZ | 770 |
| | 772 |
| | 774 |
| | 775 |
| SCHWINGUNGSDÄMPFUNGSLEITUNGEN | 487 |
| SCHWINGUNGSDÄMPFUNGSVERDRAHTUNG | 206 |
| | 208 |
| | 210 |
| | 212 |
| SCHWUNGRAD | 35 |
| SCHWUNGRADGEHÄUSE | 36 |
| SEITENANTRIEB - PLANETENGETRIEBE | 238 |
| SEITENKONSOLE | 721 |
| | 722 |
| | 723 |
| | 724 |
| | 725 |
| | 726 |
| SEITENSCHUBSPERRLEITUNGEN | 489 |
| | 491 |
| | 493 |
| | 495 |
| SEITENSTÜTZEN | 538 |
| | 606 |
| | 607 |
| | 608 |
| SEITENSTÜTZENALARMVERDRAHTUNG | 215 |
| SEITENSTÜTZENFUSSSPERRE | 598 |
| SEITENSTÜTZENLEITUNGEN | 497 |
| | 499 |
| SEITENSTÜTZENPLATTEN | 605 |
| SEITENSTÜTZENZYLINDER | 384 |
| SENSORANSCHLUSSSATZ (12 STIFTE) | 183 |
| SENSORANSCHLUSSSATZ (2POLIG) | 115 |
| | 133 |
| | 138 |
| | 144 |
| | 173 |
| | 181 |
| | 193 |
| | 198 |
| | 203 |
| | 210 |
| | 212 |
| | 215 |
| | 261 |
| | 291 |
| SENSORANSCHLUSSSATZ (2POLIG) | 700 |
| SENSORANSCHLUSSSATZ (3POLIG) | 112 |
| | 144 |
| | 178 |
| | 181 |
| SENSORANSCHLUSSSATZ (4 POLIG) | 138 |
| | 181 |
| SENSORANSCHLUSSSATZ (4 POLIG) | 133 |
| | 178 |
| | 203 |
| | 215 |
| SENSORANSCHLUSSSATZ (4 STIFTE) | 136 |
| | 210 |
| | 212 |
| SENSORANSCHLUSSSATZ (6 STIFTE) | 210 |
| | 212 |
| SENSORANSCHLUSSSATZ (6POLIG) | 133 |
| | 138 |
| | 178 |
| | 181 |
| | 203 |
| SENSORANSCHLUSSSATZ (6POLIG) | 146 |
| | 149 |
| | 152 |
| SENSORANSCHLUSSSATZ (8 STIFTE) | 183 |
| SENSORANSCHLUSSSATZ (8POLIG) | 178 |
| | 709 |
| SENSORVERDRAHTUNG | 214 |
| SICHERHEITSEINBAUSATZ | 115 |
| SICHERHEITSEINBAUSATZ (MASCHINENSICHERHEIT) | 115 |
| SICHERHEITSGURT | 762 |
| SICHERUNG (10 A) | 131 |
| | 132 |
| | 133 |
| | 138 |
| | 142 |
| | 173 |
| | 181 |
| | 202 |
| | 206 |
| | 208 |
| | 210 |
| | 212 |
| SICHERUNG (15 A) | 133 |
| | 136 |
| | 138 |
| | 140 |
| | 142 |
| SICHERUNG (20 A) | 178 |
| SICHERUNG (5 A) | 178 |
| | 217 |
| SIEB | 254 |
| SIEB (GETRIEBEGEHÄUSE) | 250 |
| SONNENBLENDE | 784 |
| STANDARDHECKBAGGERSTIEL | 9 |


* ÜBERSETZUNG ZUM ZEITPUNKT DER DRUCKLEGUNG NICHT VORHANDEN

# STICHWORTVERZEICHNIS


| Bezeichnung | Seite |
|---|---|
| | 11 |
| | 12 |
| | 14 |
| STARTERMOTOR | 166 |
| | 168 |
| STARTSCHLÜSSELSCHALTER | 760 |
| STAUBKAPPE | 347 |
| | 474 |
| STECKDOSEN - EINBAUSATZ (12 STIFTE) | 176 |
| STECKDOSEN - EINBAUSATZ (12POLIG) | 754 |
| STECKDOSEN - EINBAUSATZ (2POLIG) | 144 |
| | 171 |
| | 181 |
| | 196 |
| | 203 |
| | 215 |
| | 217 |
| | 226 |
| | 256 |
| | 262 |
| | 263 |
| | 264 |
| | 265 |
| | 359 |
| STECKDOSEN - EINBAUSATZ (2POLIG) | 567 |
| | 569 |
| | 571 |
| | 584 |
| | 585 |
| STECKDOSEN - EINBAUSATZ (3 STIFTE) | 391 |
| STECKDOSEN - EINBAUSATZ (3 STIFTE) | 392 |
| STECKDOSEN - EINBAUSATZ (3POLIG) | 144 |
| | 165 |
| | 203 |
| | 214 |
| | 263 |
| | 264 |
| | 265 |
| STECKDOSEN - EINBAUSATZ (4 POLIG) | 133 |
| | 138 |
| STECKDOSEN - EINBAUSATZ (4 POLIG) | 181 |
| STECKDOSEN - EINBAUSATZ (4 POLIG) (SEITE) | 181 |
| STECKDOSEN - EINBAUSATZ (4 STIFTE) | 115 |
| | 129 |
| | 136 |
| | 193 |
| | 208 |
| | 210 |
| | 212 |
| STECKDOSEN - EINBAUSATZ (6 STIFTE) | 210 |
| | 212 |
| STECKDOSEN - EINBAUSATZ (6POLIG) | 133 |
| | 138 |
| | 181 |
| | 755 |
| | 797 |
| STECKDOSEN - EINBAUSATZ (6POLIG) | 124 |
| | 126 |
| STECKDOSEN - EINBAUSATZ (8POLIG) | 178 |
| | 203 |
| | 753 |
| STECKDOSENVERDRAHTUNG | 202 |
| STELLUNGSSTEUERUNG | 112 |
| | 195 |
| STEUERHEBEL | 350 |
| | 351 |
| STEUERKONSOLE | 719 |
| | 720 |
| STEUERKONSOLENABDECKUNG | 727 |
| STEUERVENTIL | 559 |
| | 561 |
| | 563 |
| | 565 |
| | 567 |
| | 569 |
| | 571 |
| | 573 |
| | 575 |
| | 577 |
| STIELAUFHÄNGUNG | 604 |
| STIELZYLINDER | 385 |
| STIELZYLINDERLEITUNGEN | 501 |
| | 502 |
| | 505 |
| STIRNRADGEHÄUSE | 37 |


## T


| Bezeichnung | Seite |
|---|---|
| TELESKOPSTIEL | 609 |
| | 611 |
| TELESKOPSTIELLEITUNGEN | 445 |
| TELESKOPSTIELZYLINDER | 378 |
| | 379 |
| TEMPERATURGEBER | 189 |
| TEMPERATURSCHALTER | 170 |
| THERMOSTATSCHALTER | 700 |
| TIEFLÖFFEL-HYDRAULIKNOTLEITUNGEN | 402 |
| | 404 |
| | 405 |
| | 407 |
| | 408 |
| | 412 |
| | 416 |
| | 420 |
| | 424 |


* ÜBERSETZUNG ZUM ZEITPUNKT DER DRUCKLEGUNG NICHT VORHANDEN

# STICHWORTVERZEICHNIS


| Bezeichnung | Seite |
|---|---|
| | 428 |
| | 432 |
| | 436 |
| TIEFLÖFFELLEITUNGEN | 398 |
| | 400 |
| TRANSPORTHALTERUNG | 590 |
| | 591 |
| TRANSPORTSPERRE | 593 |
| | 599 |
| | 600 |
| | 601 |
| | 602 |
| | 603 |
| TURBOLADER | 84 |
| TÜRFENSTER | 793 |
| | 795 |
| TYPENSCHILDBEFESTIGUNG | 342 |
| | 343 |

## U

| | |
|---|---|
| ÜBERDRUCKVENTIL | 254 |
| | 260 |
| | 305 |
| | 559 |
| | 571 |
| | 575 |
| ÜBERDRUCKVENTIL (KUPPLUNGSDRUCK) | 248 |
| ÜBERDRUCKVENTIL (WANDLER) | 248 |
| UMBAUSATZ - ZULASSUNG | 16 |
| | 17 |
| | 18 |
| | 19 |
| UMLAUFKÜHLWASSERHEIZUNG | 114 |
| UMRÜSTSATZ - HYDRAULIKHEBEL | 369 |
| UNIVERSAL-ZAHNSPITZE | 697 |
| UNIVERSALSCHAUFEL | 621 |
| | 622 |
| | 623 |
| | 624 |
| UNTERLEGKEIL - EINBAUSATZ | 801 |

## V

| | |
|---|---|
| *VALVE GP-CHECK | 558 |
| *VALVE GP-PUMP CONTROL | 581 |
| | 582 |
| VENTIL (WASSER) | 698 |
| | 741 |
| VENTILANORDNUNGS-BEFESTIGUNGS-SATZ | 525 |
| | 526 |
| VENTILANORDNUNGSDECKEL | 371 |
| VENTILBLOCK U. BEFESTIGUNG | 541 |
| VENTILDECKEL | 25 |
| VENTILSATZ (2-VENTIL) | 547 |
| | 548 |
| VENTILSATZ (3-VENTIL) | 549 |
| | 550 |
| VENTILSATZ (4-VENTIL) | 551 |
| | 552 |
| VENTILSATZ (5-VENTIL) | 553 |
| | 554 |
| VENTILSATZ (6-VENTIL) | 556 |
| | 557 |
| VENTILSTEUERUNG | 50 |
| VERBINDER | 451 |
| VERBINDUNGSSTECKER | 165 |
| VERBINDUNGSVENTIL | 347 |
| VERDRAHTUNG - SCHAUFELAUSSCHALTER U. EINSTELLER | 195 |
| VERDRAHTUNG, HINTEN | 203 |
| VERRIEGELUNG - VIERTER GANG | 236 |
| VORHÄNGESCHLOSS | 802 |
| | 803 |
| VORRANGVENTIL | 305 |
| VORSTEUERLEITUNGEN | 474 |

## W

| | |
|---|---|
| WARNANZEIGEMODUL | 753 |
| | 754 |
| WARNAUFKLEBER | 804 |
| | 805 |
| WARNAUFKLEBER (HOCHDRUCKZYLINDER) | 409 |
| | 412 |
| | 416 |
| | 420 |
| | 424 |
| | 428 |
| | 432 |
| | 436 |
| | 487 |
| | 807 |
| WARNHORN, ELEKTR. | 745 |
| WARNLEUCHTEN | 161 |
| WARTUNGSSATZ | 761 |
| WASSERABSCHEIDER | 99 |
| WASSERTEMPERATURREGLER | 53 |
| WECHSELGETRIEBE | 248 |
| WETTERDACH | 711 |
| WISCHERBLATT | 797 |


* ÜBERSETZUNG ZUM ZEITPUNKT DER DRUCKLEGUNG NICHT VORHANDEN

# STICHWORTVERZEICHNIS


| Bezeichnung | Seite |
|---|---|
| **Z** | |
| ZAHNRADSATZ (STARTERMOTOR) | 166 |
| ZAPFWELLE | 537 |
| ZULASSUNGSSCHILDLEUCHTE | 128 |
| ZUMESSPUMPE | 303 |
| ZUSATZVENTIL | 544 |
| | 545 |
| | 546 |
| ZYLINDER | 292 |
| ZYLINDERAUFHÄNGUNG | 527 |
| ZYLINDERKOPF | 32 |
| | 33 |
| **4** | |
| 4-BLOCK-VENTILSATZ | 542 |
| **5** | |
| 5-VENTIL-BLOCK | 542 |
| | 543 |
| **6** | |
| 6-FACH-VENTILBLOCK | 543 |


* ÜBERSETZUNG ZUM ZEITPUNKT DER DRUCKLEGUNG NICHT VORHANDEN

# MACHINE ARRANGEMENT

## *240-8490* BACKHOE AR-EXTENDABLE STICK

**S/N: BXC1-UP; DSX1-UP**
**AN ATTACHMENT**

**SMCS-6504, 6533** **i01971158**

| NOTE | PART NUMBER | QTY | PART NAME 1 2 3 4 5 6 (PRODUCT LEVEL) | SEE PAGE |
|---|---|---|---|---|
| Y | **206-0518** | 1 | CYLINDER GP-BACKHOE BUCKET | 374 |
| Y | *183-6059* | 1 | FRAME GP-SWING | 329 |
| Y | *183-8506* | 1 | LINES GP-BACKHOE | 398 |
| Y | *183-8508* | 1 | LINES GP-BACKHOE AUXILIARY | 402 |
| Y | *183-8543* | 1 | LINES GP-BOOM | 440 |
| Y | *175-7618* | 1 | LINES GP-SIDESHIFT LOCK | 489 |
| Y | *183-8544* | 1 | LINES GP-STICK | 501 |
| Y | *183-8548* | 1 | LINES GP-STICK | 505 |
| Y | *167-8330* | 1 | LINKAGE GP-BACKHOE BUCKET | 596 |
| Y | *186-2950* | 1 | MOUNTING GP-LINES | 532 |
| Y | *184-9950* | 1 | MOUNTING GP-STICK | 604 |
| Y | *184-9754* | 1 | STICK GP-EXTENDABLE | 611 |

Y-SEPARATE ILLUSTRATION

**<END>**

## *240-8491* BACKHOE AR-EXTENDABLE STICK—BOOM, STICK LOCKS

**S/N: BXC1-UP; DSX1-UP**
**AN ATTACHMENT**

**SMCS-6504, 6533** **i01971171**

| NOTE | PART NUMBER | QTY | PART NAME 1 2 3 4 5 6 (PRODUCT LEVEL) | SEE PAGE |
|---|---|---|---|---|
| Y | **206-0518** | 1 | CYLINDER GP-BACKHOE BUCKET | 374 |
| Y | *183-6059* | 1 | FRAME GP-SWING | 329 |
| Y | *183-8506* | 1 | LINES GP-BACKHOE | 398 |
| Y | *183-8508* | 1 | LINES GP-BACKHOE AUXILIARY | 402 |
| Y | *186-1594* | 1 | LINES GP-DRAIN | 444 |
| Y | *183-8549* | 1 | LINES GP-LOAD CONTROL VALVE | 451 |
| Y | *175-7618* | 1 | LINES GP-SIDESHIFT LOCK | 489 |
| Y | *183-8548* | 1 | LINES GP-STICK | 505 |
| Y | *167-8330* | 1 | LINKAGE GP-BACKHOE BUCKET | 596 |
| Y | *186-2950* | 1 | MOUNTING GP-LINES | 532 |
| Y | *184-9950* | 1 | MOUNTING GP-STICK | 604 |
| Y | *184-9754* | 1 | STICK GP-EXTENDABLE | 611 |

Y-SEPARATE ILLUSTRATION

**<END>**

# MACHINE ARRANGEMENT

## *240-8492* BACKHOE AR-EXTENDABLE STICK—ONE WAY LINES

**S/N: BXC1-UP; DSX1-UP**

**AN ATTACHMENT**

**SMCS-6504, 6533** **i01998547**

| NOTE | PART NUMBER | QTY | PART NAME 1 2 3 4 5 6 (PRODUCT LEVEL) | SEE PAGE |
|---|---|---|---|---|
| Y | **206-0518** | 1 | CYLINDER GP-BACKHOE BUCKET | 374 |
| Y | *183-6059* | 1 | FRAME GP-SWING | 329 |
| Y | *183-8506* | 1 | LINES GP-BACKHOE | 398 |
| Y | *235-5867* | 1 | LINES GP-BACKHOE AUXILIARY | 436 |
| Y | *183-8508* | 1 | LINES GP-BACKHOE AUXILIARY | 402 |
| Y | *183-8543* | 1 | LINES GP-BOOM | 440 |
| Y | *175-7618* | 1 | LINES GP-SIDESHIFT LOCK | 489 |
| Y | *183-8544* | 1 | LINES GP-STICK | 501 |
| Y | *183-8547* | 1 | LINES GP-STICK (EXTENSION) | 502 |
| Y | *167-8330* | 1 | LINKAGE GP-BACKHOE BUCKET | 596 |
| Y | *184-9950* | 1 | MOUNTING GP-STICK | 604 |
| Y | *184-9754* | 1 | STICK GP-EXTENDABLE | 611 |

Y-SEPARATE ILLUSTRATION

**<END>**

## *240-8493* BACKHOE AR-EXTENDABLE STICK—NARROW FRAME

**S/N: BXC1-UP; DSX1-UP**

**AN ATTACHMENT**

**SMCS-6504, 6533** **i01970982**

| NOTE | PART NUMBER | QTY | PART NAME 1 2 3 4 5 6 (PRODUCT LEVEL) | SEE PAGE |
|---|---|---|---|---|
| Y | **206-0518** | 1 | CYLINDER GP-BACKHOE BUCKET | 374 |
| Y | *183-6059* | 1 | FRAME GP-SWING | 329 |
| Y | *235-5867* | 1 | LINES GP-BACKHOE AUXILIARY | 436 |
| Y | *183-8506* | 1 | LINES GP-BACKHOE | 398 |
| Y | *183-8508* | 1 | LINES GP-BACKHOE AUXILIARY | 402 |
| Y | *186-1594* | 1 | LINES GP-DRAIN | 444 |
| Y | *183-8549* | 1 | LINES GP-LOAD CONTROL VALVE | 451 |
| Y | *175-7618* | 1 | LINES GP-SIDESHIFT LOCK | 489 |
| Y | *183-8547* | 1 | LINES GP-STICK | 502 |
| Y | *167-8330* | 1 | LINKAGE GP-BACKHOE BUCKET | 596 |
| Y | *186-2950* | 1 | MOUNTING GP-LINES | 532 |
| Y | *184-9950* | 1 | MOUNTING GP-STICK | 604 |
| Y | *184-9754* | 1 | STICK GP-EXTENDABLE | 611 |

Y-SEPARATE ILLUSTRATION

**<END>**

# MACHINE ARRANGEMENT

## *240-8504* BACKHOE AR-EXTENDABLE STICK—NARROW FRAME

**S/N: BXC1-UP; DSX1-UP**

**AN ATTACHMENT**

**SMCS-6504, 6533** **i01998549**

| NOTE | PART NUMBER | QTY | PART NAME 1 2 3 4 5 6 (PRODUCT LEVEL) | SEE PAGE |
|---|---|---|---|---|
| Y | **206-0518** | 1 | CYLINDER GP-BACKHOE BUCKET | 374 |
| Y | *183-6059* | 1 | FRAME GP-SWING | 329 |
| Y | *183-8524* | 1 | LINES GP-BACKHOE | 400 |
| Y | *183-8526* | 1 | LINES GP-BACKHOE AUXILIARY | 405 |
| Y | *183-8543* | 1 | LINES GP-BOOM | 440 |
| Y | *183-8523* | 1 | LINES GP-SIDESHIFT LOCK | 491 |
| Y | *183-8544* | 1 | LINES GP-STICK | 501 |
| Y | *183-8548* | 1 | LINES GP-STICK (EXTENSION) | 505 |
| Y | *167-8330* | 1 | LINKAGE GP-BACKHOE BUCKET | 596 |
| Y | *186-2950* | 1 | MOUNTING GP-LINES | 532 |
| Y | *184-9950* | 1 | MOUNTING GP-STICK | 604 |
| Y | *184-9754* | 1 | STICK GP-EXTENDABLE | 611 |

Y-SEPARATE ILLUSTRATION

**<END>**

## *240-8505* BACKHOE AR-EXTENDABLE STICK—

**BOOM AND STICK LOCKS**

**S/N: BXC1-UP; DSX1-UP**

**AN ATTACHMENT**

**SMCS-6504, 6533** **i01998553**

| NOTE | PART NUMBER | QTY | PART NAME 1 2 3 4 5 6 (PRODUCT LEVEL) | SEE PAGE |
|---|---|---|---|---|
| Y | **206-0518** | 1 | CYLINDER GP-BACKHOE BUCKET | 374 |
| Y | *183-6059* | 1 | FRAME GP-SWING | 329 |
| Y | *183-8524* | 1 | LINES GP-BACKHOE | 400 |
| Y | *235-5864* | 1 | LINES GP-BACKHOE AUXILIARY | 428 |
| Y | *183-8526* | 1 | LINES GP-BACKHOE AUXILIARY | 405 |
| Y | *183-8543* | 1 | LINES GP-BOOM | 440 |
| Y | *183-8523* | 1 | LINES GP-SIDESHIFT LOCK | 491 |
| Y | *183-8544* | 1 | LINES GP-STICK | 501 |
| Y | *183-8547* | 1 | LINES GP-STICK (EXTENSION) | 502 |
| Y | *167-8330* | 1 | LINKAGE GP-BACKHOE BUCKET | 596 |
| Y | *186-2950* | 1 | MOUNTING GP-LINES | 532 |
| Y | *184-9950* | 1 | MOUNTING GP-STICK | 604 |
| Y | *184-9754* | 1 | STICK GP-EXTENDABLE | 611 |

Y-SEPARATE ILLUSTRATION

**<END>**

# MACHINE ARRANGEMENT

## *240-8506* BACKHOE AR-EXTENDABLE STICK–BOOM, STICK LOCKS–NARROW FRAME

**S/N: BXC1-UP; DSX1-UP**

**AN ATTACHMENT**

**SMCS-6504, 6533** **i01970905**

| NOTE | PART NUMBER | QTY | PART NAME 1 2 3 4 5 6 (PRODUCT LEVEL) | SEE PAGE |
|---|---|---|---|---|
| Y | **206-0518** | 1 | CYLINDER GP-BACKHOE BUCKET | 374 |
| Y | *183-6059* | 1 | FRAME GP-SWING | 329 |
| Y | *183-8524* | 1 | LINES GP-BACKHOE | 400 |
| Y | *183-8526* | 1 | LINES GP-BACKHOE AUXILIARY | 405 |
| Y | *186-1594* | 1 | LINES GP-DRAIN | 444 |
| Y | *183-8549* | 1 | LINES GP-LOAD CONTROL VALVE | 451 |
| Y | *183-8523* | 1 | LINES GP-SIDESHIFT LOCK | 491 |
| Y | *183-8548* | 1 | LINES GP-STICK | 505 |
| Y | *167-8330* | 1 | LINKAGE GP-BACKHOE BUCKET | 596 |
| Y | *186-2950* | 1 | MOUNTING GP-LINES | 532 |
| Y | *184-9950* | 1 | MOUNTING GP-STICK | 604 |
| Y | *184-9754* | 1 | STICK GP-EXTENDABLE | 611 |

Y-SEPARATE ILLUSTRATION

**<END>**

## *240-8507* BACKHOE AR-EXTENDABLE STICK–NARROW FRAME, ONE WAY LINES, BOOM AND STICK LOCKS

**S/N: BXC1-UP; DSX1-UP**

**AN ATTACHMENT**

**SMCS-6504, 6533** **i01970995**

| NOTE | PART NUMBER | QTY | PART NAME 1 2 3 4 5 6 (PRODUCT LEVEL) | SEE PAGE |
|---|---|---|---|---|
| Y | **206-0518** | 1 | CYLINDER GP-BACKHOE BUCKET | 374 |
| Y | *183-6059* | 1 | FRAME GP-SWING | 329 |
| Y | *235-5864* | 1 | LINES GP-BACKHOE AUXILIARY | 428 |
| Y | *183-8524* | 1 | LINES GP-BACKHOE | 400 |
| Y | *183-8526* | 1 | LINES GP-BACKHOE AUXILIARY | 405 |
| Y | *186-1593* | 1 | LINES GP-DRAIN | 443 |
| Y | *183-8549* | 1 | LINES GP-LOAD CONTROL VALVE | 451 |
| Y | *183-8523* | 1 | LINES GP-SIDESHIFT LOCK | 491 |
| Y | *183-8547* | 1 | LINES GP-STICK | 502 |
| Y | *167-8330* | 1 | LINKAGE GP-BACKHOE BUCKET | 596 |
| Y | *186-2950* | 1 | MOUNTING GP-LINES | 532 |
| Y | *184-9950* | 1 | MOUNTING GP-STICK | 604 |
| Y | *184-9754* | 1 | STICK GP-EXTENDABLE | 611 |

Y-SEPARATE ILLUSTRATION

**<END>**

# MACHINE ARRANGEMENT

## *240-8689* BACKHOE AR-EXTENDABLE STICK

**S/N: BXC1-UP**

**AN ATTACHMENT**

**SMCS-6504, 6533** **i01970921**

| NOTE | PART NUMBER | QTY | PART NAME 1 2 3 4 5 6 (PRODUCT LEVEL) | SEE PAGE |
|---|---|---|---|---|
| Y | **206-0518** | 1 | CYLINDER GP-BACKHOE BUCKET | 374 |
| Y | *183-6059* | 1 | FRAME GP-SWING | 329 |
| Y | *183-8506* | 1 | LINES GP-BACKHOE | 398 |
| Y | *183-8508* | 1 | LINES GP-BACKHOE AUXILIARY | 402 |
| Y | *183-8543* | 1 | LINES GP-BOOM | 440 |
| Y | *175-7618* | 1 | LINES GP-SIDESHIFT LOCK | 489 |
| Y | *183-8544* | 1 | LINES GP-STICK | 501 |
| Y | *183-8548* | 1 | LINES GP-STICK | 505 |
| Y | *175-7877* | 1 | LINK GP-SHIPPING | 593 |
| Y | *151-7928* | 1 | LINKAGE GP-BACKHOE BUCKET | 594 |
| Y | *186-2950* | 1 | MOUNTING GP-LINES | 532 |
| Y | *184-9950* | 1 | MOUNTING GP-STICK | 604 |
| Y | *184-6786* | 1 | STICK GP-EXTENDABLE | 609 |

Y-SEPARATE ILLUSTRATION

**<END>**

## *240-8690* BACKHOE AR-EXTENDABLE STICK—BOOM, STICK LOCKS

**S/N: BXC1-UP**

**AN ATTACHMENT**

**SMCS-6504, 6533** **i01970924**

| NOTE | PART NUMBER | QTY | PART NAME 1 2 3 4 5 6 (PRODUCT LEVEL) | SEE PAGE |
|---|---|---|---|---|
| Y | **206-0518** | 1 | CYLINDER GP-BACKHOE BUCKET | 374 |
| Y | *183-6059* | 1 | FRAME GP-SWING | 329 |
| Y | *183-8506* | 1 | LINES GP-BACKHOE | 398 |
| Y | *183-8508* | 1 | LINES GP-BACKHOE AUXILIARY | 402 |
| Y | *186-1594* | 1 | LINES GP-DRAIN | 444 |
| Y | *183-8549* | 1 | LINES GP-LOAD CONTROL VALVE | 451 |
| Y | *175-7618* | 1 | LINES GP-SIDESHIFT LOCK | 489 |
| Y | *183-8548* | 1 | LINES GP-STICK | 505 |
| Y | *175-7877* | 1 | LINK GP-SHIPPING | 593 |
| Y | *151-7928* | 1 | LINKAGE GP-BACKHOE BUCKET | 594 |
| Y | *186-2950* | 1 | MOUNTING GP-LINES | 532 |
| Y | *184-9950* | 1 | MOUNTING GP-STICK | 604 |
| Y | *184-6786* | 1 | STICK GP-EXTENDABLE | 609 |

Y-SEPARATE ILLUSTRATION

**<END>**

# MACHINE ARRANGEMENT

## *240-8691* BACKHOE AR-EXTENDABLE STICK

**S/N: BXC1-UP**

**AN ATTACHMENT**

**SMCS-6504, 6533** **i02003446**

| NOTE | PART NUMBER | QTY | PART NAME 1 2 3 4 5 6 (PRODUCT LEVEL) | SEE PAGE |
|---|---|---|---|---|
| Y | **206-0518** | 1 | CYLINDER GP-BACKHOE BUCKET | 374 |
| Y | *183-6059* | 1 | FRAME GP-SWING | 329 |
| Y | *235-5867* | 1 | LINES GP-BACKHOE AUXILIARY | 436 |
| Y | *183-8506* | 1 | LINES GP-BACKHOE | 398 |
| Y | *183-8508* | 1 | LINES GP-BACKHOE AUXILIARY | 402 |
| Y | *183-8543* | 1 | LINES GP-BOOM | 440 |
| Y | *175-7618* | 1 | LINES GP-SIDESHIFT LOCK | 489 |
| Y | *183-8544* | 1 | LINES GP-STICK | 501 |
| Y | *183-8547* | 1 | LINES GP-STICK (EXTENSION) | 502 |
| Y | *175-7877* | 1 | LINK GP-SHIPPING | 593 |
| Y | *151-7928* | 1 | LINKAGE GP-BACKHOE BUCKET | 594 |
| Y | *186-2950* | 1 | MOUNTING GP-LINES | 532 |
| Y | *184-9950* | 1 | MOUNTING GP-STICK | 604 |
| Y | *184-6786* | 1 | STICK GP-EXTENDABLE | 609 |

Y-SEPARATE ILLUSTRATION

**<END>**

## *240-8692* BACKHOE AR-EXTENDABLE STICK–

**ONE WAY LINES, BOOM AND STICK LOCKS**

**S/N: BXC1-UP**

**AN ATTACHMENT**

**SMCS-6504, 6533** **i01971000**

| NOTE | PART NUMBER | QTY | PART NAME 1 2 3 4 5 6 (PRODUCT LEVEL) | SEE PAGE |
|---|---|---|---|---|
| Y | **206-0518** | 1 | CYLINDER GP-BACKHOE BUCKET | 374 |
| Y | *183-6059* | 1 | FRAME GP-SWING | 329 |
| Y | *235-5867* | 1 | LINES GP-BACKHOE AUXILIARY | 436 |
| Y | *183-8506* | 1 | LINES GP-BACKHOE | 398 |
| Y | *183-8508* | 1 | LINES GP-BACKHOE AUXILIARY | 402 |
| Y | *186-1594* | 1 | LINES GP-DRAIN | 444 |
| Y | *183-8549* | 1 | LINES GP-LOAD CONTROL VALVE | 451 |
| Y | *175-7618* | 1 | LINES GP-SIDESHIFT LOCK | 489 |
| Y | *183-8547* | 1 | LINES GP-STICK | 502 |
| Y | *175-7877* | 1 | LINK GP-SHIPPING | 593 |
| Y | *151-7928* | 1 | LINKAGE GP-BACKHOE BUCKET | 594 |
| Y | *186-2950* | 1 | MOUNTING GP-LINES | 532 |
| Y | *184-9950* | 1 | MOUNTING GP-STICK | 604 |
| Y | *184-6786* | 1 | STICK GP-EXTENDABLE | 609 |

Y-SEPARATE ILLUSTRATION

**<END>**

# MACHINE ARRANGEMENT

## *240-8699* BACKHOE AR-EXTENDABLE STICK—NARROW FRAME

**S/N: DSX1-UP**

**AN ATTACHMENT**

**SMCS-6504, 6533** **i02003447**

| NOTE | PART NUMBER | QTY | PART NAME 1 2 3 4 5 6 (PRODUCT LEVEL) | SEE PAGE |
|---|---|---|---|---|
| Y | **206-0518** | 1 | CYLINDER GP-BACKHOE BUCKET | 374 |
| Y | *183-6059* | 1 | FRAME GP-SWING | 329 |
| Y | *183-8524* | 1 | LINES GP-BACKHOE | 400 |
| Y | *183-8526* | 1 | LINES GP-BACKHOE AUXILIARY | 405 |
| Y | *183-8543* | 1 | LINES GP-BOOM | 440 |
| Y | *183-8523* | 1 | LINES GP-SIDESHIFT LOCK | 491 |
| Y | *183-8544* | 1 | LINES GP-STICK | 501 |
| Y | *183-8548* | 1 | LINES GP-STICK (EXTENSION) | 505 |
| Y | *175-7877* | 1 | LINK GP-SHIPPING | 593 |
| Y | *151-7928* | 1 | LINKAGE GP-BACKHOE BUCKET | 594 |
| Y | *186-2950* | 1 | MOUNTING GP-LINES | 532 |
| Y | *184-9950* | 1 | MOUNTING GP-STICK | 604 |
| Y | *184-6786* | 1 | STICK GP-EXTENDABLE | 609 |

Y-SEPARATE ILLUSTRATION

**<END>**

## *240-8700* BACKHOE AR-EXTENDABLE STICK—BOOM, STICK LOCKS—NARROW FRAME

**S/N: DSX1-UP**

**AN ATTACHMENT**

**SMCS-6504, 6533** **i01970939**

| NOTE | PART NUMBER | QTY | PART NAME 1 2 3 4 5 6 (PRODUCT LEVEL) | SEE PAGE |
|---|---|---|---|---|
| Y | **206-0518** | 1 | CYLINDER GP-BACKHOE BUCKET | 374 |
| Y | *183-6059* | 1 | FRAME GP-SWING | 329 |
| Y | *183-8524* | 1 | LINES GP-BACKHOE | 400 |
| Y | *183-8526* | 1 | LINES GP-BACKHOE AUXILIARY | 405 |
| Y | *186-1593* | 1 | LINES GP-DRAIN | 443 |
| Y | *183-8549* | 1 | LINES GP-LOAD CONTROL VALVE | 451 |
| Y | *183-8523* | 1 | LINES GP-SIDESHIFT LOCK | 491 |
| Y | *183-8548* | 1 | LINES GP-STICK | 505 |
| Y | *175-7877* | 1 | LINK GP-SHIPPING | 593 |
| Y | *151-7928* | 1 | LINKAGE GP-BACKHOE BUCKET | 594 |
| Y | *186-2950* | 1 | MOUNTING GP-LINES | 532 |
| Y | *184-9950* | 1 | MOUNTING GP-STICK | 604 |
| Y | *184-6786* | 1 | STICK GP-EXTENDABLE | 609 |

Y-SEPARATE ILLUSTRATION

**<END>**

# MACHINE ARRANGEMENT

## *240-8701* BACKHOE AR-EXTENDABLE STICK–
### ONE WAY LINES, NARROW FRAME
### S/N: DSX1-UP
### AN ATTACHMENT

**SMCS-6504, 6533** **i02003452**

| NOTE | PART NUMBER | QTY | PART NAME 1 2 3 4 5 6 (PRODUCT LEVEL) | SEE PAGE |
|---|---|---|---|---|
| Y | **206-0518** | 1 | CYLINDER GP-BACKHOE BUCKET | 374 |
| Y | *183-6059* | 1 | FRAME GP-SWING | 329 |
| Y | *235-5864* | 1 | LINES GP-BACKHOE AUXILIARY | 428 |
| Y | *183-8524* | 1 | LINES GP-BACKHOE | 400 |
| Y | *183-8526* | 1 | LINES GP-BACKHOE AUXILIARY | 405 |
| Y | *183-8543* | 1 | LINES GP-BOOM | 440 |
| Y | *183-8523* | 1 | LINES GP-SIDESHIFT LOCK | 491 |
| Y | *183-8544* | 1 | LINES GP-STICK | 501 |
| Y | *183-8547* | 1 | LINES GP-STICK (EXTENSION) | 502 |
| Y | *175-7877* | 1 | LINK GP-SHIPPING | 593 |
| Y | *151-7928* | 1 | LINKAGE GP-BACKHOE BUCKET | 594 |
| Y | *186-2950* | 1 | MOUNTING GP-LINES | 532 |
| Y | *184-9950* | 1 | MOUNTING GP-STICK | 604 |
| Y | *184-6786* | 1 | STICK GP-EXTENDABLE | 609 |

Y-SEPARATE ILLUSTRATION

**<END>**

## *240-8702* BACKHOE AR-EXTENDABLE STICK–
### ONE WAY LINES, BOOM AND STICK LOCKS, NARROW FRAME
### S/N: DSX1-UP
### AN ATTACHMENT

**SMCS-6504, 6533** **i02003454**

| NOTE | PART NUMBER | QTY | PART NAME 1 2 3 4 5 6 (PRODUCT LEVEL) | SEE PAGE |
|---|---|---|---|---|
| Y | **206-0518** | 1 | CYLINDER GP-BACKHOE BUCKET | 374 |
| Y | *183-6059* | 1 | FRAME GP-SWING | 329 |
| Y | *235-5864* | 1 | LINES GP-BACKHOE AUXILIARY | 428 |
| Y | *183-8524* | 1 | LINES GP-BACKHOE | 400 |
| Y | *183-8526* | 1 | LINES GP-BACKHOE AUXILIARY | 405 |
| Y | *186-1593* | 1 | LINES GP-DRAIN | 443 |
| Y | *183-8549* | 1 | LINES GP-LOAD CONTROL VALVE | 451 |
| Y | *183-8523* | 1 | LINES GP-SIDESHIFT LOCK | 491 |
| Y | *183-8547* | 1 | LINES GP-STICK (EXTENSION) | 502 |
| Y | *175-7877* | 1 | LINK GP-SHIPPING | 593 |
| Y | *151-7928* | 1 | LINKAGE GP-BACKHOE BUCKET | 594 |
| Y | *186-2950* | 1 | MOUNTING GP-LINES | 532 |
| Y | *184-9950* | 1 | MOUNTING GP-STICK | 604 |
| Y | *184-6786* | 1 | STICK GP-EXTENDABLE | 609 |

Y-SEPARATE ILLUSTRATION

**<END>**

# MACHINE ARRANGEMENT

## *240-8683* BACKHOE AR-STANDARD STICK—STANDARD STICK

**S/N: BXC1-UP**

**AN ATTACHMENT**

**SMCS-6502, 6504** **i02003500**

| NOTE | PART NUMBER | QTY | PART NAME 1 2 3 4 5 6 (PRODUCT LEVEL) | SEE PAGE |
|---|---|---|---|---|
| Y | **206-0514** | 1 | CYLINDER GP-BACKHOE BUCKET | 372 |
| Y | *183-6058* | 1 | FRAME GP-SWING | 326 |
| Y | *183-8506* | 1 | LINES GP-BACKHOE | 398 |
| Y | *183-8543* | 1 | LINES GP-BOOM | 440 |
| Y | *193-0703* | 1 | LINES GP-BUCKET CYLINDER | 441 |
| Y | *183-8530* | 1 | LINES GP-SIDESHIFT LOCK | 493 |
| Y | *183-8544* | 1 | LINES GP-STICK | 501 |
| Y | *175-7877* | 1 | LINK GP-SHIPPING | 593 |
| Y | *151-7928* | 1 | LINKAGE GP-BACKHOE BUCKET | 594 |
| Y | *165-7769* | 1 | MOUNTING GP-LINES (BACKHOE) | 529 |
| Y | *175-7620* | 1 | MOUNTING GP-LINES (BANK VALVE) | 531 |
| Y | *184-6178* | 1 | STICK GP-HOE | 613 |

Y-SEPARATE ILLUSTRATION

**<END>**

## *240-8684* BACKHOE AR-STANDARD STICK—BOOM, STICK LOCKS

**S/N: BXC1-UP**

**AN ATTACHMENT**

**SMCS-6502, 6504** **i02003502**

| NOTE | PART NUMBER | QTY | PART NAME 1 2 3 4 5 6 (PRODUCT LEVEL) | SEE PAGE |
|---|---|---|---|---|
| Y | **206-0514** | 1 | CYLINDER GP-BACKHOE BUCKET | 372 |
| Y | *183-6058* | 1 | FRAME GP-SWING | 326 |
| Y | *183-8506* | 1 | LINES GP-BACKHOE | 398 |
| Y | *193-0703* | 1 | LINES GP-BUCKET CYLINDER | 441 |
| Y | *186-1594* | 1 | LINES GP-DRAIN | 444 |
| Y | *183-8549* | 1 | LINES GP-LOAD CONTROL VALVE | 451 |
| Y | *183-8530* | 1 | LINES GP-SIDESHIFT LOCK | 493 |
| Y | *175-7877* | 1 | LINK GP-SHIPPING | 593 |
| Y | *151-7928* | 1 | LINKAGE GP-BACKHOE BUCKET | 594 |
| Y | *175-7620* | 1 | MOUNTING GP-LINES (BANK VALVE) | 531 |
| Y | *186-2950* | 1 | MOUNTING GP-LINES (BACKHOE) | 532 |
| Y | *184-6178* | 1 | STICK GP-HOE | 613 |

Y-SEPARATE ILLUSTRATION

**<END>**

# MACHINE ARRANGEMENT

## *240-8685* BACKHOE AR—ONE WAY LINES

**S/N: BXC1-UP**

**AN ATTACHMENT**

**SMCS-6502, 6504** **i01970997**

| NOTE | PART NUMBER | QTY | PART NAME 1 2 3 4 5 6 (PRODUCT LEVEL) | SEE PAGE |
|---|---|---|---|---|
| Y | **206-0514** | 1 | CYLINDER GP-BACKHOE BUCKET | 372 |
| Y | *183-6059* | 1 | FRAME GP-SWING | 329 |
| Y | *235-5865* | 1 | LINES GP-BACKHOE AUXILIARY | 432 |
| Y | *183-8506* | 1 | LINES GP-BACKHOE | 398 |
| Y | *183-8509* | 1 | LINES GP-BACKHOE AUXILIARY | 404 |
| Y | *183-8543* | 1 | LINES GP-BOOM | 440 |
| Y | *193-0703* | 1 | LINES GP-BUCKET CYLINDER | 441 |
| Y | *175-7618* | 1 | LINES GP-SIDESHIFT LOCK | 489 |
| Y | *183-8544* | 1 | LINES GP-STICK | 501 |
| Y | *175-7877* | 1 | LINK GP-SHIPPING | 593 |
| Y | *151-7928* | 1 | LINKAGE GP-BACKHOE BUCKET | 594 |
| Y | *186-2950* | 1 | MOUNTING GP-LINES | 532 |
| Y | *184-6178* | 1 | STICK GP-HOE | 613 |

Y-SEPARATE ILLUSTRATION

**<END>**

## *240-8686* BACKHOE AR—ONE WAY LINES—BOOM, STICK LOCKS

**S/N: BXC1-UP**

**AN ATTACHMENT**

**SMCS-6502, 6504** **i01970998**

| NOTE | PART NUMBER | QTY | PART NAME 1 2 3 4 5 6 (PRODUCT LEVEL) | SEE PAGE |
|---|---|---|---|---|
| Y | **206-0514** | 1 | CYLINDER GP-BACKHOE BUCKET | 372 |
| Y | *183-6059* | 1 | FRAME GP-SWING | 329 |
| Y | *235-5865* | 1 | LINES GP-BACKHOE AUXILIARY | 432 |
| Y | *183-8506* | 1 | LINES GP-BACKHOE | 398 |
| Y | *183-8509* | 1 | LINES GP-BACKHOE AUXILIARY | 404 |
| Y | *193-0703* | 1 | LINES GP-BUCKET CYLINDER | 441 |
| Y | *186-1594* | 1 | LINES GP-DRAIN | 444 |
| Y | *183-8549* | 1 | LINES GP-LOAD CONTROL VALVE | 451 |
| Y | *175-7618* | 1 | LINES GP-SIDESHIFT LOCK | 489 |
| Y | *175-7877* | 1 | LINK GP-SHIPPING | 593 |
| Y | *151-7928* | 1 | LINKAGE GP-BACKHOE BUCKET | 594 |
| Y | *186-2950* | 1 | MOUNTING GP-LINES | 532 |
| Y | *184-6178* | 1 | STICK GP-HOE | 613 |

Y-SEPARATE ILLUSTRATION

**<END>**

# MACHINE ARRANGEMENT

## *240-8687* BACKHOE AR-STANDARD STICK

**S/N: BXC1-UP**

**AN ATTACHMENT**

**SMCS-6502, 6504** **i02003542**

| NOTE | PART NUMBER | QTY | PART NAME 1 2 3 4 5 6 (PRODUCT LEVEL) | SEE PAGE |
|---|---|---|---|---|
| Y | **206-0514** | 1 | CYLINDER GP-BACKHOE BUCKET | 372 |
| Y | *183-6058* | 1 | FRAME GP-SWING | 326 |
| Y | *183-8506* | 1 | LINES GP-BACKHOE | 398 |
| Y | *183-8543* | 1 | LINES GP-BOOM | 440 |
| Y | *193-0703* | 1 | LINES GP-BUCKET CYLINDER | 441 |
| Y | *175-7618* | 1 | LINES GP-SIDESHIFT LOCK | 489 |
| Y | *183-8544* | 1 | LINES GP-STICK | 501 |
| Y | *175-7877* | 1 | LINK GP-SHIPPING | 593 |
| Y | *151-7928* | 1 | LINKAGE GP-BACKHOE BUCKET | 594 |
| Y | *172-8508* | 1 | MOUNTING GP-LINES (BANK VALVE) | 530 |
| Y | *186-2950* | 1 | MOUNTING GP-LINES (BACKHOE) | 532 |
| Y | *184-6178* | 1 | STICK GP-HOE | 613 |

Y-SEPARATE ILLUSTRATION

**<END>**

## *240-8688* BACKHOE AR-STANDARD STICK—BOOM, STICK LOCKS

**S/N: BXC1-UP**

**AN ATTACHMENT**

**SMCS-6502, 6504** **i02003543**

| NOTE | PART NUMBER | QTY | PART NAME 1 2 3 4 5 6 (PRODUCT LEVEL) | SEE PAGE |
|---|---|---|---|---|
| Y | **206-0514** | 1 | CYLINDER GP-BACKHOE BUCKET | 372 |
| Y | *183-6058* | 1 | FRAME GP-SWING | 326 |
| Y | *183-8506* | 1 | LINES GP-BACKHOE | 398 |
| Y | *193-0703* | 1 | LINES GP-BUCKET CYLINDER | 441 |
| Y | *186-1594* | 1 | LINES GP-DRAIN | 444 |
| Y | *183-8549* | 1 | LINES GP-LOAD CONTROL VALVE | 451 |
| Y | *175-7618* | 1 | LINES GP-SIDESHIFT LOCK | 489 |
| Y | *175-7877* | 1 | LINK GP-SHIPPING | 593 |
| Y | *151-7928* | 1 | LINKAGE GP-BACKHOE BUCKET | 594 |
| Y | *172-8508* | 1 | MOUNTING GP-LINES (BANK VALVE) | 530 |
| Y | *186-2950* | 1 | MOUNTING GP-LINES (BACKHOE) | 532 |
| Y | *184-6178* | 1 | STICK GP-HOE | 613 |

Y-SEPARATE ILLUSTRATION

**<END>**

# MACHINE ARRANGEMENT

## *240-8693* BACKHOE AR-STANDARD STICK—STANDARD STICK—NARROW FRAME

**S/N: DSX1-UP**

**AN ATTACHMENT**

**SMCS-6502, 6504** **i02003546**

| NOTE | PART NUMBER | QTY | PART NAME 1 2 3 4 5 6 (PRODUCT LEVEL) | SEE PAGE |
|---|---|---|---|---|
| Y | **206-0514** | 1 | CYLINDER GP-BACKHOE BUCKET | 372 |
| Y | *183-6058* | 1 | FRAME GP-SWING | 326 |
| Y | *183-8524* | 1 | LINES GP-BACKHOE | 400 |
| Y | *183-8543* | 1 | LINES GP-BOOM | 440 |
| Y | *193-0703* | 1 | LINES GP-BUCKET CYLINDER | 441 |
| Y | *183-8532* | 1 | LINES GP-SIDESHIFT LOCK | 495 |
| Y | *183-8544* | 1 | LINES GP-STICK | 501 |
| Y | *175-7877* | 1 | LINK GP-SHIPPING | 593 |
| Y | *151-7928* | 1 | LINKAGE GP-BACKHOE BUCKET | 594 |
| Y | *175-7620* | 1 | MOUNTING GP-LINES (BANK VALVE) | 531 |
| Y | *186-2950* | 1 | MOUNTING GP-LINES (BACKHOE) | 532 |
| Y | *184-6178* | 1 | STICK GP-HOE | 613 |

Y-SEPARATE ILLUSTRATION

**<END>**

## *240-8694* BACKHOE AR-STANDARD STICK—STANDARD STICK—BOOM, STICK LOCKS—NARROW FRAME

**S/N: DSX1-UP**

**NARROW FRAME**

**AN ATTACHMENT**

**SMCS-6502, 6504** **i02003547**

| NOTE | PART NUMBER | QTY | PART NAME 1 2 3 4 5 6 (PRODUCT LEVEL) | SEE PAGE |
|---|---|---|---|---|
| Y | **206-0514** | 1 | CYLINDER GP-BACKHOE BUCKET | 372 |
| Y | *183-6058* | 1 | FRAME GP-SWING | 326 |
| Y | *183-8524* | 1 | LINES GP-BACKHOE | 400 |
| Y | *193-0703* | 1 | LINES GP-BUCKET CYLINDER | 441 |
| Y | *186-1593* | 1 | LINES GP-DRAIN | 443 |
| Y | *183-8549* | 1 | LINES GP-LOAD CONTROL VALVE | 451 |
| Y | *183-8532* | 1 | LINES GP-SIDESHIFT LOCK | 495 |
| Y | *175-7877* | 1 | LINK GP-SHIPPING | 593 |
| Y | *151-7928* | 1 | LINKAGE GP-BACKHOE BUCKET | 594 |
| Y | *175-7620* | 1 | MOUNTING GP-LINES (BANK VALVE) | 531 |
| Y | *186-2950* | 1 | MOUNTING GP-LINES (BACKHOE) | 532 |
| Y | *184-6178* | 1 | STICK GP-HOE | 613 |

Y-SEPARATE ILLUSTRATION

**<END>**

# MACHINE ARRANGEMENT

## *240-8695* BACKHOE AR—ONE WAY LINES, NARROW FRAME

**S/N: DSX1-UP**

**AN ATTACHMENT**

**SMCS-6502, 6504** **i01972326**

| NOTE | PART NUMBER | QTY | PART NAME 1 2 3 4 5 6 (PRODUCT LEVEL) | SEE PAGE |
|---|---|---|---|---|
| Y | **206-0514** | 1 | CYLINDER GP-BACKHOE BUCKET | 372 |
| Y | *183-6059* | 1 | FRAME GP-SWING | 329 |
| Y | *235-5862* | 1 | LINES GP-BACKHOE AUXILIARY | 424 |
| Y | *183-8524* | 1 | LINES GP-BACKHOE | 400 |
| Y | *183-8527* | 1 | LINES GP-BACKHOE AUXILIARY | 407 |
| Y | *183-8543* | 1 | LINES GP-BOOM | 440 |
| Y | *193-0703* | 1 | LINES GP-BUCKET CYLINDER | 441 |
| Y | *183-8523* | 1 | LINES GP-SIDESHIFT LOCK | 491 |
| Y | *183-8544* | 1 | LINES GP-STICK | 501 |
| Y | *175-7877* | 1 | LINK GP-SHIPPING | 593 |
| Y | *151-7928* | 1 | LINKAGE GP-BACKHOE BUCKET | 594 |
| Y | *186-2950* | 1 | MOUNTING GP-LINES | 532 |
| Y | *184-6178* | 1 | STICK GP-HOE | 613 |

Y-SEPARATE ILLUSTRATION

**<END>**

## *240-8696* BACKHOE AR—STANDARD STICK—ONE WAY LINES—BOOM, STICK LOCKS—NARROW FRAME

**S/N: DSX1-UP**

**AN ATTACHMENT**

**SMCS-6502, 6504** **i01972328**

| NOTE | PART NUMBER | QTY | PART NAME 1 2 3 4 5 6 (PRODUCT LEVEL) | SEE PAGE |
|---|---|---|---|---|
| Y | **206-0514** | 1 | CYLINDER GP-BACKHOE BUCKET | 372 |
| Y | *183-6059* | 1 | FRAME GP-SWING | 329 |
| Y | *235-5862* | 1 | LINES GP-BACKHOE AUXILIARY | 424 |
| Y | *183-8524* | 1 | LINES GP-BACKHOE | 400 |
| Y | *183-8527* | 1 | LINES GP-BACKHOE AUXILIARY | 407 |
| Y | *193-0703* | 1 | LINES GP-BUCKET CYLINDER | 441 |
| Y | *186-1593* | 1 | LINES GP-DRAIN | 443 |
| Y | *183-8549* | 1 | LINES GP-LOAD CONTROL VALVE | 451 |
| Y | *183-8523* | 1 | LINES GP-SIDESHIFT LOCK | 491 |
| Y | *175-7877* | 1 | LINK GP-SHIPPING | 593 |
| Y | *151-7928* | 1 | LINKAGE GP-BACKHOE BUCKET | 594 |
| Y | *186-2950* | 1 | MOUNTING GP-LINES | 532 |
| Y | *184-6178* | 1 | STICK GP-HOE | 613 |

Y-SEPARATE ILLUSTRATION

**<END>**

# MACHINE ARRANGEMENT

## *240-8697* BACKHOE AR-STANDARD STICK—STANDARD STICK—NARROW FRAME

**S/N: DSX1-UP**

**AN ATTACHMENT**

**SMCS-6502, 6504** **i02003549**

| NOTE | PART NUMBER | QTY | PART NAME 1 2 3 4 5 6 (PRODUCT LEVEL) | SEE PAGE |
|---|---|---|---|---|
| Y | **206-0514** | 1 | CYLINDER GP-BACKHOE BUCKET | 372 |
| Y | *183-6058* | 1 | FRAME GP-SWING | 326 |
| Y | *183-8524* | 1 | LINES GP-BACKHOE | 400 |
| Y | *183-8543* | 1 | LINES GP-BOOM | 440 |
| Y | *193-0703* | 1 | LINES GP-BUCKET CYLINDER | 441 |
| Y | *183-8523* | 1 | LINES GP-SIDESHIFT LOCK | 491 |
| Y | *183-8544* | 1 | LINES GP-STICK | 501 |
| Y | *175-7877* | 1 | LINK GP-SHIPPING | 593 |
| Y | *151-7928* | 1 | LINKAGE GP-BACKHOE BUCKET | 594 |
| Y | *172-8508* | 1 | MOUNTING GP-LINES (BANK VALVE) | 530 |
| Y | *186-2950* | 1 | MOUNTING GP-LINES (BACKHOE) | 532 |
| Y | *184-6178* | 1 | STICK GP-HOE | 613 |

Y-SEPARATE ILLUSTRATION

**<END>**

## *240-8698* BACKHOE AR-STANDARD STICK—STANDARD STICK—BOOM, STICK LOCKS—NARROW FRAME

**S/N: DSX1-UP**

**NARROW FRAME**

**AN ATTACHMENT**

**SMCS-6502, 6504** **i02003552**

| NOTE | PART NUMBER | QTY | PART NAME 1 2 3 4 5 6 (PRODUCT LEVEL) | SEE PAGE |
|---|---|---|---|---|
| Y | **206-0514** | 1 | CYLINDER GP-BACKHOE BUCKET | 372 |
| Y | *183-6058* | 1 | FRAME GP-SWING | 326 |
| Y | *183-8524* | 1 | LINES GP-BACKHOE | 400 |
| Y | *193-0703* | 1 | LINES GP-BUCKET CYLINDER | 441 |
| Y | *186-1593* | 1 | LINES GP-DRAIN | 443 |
| Y | *183-8549* | 1 | LINES GP-LOAD CONTROL VALVE | 451 |
| Y | *183-8523* | 1 | LINES GP-SIDESHIFT LOCK | 491 |
| Y | *175-7877* | 1 | LINK GP-SHIPPING | 593 |
| Y | *151-7928* | 1 | LINKAGE GP-BACKHOE BUCKET | 594 |
| Y | *172-8508* | 1 | MOUNTING GP-LINES (BANK VALVE) | 530 |
| Y | *186-2950* | 1 | MOUNTING GP-LINES (BACK HOE) | 532 |
| Y | *184-6178* | 1 | STICK GP-HOE | 613 |

Y-SEPARATE ILLUSTRATION

**<END>**

# MACHINE ARRANGEMENT

## *237-9288* CHASSIS AR—STANDARD FRAME

**S/N: BXC1-UP**

**PART OF 214-6993 COMMON AR**

**SMCS-7000** **i01994197**

| NOTE | PART NUMBER | QTY | PART NAME 1 2 3 4 5 6 (PRODUCT LEVEL) | SEE PAGE |
|---|---|---|---|---|
| Y | *234-8892* | 1 | CONTROL GP-GOV & ACCELERATOR | 86 |
| Y | *183-3130* | 1 | CONTROL GP-HYDRAULIC HAND | 359 |
| Y | *185-0080* | 1 | FLOORPLATE GP | 320 |
| Y | *236-2070* | 1 | FRAME GP-LOADER | 322 |
| Y | *185-8857* | 1 | FRAME GP-SLIDING | 324 |
| Y | *9R-9999* | 1 | GUARD GP-LINES | 334 |
| Y | *241-3406* | 1 | HOOD & GUARD GP | 336 |
| Y | *188-9097* | 1 | LINES GP-PILOT | 474 |
| Y | *183-6076* | 1 | LOCK GP-TRANSPORT | 603 |
| Y | *185-7741* | 1 | PLATE & FILM GP | 804 |
| Y | *238-6700* | 1 | PLATE & FILM GP | 805 |
| Y | *126-5707* | 1 | STABILIZER GP-BACKHOE | 606 |
| Y | *214-6908* | 1 | TANK & MTG GP-FUEL | 100 |
| Y | *238-1165* | 1 | WIRING GP-CONSOLE | 183 |
| Y | *242-8521* | 1 | WIRING GP-PLATFORM | 198 |
| Y | *185-8807* | 1 | WIRING GP-REAR | 203 |

Y-SEPARATE ILLUSTRATION

**<END>**

## *237-9289* CHASSIS AR—NARROW FRAME

**S/N: DSX1-UP**

**PART OF 214-6994 COMMON AR**

**SMCS-7000** **i01982477**

| NOTE | PART NUMBER | QTY | PART NAME 1 2 3 4 5 6 (PRODUCT LEVEL) | SEE PAGE |
|---|---|---|---|---|
| Y | *234-8892* | 1 | CONTROL GP-GOV & ACCELERATOR | 86 |
| Y | *183-3130* | 1 | CONTROL GP-HYDRAULIC HAND | 359 |
| Y | *185-0080* | 1 | FLOORPLATE GP | 320 |
| Y | *236-2072* | 1 | FRAME GP-LOADER | 323 |
| Y | *185-8857* | 1 | FRAME GP-SLIDING | 324 |
| Y | *183-1276* | 1 | GUARD GP-LINES | 335 |
| Y | *241-3406* | 1 | HOOD & GUARD GP | 336 |
| Y | *188-9097* | 1 | LINES GP-PILOT | 474 |
| Y | *183-6076* | 1 | LOCK GP-TRANSPORT | 603 |
| Y | *185-7754* | 1 | PLATE & FILM GP | 805 |
| Y | *238-6700* | 1 | PLATE & FILM GP | 805 |
| Y | *126-5707* | 1 | STABILIZER GP-BACKHOE | 606 |
| Y | *214-6908* | 1 | TANK & MTG GP-FUEL | 100 |
| Y | *238-1165* | 1 | WIRING GP-CONSOLE | 183 |
| Y | *242-8521* | 1 | WIRING GP-PLATFORM | 198 |
| Y | *185-8807* | 1 | WIRING GP-REAR | 203 |

Y-SEPARATE ILLUSTRATION

**<END>**

# MACHINE ARRANGEMENT

## *214-6993* COMMON AR

**S/N: BXC1-UP**

**SMCS-7000** **i01961712**

| NOTE | PART NUMBER | QTY | PART NAME 1 2 3 4 5 6 (PRODUCT LEVEL) | SEE PAGE |
|---|---|---|---|---|
| Y | *185-1932* | 1 | BOOM GP | 589 |
| Y | *237-9288* | 1 | CHASSIS AR | 15 |
| Y | *237-6463* | 1 | DRIVE AR-BACKHOE LOADER (AWD/2WS) | 230 |
| Y | *237-9297* | 1 | HYDRUALIC AR | 396 |
| Y | *112-1827* | 1 | LOADER AR | 597 |
| Y | *184-7970* | 1 | POWER TRAIN AR | 239 |

Y-SEPARATE ILLUSTRATION

**<END>**

## *214-6994* COMMON AR

**S/N: DSX1-UP**

**SMCS-7000** **i01961713**

| NOTE | PART NUMBER | QTY | PART NAME 1 2 3 4 5 6 (PRODUCT LEVEL) | SEE PAGE |
|---|---|---|---|---|
| Y | *185-1932* | 1 | BOOM GP | 589 |
| Y | *237-9289* | 1 | CHASSIS AR | 15 |
| Y | *237-6463* | 1 | DRIVE AR-BACKHOE LOADER (AWD/2WS) | 230 |
| Y | *237-9298* | 1 | HYDRUALIC AR | 397 |
| Y | *112-1827* | 1 | LOADER AR | 597 |
| Y | *184-7970* | 1 | POWER TRAIN AR | 239 |

Y-SEPARATE ILLUSTRATION

**<END>**

## *123-4202* CONVERSION AR-CERTIFICATION

**S/N: BXC1-UP; DSX1-UP**

**AN ATTACHMENT**

**SMCS-7000** **i01505526**

| NOTE | PART NUMBER | QTY | PART NAME 1 2 3 4 5 6 (PRODUCT LEVEL) | SEE PAGE |
|---|---|---|---|---|
| Y | *110-6017* | 1 | MOUNTING GP-REGISTRATION | 343 |
| | **196-4096** | 1 | RADIO GP-AM/FM CASSETTE | |

Y-SEPARATE ILLUSTRATION

**<END>**

# MACHINE ARRANGEMENT

## *190-2802* CONVERSION AR-CERTIFICATION—SIDESHIFT—MECHANICAL LOADER

**S/N: BXC1-UP; DSX1-UP**

**AN ATTACHMENT**

**SMCS-7000** **i01484545**

| NOTE | PART NUMBER | QTY | PART NAME 1 2 3 4 5 6 (PRODUCT LEVEL) | SEE PAGE |
|---|---|---|---|---|
| Y | *193-2342* | 1 | HORN GP-ELECTRIC | 745 |
| Y | **189-3823** | 2 | LOCK GP-HYDRAULIC FOOT CONTROL | 523 |
| Y | *106-2404* | 1 | LOCK GP-HYDRAULIC HAND CONTROL | 524 |
| Y | *113-0081* | 1 | LOCK GP-STABILIZER LEG | 598 |
| Y | *152-0184* | 1 | REFLECTOR GP | 344 |
| Y | *190-7557* | 1 | WIRING GP-POWER RECEPTACLE | 202 |
| Y-SEPARATE ILLUSTRATION | | | | |

**<END>**

## *190-2803* CONVERSION AR-CERTIFICATION

**S/N: BXC1-UP; DSX1-UP**

**ITALY**

**AN ATTACHMENT**

**SMCS-7000** **i01998419**

| NOTE | PART NUMBER | QTY | PART NAME 1 2 3 4 5 6 (PRODUCT LEVEL) | SEE PAGE |
|---|---|---|---|---|
| | *125-2632* | 1 | COVER GP-SWITCH | |
| | **114-3421** | 1 | COVER AS | |
| Y | *206-3407* | 1 | GUARD GP-BUCKET (FRONT) | 688 |
| Y | *113-0020* | 1 | GUARD GP-LIGHTING | 332 |
| Y | *186-2737* | 1 | LIGHTING GP-WARNING | 161 |
| | **206-3411** | 1 | LOCK AS | |
| Y | *121-9797* | 1 | LOCK GP-TRANSPORT (LOADER) | 599 |
| Y | *177-4727* | 1 | LOCK GP-TRANSPORT (BACKHOE) | 602 |
| Y | *101-4447* | 1 | MOUNTING GP-REGISTRATION | 342 |
| | *190-1288* | 1 | PLATE GP | |
| | **8T-9530** | 4 | TACK-FASTENER | |
| | **159-7342** | 1 | PLATE-IDENTIFICATION | |
| | **170-3492** | 1 | FILM-INSTRUCTION (PARKING BRAKE) | |
| Y-SEPARATE ILLUSTRATION | | | | |

**<END>**

# MACHINE ARRANGEMENT

## *190-6413* CONVERSION AR-CERTIFICATION—EXTENDABLE STICK

**S/N: BXC1-UP; DSX1-UP**
**ITALY**
**AN ATTACHMENT**

**SMCS-7000** **i01998417**

| NOTE | PART NUMBER | QTY | PART NAME 1 2 3 4 5 6 (PRODUCT LEVEL) | SEE PAGE |
|---|---|---|---|---|
| | *125-2632* | 1 | COVER GP-SWITCH | |
| | **114-3421** | 1 | COVER AS | |
| Y | *206-3407* | 1 | GUARD GP-BUCKET (FRONT) | 688 |
| | **101-4415** | 1 | FILM | |
| Y | *113-0020* | 1 | GUARD GP-LIGHTING | 332 |
| Y | *186-2737* | 1 | LIGHTING GP-WARNING | 161 |
| | **206-3411** | 1 | LOCK AS | |
| Y | *121-9797* | 1 | LOCK GP-TRANSPORT (LOADER) | 599 |
| Y | *177-4726* | 1 | LOCK GP-TRANSPORT (BACKHOE) | 601 |
| Y | *101-4447* | 1 | MOUNTING GP-REGISTRATION | 342 |
| Y | *101-4419* | 3 | PLATE AS-SIDE REFLECTIVE | 809 |
| | *190-1288* | 1 | PLATE GP | |
| | **8T-9530** | 4 | TACK-FASTENER | |
| | **159-7342** | 1 | PLATE-IDENTIFICATION | |
| | **170-3492** | 1 | FILM-INSTRUCTION (PARKING BRAKE) | |

Y-SEPARATE ILLUSTRATION

**<END>**

## *206-3409* CONVERSION AR-CERTIFICATION—AUTOSHIFT

**S/N: BXC1-UP; DSX1-UP**
**AN ATTACHMENT**

**SMCS-7000** **i02011517**

| NOTE | PART NUMBER | QTY | PART NAME 1 2 3 4 5 6 (PRODUCT LEVEL) | SEE PAGE |
|---|---|---|---|---|
| Y | *204-5261* | 1 | GUARD GP-BUCKET (FRONT) | 687 |
| Y | *113-0018* | 1 | INSTALLATION AR-WHEEL CHOCK | 801 |
| | *190-1289* | 1 | PLATE & FILM GP | |
| | **8T-9530** | 4 | TACK-FASTENER | |
| | **106-0827** | 4 | FILM (20 KM/HR) | |
| | **131-6010** | 1 | FILM-INSTRUCTION (WHEEL CHOCK) | |
| | **159-7342** | 1 | PLATE-IDENTIFICATION | |
| | **133-8877** | 1 | TOOL GP-HAND | |

Y-SEPARATE ILLUSTRATION

**<END>**

# MACHINE ARRANGEMENT

## *206-4924* CONVERSION AR-CERTIFICATION—STANDARD SHIFT

**S/N: BXC1-UP; DSX1-UP**

**AN ATTACHMENT**

**SMCS-7000** **i01889398**

| NOTE | PART NUMBER | QTY | PART NAME 1 2 3 4 5 6 (PRODUCT LEVEL) | SEE PAGE |
|---|---|---|---|---|
| Y | *204-5261* | 1 | GUARD GP-BUCKET (FRONT) | 687 |
| Y | *113-0018* | 1 | INSTALLATION AR-WHEEL CHOCK | 801 |
| Y | *130-8149* | 1 | LOCKOUT GP-FOURTH GEAR | 236 |
| | *190-1289* | 1 | PLATE & FILM GP | |
| | **8T-9530** | 4 | TACK-FASTENER | |
| | **106-0827** | 4 | FILM (20 KM/HR) | |
| | **131-6010** | 1 | FILM-INSTRUCTION (WHEEL CHOCK) | |
| | **159-7342** | 1 | PLATE-IDENTIFICATION | |
| | **034-1432** | 4 | STRAP-CABLE | |
| | **133-8877** | 1 | TOOL GP-HAND | |

Y-SEPARATE ILLUSTRATION

**<END>**

# ENGINE ARRANGEMENT

## *214-6891* ENGINE AR

**S/N: DSX1-UP**

**AN ATTACHMENT**

**SMCS-1000** **i02003067**

| NOTE | PART NUMBER | QTY | PART NAME 1 2 3 4 5 6 (PRODUCT LEVEL) | SEE PAGE |
|---|---|---|---|---|
| Y | *234-1979* | 1 | AIR CLEANER GP | 73 |
| Y | **234-3059** | 1 | ENGINE AR-PRIMARY | 22 |
| Y | *236-2486* | 1 | EXTENSION GP-EXHAUST | 77 |
| Y | *234-7510* | 1 | FILLER GP-ENGINE OIL | 51 |
| Y | **238-9828** | 1 | INDICATOR GP-AIR FILTER CHANGE | 78 |
| Y | *235-2972* | 1 | LINES GP-FUEL | 90 |
| Y | *235-3420* | 1 | MUFFLER GP | 83 |
| Y | *235-3170* | 1 | SEPARATOR GP-WATER | 99 |
| Y | *234-1991* | 1 | WIRING GP-ENGINE | 189 |

Y-SEPARATE ILLUSTRATION

# ENGINE ARRANGEMENT

## *214-6893* ENGINE AR

**S/N: BXC1-UP; DSX1-UP**

**AN ATTACHMENT**

**SMCS-1000** **i01998369**

| NOTE | PART NUMBER | QTY | PART NAME 1 2 3 4 5 6 (PRODUCT LEVEL) | SEE PAGE |
|---|---|---|---|---|
| Y | *234-1979* | 1 | AIR CLEANER GP | 73 |
| Y | *234-3061* | 1 | ENGINE AR-PRIMARY | 23 |
| Y | *236-2486* | 1 | EXTENSION GP-EXHAUST | 77 |
| Y | *234-7510* | 1 | FILLER GP-ENGINE OIL | 51 |
| Y | *235-2972* | 1 | LINES GP-FUEL | 90 |
| Y | *235-3420* | 1 | MUFFLER GP | 83 |
| Y | *235-3170* | 1 | SEPARATOR GP-WATER | 99 |
| Y | *234-1991* | 1 | WIRING GP-ENGINE | 189 |

Y-SEPARATE ILLUSTRATION

# ENGINE ARRANGEMENT

## 234-3059 ENGINE AR-PRIMARY

**S/N: CRS1-UP**
**62 BRAKE KW (84 BHP) AT 2200 RPM**
**PART OF 214-6891 ENGINE AR**
**AN ATTACHMENT**

**SMCS-1000** **i02003222**

| NOTE | PART NUMBER | QTY | PART NAME 1 2 3 4 5 6 (PRODUCT LEVEL) | SEE PAGE |
|---|---|---|---|---|
| Y | *237-0027* | 1 | ALTERNATOR GP-CHARGING | 103 |
| Y | *232-7528* | 1 | CAMSHAFT GP | 24 |
| Y | *231-0033* | 1 | CONNECTION GP-WATER | 53 |
| Y | *232-6177* | 1 | COOLER GP-FLTR BASE & ENG OIL | 54 |
| Y | *231-0149* | 1 | COVER GP-AIR INLET | 76 |
| Y | *246-2582* | 1 | COVER GP-VALVE MECHANISM | 25 |
| Y | *232-7439* | 1 | CRANKSHAFT GP | 27 |
| Y | *232-7606* | 1 | CYLINDER BLOCK GP | 31 |
| Y | *232-7524* | 1 | CYLINDER HEAD GP | 33 |
| Y | *236-8241* | 1 | DRIVE GP-FAN | 34 |
| Y | *230-7300* | 1 | FLYWHEEL GP | 35 |
| Y | *232-6661* | 1 | GLOW PLUG GP | 113 |
| Y | *236-8238* | 1 | HOUSING GP-FLYWHEEL | 36 |
| Y | *232-3670* | 1 | HOUSING GP-FRONT | 37 |
| Y | *233-7432* | 1 | LIFTING GP-ENGINE | 39 |
| Y | *237-3658* | 1 | MOUNTING GP-ENGINE | 40 |
| Y | *237-0025* | 1 | PAN GP-OIL | 43 |
| Y | *232-7442* | 1 | PISTON & ROD GP | 45 |
| Y | *225-4317* | 1 | PLUG GP-ENGINE | 47 |
| Y | *230-7569* | 1 | PLUG GP-ENGINE | 48 |
| Y | *230-7353* | 1 | PULLEY GP-CRANKSHAFT | 49 |
| Y | *230-7578* | 1 | PUMP GP-ENGINE OIL | 52 |
| Y | *237-2528* | 1 | PUMP GP-FUEL INJECTION | 96 |
| Y | *230-7355* | 1 | PUMP GP-WATER | 63 |
| Y | *237-0024* | 1 | STARTING MOTOR GP-ELECTRIC | 168 |
| Y | *237-4896* | 1 | SWITCH GP-PRESSURE | 169 |
| Y | *235-8749* | 1 | SWITCH GP-TEMPERATURE | 170 |
| Y | *237-3924* | 1 | TURBOCHARGER GP | 84 |
| Y | *232-7526* | 1 | VALVE MECHANISM GP | 50 |
| | | | AVAILABLE GASKET KIT(S): | |
| | **239-9897** | 1 | KIT-GASKET (TOP) | |
| | **235-3556** | 1 | KIT-GASKET (BOTTOM) | |

Y-SEPARATE ILLUSTRATION

# ENGINE ARRANGEMENT

## *234-3061* ENGINE AR-PRIMARY

**S/N: CRS1-UP**
**75 BRAKE KW (100 BHP) AT 2200 RPM**
**PART OF 214-6893 ENGINE AR**
**AN ATTACHMENT**

**SMCS-1000** **i02002378**

| NOTE | PART NUMBER | QTY | PART NAME 1 2 3 4 5 6 (PRODUCT LEVEL) | SEE PAGE |
|---|---|---|---|---|
| Y | *237-0027* | 1 | ALTERNATOR GP-CHARGING | 103 |
| Y | *232-7528* | 1 | CAMSHAFT GP | 24 |
| Y | *231-0033* | 1 | CONNECTION GP-WATER | 53 |
| Y | *232-6177* | 1 | COOLER GP-FLTR BASE & ENG OIL | 54 |
| Y | *231-0149* | 1 | COVER GP-AIR INLET | 76 |
| Y | *246-2582* | 1 | COVER GP-VALVE MECHANISM | 25 |
| Y | *232-7439* | 1 | CRANKSHAFT GP | 27 |
| Y | *232-7606* | 1 | CYLINDER BLOCK GP | 31 |
| Y | *232-7524* | 1 | CYLINDER HEAD GP | 33 |
| Y | *236-8241* | 1 | DRIVE GP-FAN | 34 |
| Y | *233-9417* | 1 | FILTER GP-FUEL | 88 |
| Y | *230-7300* | 1 | FLYWHEEL GP | 35 |
| Y | *232-6661* | 1 | GLOW PLUG GP | 113 |
| Y | *236-8238* | 1 | HOUSING GP-FLYWHEEL | 36 |
| Y | *232-3670* | 1 | HOUSING GP-FRONT | 37 |
| Y | *233-7432* | 1 | LIFTING GP-ENGINE | 39 |
| Y | *237-3658* | 1 | MOUNTING GP-ENGINE | 40 |
| Y | *237-0025* | 1 | PAN GP-OIL | 43 |
| Y | *232-7442* | 1 | PISTON & ROD GP | 45 |
| Y | *225-4317* | 1 | PLUG GP-ENGINE | 47 |
| Y | *230-7569* | 1 | PLUG GP-ENGINE | 48 |
| Y | *230-7353* | 1 | PULLEY GP-CRANKSHAFT | 49 |
| Y | *230-7578* | 1 | PUMP GP-ENGINE OIL | 52 |
| Y | *236-8229* | 1 | PUMP GP-FUEL INJECTION | 93 |
| Y | *230-7355* | 1 | PUMP GP-WATER | 63 |
| Y | *237-0024* | 1 | STARTING MOTOR GP-ELECTRIC | 168 |
| Y | *237-4896* | 1 | SWITCH GP-PRESSURE | 169 |
| Y | *235-8749* | 1 | SWITCH GP-TEMPERATURE | 170 |
| Y | *237-3924* | 1 | TURBOCHARGER GP | 84 |
| Y | *232-7526* | 1 | VALVE MECHANISM GP | 50 |
| | | | AVAILABLE GASKET KIT(S): | |
| | **239-9897** | 1 | KIT-GASKET | |
| | **235-3556** | 1 | KIT-GASKET | |

Y-SEPARATE ILLUSTRATION

# BASIC ENGINE

## *232-7528* CAMSHAFT GP

**S/N: CRS1-UP**

**PART OF 234-3059, 234-3061 ENGINE AR-PRIMARY**

**AN ATTACHMENT**

**SMCS-1210, 1211, 1212** **i01998661**

| NOTE | REF NO | GRAPHIC REF | PART NUMBER | QTY | PART NAME 1 2 3 4 5 6 (PRODUCT LEVEL) | SEE PAGE |
|---|---|---|---|---|---|---|
| | 1 | 1 | **1B-8736** | 1 | KEY-WOODRUFF | |
| | 2 | 1 | **225-5967** | 1 | CAMSHAFT | |

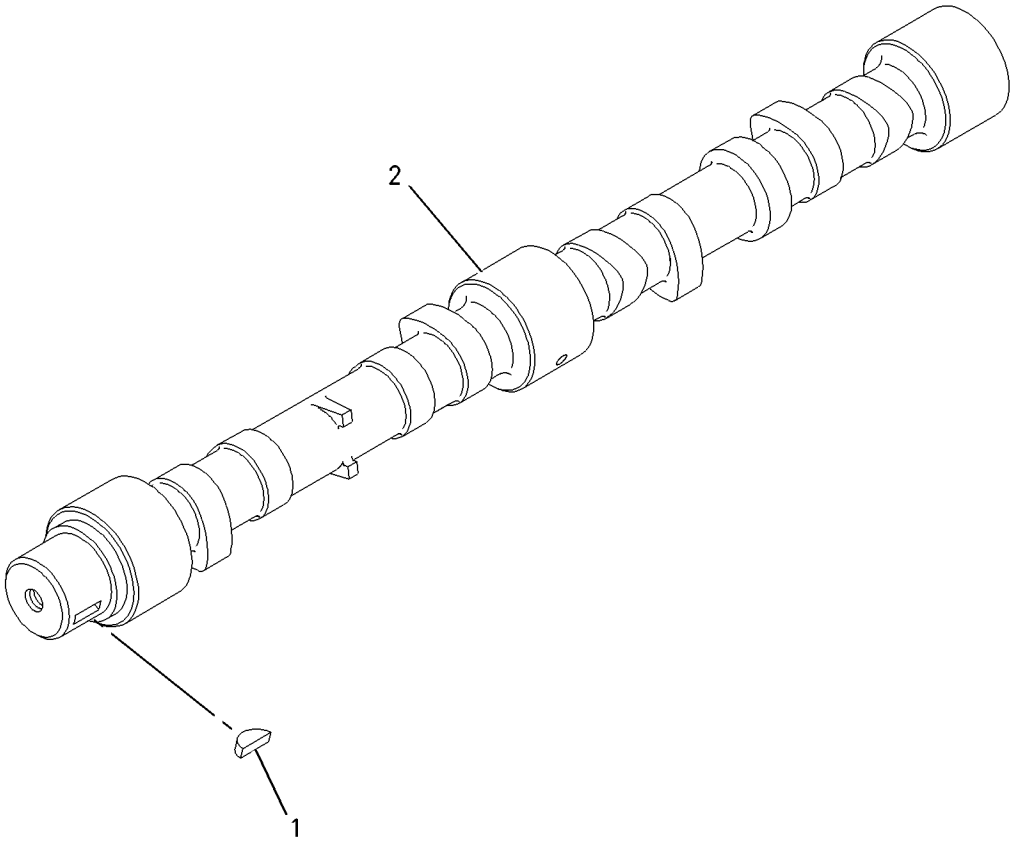


GRAPHIC #1 **<END>** g00911297

# *246-2582* COVER GP-VALVE MECHANISM

**S/N: CRS1-UP**

**PART OF 234-3059, 234-3061 ENGINE AR-PRIMARY**

**AN ATTACHMENT**

**SMCS-1107, 1120** **i02002647**

| NOTE | REF NO | GRAPHIC REF | PART NUMBER | QTY | PART NAME 1 2 3 4 5 6 (PRODUCT LEVEL) | SEE PAGE |
|---|---|---|---|---|---|---|
| | 1 | 1 | **6I-0260** | 2 | BOLT (M8X1.25X25MM) | |
| | 2 | 1 | **6I-0846** | 3 | BOLT (M6X1.0X14MM) | |
| | 3 | 1 | **6I-0917** | 1 | BOLT (M6X1.0X25MM) | |
| | 4 | 1 | **7C-1281** | 1 | BRACKET | |
| | 5 | 1 | **100-4841** | 2 | BOLT (M6X1.0X10MM) | |
| | 6 | 1 | **5D-1026** | 1 | CLAMP-HOSE | |
| | 7 | 1 | **162-1565** | 1 | SPRING (BREATHER HOSE) | |
| | 8 | 1 | **198-8645** | 1 | HOSE (BREATHER) | |
| | 9 | 1 | **225-6522** | 1 | PLUG-CUP | |
| | 10 | 1 | **230-9127** | 1 | COVER | |
| | 11 | 1 | **230-9144** | 1 | CONNECTOR | |
| | 11A | 1 | **150-7732** | 1 | SEAL-O-RING | |
| | 11B | 1 | **225-6455** | 2 | BOLT | |
| | 11C | 1 | **225-6517** | 1 | GASKET | |
| | 12 | 1 | **237-0769** | 1 | SHIELD-HEAT | |
| | 13 | 1 | **246-1163** | 1 | FILLER AS-OIL | |
| | 13A | 1 | **229-4896** | 1 | SEAL-O-RING | |

*246-2582* **COVER GP-VALVE MECHANISM** *(contd. )* **i02002647**

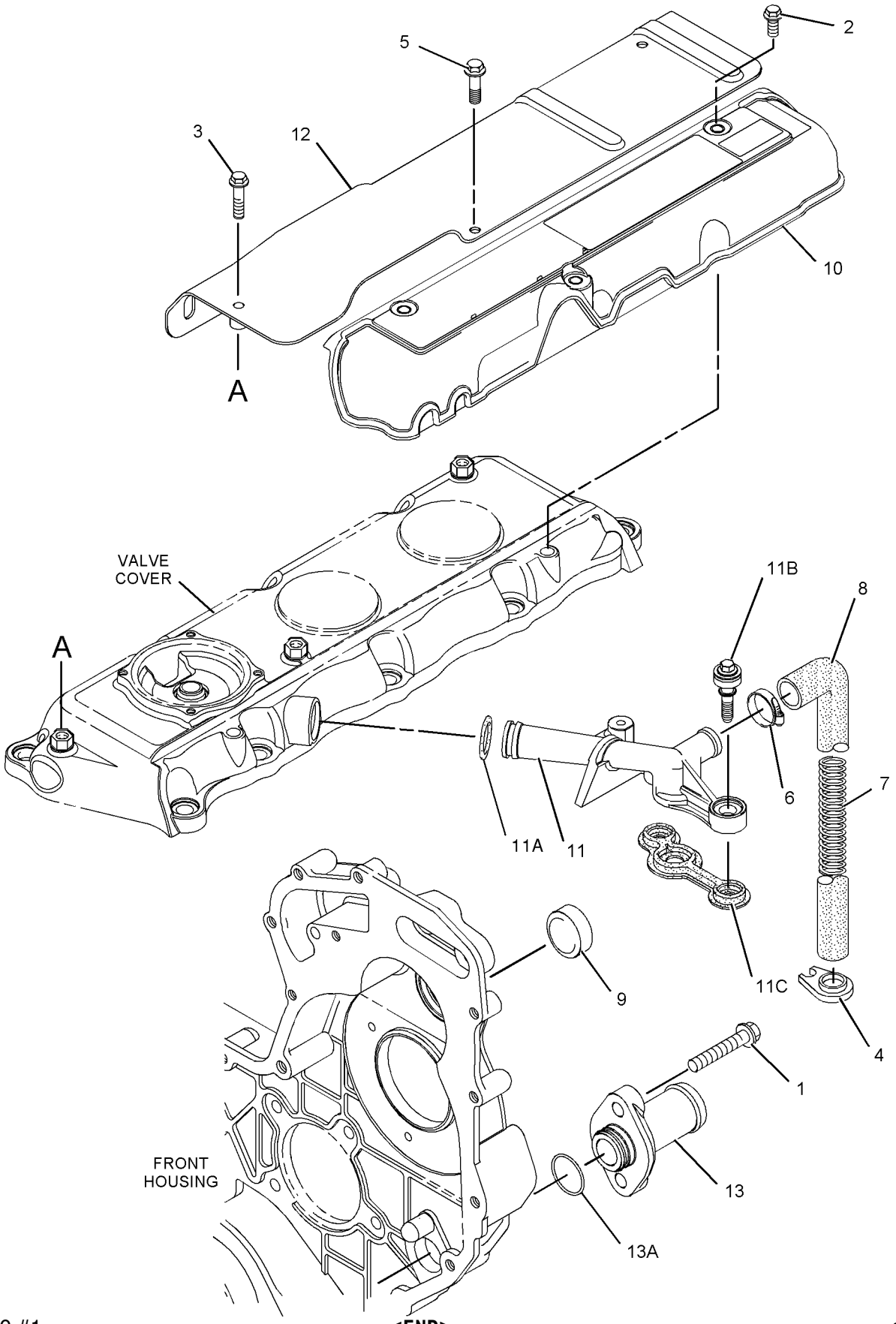


GRAPHIC #1 **<END>** g01039843

# BASIC ENGINE

## *232-7439* CRANKSHAFT GP

**S/N: CRS1-UP**

**PART OF 234-3059, 234-3061 ENGINE AR-PRIMARY**

**AN ATTACHMENT**

**SMCS-1202, 1203, 1204, 1230, 1231, 1232** **i01998651**

| NOTE | REF NO | GRAPHIC REF | PART NUMBER | QTY | PART NAME 1 2 3 4 5 6 (PRODUCT LEVEL) | SEE PAGE |
|---|---|---|---|---|---|---|
| | 1 | 1 | **1B-8736** | 1 | KEY-WOODRUFF | |
| | 2 | 1 | **216-8314** | 1 | GEAR-CRANKSHAFT (34 TEETH) | |
| | 3 | 1 | **232-7400** | 1 | CRANKSHAFT GP | |
| B | 4 | 1 | **225-7772** | 1 | BEARING SET-MAIN | |
| B | | 1 | **233-3784** | 1 | KIT-CRANKSHAFT BEARING (.25MM US) | |
| B | | 1 | **233-3785** | 1 | KIT-CRANKSHAFT BEARING (.50MM US) | |
| B | | 1 | **233-3786** | 1 | KIT-CRANKSHAFT BEARING (.76MM US) | |
| B | 5 | 1 | **225-7781** | 1 | BEARING SET-ROD (STANDARD) | |
| B | | 1 | **233-3788** | 1 | KIT-ROD BEARING (.25MM US) | |
| B | | 1 | **233-3789** | 1 | KIT-ROD BEARING (.50MM US) | |
| B | | 1 | **233-3790** | 1 | KIT-ROD BEARING (.76MM US) | |
| B | 6 | 1 | **032-9090** | 2 | WASHER-THRUST (STANDARD-UPPER) | |
| B | | 1 | **067-6873** | 2 | WASHER-THRUST (.18MM OS) | |
| B | 7 | 1 | **032-9091** | 2 | WASHER-THRUST (STANDARD-LOWER) | |
| B | | 1 | **067-6874** | 2 | WASHER-THRUST (.18MM OS) | |

B-USE AS REQUIRED

*232-7439* **CRANKSHAFT GP** *(contd.)* **i01998651**

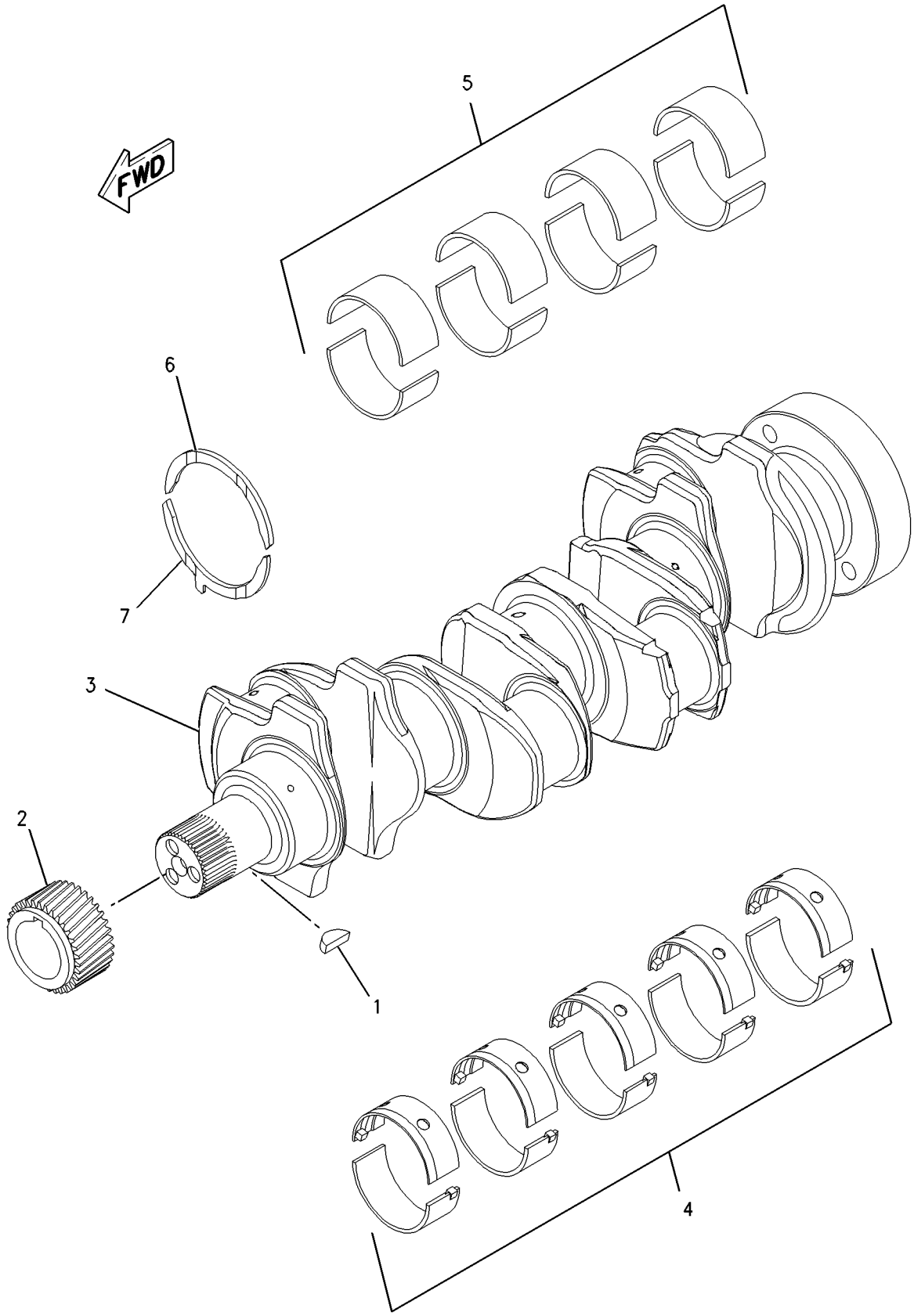


GRAPHIC #1 **<END>** g00950782

# BASIC ENGINE

## *232-7604* CYLINDER BLOCK GP

**S/N: CRS1-UP**

**PART OF 232-7606 CYLINDER BLOCK GP**

**AN ATTACHMENT**

**SMCS-1201** **i01887247**

| NOTE | REF NO | GRAPHIC REF | PART NUMBER | QTY | PART NAME 1 2 3 4 5 6 (PRODUCT LEVEL) | SEE PAGE |
|---|---|---|---|---|---|---|
| | 1 | 1 | **6I-0572** | 4 | BOLT (M8X1.25.20MM) | |
| | 2 | 1 | **035-8068** | 10 | BOLT | |
| | 3 | 1 | **067-6002** | 10 | DOWEL | |
| | 4 | 1 | **067-6006** | 1 | PLUG | |
| | 5 | 1 | **067-6043** | 1 | PLUG-SIDE | |
| | 6 | 1 | **100-4841** | 4 | BOLT (M6X1.0X10MM) | |
| | 7 | 1 | **185-0884** | 2 | DOWEL | |
| | 8 | 1 | **225-7944** | 1 | GASKET | |
| | 9 | 1 | **225-8858** | 2 | PLUG | |
| | 10 | 1 | **232-3751** | 1 | PLATE-BLANKING | |
| | 11 | 1 | **232-7440** | 1 | BEARING | |
| | 12 | 1 | **232-7454** | 4 | JET AS-PISTON COOLING | |
| | 13 | 1 | **232-7596** | 1 | PLUG | |
| | 14 | 1 | **232-7597** | 2 | PLUG | |
| | 15 | 1 | **232-7599** | 1 | PLUG | |
| | 16 | 1 | **232-7600** | 1 | PLUG-CUP | |
| | 17 | 1 | **232-7603** | 1 | PLUG | |

*232-7604* **CYLINDER BLOCK GP** *(contd.)* **i01887247**

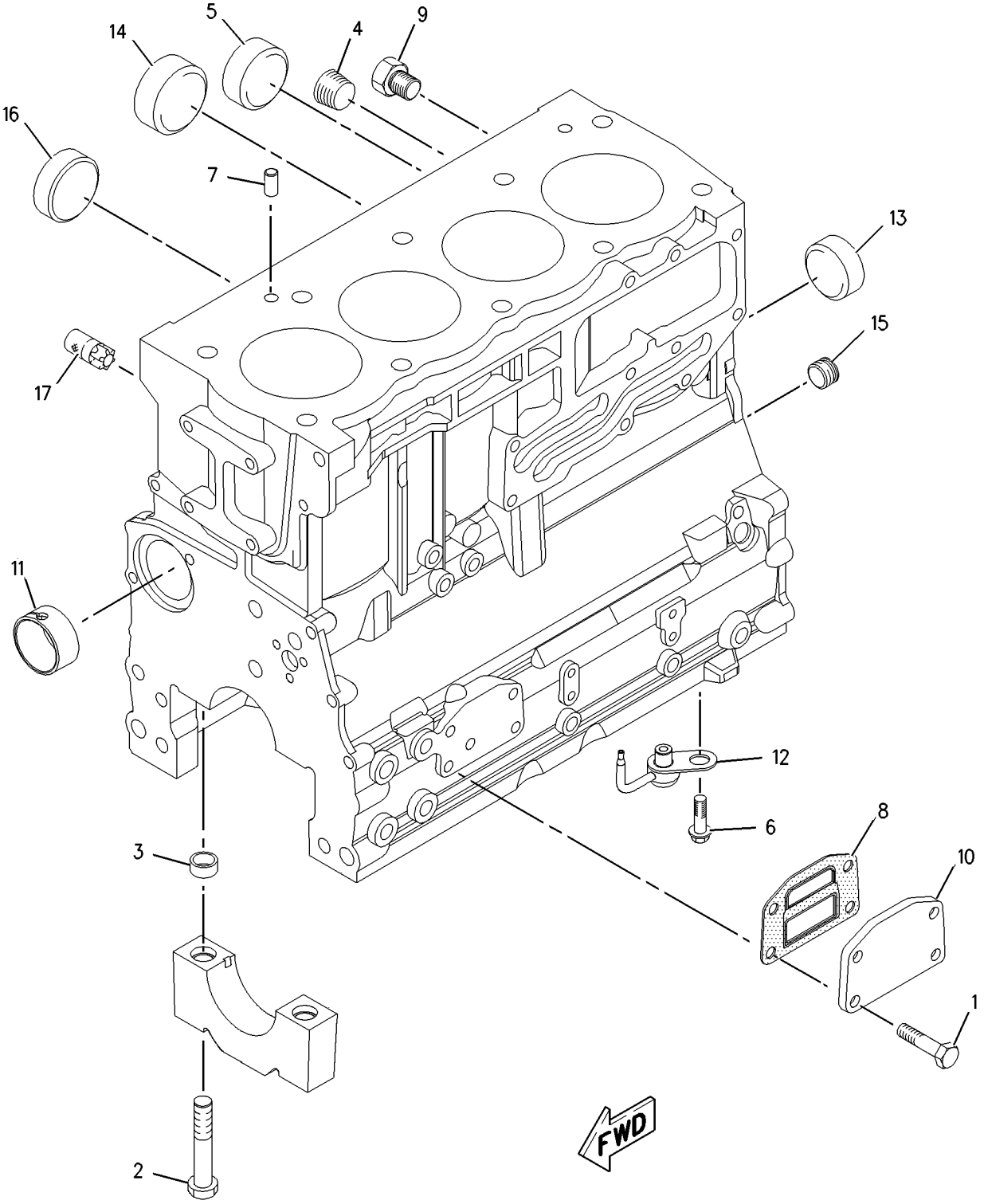


GRAPHIC #1 **<END>** g00951214

# BASIC ENGINE

## *232-7606* CYLINDER BLOCK GP

**S/N: CRS1-UP**

**PART OF 234-3059, 234-3061 ENGINE AR-PRIMARY**

**AN ATTACHMENT**

**SMCS-1201** **i01998679**

| NOTE | REF NO | GRAPHIC REF | PART NUMBER | QTY | PART NAME 1 2 3 4 5 6 (PRODUCT LEVEL) | SEE PAGE |
|---|---|---|---|---|---|---|
| | 1 | 1 | **209-9219** | 10 | BOLT (M8X1.25X16MM) | |
| | 2 | 1 | **232-7449** | 1 | HOUSING AS | |
| Y | 3 | 1 | **232-7604** | 1 | CYLINDER BLOCK GP | 29 |

Y-SEPARATE ILLUSTRATION

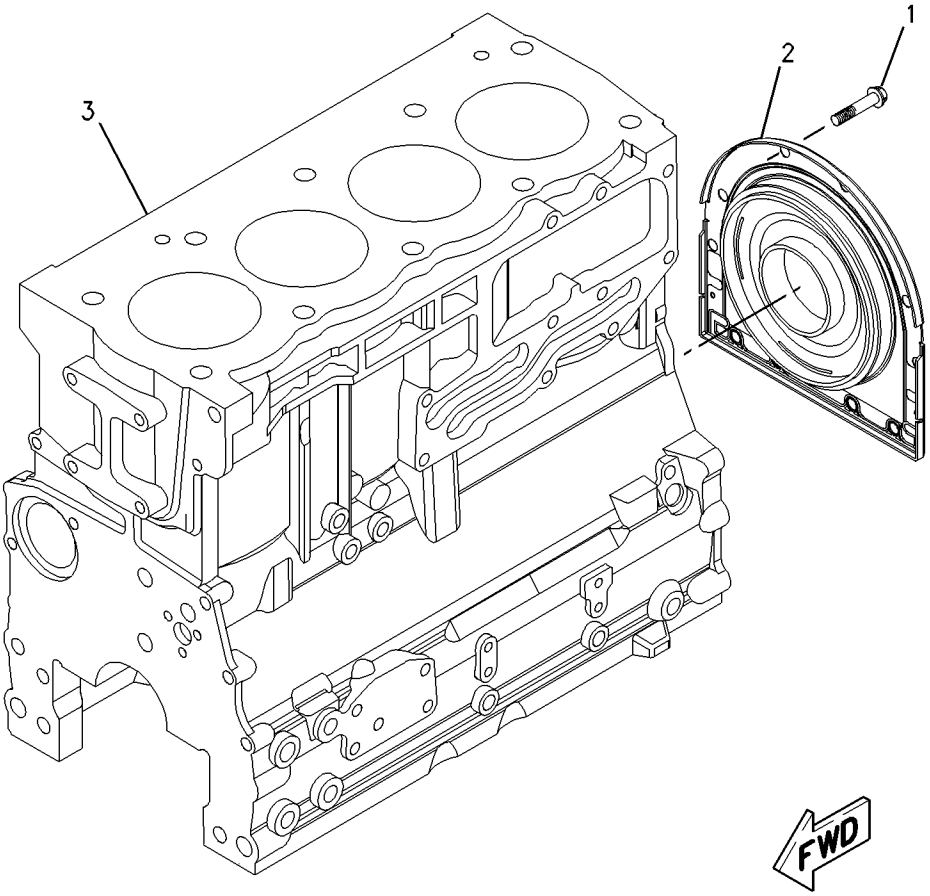


GRAPHIC #1 **<END>** g00952056

# BASIC ENGINE

## *232-7519* CYLINDER HEAD GP

**S/N: CRS1-UP**
**PART OF 232-7524 CYLINDER HEAD GP**
**AN ATTACHMENT**

**SMCS-1100, 1101, 1103, 1104, 1105, 1106, 1108, 1109, 1115, 1117, 1121, 1124, 1125** **i02005443**

| NOTE | REF NO | GRAPHIC REF | PART NUMBER | QTY | PART NAME 1 2 3 4 5 6 (PRODUCT LEVEL) | SEE PAGE |
|---|---|---|---|---|---|---|
| | 1 | 1 | **2B-0858** | 1 | PLUG-PIPE | |
| | 2 | 1 | **9Y-5015** | 2 | PLUG-FREEZE | |
| | 3 | 1 | **067-6006** | 4 | PLUG | |
| | 4 | 1 | **147-1979** | 16 | RETAINER | |
| | 5 | 1 | **185-0882** | 8 | GUIDE-VALVE (INTAKE) | |
| | 6 | 1 | **199-9751** | 1 | SEAL-O-RING | |
| | 7 | 1 | **225-5493** | 4 | INSERT-VALVE (INLET) | |
| | 8 | 1 | **225-5494** | 4 | INSERT-VALVE (EXHAUST) | |
| | 9 | 1 | **225-5495** | 4 | VALVE-INLET | |
| | 10 | 1 | **225-5496** | 8 | SPRING-VALVE | |
| | 11 | 1 | **225-5497** | 8 | SEAL-VALVE | |
| | 12 | 1 | **225-5498** | 8 | CAP | |
| | 13 | 1 | **225-5499** | 4 | VALVE-EXHAUST | |
| | 14 | 1 | **232-1322** | 1 | PLUG | |

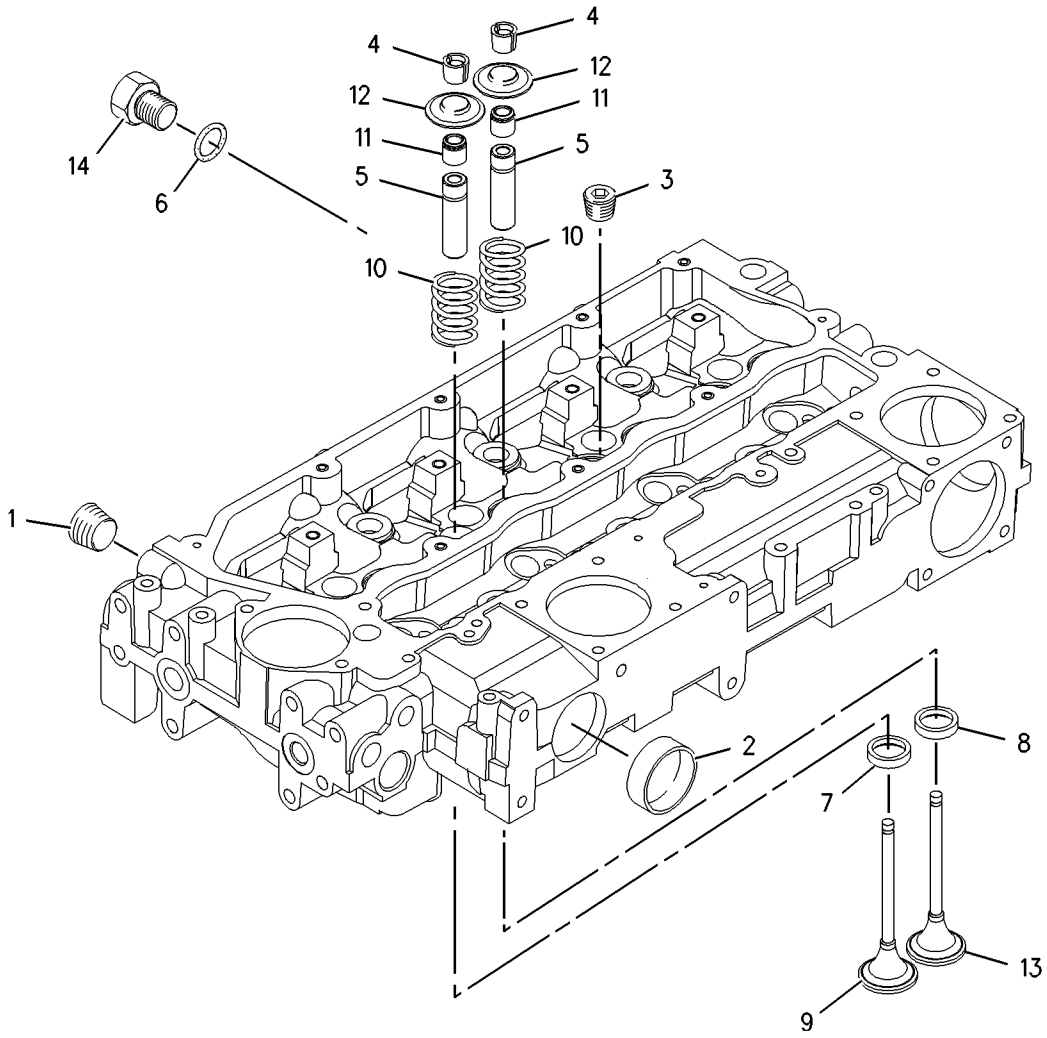


GRAPHIC #1 **<END>** g00951196

# BASIC ENGINE

## *232-7524* CYLINDER HEAD GP

**S/N: CRS1-UP**

**PART OF 234-3059, 234-3061 ENGINE AR-PRIMARY**

**AN ATTACHMENT**

**SMCS-1100, 1101, 1103, 1104, 1105, 1106, 1108, 1109, 1115, 1117, 1121, 1124, 1125** **i01998641**

| NOTE | REF NO | GRAPHIC REF | PART NUMBER | QTY | PART NAME 1 2 3 4 5 6 (PRODUCT LEVEL) | SEE PAGE |
|---|---|---|---|---|---|---|
| | 1 | 1 | **225-5501** | 7 | BOLT | |
| | 2 | 1 | **225-5502** | 3 | BOLT | |
| | 3 | 1 | **240-7194** | 1 | GASKET-HEAD | |
| Y | 4 | 1 | **232-7519** | 1 | CYLINDER HEAD GP | 32 |

Y-SEPARATE ILLUSTRATION

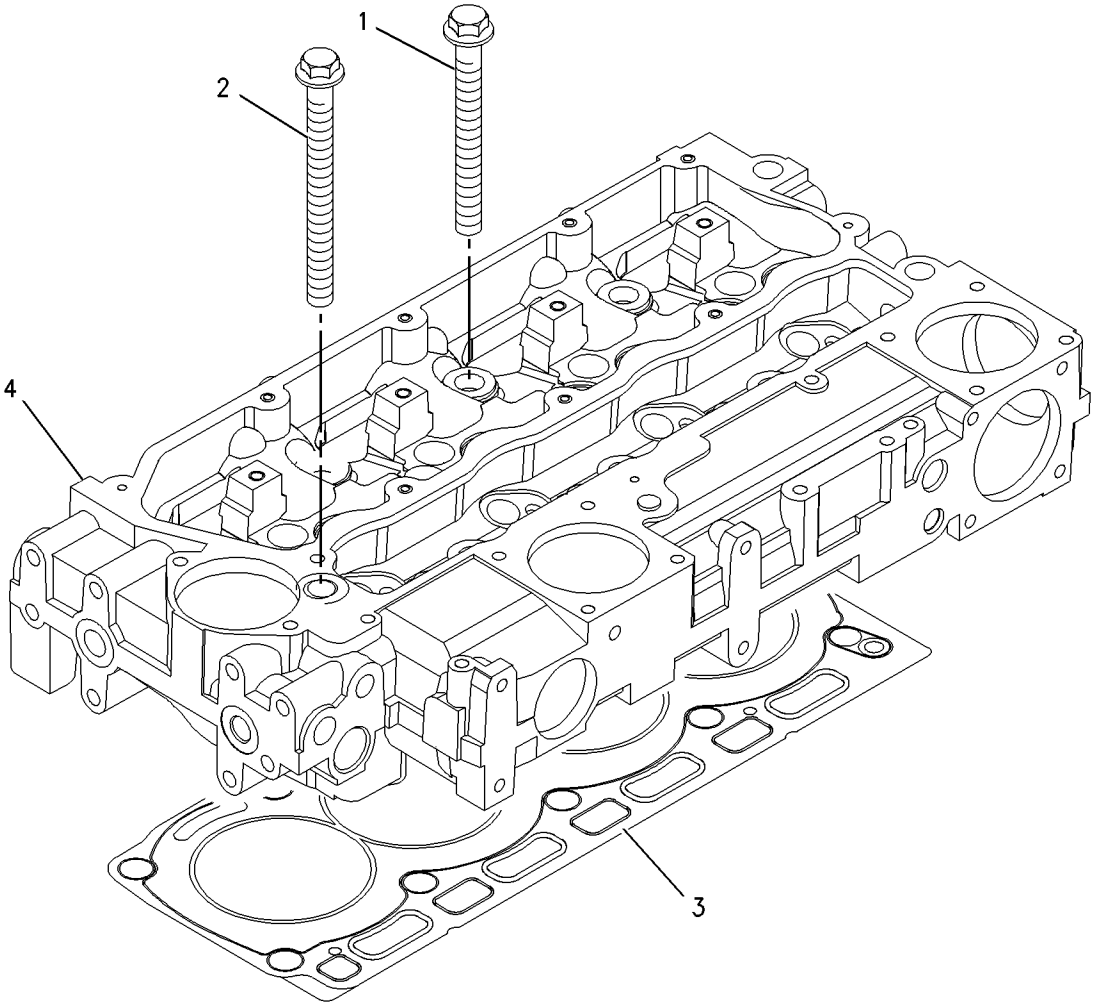


GRAPHIC #1 **<END>** g00909291

# BASIC ENGINE

## *236-8241* DRIVE GP-FAN

**S/N: CRS1-UP**

**PART OF 234-3059, 234-3061 ENGINE AR-PRIMARY**

**AN ATTACHMENT**

**SMCS-1357, 1358, 1359, 1390** **i01998687**

| NOTE | REF NO | GRAPHIC REF | PART NUMBER | QTY | PART NAME 1 2 3 4 5 6 (PRODUCT LEVEL) | SEE PAGE |
|---|---|---|---|---|---|---|
| | 1 | 1 | **111-0859** | 4 | BOLT (M10X1.5X35MM) | |
| | 2 | 1 | **230-8065** | 1 | HOUSING AS | |

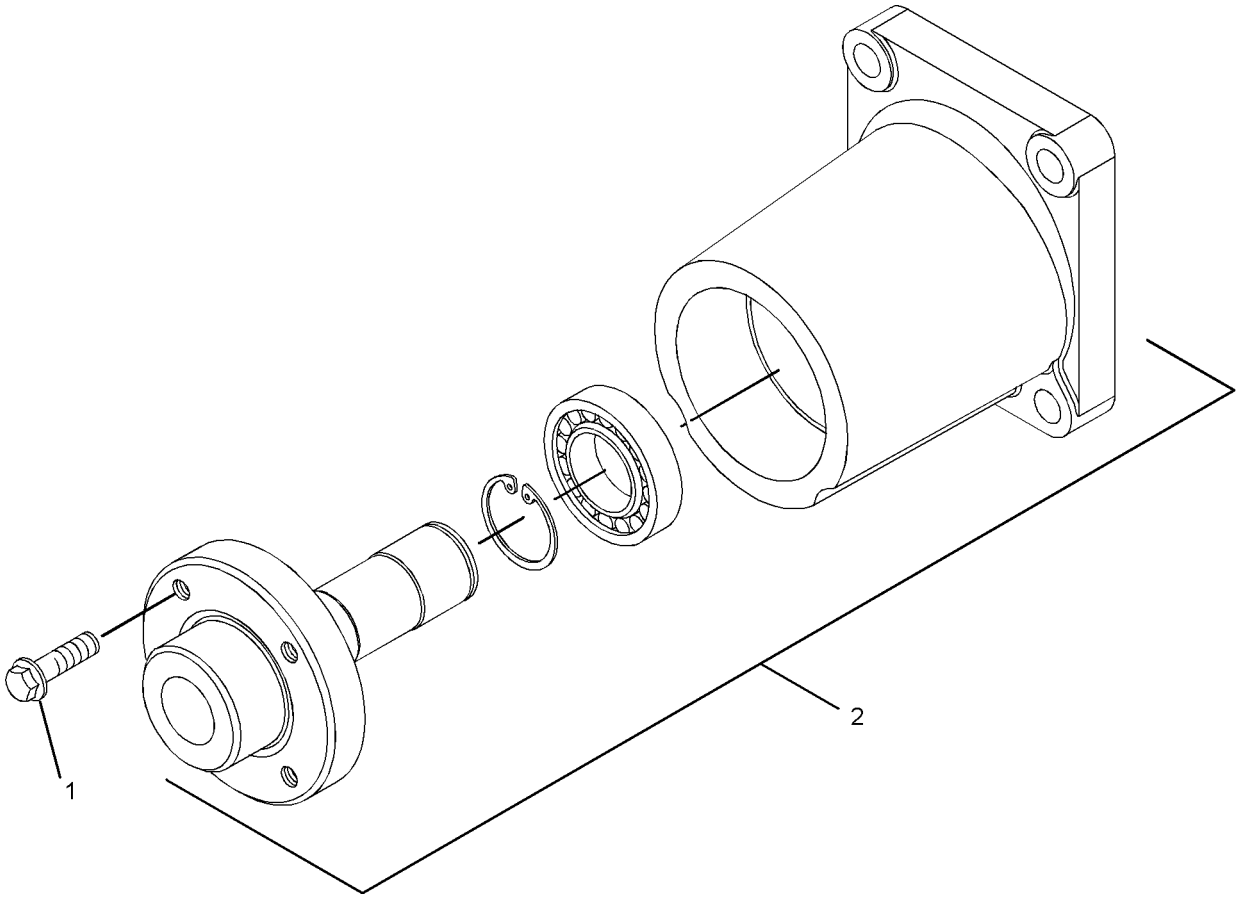


GRAPHIC #1 **<END>** g01022188

# BASIC ENGINE

## *230-7300* FLYWHEEL GP

**S/N: CRS1-UP**

**PART OF 234-3059, 234-3061 ENGINE AR-PRIMARY**

**AN ATTACHMENT**

**SMCS-1156, 1158** **i02004994**

| NOTE | REF NO | GRAPHIC REF | PART NUMBER | QTY | PART NAME 1 2 3 4 5 6 (PRODUCT LEVEL) | SEE PAGE |
|---|---|---|---|---|---|---|
| | 1 | 1 | **0S-1603** | 6 | BOLT (1/2-20X1.5 IN) | |
| | 2 | 1 | **5P-8245** | 6 | WASHER-HARD (13.5X25.5X3MM THK) | |
| | 3 | 1 | **245-9828** | 1 | FLYWHEEL AS | |
| | 4 | 1 | **033-7687** | 1 | RING (126 TEETH) | |

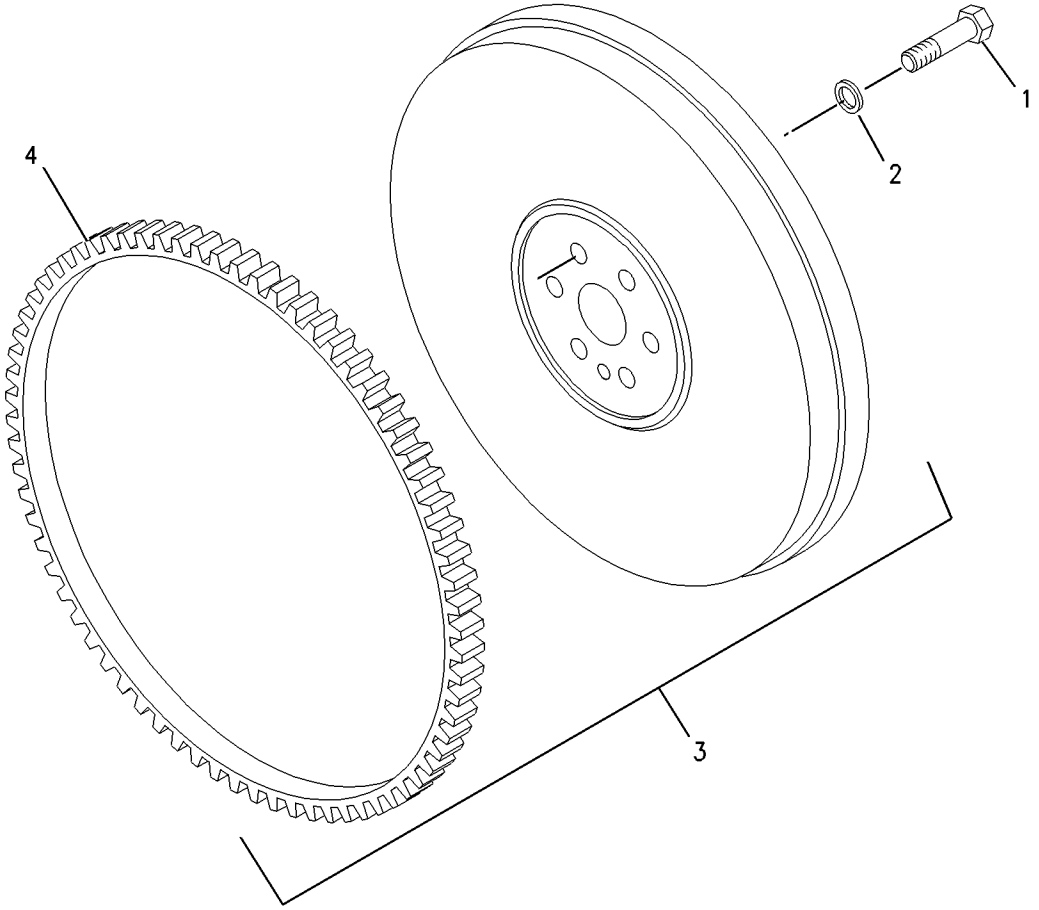


GRAPHIC #1 **<END>** g00955555

# BASIC ENGINE

## *236-8238* HOUSING GP-FLYWHEEL

**S/N: CRS1-UP**

**PART OF 234-3059, 234-3061 ENGINE AR-PRIMARY**

**AN ATTACHMENT**

**SMCS-1157** **i01925938**

| NOTE | REF NO | GRAPHIC REF | PART NUMBER | QTY | PART NAME 1 2 3 4 5 6 (PRODUCT LEVEL) | SEE PAGE |
|---|---|---|---|---|---|---|
| | 1 | 1 | **6I-0423** | 2 | BOLT (M12X1.75X30MM) | |
| | 2 | 1 | **6I-0847** | 1 | PLUG | |
| | 3 | 1 | **7W-1176** | 1 | PLATE-COVER | |
| | 4 | 1 | **7W-4642** | 1 | SHIELD-DUST | |
| | 5 | 1 | **067-6123** | 2 | DOWEL | |
| | 6 | 1 | **114-4363** | 2 | BOLT (M8X1.25X12MM) | |
| | 7 | 1 | **101-3617** | 3 | PLUG | |
| | 8 | 1 | **121-0883** | 6 | BOLT (M10X1.5X30MM) | |
| | 9 | 1 | **220-8631** | 1 | HOUSING-FLYWHEEL | |

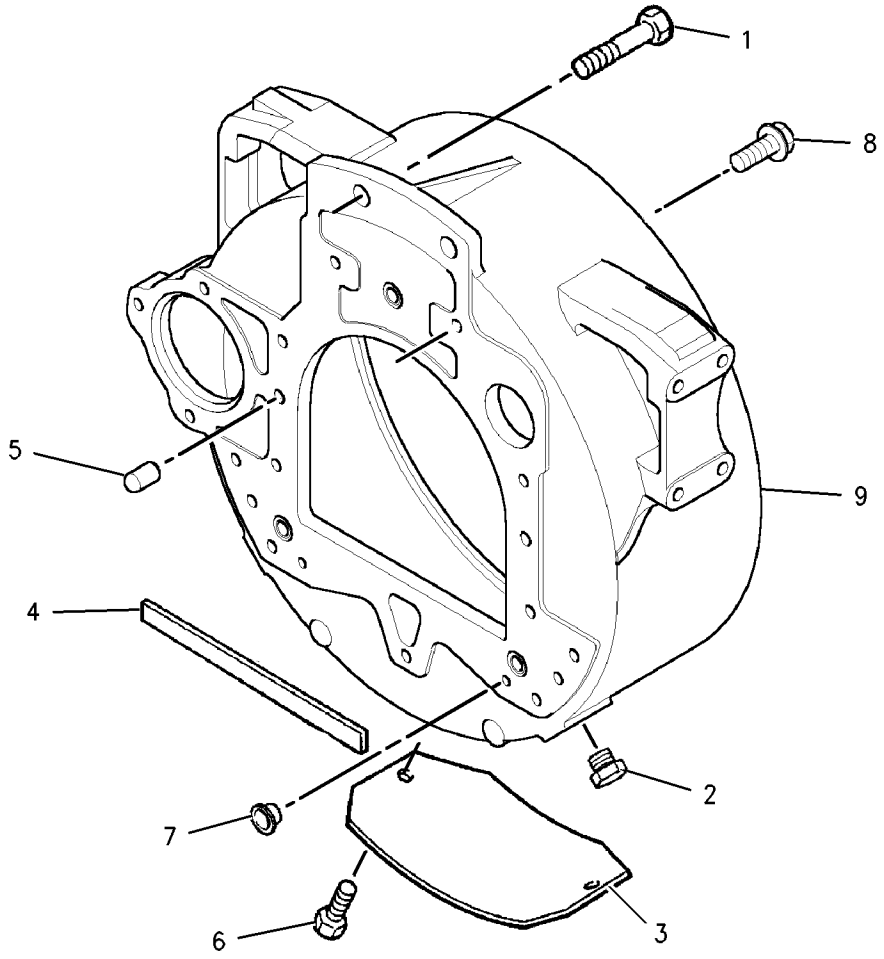


GRAPHIC #1 **<END>** g00902549

# BASIC ENGINE

## *232-3670* HOUSING GP-FRONT

**S/N: CRS1-UP**

**PART OF 234-3059, 234-3061 ENGINE AR-PRIMARY**

**AN ATTACHMENT**

**SMCS-1151, 1162, 1166** **i01896798**

| NOTE | REF NO | GRAPHIC REF | PART NUMBER | QTY | PART NAME 1 2 3 4 5 6 (PRODUCT LEVEL) | SEE PAGE |
|---|---|---|---|---|---|---|
| | 1 | 1 | **1B-8736** | 1 | KEY-WOODRUFF | |
| | 2 | 1 | **6I-0217** | 8 | BOLT (M8X1.25X20MM) | |
| | 3 | 1 | **6I-0645** | 4 | BOLT (M8X1.25X25MM) | |
| | 4 | 1 | **6I-0789** | 3 | BOLT (M10X1.5X60MM) | |
| | 5 | 1 | **7C-4616** | 1 | BOLT (M12X1.75X45MM) | |
| | 6 | 1 | **067-6179** | 1 | DOWEL | |
| | 7 | 1 | **067-6897** | 1 | HUB-IDLER GEAR | |
| | 8 | 1 | **067-6900** | 1 | PLATE-RETAINING | |
| | 9 | 1 | **100-3751** | 5 | BOLT (M8X1.25X65MM) | |
| | 10 | 1 | **124-3815** | 10 | BOLT (M8X16X1.25MM) | |
| | 11 | 1 | **133-1011** | 1 | WASHER | |
| | 12 | 1 | **216-8633** | 1 | GEAR AS-IDLER (73 TEETH) | |
| | 12A | 1 | **067-6899** | 2 | BUSHING-IDLER GEAR | |
| | 13 | 1 | **216-8634** | 1 | GEAR-CAMSHAFT (68 TEETH) | |
| | 14 | 1 | **225-8278** | 1 | HOUSING-FRONT | |
| | 15 | 1 | **225-8280** | 1 | SEAL-CRANKSHAFT | |
| | 16 | 1 | **225-8281** | 1 | GASKET | |
| | 17 | 1 | **225-8282** | 1 | GASKET | |
| | 18 | 1 | **232-3657** | 1 | COVER AS-FRONT | |
| | 19 | 1 | **232-3666** | 1 | WASHER-THRUST | |

*232-3670* **HOUSING GP-FRONT** *(contd.)* **i01896798**

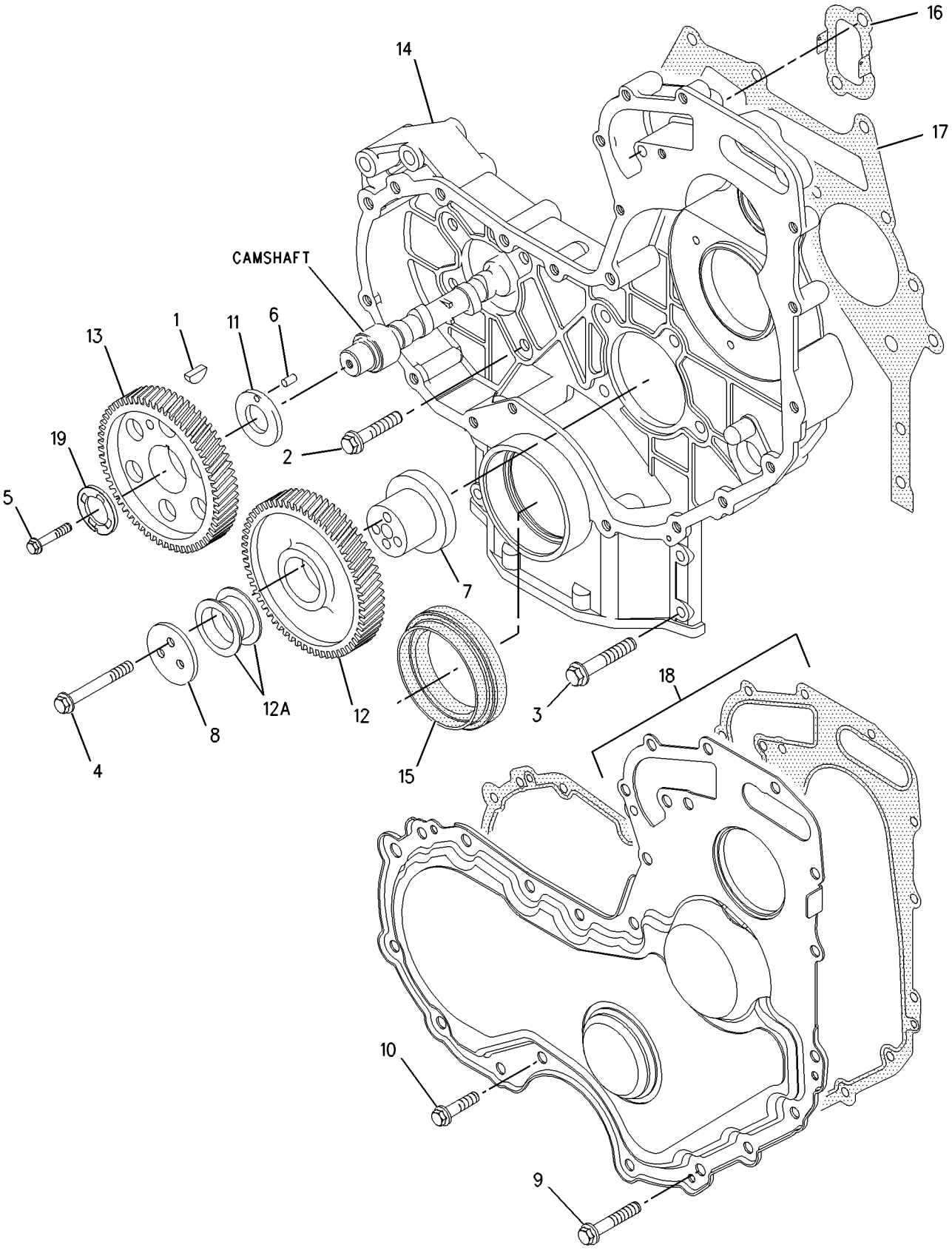


GRAPHIC #1 **<END>** g00985089

# BASIC ENGINE

## *233-7432* LIFTING GP-ENGINE

**S/N: CRS1-UP**

**PART OF 234-3059, 234-3061 ENGINE AR-PRIMARY**

**AN ATTACHMENT**

**SMCS-1122** **i01998680**

| NOTE | REF NO | GRAPHIC REF | PART NUMBER | QTY | PART NAME 1 2 3 4 5 6 (PRODUCT LEVEL) | SEE PAGE |
|---|---|---|---|---|---|---|
| | 1 | 1 | **100-4830** | 4 | BOLT (M10X1.5X20MM) | |
| | 2 | 1 | **225-8848** | 2 | PLATE | |

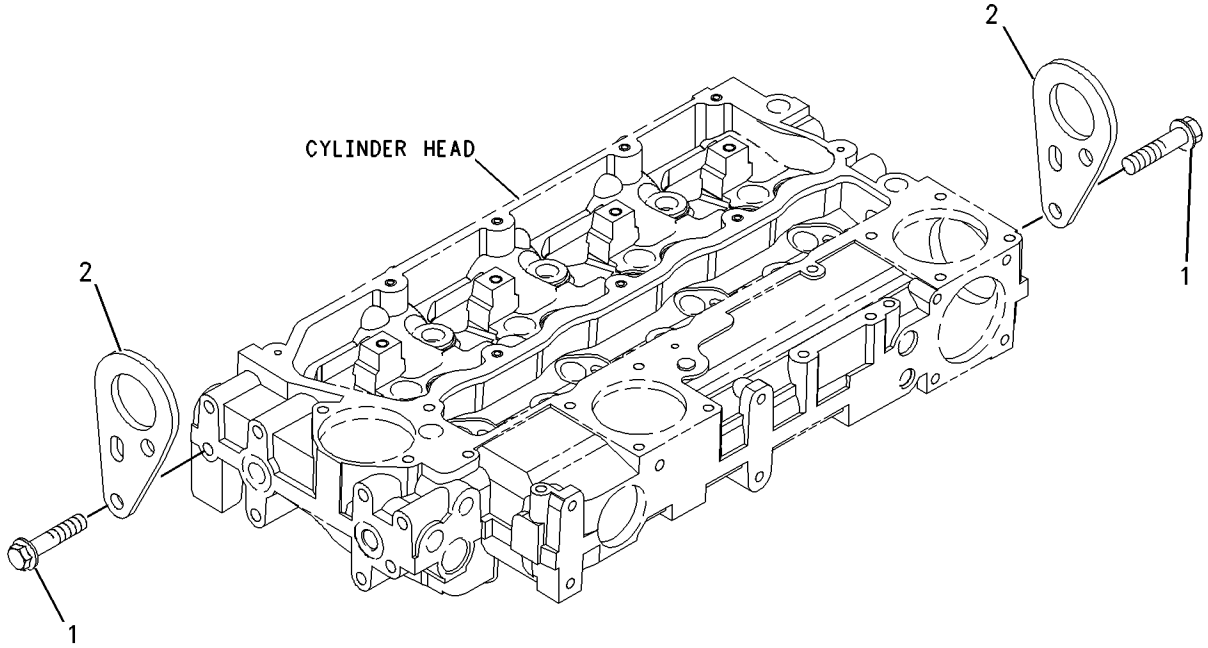


GRAPHIC #1 **<END>** g00955299

# BASIC ENGINE

## *237-3658* MOUNTING GP-ENGINE

**S/N: CRS1-UP**

**PART OF 234-3059, 234-3061 ENGINE AR-PRIMARY**

**AN ATTACHMENT**

**SMCS-1152, 1153, 1154** **i01998683**

| NOTE | REF NO | GRAPHIC REF | PART NUMBER | QTY | PART NAME 1 2 3 4 5 6 (PRODUCT LEVEL) | SEE PAGE |
|---|---|---|---|---|---|---|
| | 1 | 1 | **101-2987** | 6 | PLUG | |
| | 2 | 1 | **6H-3616** | 3 | PLUG-PROTECTION | |
| | 3 | 1 | **195-2132** | 1 | SUPPORT-FRONT | |
| | 4 | 1 | **195-2134** | 1 | SUPPORT-FRONT | |
| | 5 | 1 | **195-2136** | 8 | STUD | |
| | 6 | 1 | **195-2221** | 8 | NUT | |

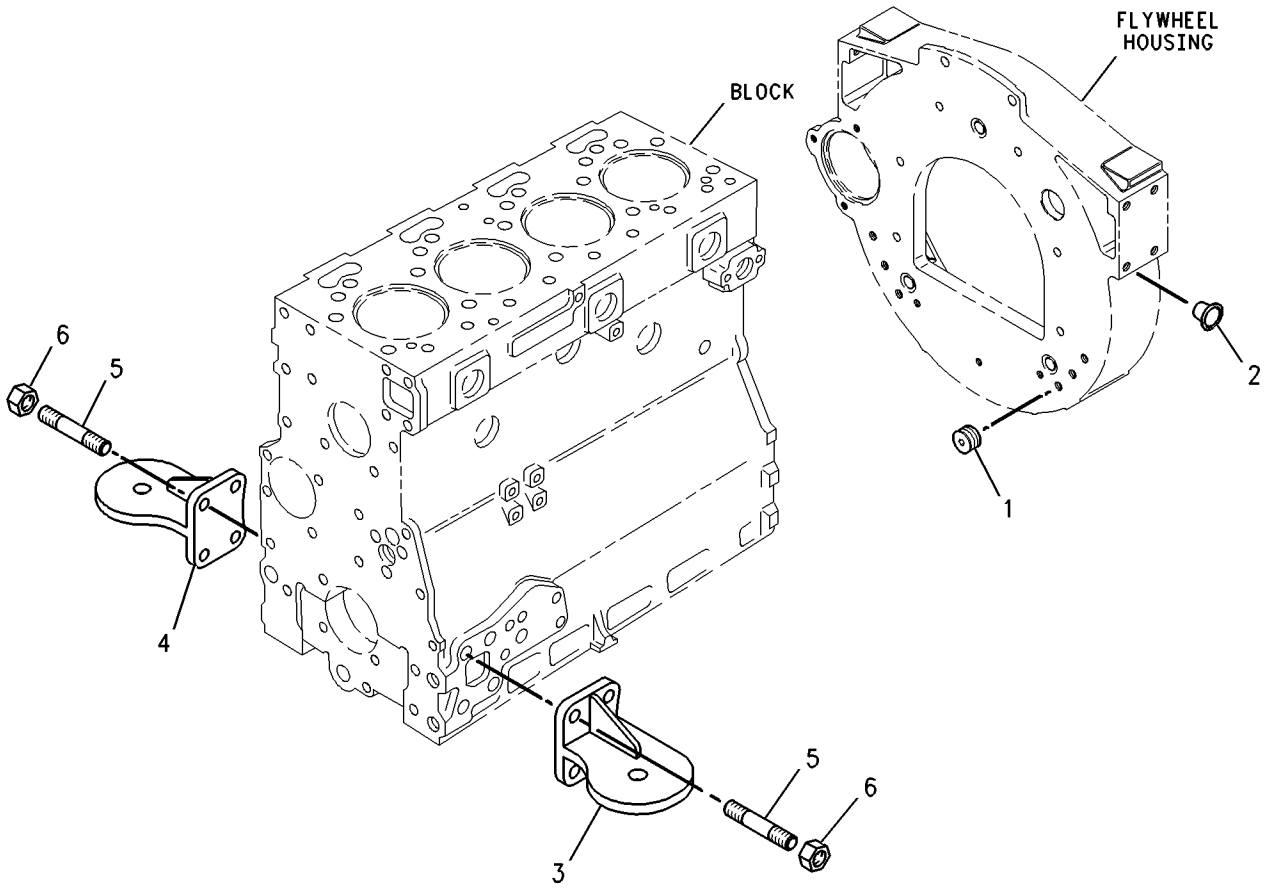


GRAPHIC #1 **<END>** g00738284

# BASIC ENGINE

## *143-0782* MOUNTING GP-ENGINE & TMSN

**S/N: BXC1-UP; DSX1-UP**
**PART OF 214-7012, 214-7014 POWER TRAIN AR**
**AN ATTACHMENT**

**SMCS-1152, 1153, 1154** **i01670193**

| NOTE | REF NO | GRAPHIC REF | PART NUMBER | QTY | PART NAME 1 2 3 4 5 6 (PRODUCT LEVEL) | SEE PAGE |
|---|---|---|---|---|---|---|
| | 1 | 1 | **3E-4892** | 4 | WASHER | |
| | 2 | 1 | **3E-4924** | 2 | MOUNTING AS | |
| | 3 | 1 | **6Y-9915** | 2 | MOUNT AS | |
| | 4 | 1 | **9W-9953** | 2 | SLEEVE | |
| | 5 | 1 | **8T-4121** | 12 | WASHER-HARD (11X21X2.5MM THK) | |
| M | 6 | 1 | **8T-4132** | 4 | NUT (M16X2 THD) | |
| M | 7 | 1 | **8T-4174** | 4 | BOLT (M16X2.0X120MM) | |
| M | 8 | 1 | **8T-4196** | 12 | BOLT (M10X1.5X35MM) | |
| | 9 | 1 | **9X-8257** | 8 | WASHER (17.5X30X3.5MM THK) | |

M-METRIC PART

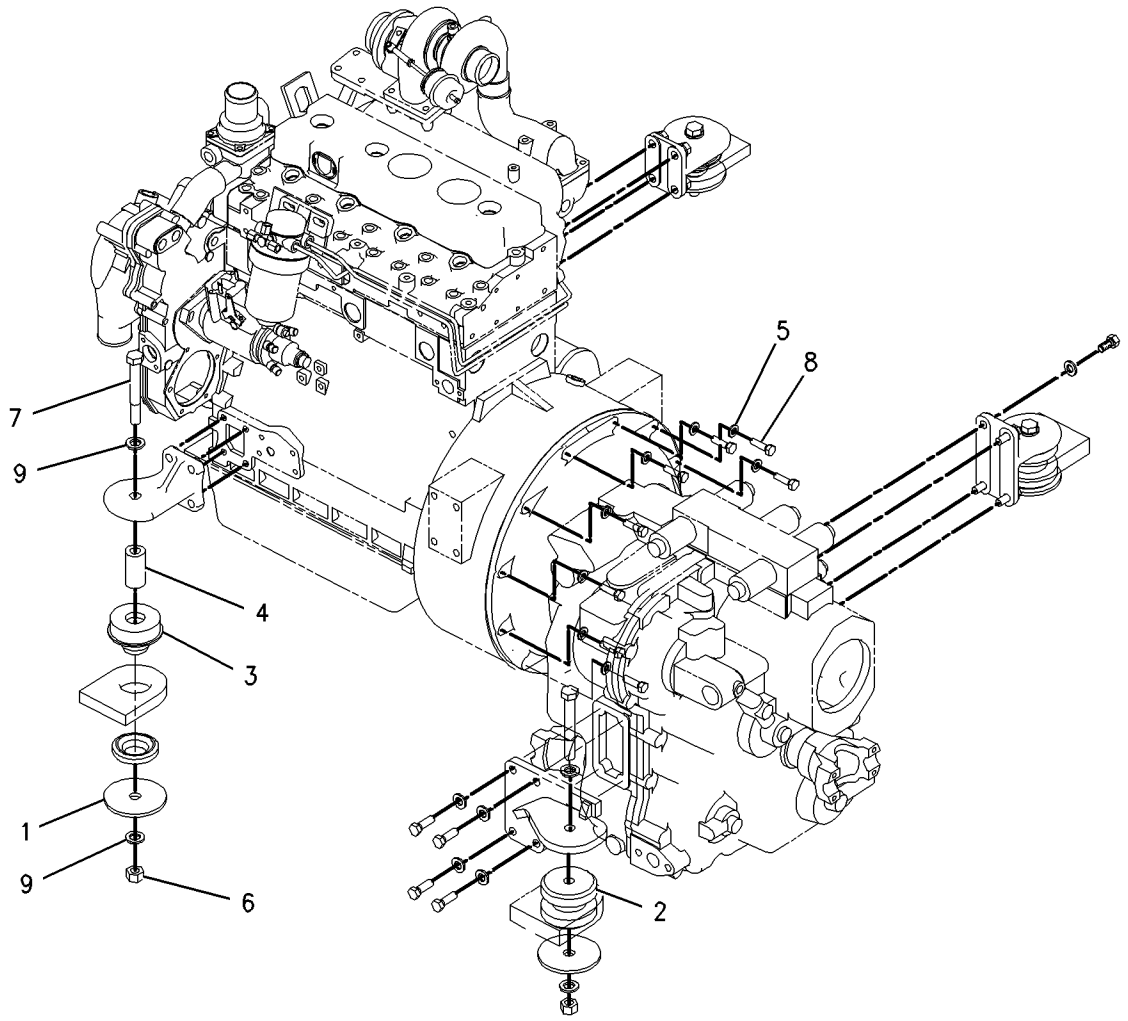


GRAPHIC #1 **<END>** g00863051

# BASIC ENGINE

## *143-0788* MOUNTING GP-ENGINE & TMSN—POWER SHIFT

**S/N: BXC1-UP; DSX1-UP**
**PART OF 214-7013, 214-7015 POWER TRAIN AR**
**AN ATTACHMENT**

**SMCS-1152, 1153, 1154** **i01738987**

| NOTE | REF NO | GRAPHIC REF | PART NUMBER | QTY | PART NAME 1 2 3 4 5 6 (PRODUCT LEVEL) | SEE PAGE |
|---|---|---|---|---|---|---|
| | 1 | 1 | **3E-4892** | 4 | WASHER | |
| | 2 | 1 | **3E-4924** | 2 | MOUNTING AS | |
| | 3 | 1 | **6Y-9915** | 2 | MOUNT AS | |
| | 4 | 1 | **9W-9953** | 2 | SLEEVE | |
| M | 5 | 1 | **8T-4174** | 4 | BOLT (M16X2.0X120MM) | |
| M | 6 | 1 | **8T-4196** | 12 | BOLT (M10X1.5X35MM) | |
| | 7 | 1 | **9X-8257** | 8 | WASHER (17.5X30X3.5MM THK) | |
| | 8 | 1 | **8T-4121** | 12 | WASHER-HARD (11X21X2.5MM THK) | |
| M | 9 | 1 | **8T-4132** | 4 | NUT (M16X2 THD) | |

M-METRIC PART

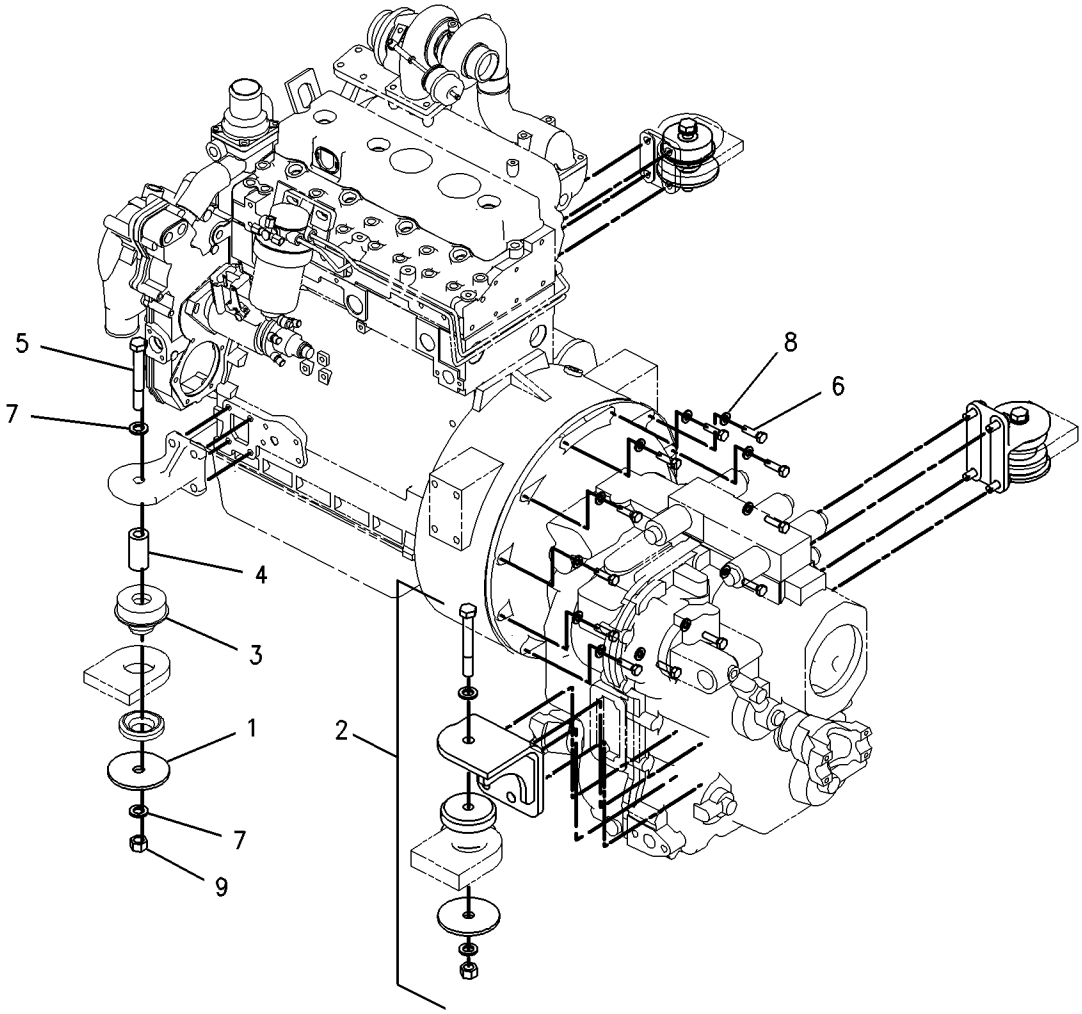


GRAPHIC #1 **<END>** g00890687

# BASIC ENGINE

## *237-0025* PAN GP-OIL

**S/N: CRS1-UP**

**PART OF 234-3059, 234-3061 ENGINE AR-PRIMARY**

**AN ATTACHMENT**

**SMCS-1302** **i01998684**

| NOTE | REF NO | GRAPHIC REF | PART NUMBER | QTY | PART NAME 1 2 3 4 5 6 (PRODUCT LEVEL) | SEE PAGE |
|---|---|---|---|---|---|---|
| | 1 | 1 | **5P-6718** | 2 | SEAL-O-RING | |
| | 2 | 1 | **6I-0217** | 12 | BOLT (M8X1.25X20MM) | |
| | 3 | 1 | **6I-0260** | 2 | BOLT (M8X1.25X25MM) | |
| | 4 | 1 | **6I-0289** | 1 | PLUG | |
| | 5 | 1 | **6I-0363** | 2 | BOLT (M6X1.0X20MM) | |
| | 6 | 1 | **6I-0572** | 2 | BOLT (M8X1.25.20MM) | |
| | 7 | 1 | **7C-0351** | 2 | PLUG-SUMP DRAIN | |
| | 8 | 1 | **067-6213** | 1 | GASKET | |
| | 9 | 1 | **101-3771** | 6 | BOLT | |
| | 10 | 1 | **225-6004** | 1 | PAN AS-OIL | |
| | 10A | 1 | **7C-1224** | 2 | INSERT | |
| | 11 | 1 | **225-6005** | 1 | GASKET | |
| | 12 | 1 | **225-6041** | 1 | TUBE | |
| | 13 | 1 | **230-8094** | 1 | BRIDGE | |

*237-0025* **PAN GP-OIL** *(contd.)* **i01998684**

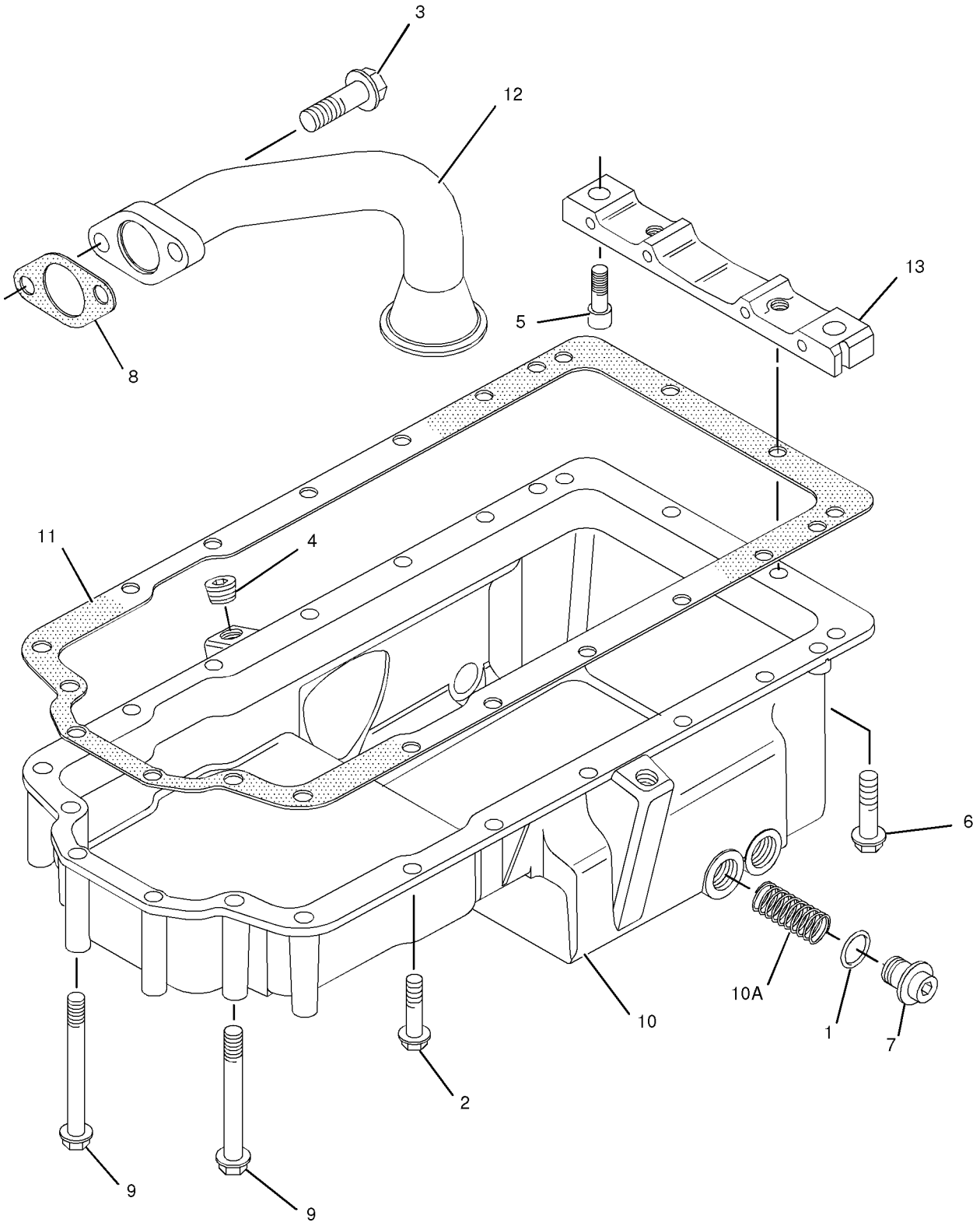


GRAPHIC #1 **<END>** g01036037

# BASIC ENGINE

## *232-7442* PISTON & ROD GP

**S/N: CRS1-UP**

**PART OF 234-3059, 234-3061 ENGINE AR-PRIMARY**

**AN ATTACHMENT**

**SMCS-1213, 1214, 1215, 1218, 1219, 1225, 1239** **i01998628**

| NOTE | REF NO | GRAPHIC REF | PART NUMBER | QTY | PART NAME 1 2 3 4 5 6 (PRODUCT LEVEL) | SEE PAGE |
|---|---|---|---|---|---|---|
| | 1 | 1 | **225-5437** | 4 | PISTON AS | |
| | | | | | (EACH PISTON AS INCLUDES) | |
| | 2 | 1 | **124-3536** | 2 | RING-RETAINING | |
| | 3 | 1 | **225-5436** | 1 | KIT-PISTON RING | |
| J | 4 | 1 | **225-5441** | 4 | ROD AS (L) | |
| | | | | | —OR— | |
| J | | 1 | **225-5451** | 4 | ROD AS (K) | |
| | | | | | —OR— | |
| J | | 1 | **225-5453** | 4 | ROD AS (J) | |
| | | | | | —OR— | |
| J | | 1 | **225-5454** | 4 | ROD AS (H) | |
| | | | | | —OR— | |
| J | | 1 | **225-5458** | 4 | ROD AS (G) | |
| | | | | | —OR— | |
| J | | 1 | **225-5459** | 4 | ROD AS (F) | |
| | | | | | (EACH ROD AS INCLUDES) | |
| | 5 | 1 | **225-5438** | 1 | BUSHING | |
| | 6 | 1 | **225-5439** | 2 | BOLT | |

J-ENSURE THAT CORRECT ROD LENGTH IS FITTED

*232-7442* **PISTON & ROD GP** *(contd. )* **i01998628**

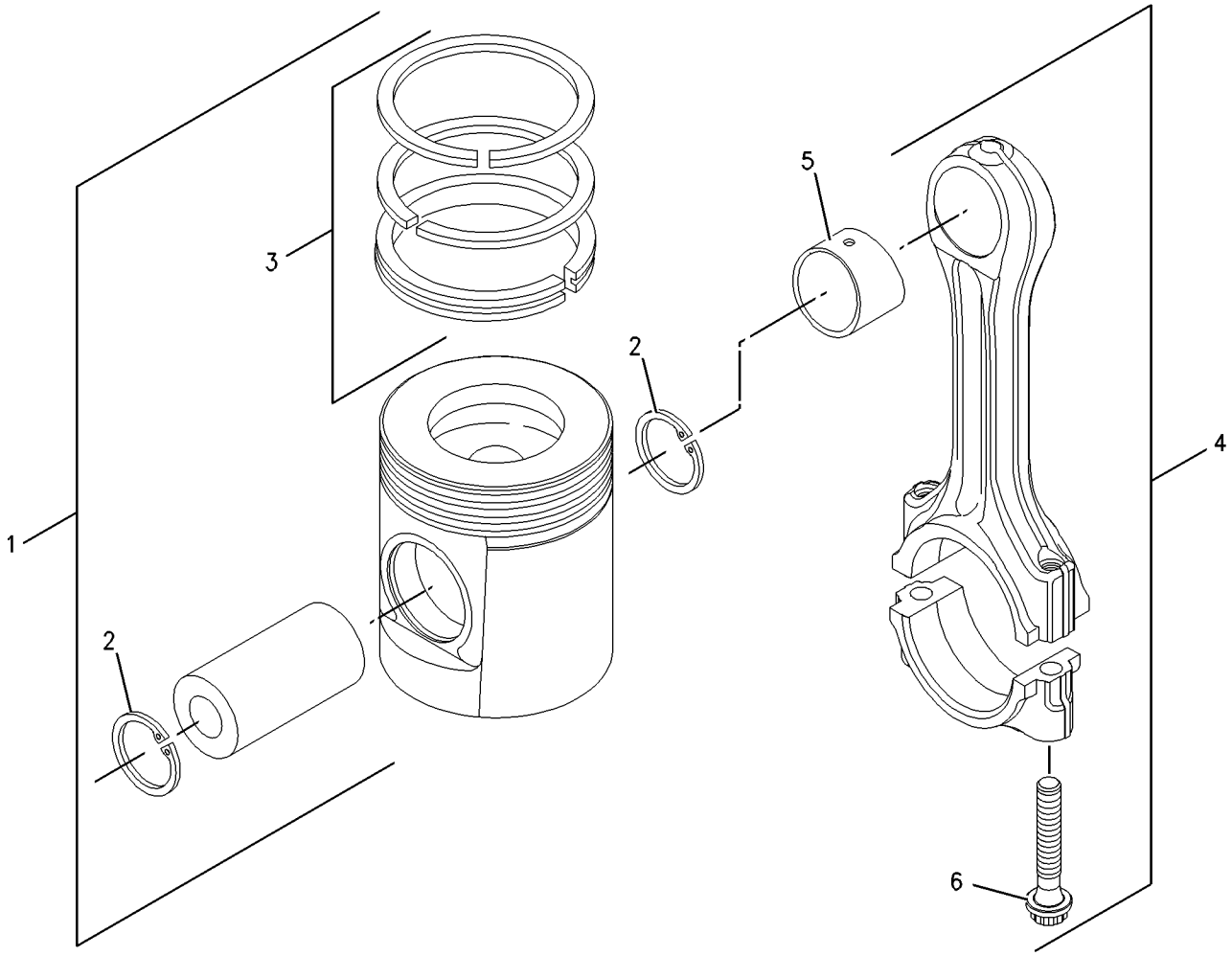


GRAPHIC #1 **<END>** g00909669

# BASIC ENGINE

## *225-4317* PLUG GP-ENGINE

**S/N: CRS1-UP**

**PART OF 234-3059, 234-3061 ENGINE AR-PRIMARY**

**AN ATTACHMENT**

**SMCS-1000** **i01772005**

| NOTE | REF NO | GRAPHIC REF | PART NUMBER | QTY | PART NAME 1 2 3 4 5 6 (PRODUCT LEVEL) | SEE PAGE |
|---|---|---|---|---|---|---|
| | 1 | 1 | **2B-0858** | 3 | PLUG-PIPE | |

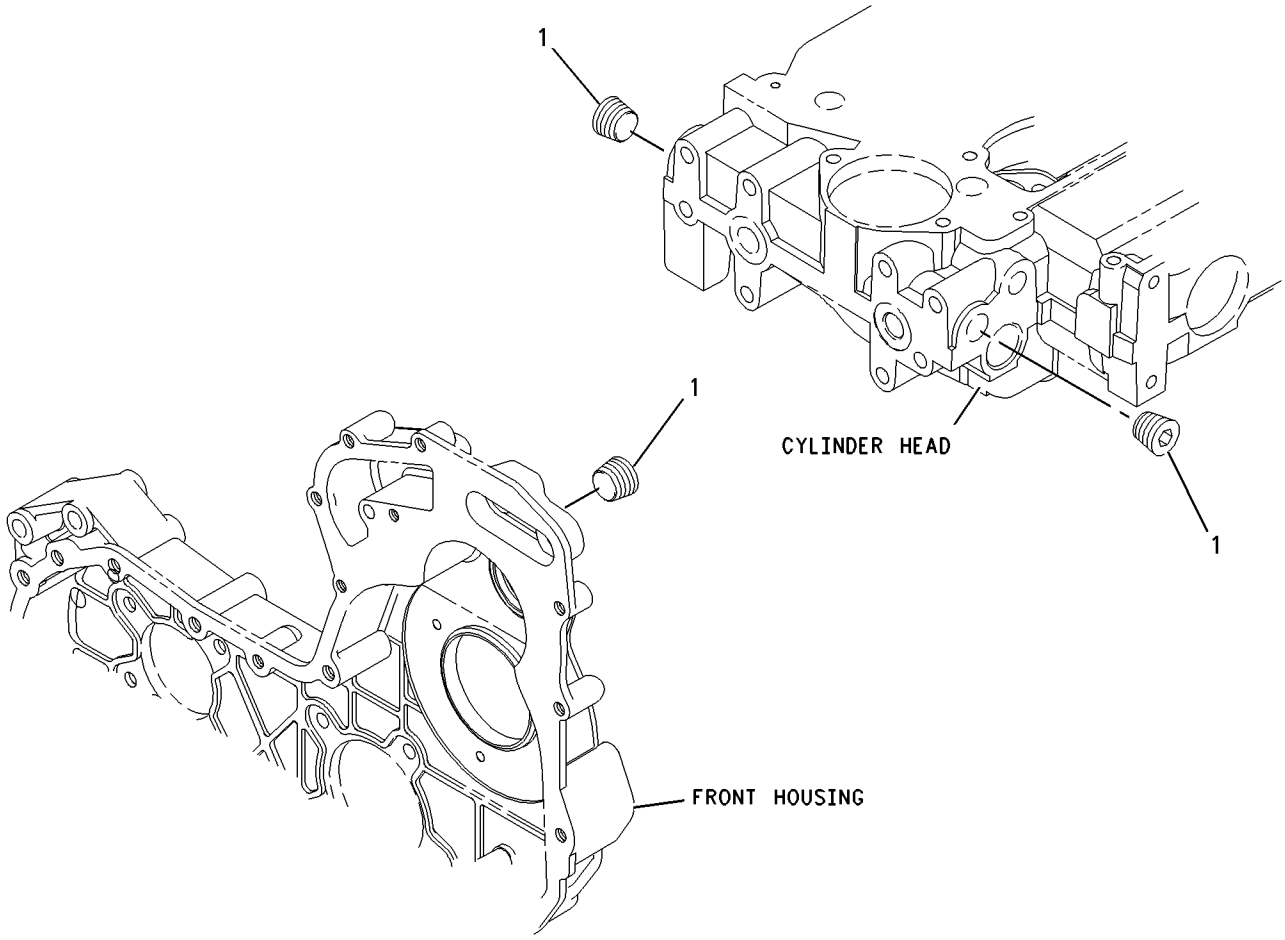


GRAPHIC #1 **<END>** g00911937

# BASIC ENGINE

## *230-7569* PLUG GP-ENGINE

**S/N: CRS1-UP**

**PART OF 234-3059, 234-3061 ENGINE AR-PRIMARY**

**AN ATTACHMENT**

**SMCS-1000** **i01896487**

| NOTE | REF NO | GRAPHIC REF | PART NUMBER | QTY | PART NAME 1 2 3 4 5 6 (PRODUCT LEVEL) | SEE PAGE |
|---|---|---|---|---|---|---|
| | 1 | 1 | **231-0046** | 1 | PLUG | |

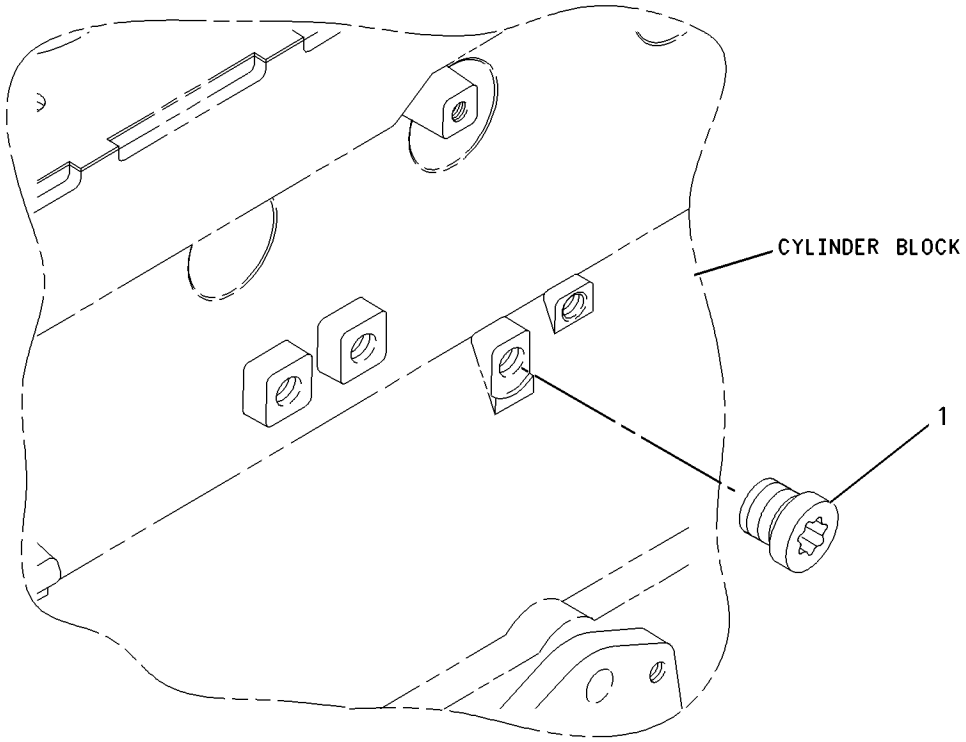


GRAPHIC #1 **<END>** g00911955

# BASIC ENGINE

## *230-7353* PULLEY GP-CRANKSHAFT

**S/N: CRS1-UP**

**PART OF 234-3059, 234-3061 ENGINE AR-PRIMARY**

**AN ATTACHMENT**

**SMCS-1205** **i01998616**

| NOTE | REF NO | GRAPHIC REF | PART NUMBER | QTY | PART NAME 1 2 3 4 5 6 (PRODUCT LEVEL) | SEE PAGE |
|---|---|---|---|---|---|---|
| | 1 | 1 | **6I-0501** | 1 | BLOCK | |
| | 2 | 1 | **6I-0502** | 1 | PULLEY | |
| | 3 | 1 | **7W-4634** | 3 | BOLT | |

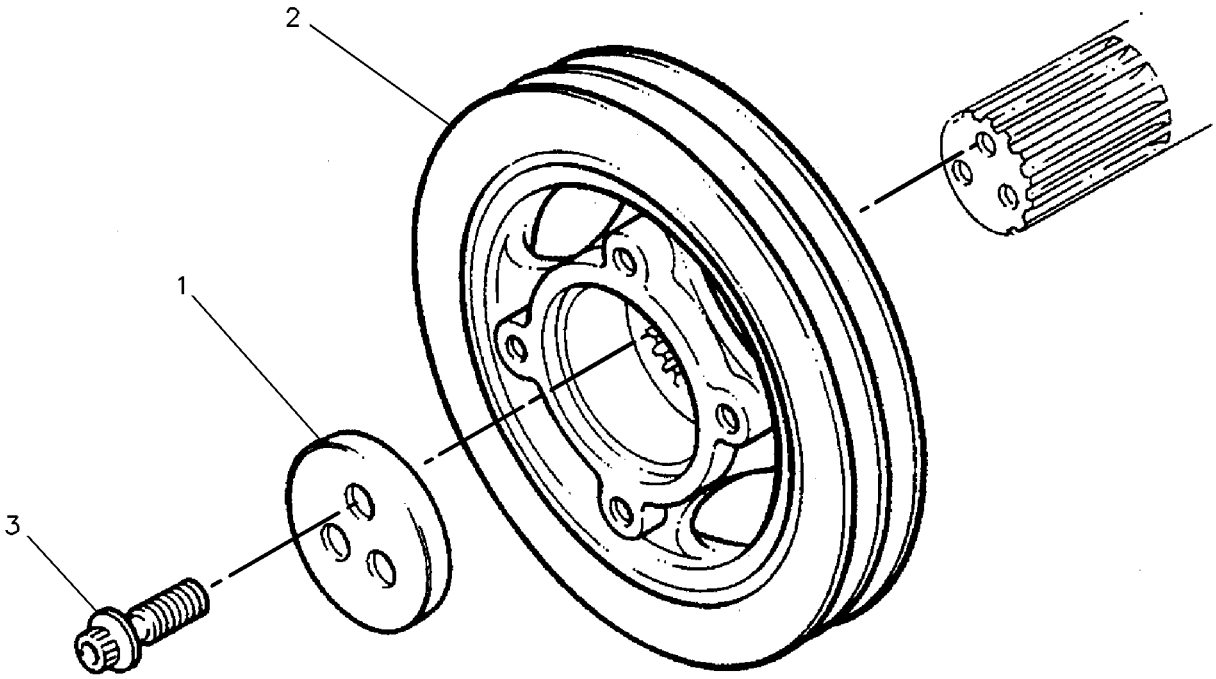


GRAPHIC #1 **<END>** g00130941

# BASIC ENGINE

## *232-7526* VALVE MECHANISM GP

**S/N: CRS1-UP**

**PART OF 234-3059, 234-3061 ENGINE AR-PRIMARY**

**AN ATTACHMENT**

**SMCS-1102, 1112, 1121, 1123, 1208, 1209** **i02002526**

| NOTE | REF NO | GRAPHIC REF | PART NUMBER | QTY | PART NAME 1 2 3 4 5 6 (PRODUCT LEVEL) | SEE PAGE |
|---|---|---|---|---|---|---|
| | 1 | 1 | **067-6095** | 8 | ROD | |
| | 2 | 1 | **138-2053** | 8 | TAPPET | |
| | 3 | 1 | **225-5963** | 1 | ROCKER ARM AS | |
| | 4 | 1 | **225-5625** | 4 | LEVER AS | |
| | | | | | (EACH INCLUDES) | |
| | 5 | 1 | **5B-9079** | 1 | NUT-JAM (3/8-24 THD) | |
| | 6 | 1 | **185-1546** | 1 | SCREW | |
| | 7 | 1 | **225-5634** | 1 | SHAFT AS | |
| | 8 | 1 | **225-5629** | 2 | PLUG | |
| | 9 | 1 | **225-5638** | 3 | SPRING | |
| | 10 | 1 | **225-5640** | 4 | LEVER AS | |
| | | | | | (EACH INCLUDES) | |
| | 11 | 1 | **5B-9079** | 1 | NUT-JAM (3/8-24 THD) | |
| | 12 | 1 | **185-1546** | 1 | SCREW | |
| | 13 | 1 | **225-5959** | 2 | CLIP | |
| | 14 | 1 | **225-5960** | 1 | BOLT | |
| | 15 | 1 | **225-5961** | 2 | WASHER | |
| | 16 | 1 | **225-5962** | 3 | BOLT | |

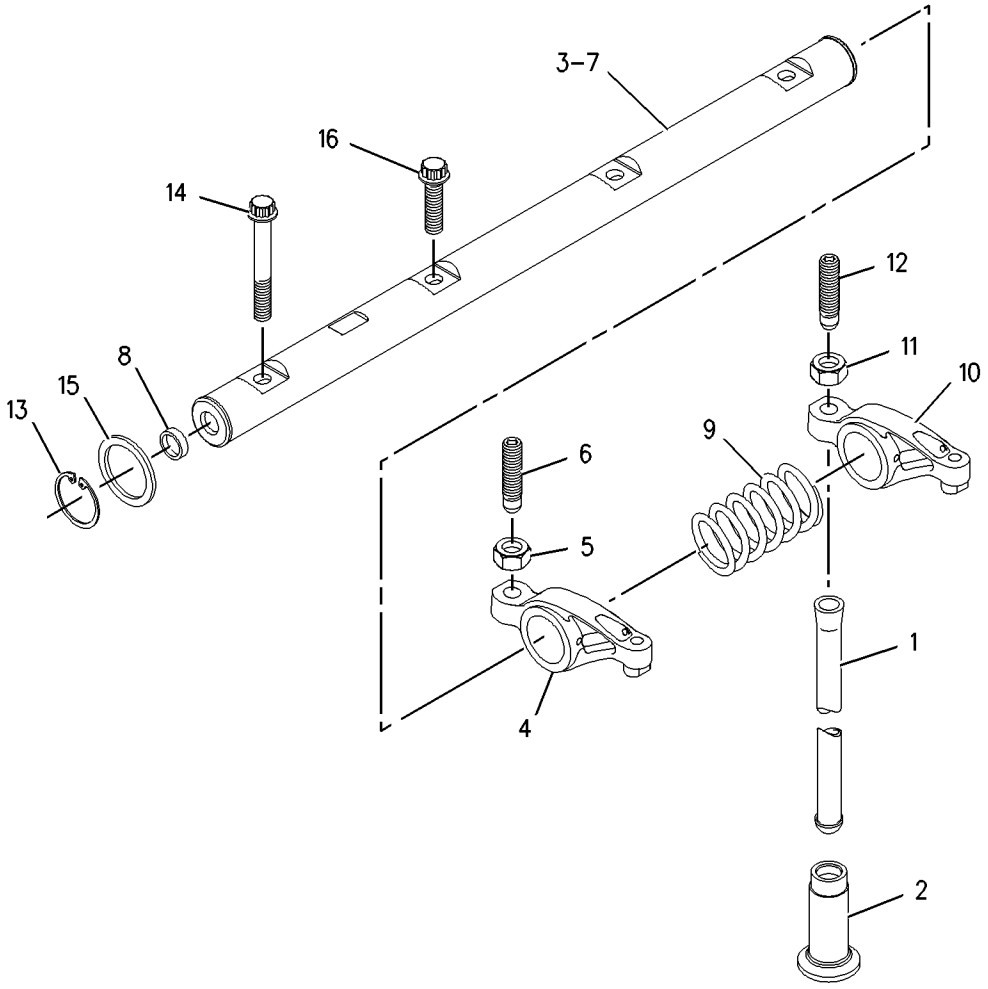


GRAPHIC #1 **<END>** g00910253

# LUBRICATION SYSTEM

## *234-7510* FILLER GP-ENGINE OIL

**S/N: BXC1-UP; DSX1-UP**
**PART OF 214-6891, 214-6893 ENGINE AR**
**AN ATTACHMENT**

**SMCS-1316** **i01991953**

| NOTE | PART NUMBER | QTY | PART NAME 1 2 3 4 5 6 (PRODUCT LEVEL) | SEE PAGE |
|---|---|---|---|---|
| | **6I-1497** | 1 | SEAL | |
| | **7W-2326** | 1 | FILTER AS-ENGINE OIL | |
| | **9M-7958** | 1 | CLAMP-HOSE | |
| | **127-4471** | 1 | CLAMP-HOSE | |
| | **234-7509** | 1 | TUBE AS | |
| | **234-7954** | 1 | HOSE (OIL FILLER) | |
| | **234-8815** | 1 | TUBE AS | |
| | **235-2491** | 1 | BRACKET AS | |
| M | **8T-3490** | 1 | NUT-WELD (M10X1.5 THD) | |
| | **236-6651** | 1 | CAP AS | |
| | **236-6652** | 1 | GAUGE-OIL LEVEL | |
| | **239-3683** | 1 | SUPPORT | |
| | **147-0385** | 2 | CLIP | |
| | **7D-7233** | 1 | CLIP | |
| | **7X-7729** | 7 | WASHER (11X25X3MM THK) | |
| M | **8T-4133** | 1 | NUT (M10X1.5 THD) | |
| M | **8T-4136** | 4 | BOLT (M10X1.5X25MM) | |
| M | **8T-4195** | 2 | BOLT (M10X1.5X30MM) | |

M-METRIC PART

**<END>**

# LUBRICATION SYSTEM

## *230-7578* PUMP GP-ENGINE OIL

**S/N: CRS1-UP**

**PART OF 234-3059, 234-3061 ENGINE AR-PRIMARY**

**AN ATTACHMENT**

**SMCS-1304, 1315** **i01896485**

| NOTE | REF NO | GRAPHIC REF | PART NUMBER | QTY | PART NAME 1 2 3 4 5 6 (PRODUCT LEVEL) | SEE PAGE |
|---|---|---|---|---|---|---|
| | 1 | 1 | **100-4461** | 5 | BOLT (M10X50MM) | |
| | 2 | 1 | **225-8329** | 1 | PUMP AS-ENGINE OIL | |

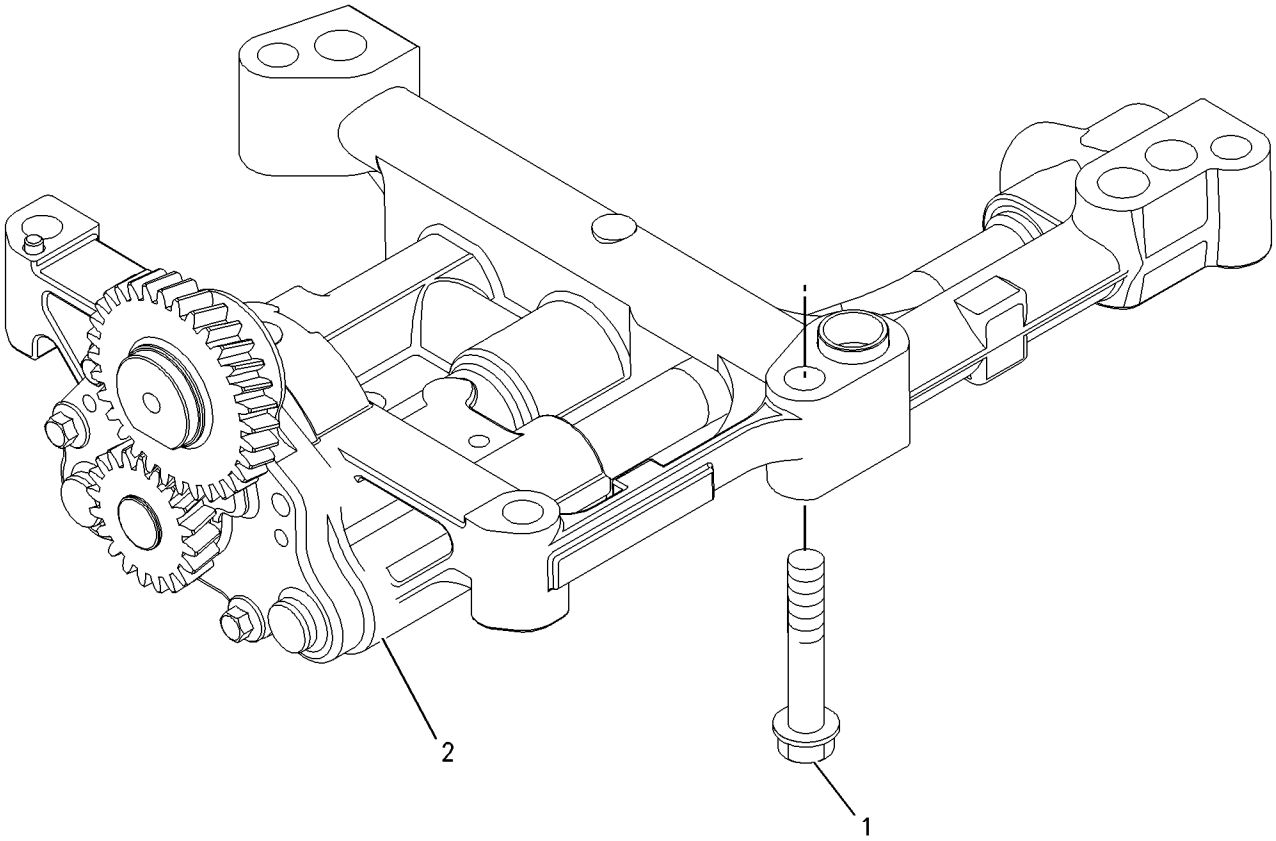


GRAPHIC #1 **<END>** g00911993

# COOLING SYSTEM

## *231-0033* CONNECTION GP-WATER

**S/N: CRS1-UP**

**PART OF 234-3059, 234-3061 ENGINE AR-PRIMARY**

**AN ATTACHMENT**

**SMCS-1380** **i01998620**

| NOTE | REF NO | GRAPHIC REF | PART NUMBER | QTY | PART NAME 1 2 3 4 5 6 (PRODUCT LEVEL) | SEE PAGE |
|---|---|---|---|---|---|---|
| | 1 | 1 | **6I-0260** | 2 | BOLT (M8X1.25X25MM) | |
| | 2 | 1 | **231-0030** | 1 | CONNECTION AS | |
| | 2A | 1 | **225-6908** | 1 | REGULATOR-WATER TEMPERATURE | |
| | 2B | 1 | **225-6909** | 1 | SEAL-O-RING (WATER TEMPERATURE REGULATOR) | |

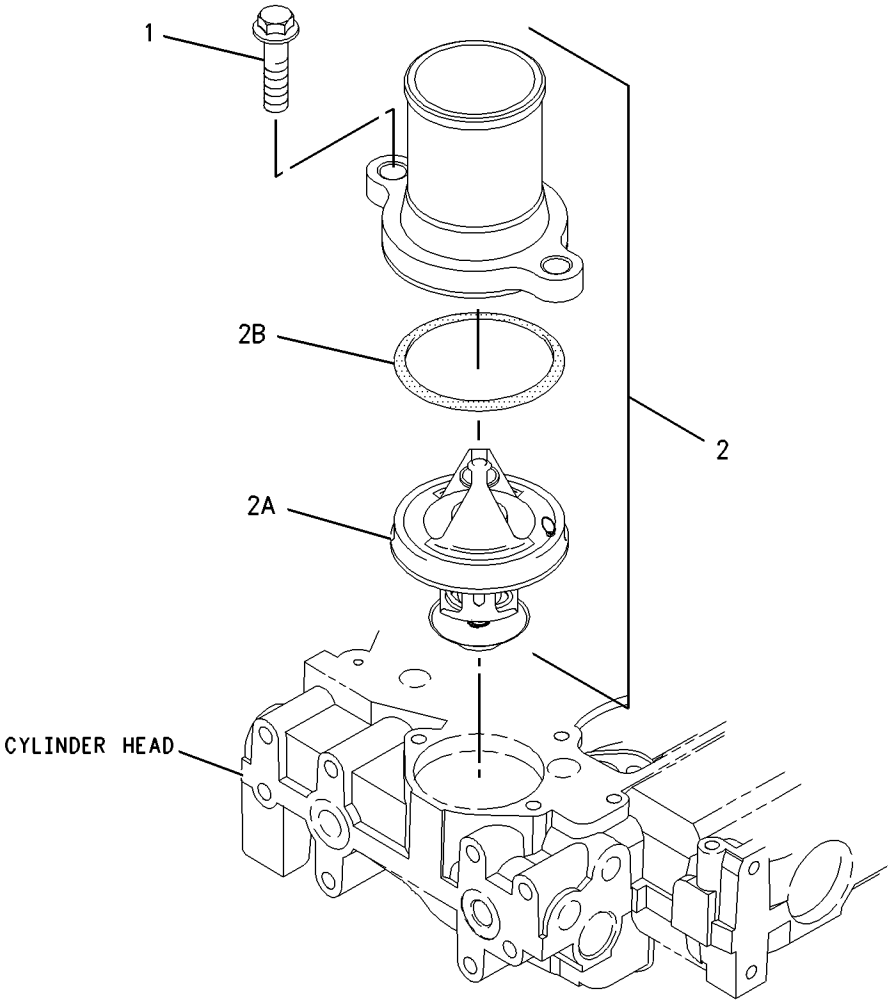


GRAPHIC #1 **<END>** g00950832

# COOLING SYSTEM

## *232-6177* COOLER GP-FLTR BASE & ENG OIL

**S/N: CRS1-UP**

**PART OF 234-3059, 234-3061 ENGINE AR-PRIMARY**

**AN ATTACHMENT**

**SMCS-1306, 1378** **i01998626**

| NOTE | REF NO | GRAPHIC REF | PART NUMBER | QTY | PART NAME 1 2 3 4 5 6 (PRODUCT LEVEL) | SEE PAGE |
|---|---|---|---|---|---|---|
| | 1 | 1 | **6I-0572** | 4 | BOLT (M8X1.25.20MM) | |
| | 2 | 1 | **6I-0645** | 4 | BOLT (M8X1.25X25MM) | |
| | 3 | 1 | **199-9267** | 1 | SEAL-O-RING | |
| | 4 | 1 | **225-7941** | 1 | PLUG (ENGINE OIL FILTER LINES) | |
| | 5 | 1 | **225-7944** | 2 | GASKET | |
| | 6 | 1 | **230-8279** | 1 | HEAD AS-OIL FILTER | |
| | 6A | 1 | **118-9145** | 1 | CONNECTOR | |
| | 7 | 1 | **232-3722** | 1 | COOLER GP-ENGINE OIL | |
| | 7A | 1 | **6I-0260** | 10 | BOLT (M8X1.25X25MM) | |
| | 7B | 1 | **6I-4374** | 3 | BOLT | |
| M | 7C | 1 | **101-3895** | 4 | BOLT (M8X1.25X35MM) | |
| | 7D | 1 | **225-6817** | 1 | COOLER-OIL | |
| | 7E | 1 | **225-6818** | 2 | SEAL | |
| | 7F | 1 | **225-6820** | 1 | GASKET | |
| | 8 | 1 | **232-3751** | 1 | PLATE | |
| | 9 | 1 | **232-3861** | 1 | PLUG | |
| | 10 | 1 | **8T-7876** | 1 | SEAL-O-RING | |

M-METRIC PART

*232-6177* **COOLER GP-FLTR BASE & ENG OIL** *(contd.)* **i01998626**

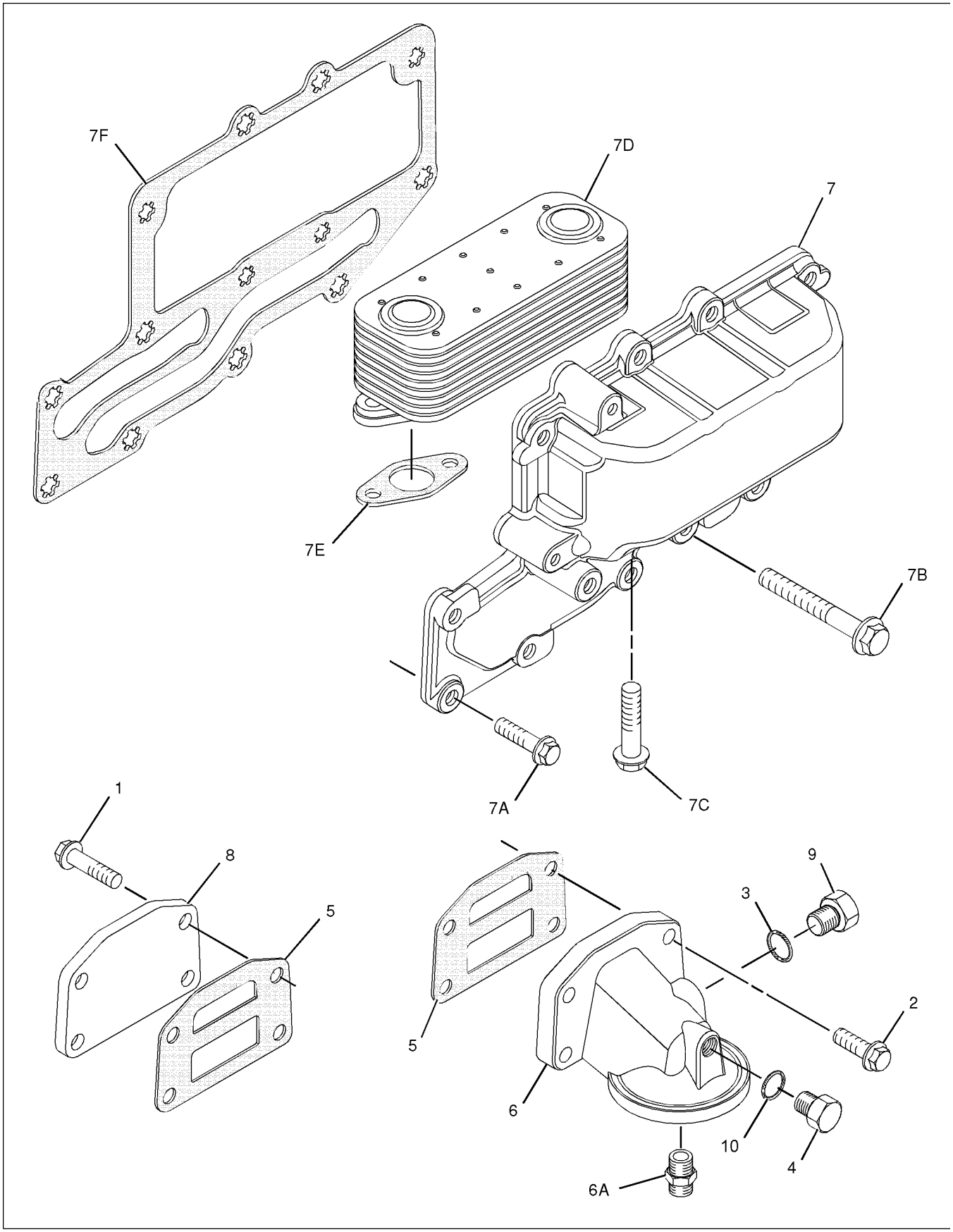


GRAPHIC #1 **<END>** g01029301

# COOLING SYSTEM

## *145-6713* FAN GP-SUCTION

**S/N: BXC1-UP; DSX1-UP**

**PART OF 214-7006 CAB AR, 214-7008 CAB AR-ENCLOSED ROPS, 214-7004 CANOPY AR AN ATTACHMENT**

**SMCS-1356, 1360** **i01644770**

| NOTE | REF NO | GRAPHIC REF | PART NUMBER | QTY | PART NAME 1 2 3 4 5 6 (PRODUCT LEVEL) | SEE PAGE |
|---|---|---|---|---|---|---|
| | 1 | 1 | **5P-4116** | 4 | WASHER-HARD (8.8X20.5X2MM THK) | |
| M | 2 | 1 | **8T-4908** | 6 | BOLT (M8X1.25X25MM) | |
| | 3 | 1 | **127-6980** | 2 | GUARD AS-FAN | |
| | 4 | 1 | **130-3880** | 1 | PULLEY-FAN DRIVE | |
| | 5 | 1 | **142-3388** | 1 | SPACER-FAN | |
| | 6 | 1 | **142-3391** | 1 | SPIDER AS | |
| M | 7 | 1 | **153-3061** | 4 | BOLT-HEX HEAD (M8X1.25X130MM) | |
| | 8 | 1 | **8T-4224** | 6 | WASHER-HARD (8.8X16X2MM THK) | |

M-METRIC PART

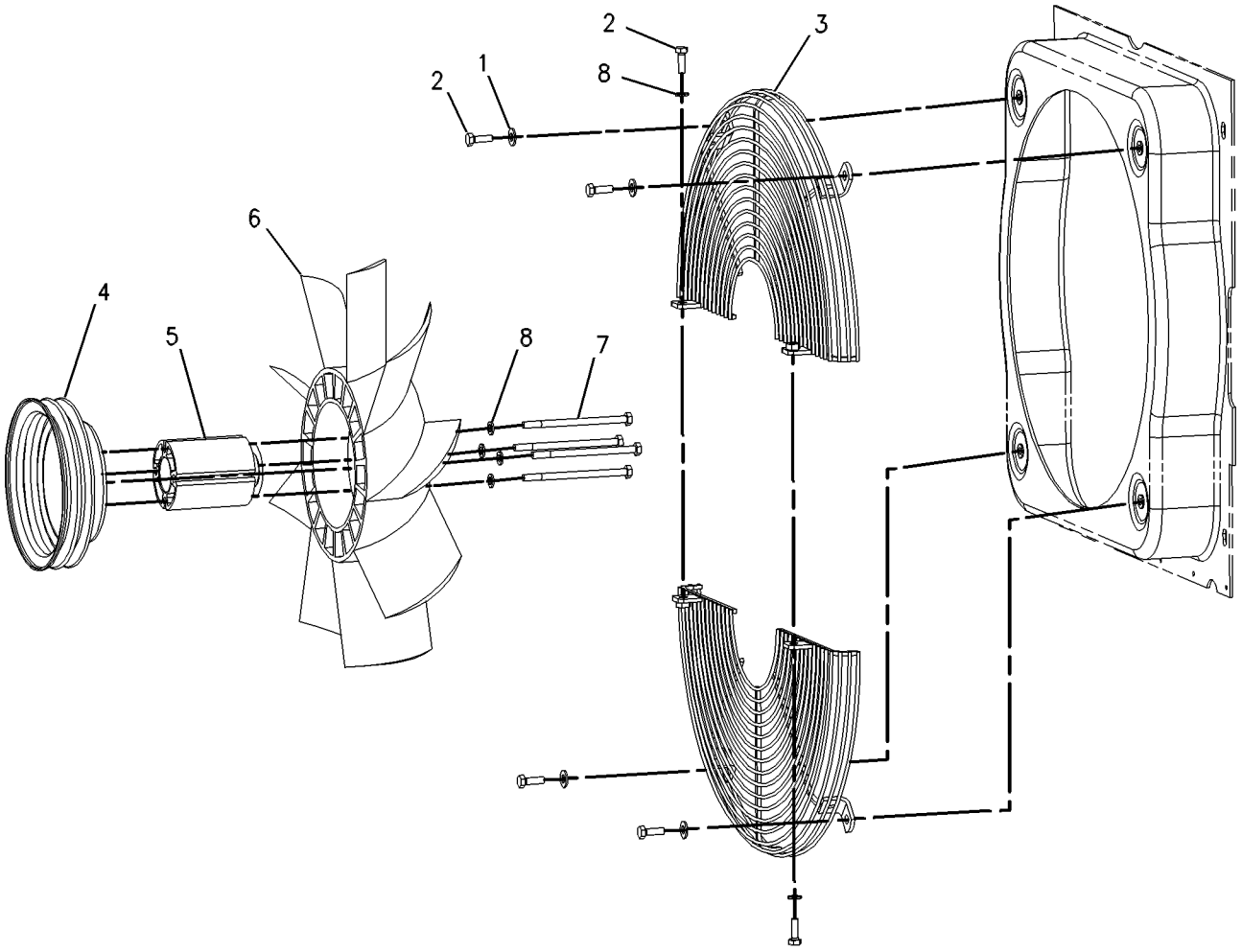


GRAPHIC #1 **<END>** g00367570

# COOLING SYSTEM

## *147-1559* FAN GP-SUCTION

**S/N: BXC1-UP; DSX1-UP**
**PART OF 214-7007 CAB AR, 214-7009 CAB AR-ENCLOSED ROPS**
**AN ATTACHMENT**

**SMCS-1356, 1360** **i02005528**

| NOTE | REF NO | GRAPHIC REF | PART NUMBER | QTY | PART NAME 1 2 3 4 5 6 (PRODUCT LEVEL) | SEE PAGE |
|---|---|---|---|---|---|---|
| | 1 | 1 | **130-3879** | 1 | PULLEY-FAN DRIVE | |
| | 2 | 1 | **142-3388** | 1 | SPACER | |
| | 3 | 1 | **142-3391** | 1 | SPIDER AS (9 BLADES) | |
| | 4 | 1 | **242-9751** | 1 | GUARD AS | |
| M | 5 | 1 | **153-3061** | 4 | BOLT (M8X1.25X130MM) | |
| | 6 | 1 | **5P-4116** | 4 | WASHER-HARD (8.8X20.5X2MM THK) | |
| | 7 | 1 | **8T-4224** | 6 | WASHER-HARD (8.8X16X2MM THK) | |
| M | 8 | 1 | **8T-4908** | 6 | BOLT (M8X1.25X25MM) | |

M-METRIC PART

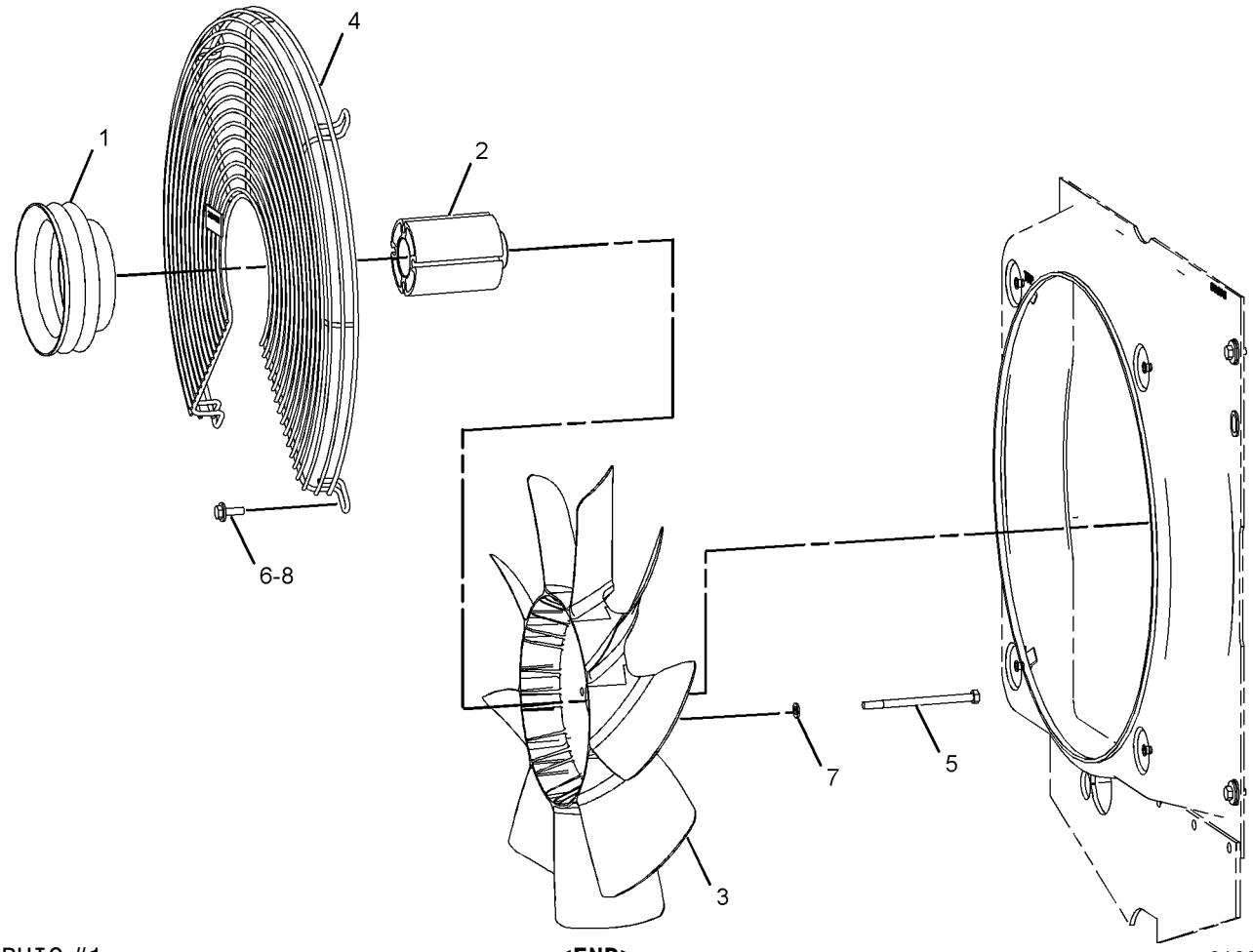


GRAPHIC #1 **<END>** g01037455

# COOLING SYSTEM

## *198-9723* FITTING GP-HEATER & AIR COND

**S/N: BXC1-UP; DSX1-UP**

**PART OF 214-7006, 214-7007 CAB AR, 214-7008, 214-7009 CAB AR-ENCLOSED ROPS AN ATTACHMENT**

**SMCS-7309** **i01484572**

| NOTE | REF NO | GRAPHIC REF | PART NUMBER | QTY | PART NAME 1 2 3 4 5 6 (PRODUCT LEVEL) | SEE PAGE |
|---|---|---|---|---|---|---|
| | 1 | 1 | **6B-4661** | 1 | BUSHING-REDUCER | |
| | 2 | 1 | **8F-8151** | 1 | VALVE-SHUTOFF | |
| | 3 | 1 | **004-6557** | 1 | BUSHING-REDUCER | |
| | 4 | 1 | **004-6810** | 1 | ELBOW | |

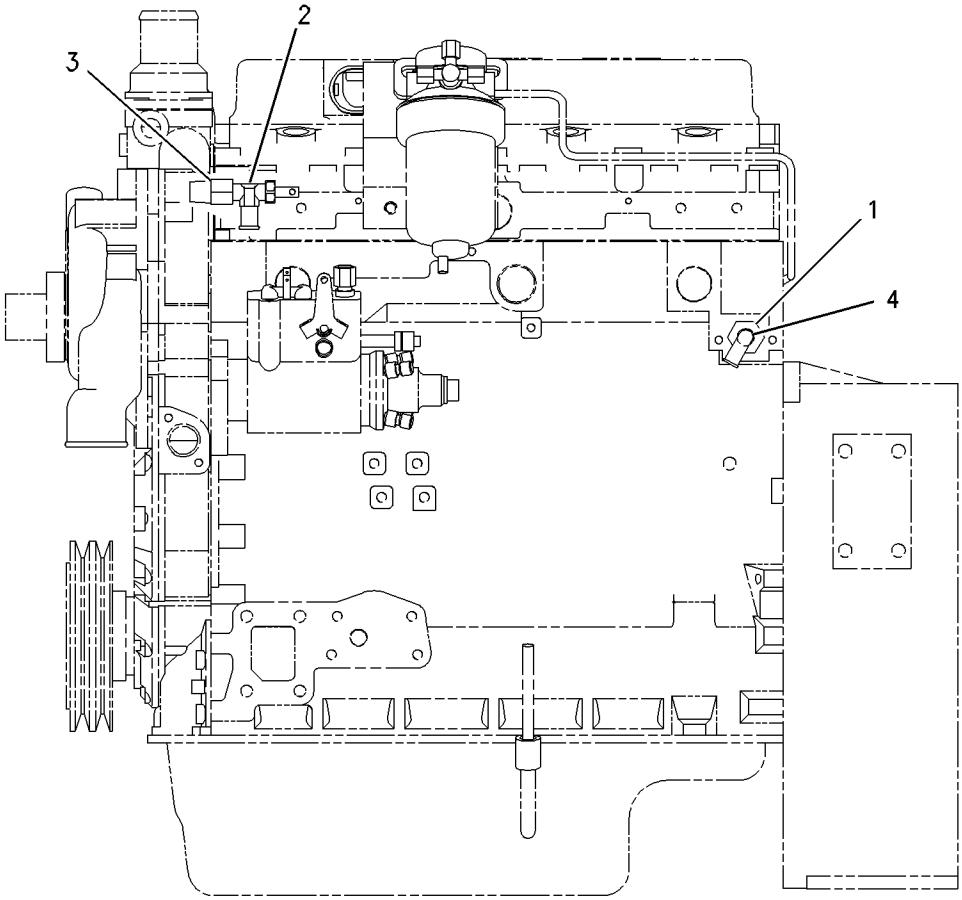


GRAPHIC #1 **<END>** g00772489

# COOLING SYSTEM

## *143-0786* LINES GP-POWER TRAIN COOLER

**S/N: BXC1-UP; DSX1-UP**
**PART OF 214-7012, 214-7014 POWER TRAIN AR**
**AN ATTACHMENT**

**SMCS-1375, 3016** **i01498723**

| NOTE | REF NO | GRAPHIC REF | PART NUMBER | QTY | PART NAME 1 2 3 4 5 6 (PRODUCT LEVEL) | SEE PAGE |
|---|---|---|---|---|---|---|
| B | 1 | 1 | **7K-1181** | 2 | STRAP-CABLE | |
| | 2 | 1 | **118-7286** | 1 | BRACKET AS | |
| | 3 | 1 | **130-9984** | 2 | CLIP (SLOT) | |
| | 4 | 1 | **138-6904** | 1 | HOSE AS | |
| | 5 | 1 | **138-6913** | 1 | HOSE AS | |
| | 6 | 1 | **159-0186** | 2 | CLAMP | |
| | 7 | 1 | *148-8339* | 1 | CONNECTOR GP | |
| | | 1 | **6V-8716** | 1 | CONNECTOR | |
| | | 1 | **6V-9746** | 1 | SEAL-O-RING | |
| | | 1 | **7M-8485** | 1 | SEAL-O-RING | |
| | 8 | 1 | *148-8360* | 1 | ELBOW GP | |
| | | 1 | **6V-9182** | 1 | ELBOW | |
| | | 1 | **6V-9746** | 1 | SEAL-O-RING | |
| | | 1 | **7M-8485** | 1 | SEAL-O-RING | |
| | 9 | 1 | **5P-4116** | 2 | WASHER-HARD (8.8X20.5X2MM THK) | |
| | 10 | 1 | **8T-4121** | 2 | WASHER-HARD (11X21X2.5MM THK) | |
| M | 11 | 1 | **8T-4136** | 1 | BOLT (M10X1.5X25MM) | |
| M | 12 | 1 | **8T-4137** | 1 | BOLT (M10X1.5X20MM) | |
| M | 13 | 1 | **8T-4189** | 2 | BOLT (M8X1.25X20MM) | |
| M | 14 | 1 | **8T-4192** | 2 | BOLT (M12X1.75X25MM) | |
| | 15 | 1 | **8T-4223** | 2 | WASHER-HARD (13.5X25.5X3MM THK) | |
| | 16 | 1 | **8T-7529** | 3 | CLIP (SLOT) | |

B-USE AS REQUIRED
M-METRIC PART

*143-0786* **LINES GP-POWER TRAIN COOLER** *(contd.)* **i01498723**

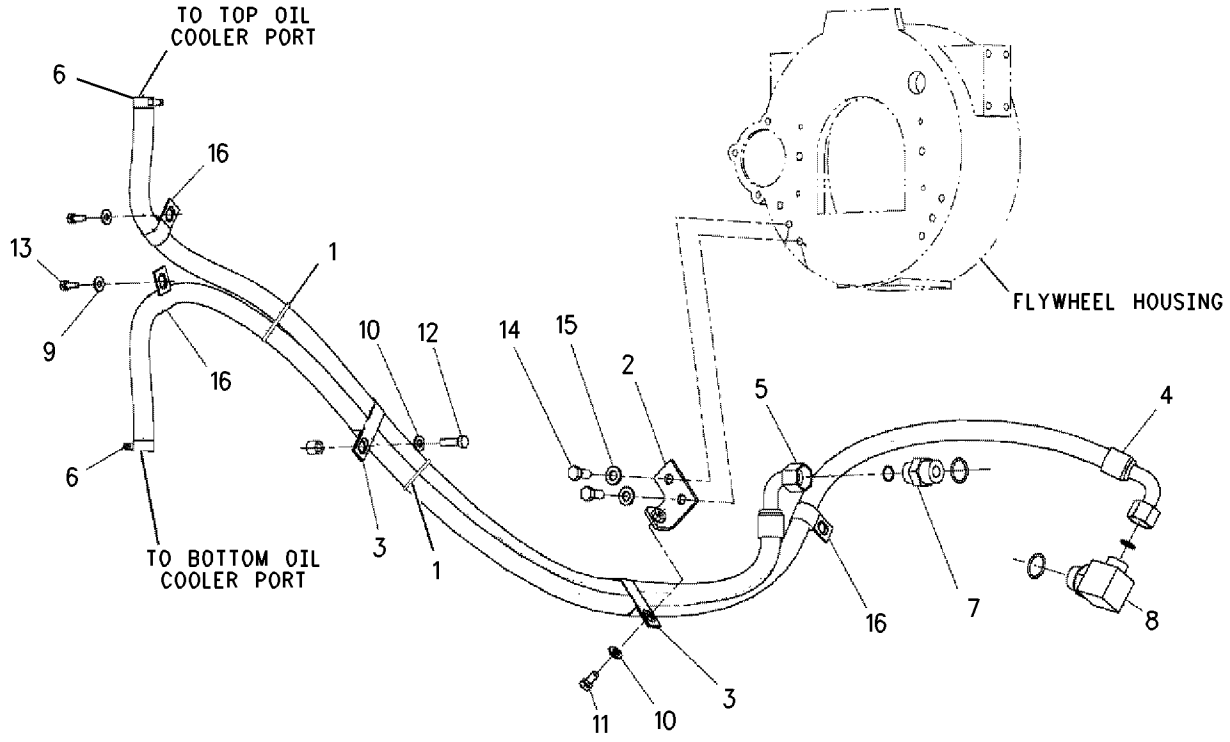


GRAPHIC #1 **<END>** g00777719

# COOLING SYSTEM

## *143-0789* LINES GP-POWER TRAIN COOLER—POWER SHIFT

**S/N: BXC1-UP; DSX1-UP**
**PART OF 214-7013, 214-7015 POWER TRAIN AR**
**AN ATTACHMENT**

**SMCS-1375, 3016** **i01776282**

| NOTE | REF NO | GRAPHIC REF | PART NUMBER | QTY | PART NAME 1 2 3 4 5 6 (PRODUCT LEVEL) | SEE PAGE |
|---|---|---|---|---|---|---|
| E | 1 | 1 | **136-1955** | 2 | HOSE (77CM) | |
| | 2 | 1 | **7K-1181** | 1 | STRAP-CABLE | |
| | 3 | 1 | **118-7286** | 1 | BRACKET AS | |
| | 4 | 1 | **130-9984** | 2 | CLIP | |
| | 5 | 1 | **138-6914** | 1 | HOSE AS | |
| | 6 | 1 | **150-3370** | 1 | REGULATOR AS-TMSN TEMPERATURE | |
| | | 1 | **154-0875** | 1 | SEAL-O-RING | |
| | 7 | 1 | **150-3374** | 1 | MANIFOLD | |
| | 8 | 1 | **153-3761** | 1 | HOSE AS | |
| | 9 | 1 | **159-0186** | 6 | CLAMP | |
| | 10 | 1 | *148-8339* | 1 | CONNECTOR GP | |
| | | 1 | **6V-8716** | 1 | CONNECTOR | |
| | | 1 | **6V-9746** | 1 | SEAL-O-RING | |
| | | 1 | **7M-8485** | 1 | SEAL-O-RING | |
| | 11 | 1 | *148-8360* | 1 | ELBOW GP | |
| | | 1 | **6V-9182** | 1 | ELBOW | |
| | | 1 | **6V-9746** | 1 | SEAL-O-RING | |
| | | 1 | **7M-8485** | 1 | SEAL-O-RING | |
| | 12 | 1 | *153-9909* | 1 | FITTING AS | |
| | | 1 | **3E-4075** | 1 | FITTING | |
| | | 1 | **3D-2824** | 1 | SEAL-O-RING | |
| | 13 | 1 | *153-9910* | 1 | ELBOW AS | |
| | | 1 | **032-8487** | 1 | ELBOW | |
| | | 1 | **3D-2824** | 1 | SEAL-O-RING | |
| | 14 | 1 | *153-9911* | 2 | FITTING AS | |
| | | | | | (EACH INCLUDES) | |
| | | 1 | **033-6783** | 1 | FITTING | |
| | | 1 | **3D-2824** | 1 | SEAL-O-RING | |
| | 15 | 1 | **5P-4116** | 2 | WASHER-HARD (8.8X20.5X2MM THK) | |
| | 16 | 1 | **7X-7729** | 4 | WASHER (11X25X3MM THK) | |
| M | 17 | 1 | **8T-4136** | 1 | BOLT (M10X1.5X25MM) | |
| M | 18 | 1 | **8T-4137** | 1 | BOLT (M10X1.5X20MM) | |
| M | 19 | 1 | **8T-4189** | 2 | BOLT (M8X1.25X20MM) | |
| M | 20 | 1 | **8T-4192** | 2 | BOLT (M12X1.75X25MM) | |
| | 21 | 1 | **8T-4223** | 2 | WASHER-HARD (13.5X25.5X3MM THK) | |
| M | 22 | 1 | **8T-6466** | 2 | BOLT (M10X1.50X60MM) | |
| | 23 | 1 | **8T-7529** | 3 | CLIP (SLOT) | |

E-ORDER BY THE CENTIMETER
M-METRIC PART

*143-0789* **LINES GP-POWER TRAIN COOLER** *(contd.)* **i01776282**

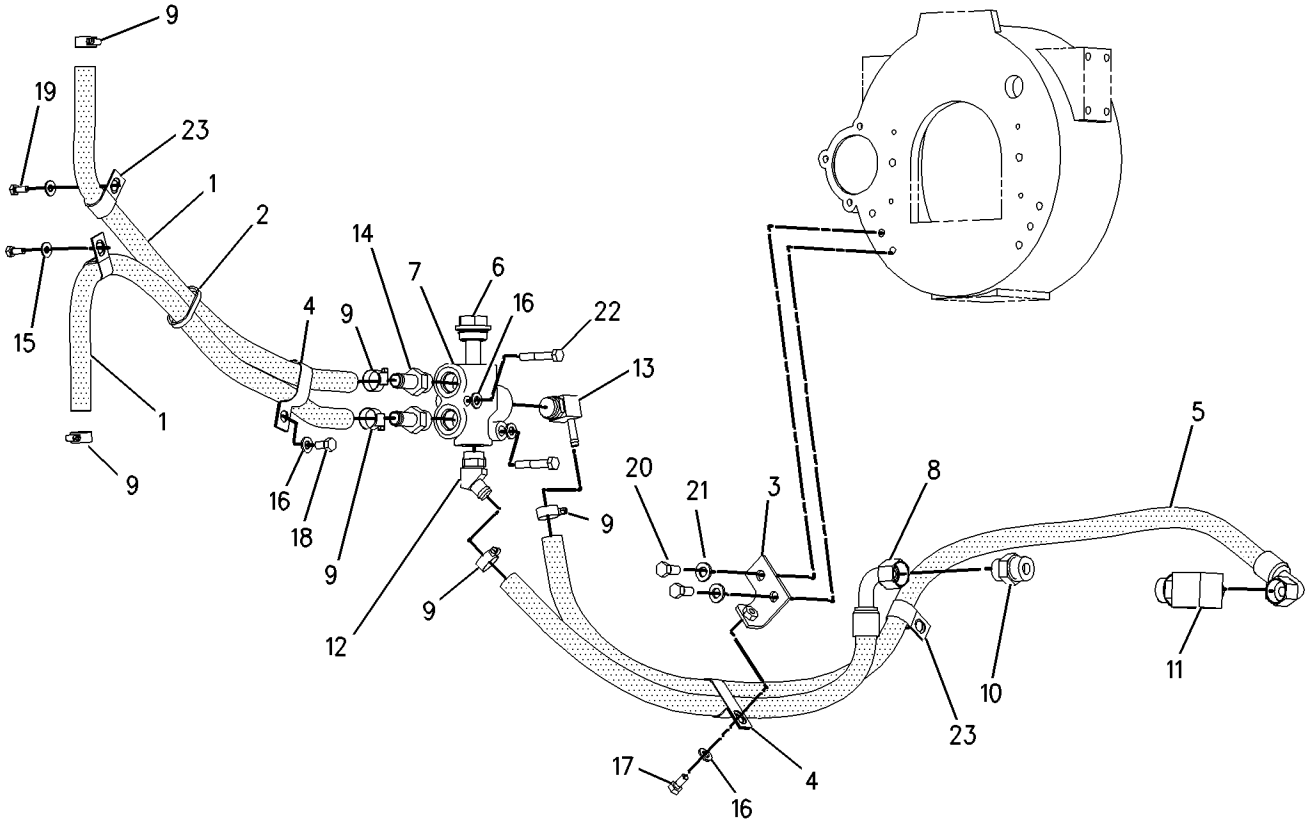


GRAPHIC #1 **<END>** g00908151

# COOLING SYSTEM

## *230-7355* PUMP GP-WATER

**S/N: CRS1-UP**

**PART OF 234-3059, 234-3061 ENGINE AR-PRIMARY**

**AN ATTACHMENT**

**SMCS-1361** **i01896488**

| NOTE | REF NO | GRAPHIC REF | PART NUMBER | QTY | PART NAME 1 2 3 4 5 6 (PRODUCT LEVEL) | SEE PAGE |
|---|---|---|---|---|---|---|
| | 1 | 1 | **6I-0217** | 2 | BOLT (M8X1.25X20MM) | |
| | 2 | 1 | **6I-0254** | 2 | BOLT (M8X1.25X30MM) | |
| | 3 | 1 | **100-3751** | 5 | BOLT (M8X1.25X65MM) | |
| | 4 | 1 | **113-8129** | 2 | BOLT (M8X75MM) | |
| | 5 | 1 | **225-7741** | 1 | CONNECTION AS | |
| | 6 | 1 | **225-7738** | 1 | SEAL-O-RING | |
| | 7 | 1 | **225-7739** | 1 | SEAL-O-RING | |
| | 8 | 1 | **225-8016** | 1 | PUMP GP-WATER | |
| | 9 | 1 | **225-8019** | 1 | GASKET | |

*230-7355* **PUMP GP-WATER** *(contd.)* **i01896488**

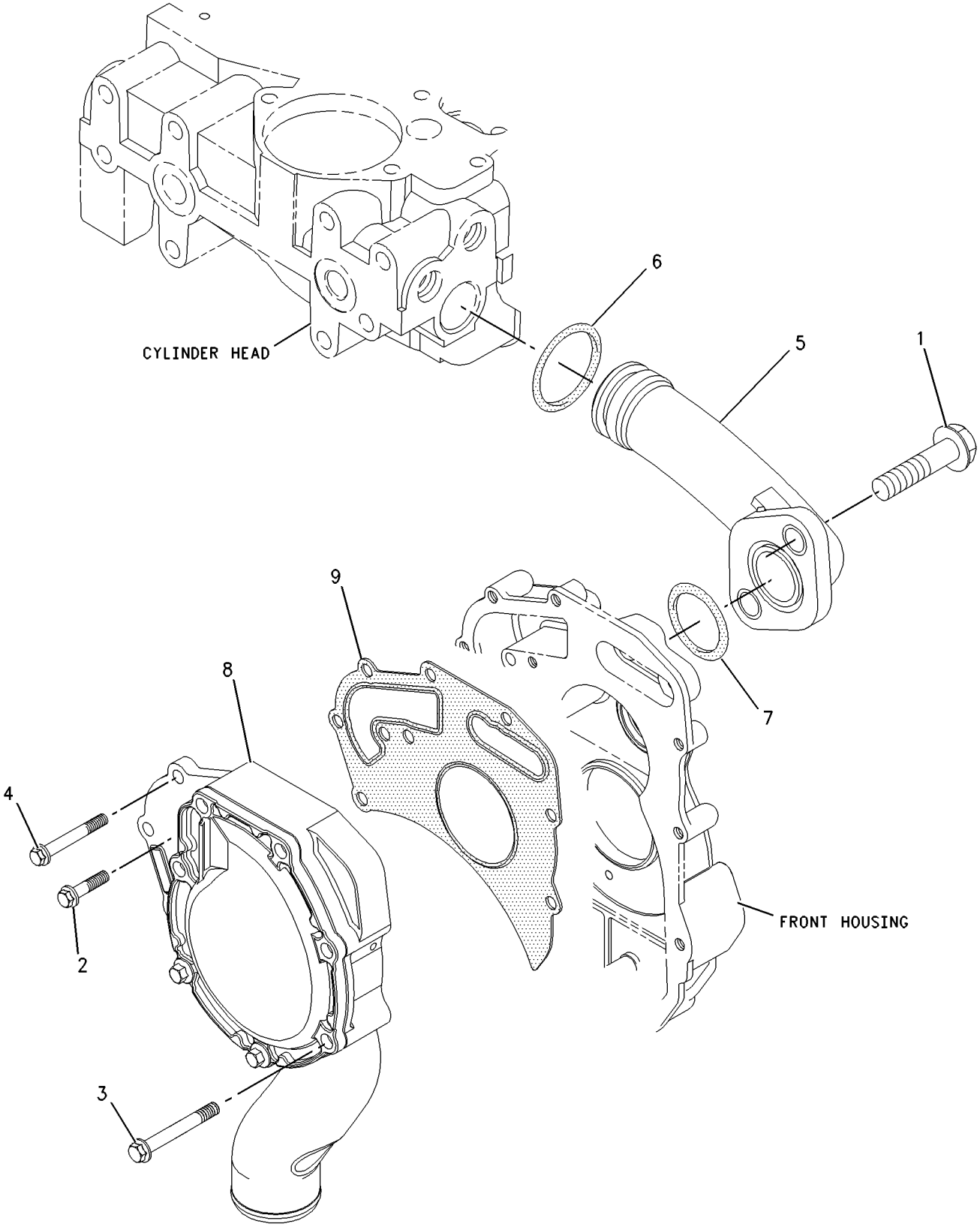


GRAPHIC #1 **<END>** g00912411

# COOLING SYSTEM

## *234-7834* RADIATOR & FAN GP

**S/N: BXC1-UP; DSX1-UP**
**PART OF 234-7836 RADIATOR & HYD OIL COOLER GP**
**AN ATTACHMENT**

**SMCS-1353, 1356** **i01989362**

| NOTE | REF NO | GRAPHIC REF | PART NUMBER | QTY | PART NAME 1 2 3 4 5 6 (PRODUCT LEVEL) | SEE PAGE |
|---|---|---|---|---|---|---|
| | 1 | 1 | **123-4065** | 6 | RIVET-POP | |
| | 2 | 1 | **141-7512** | 1 | BAFFLE | |
| | 3 | 1 | **180-2441** | 1 | SHROUD AS | |
| Y | 4 | 1 | **235-1974** | 1 | RADIATOR & HYD OIL COOLER GP | 69 |
| | 5 | 1 | **7X-0579** | 4 | WASHER-HARD (8.8X25.5X2MM THK) | |
| M | 6 | 1 | **8T-4200** | 4 | BOLT (M8X1.25X16MM) | |

M-METRIC PART
Y-SEPARATE ILLUSTRATION

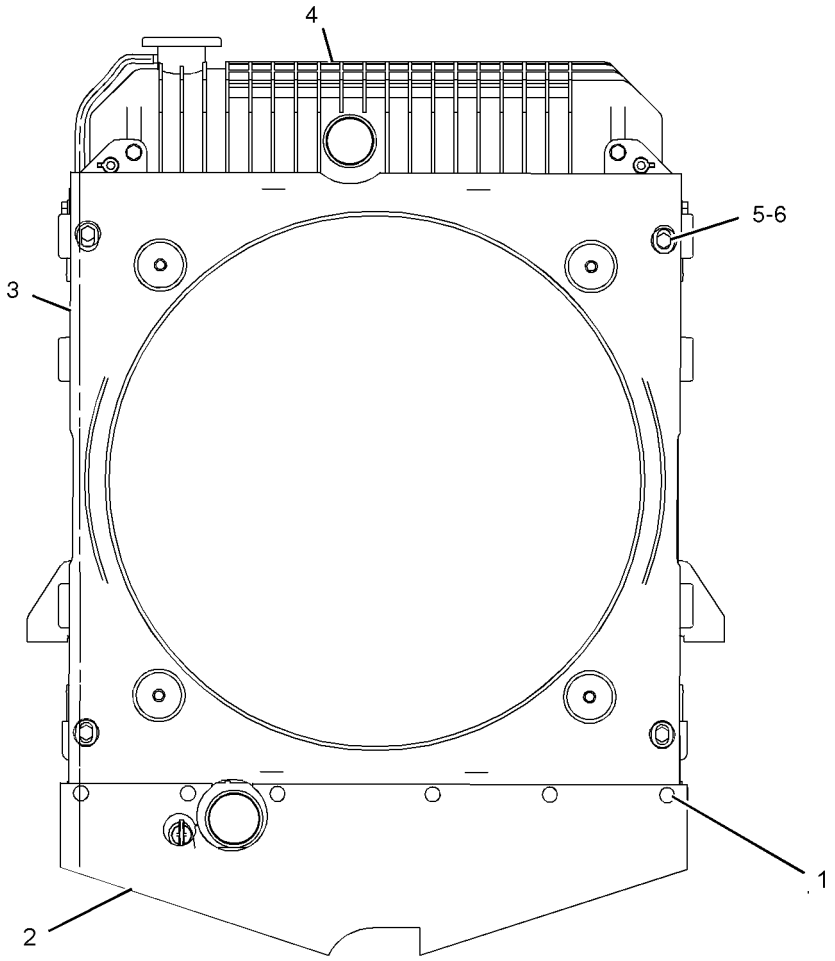


GRAPHIC #1 **<END>** g01030668

# COOLING SYSTEM

## *236-5808* RADIATOR & FAN GP

**S/N: BXC1-UP; DSX1-UP**
**PART OF 236-5807 RADIATOR & HYD OIL COOLER GP**
**AN ATTACHMENT**

**SMCS-1353, 1356** **i01989357**

| NOTE | REF NO | GRAPHIC REF | PART NUMBER | QTY | PART NAME 1 2 3 4 5 6 (PRODUCT LEVEL) | SEE PAGE |
|---|---|---|---|---|---|---|
| | 1 | 1 | **123-4065** | 6 | RIVET-POP | |
| | 2 | 1 | **141-7512** | 1 | BAFFLE | |
| | 3 | 1 | **180-2441** | 1 | SHROUD AS | |
| | | 1 | **214-3520** | 4 | NUT-SHOULDER | |
| Y | 4 | 1 | **236-5809** | 1 | RADIATOR & HYD OIL COOLER GP | 72 |
| | 5 | 1 | **7X-0579** | 4 | WASHER-HARD (8.8X25.5X2MM THK) | |
| M | 6 | 1 | **8T-4200** | 4 | BOLT (M8X1.25X16MM) | |

M-METRIC PART
Y-SEPARATE ILLUSTRATION

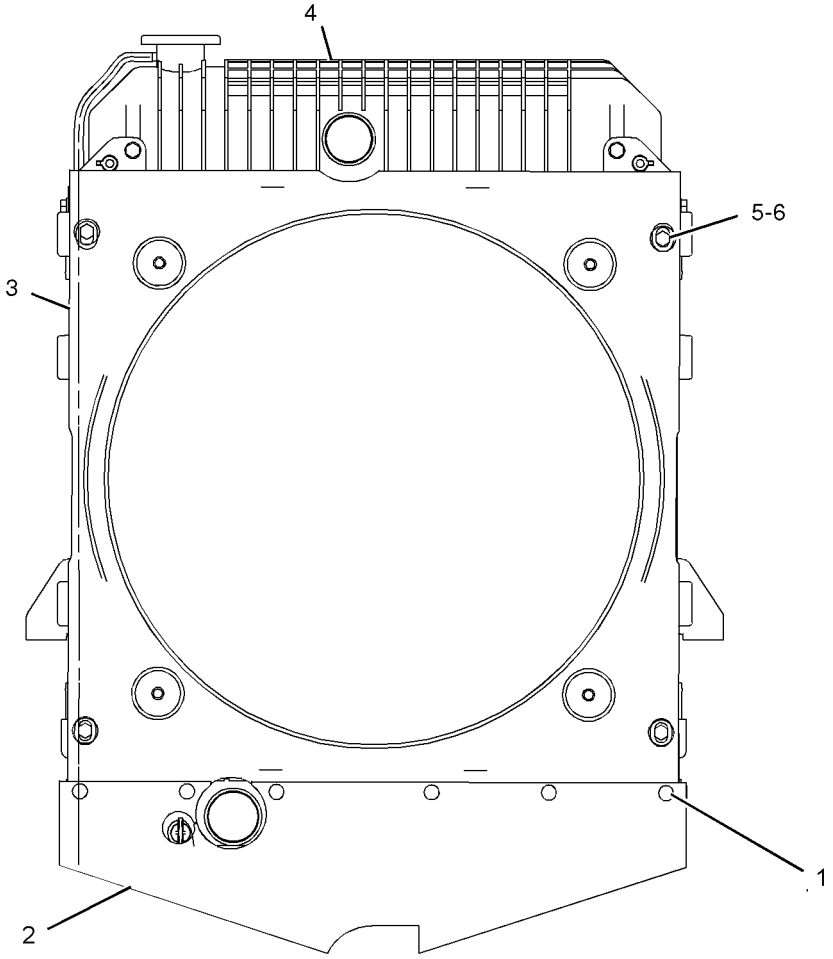


GRAPHIC #1 **<END>** g01030773

# COOLING SYSTEM

## *234-7836* RADIATOR & HYD OIL COOLER GP

**S/N: BXC1-UP; DSX1-UP**

**AN ATTACHMENT**

**SMCS-1353, 1374** **i01967456**

| NOTE | REF NO | GRAPHIC REF | PART NUMBER | QTY | PART NAME 1 2 3 4 5 6 (PRODUCT LEVEL) | SEE PAGE |
|---|---|---|---|---|---|---|
| D | 1 | 1 | **5P-6129** | | TUBE (.1M) | |
| | 2 | 1 | **2W-9710** | 2 | MOUNT AS | |
| | 3 | 1 | **6N-6984** | 2 | MOUNT | |
| | 4 | 1 | **140-3640** | 2 | PLATE | |
| | 5 | 1 | **214-7457** | 2 | CLAMP-T'BOLT | |
| | 6 | 1 | **214-7458** | 2 | CLAMP-T'BOLT | |
| Y | 7 | 1 | *234-7834* | 1 | RADIATOR & FAN GP | 65 |
| | 8 | 1 | **235-1966** | 1 | HOSE | |
| | 9 | 1 | **235-1967** | 1 | HOSE | |
| | 10 | 1 | **7X-0603** | 2 | WASHER-HARD (9.9X35X2.5MM THK) | |
| M | 11 | 1 | **8T-4133** | 2 | NUT (M10X1.5 THD) | |
| M | 12 | 1 | **8T-4186** | 2 | BOLT (M10X1.5X40MM) | |
| | 13 | 1 | **8T-4222** | 4 | WASHER-PLATED (11X32X2.5MM THK) | |
| M | 14 | 1 | **8T-4908** | 2 | BOLT (M8X1.25X25MM) | |

D-ORDER BY THE METER
M-METRIC PART
Y-SEPARATE ILLUSTRATION

*234-7836* **RADIATOR & HYD OIL COOLER GP** *(contd.)* **i01967456**

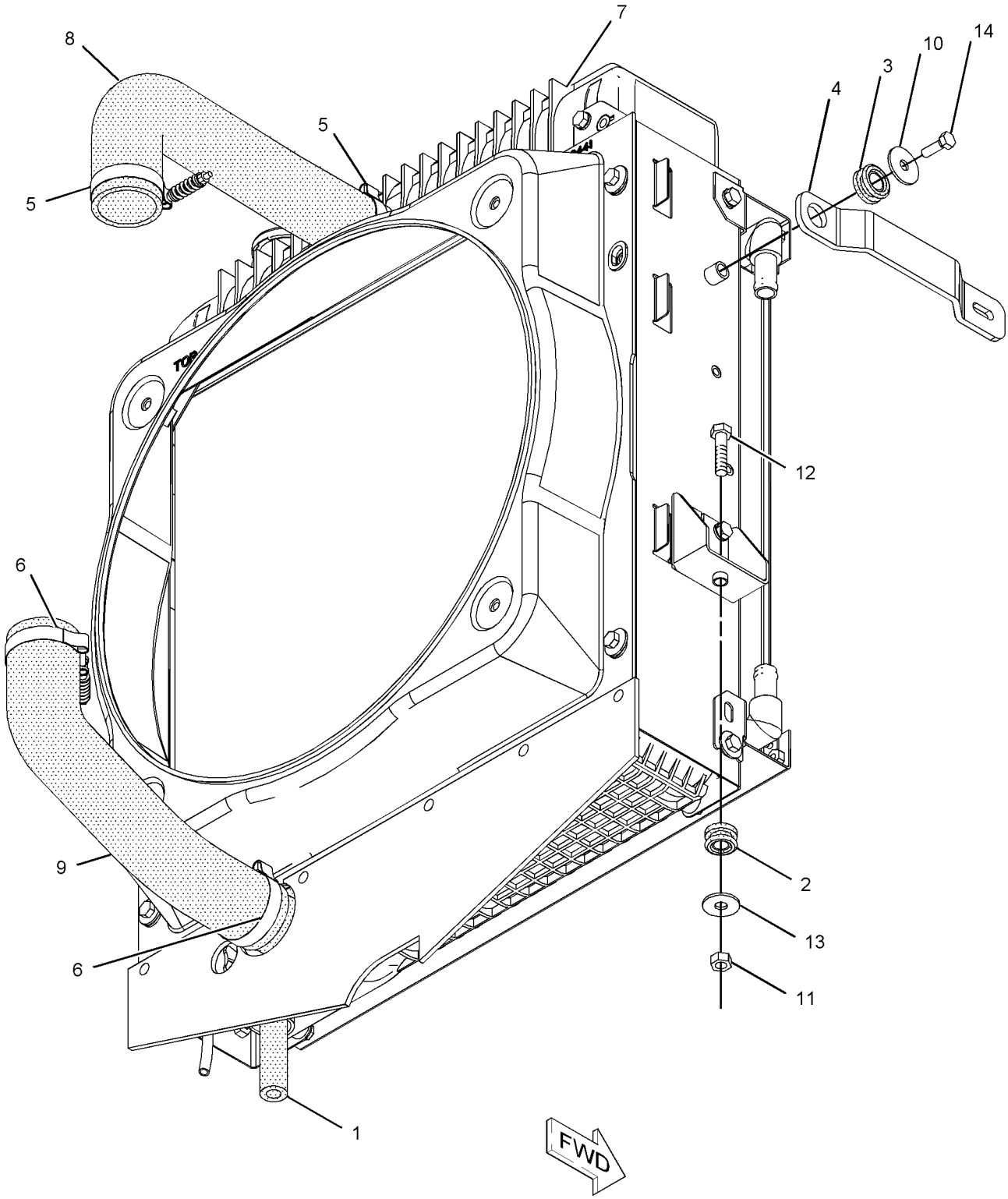


GRAPHIC #1 **<END>** g01022788

# COOLING SYSTEM

## 235-1974 RADIATOR & HYD OIL COOLER GP

**S/N: BXC1-UP; DSX1-UP**
**PART OF 234-7834 RADIATOR & FAN GP**
**AN ATTACHMENT**

**SMCS-1353, 1374** **i01967451**

| NOTE | REF NO | GRAPHIC REF | PART NUMBER | QTY | PART NAME 1 2 3 4 5 6 (PRODUCT LEVEL) | SEE PAGE |
|---|---|---|---|---|---|---|
| | 1 | 1 | **8C-0572** | 2 | WASHER (8.8X25.5X2MM THK) | |
| | 2 | 1 | **140-3634** | 1 | RADIATOR AS | |
| | 2A | 1 | **140-2358** | 1 | PLUG AS | |
| | | 1 | **2D-6392** | 1 | SEAL-O-RING | |
| | | 1 | **5F-9144** | 1 | SEAL-O-RING | |
| | | 1 | **145-6005** | 2 | GASKET | |
| | 3 | 1 | **142-0724** | 1 | COOLER AS-OIL (HYDRAULIC, TRANSMISSION) | |
| | 3A | 1 | **123-4065** | 16 | RIVET-POP | |
| | 3B | 1 | **140-3635** | 1 | CORE AS (13 PLATE) (TRANSMISSION) | |
| | 3C | 1 | **140-3639** | 1 | CORE AS (15 PLATE) (HYDRAULIC) | |
| | 4 | 1 | **151-8752** | 2 | BUSHING | |
| | 5 | 1 | **227-4376** | 1 | CAP AS (RADIATOR) | |
| M | 6 | 1 | **8T-4200** | 4 | BOLT (M8X1.25X16MM) | |
| | 7 | 1 | **8T-4224** | 2 | WASHER-HARD (8.8X16X2MM THK) | |

M-METRIC PART

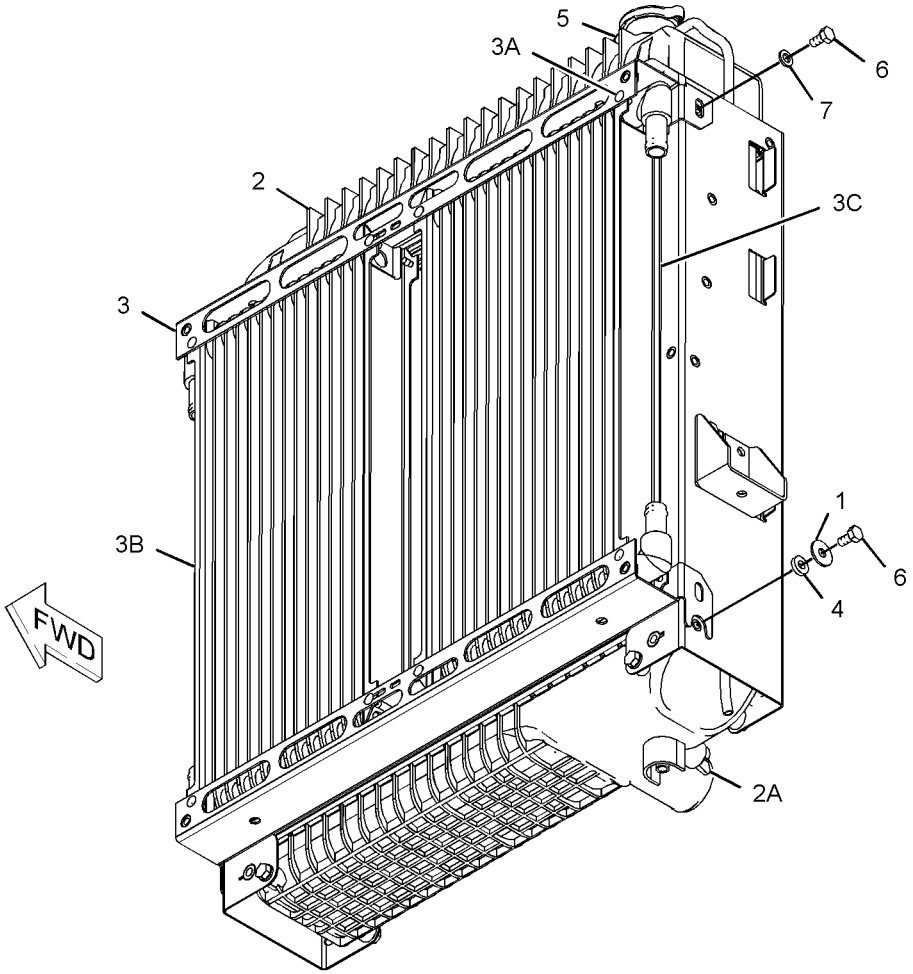


GRAPHIC #1 **<END>** g01024633

# COOLING SYSTEM

## *236-5807* RADIATOR & HYD OIL COOLER GP

**S/N: BXC1-UP; DSX1-UP**

**AN ATTACHMENT**

**SMCS-1353, 1374** **i01970247**

| NOTE | REF NO | GRAPHIC REF | PART NUMBER | QTY | PART NAME 1 2 3 4 5 6 (PRODUCT LEVEL) | SEE PAGE |
|---|---|---|---|---|---|---|
| D | 1 | 1 | **5P-6129** | | TUBE (.1M) | |
| | 2 | 1 | **2W-9710** | 2 | MOUNT AS | |
| | 3 | 1 | **6N-6984** | 2 | MOUNT | |
| | 4 | 1 | **140-3640** | 2 | PLATE | |
| | 5 | 1 | **214-7457** | 2 | CLAMP-T'BOLT | |
| | 6 | 1 | **214-7458** | 2 | CLAMP-T'BOLT | |
| | 7 | 1 | **235-1966** | 1 | HOSE | |
| | 8 | 1 | **235-1967** | 1 | HOSE | |
| Y | 9 | 1 | *236-5808* | 1 | RADIATOR & FAN GP | 66 |
| | 10 | 1 | **7X-0603** | 2 | WASHER-HARD (9.9X35X2.5MM THK) | |
| M | 11 | 1 | **8T-4133** | 2 | NUT (M10X1.5 THD) | |
| M | 12 | 1 | **8T-4186** | 2 | BOLT (M10X1.5X40MM) | |
| | 13 | 1 | **8T-4222** | 4 | WASHER-PLATED (11X32X2.5MM THK) | |
| M | 14 | 1 | **8T-4908** | 2 | BOLT (M8X1.25X25MM) | |

D-ORDER BY THE METER
M-METRIC PART
Y-SEPARATE ILLUSTRATION

*236-5807* **RADIATOR & HYD OIL COOLER GP** *(contd.)* **i01970247**

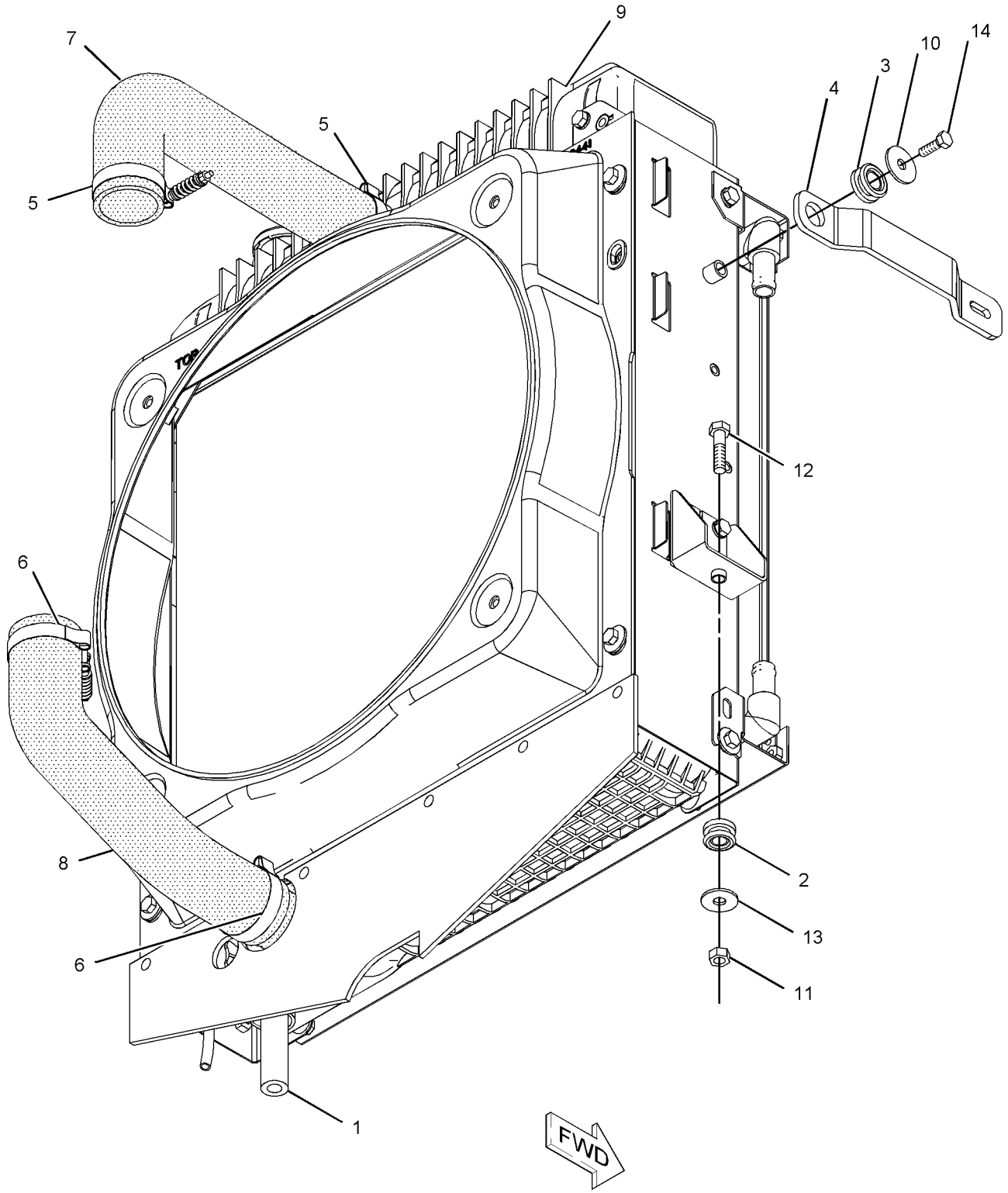


GRAPHIC #1 **<END>** g01023383

# *236-5809* RADIATOR & HYD OIL COOLER GP

**S/N: BXC1-UP; DSX1-UP**
**PART OF 236-5808 RADIATOR & FAN GP**
**AN ATTACHMENT**

**SMCS-1353, 1374** **i01994427**

| NOTE | REF NO | GRAPHIC REF | PART NUMBER | QTY | PART NAME 1 2 3 4 5 6 (PRODUCT LEVEL) | SEE PAGE |
|---|---|---|---|---|---|---|
| | 1 | 1 | **8C-0572** | 2 | WASHER (8.8X25.5X2MM THK) | |
| | 2 | 1 | **140-3634** | 1 | RADIATOR AS | |
| | | 1 | **140-2358** | 1 | PLUG AS | |
| | | 1 | **2D-6392** | 1 | SEAL-O-RING | |
| | | 1 | **5F-9144** | 1 | SEAL-O-RING | |
| | | 1 | **145-6005** | 2 | GASKET | |
| | 3 | 1 | **151-8752** | 2 | BUSHING | |
| | 4 | 1 | **227-4376** | 1 | CAP AS (RADIATOR) | |
| | 5 | 1 | **235-1975** | 1 | COOLER AS-OIL | |
| | | 1 | **123-4065** | 16 | RIVET-POP | |
| M | 6 | 1 | **8T-4200** | 4 | BOLT (M8X1.25X16MM) | |
| | 7 | 1 | **8T-4224** | 2 | WASHER-HARD (8.8X16X2MM THK) | |

M-METRIC PART

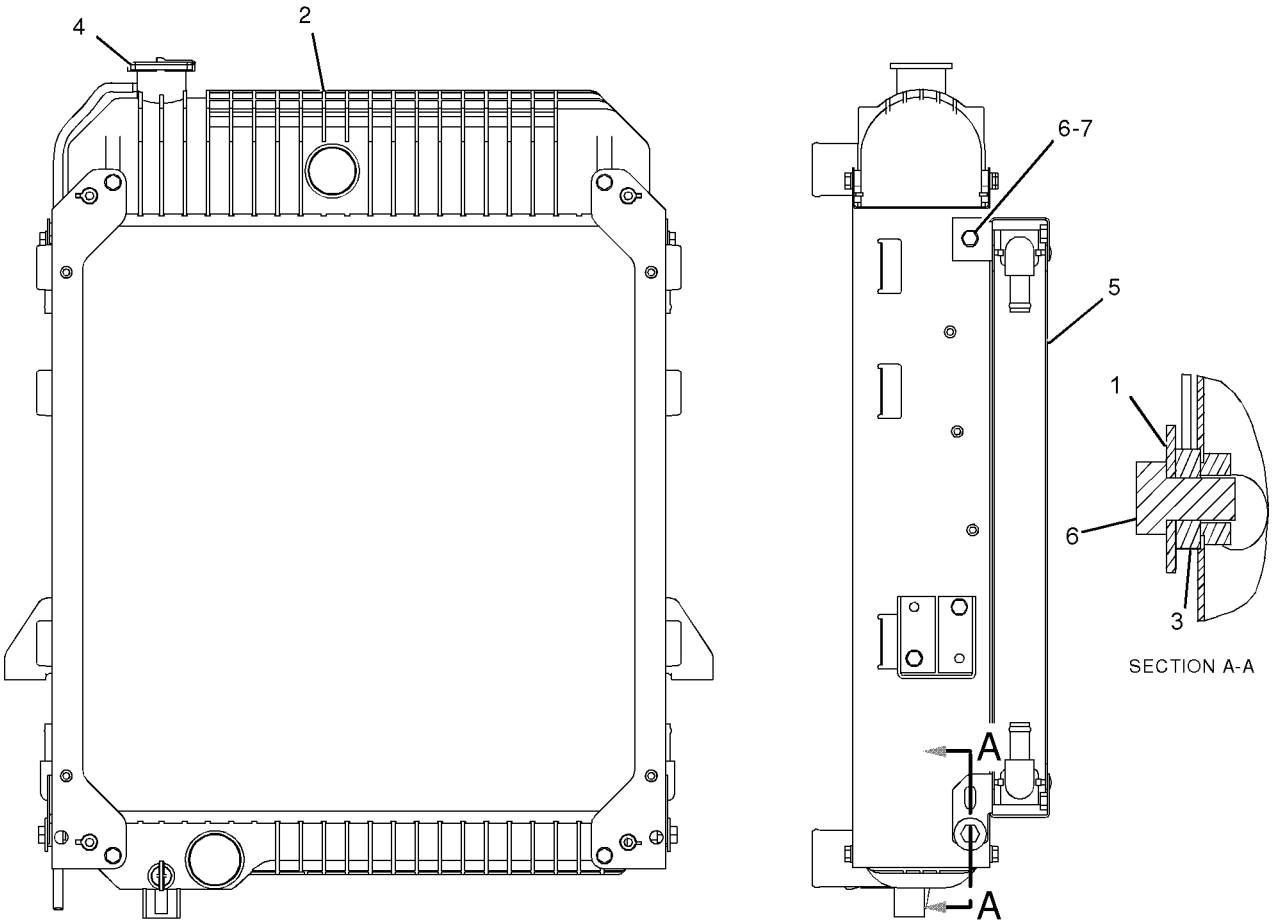


GRAPHIC #1 **<END>** g01032227

# AIR INLET AND EXHAUST SYSTEM

## *234-1979* AIR CLEANER GP

**S/N: BXC1-UP; DSX1-UP**
**PART OF 214-6891, 214-6893 ENGINE AR**
**AN ATTACHMENT**

**SMCS-1051, 1054** **i01998400**

| NOTE | REF NO | GRAPHIC REF | PART NUMBER | QTY | PART NAME 1 2 3 4 5 6 (PRODUCT LEVEL) | SEE PAGE |
|---|---|---|---|---|---|---|
| D | 1 | 1 | **8T-2563** | | SEAL (0.7M) | |
| | 2 | 1 | **5P-0600** | 1 | CLAMP-HOSE | |
| | 3 | 1 | **5P-4868** | 1 | CLAMP-HOSE | |
| | 4 | 1 | **6V-3582** | 1 | CLAMP-HOSE | |
| | 5 | 1 | **110-2445** | 1 | CLAMP-HOSE | |
| | 6 | 1 | **127-4471** | 1 | CLAMP-HOSE | |
| Y | 7 | 1 | **234-1981** | 1 | AIR CLEANER GP | 75 |
| | 8 | 1 | **234-2622** | 1 | HOSE-AIR | |
| | 9 | 1 | **234-5121** | 1 | HOSE-AIR | |
| | 10 | 1 | **238-9192** | 1 | PLATE AS | |
| | 11 | 1 | **242-1920** | 1 | DUCT AS (AIR INTAKE) | |
| M | 12 | 1 | **8T-4189** | 2 | BOLT (M8X1.25X20MM) | |
| | 13 | 1 | **8T-4224** | 6 | WASHER-HARD (8.8X16X2MM THK) | |
| M | 14 | 1 | **8T-7547** | 4 | BOLT (M8X1.25X30MM) | |

D-ORDER BY THE METER
M-METRIC PART
Y-SEPARATE ILLUSTRATION

*234-1979* **AIR CLEANER GP** *(contd.)* **i01998400**

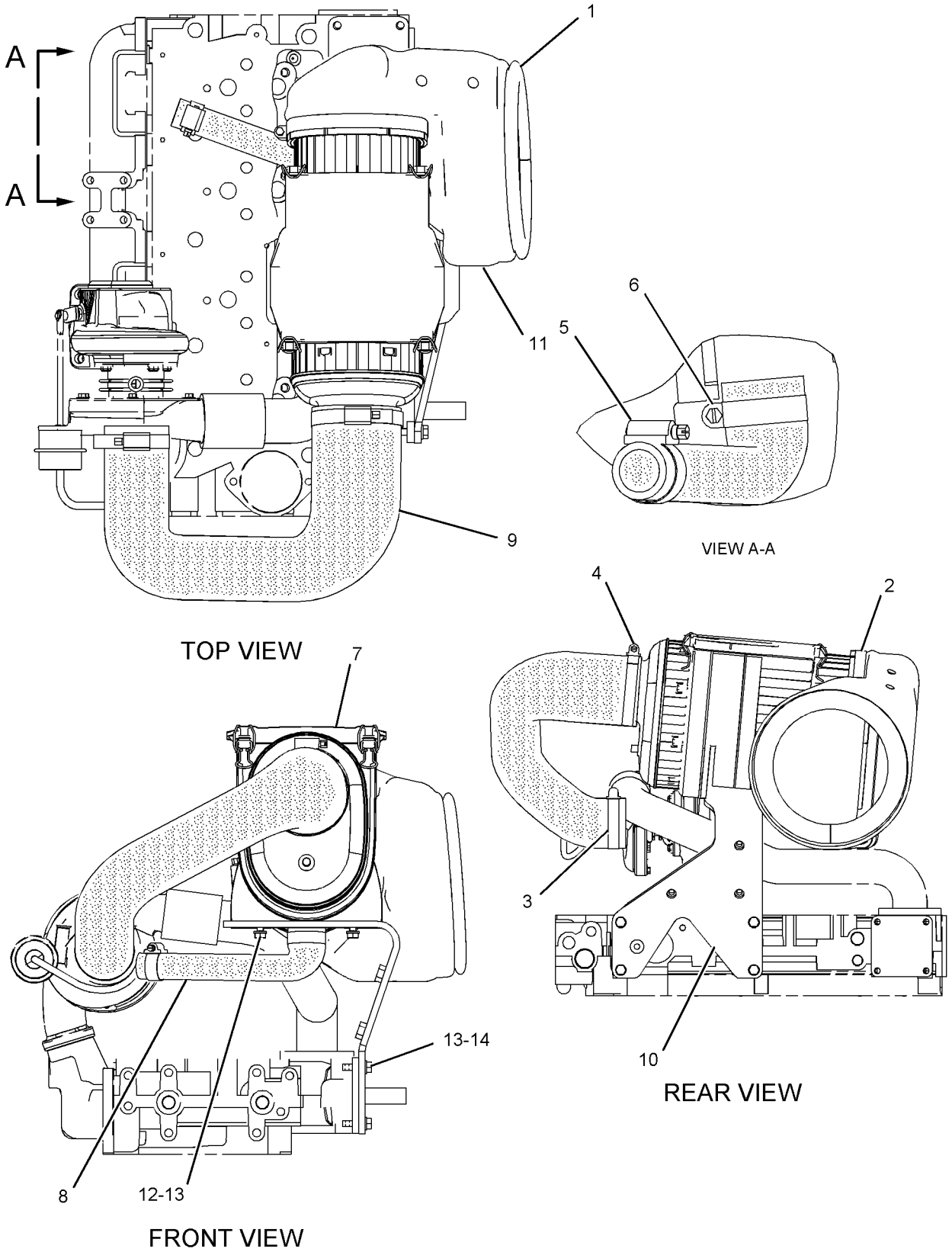


GRAPHIC #1 **<END>** g01035153

# AIR INLET AND EXHAUST SYSTEM

## 234-1981 AIR CLEANER GP

**S/N: BXC1-UP; DSX1-UP**
**PART OF 234-1979 AIR CLEANER GP**
**AN ATTACHMENT**

**SMCS-1051, 1054** **i01998481**

| NOTE | REF NO | GRAPHIC REF | PART NUMBER | QTY | PART NAME 1 2 3 4 5 6 (PRODUCT LEVEL) | SEE PAGE |
|---|---|---|---|---|---|---|
| | 1 | 1 | **227-7447** | 1 | FRAME (ELEMENT) | |
| | 2 | 1 | **227-7448** | 1 | ELEMENT-PRIMARY | |
| | 3 | 1 | **227-7449** | 1 | FILTER ELEMENT AS-AIR (SECONDARY) | |
| | 4 | 1 | **237-4157** | 1 | COVER | |

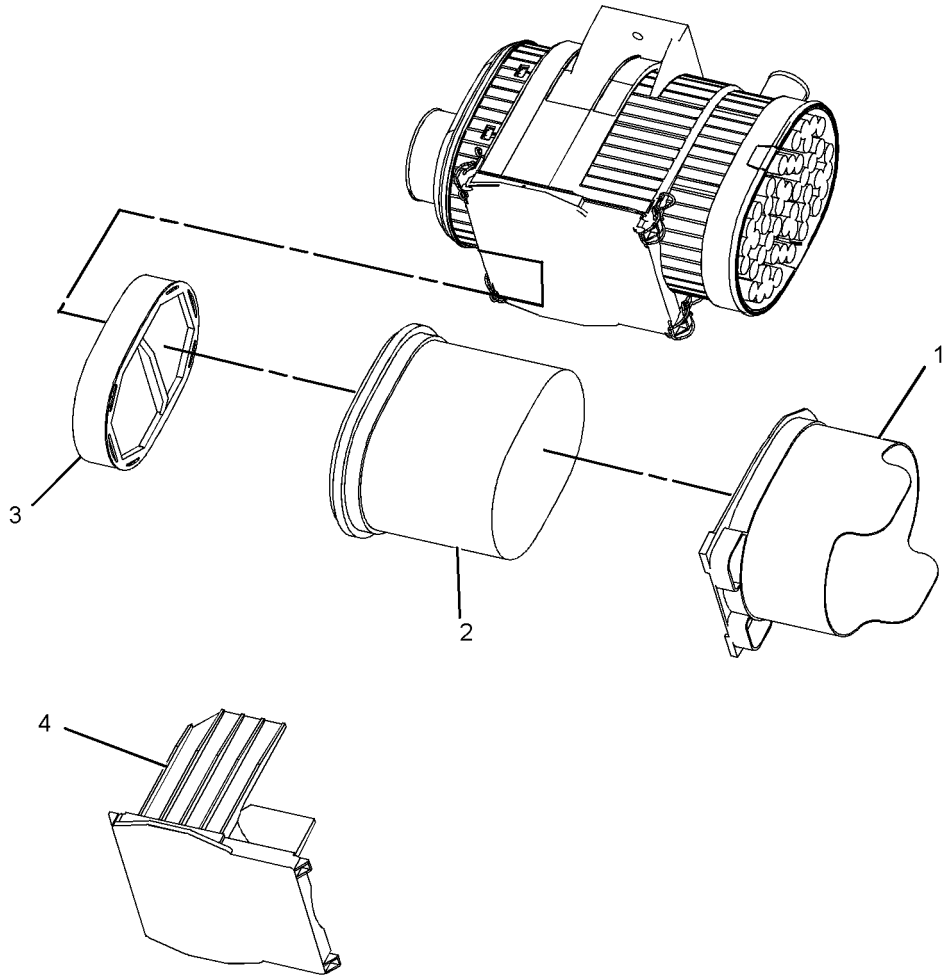


GRAPHIC #1 **<END>** g01035095

# AIR INLET AND EXHAUST SYSTEM

## *231-0149* COVER GP-AIR INLET

**S/N: CRS1-UP**

**PART OF 234-3059, 234-3061 ENGINE AR-PRIMARY**

**AN ATTACHMENT**

**SMCS-1087** **i01892308**

| NOTE | REF NO | GRAPHIC REF | PART NUMBER | QTY | PART NAME 1 2 3 4 5 6 (PRODUCT LEVEL) | SEE PAGE |
|---|---|---|---|---|---|---|
| | 1 | 1 | **6I-0572** | 12 | BOLT (M8X1.25.20MM) | |
| | 2 | 1 | **114-2579** | 3 | GASKET | |
| | 3 | 1 | **115-1162** | 3 | PLATE | |

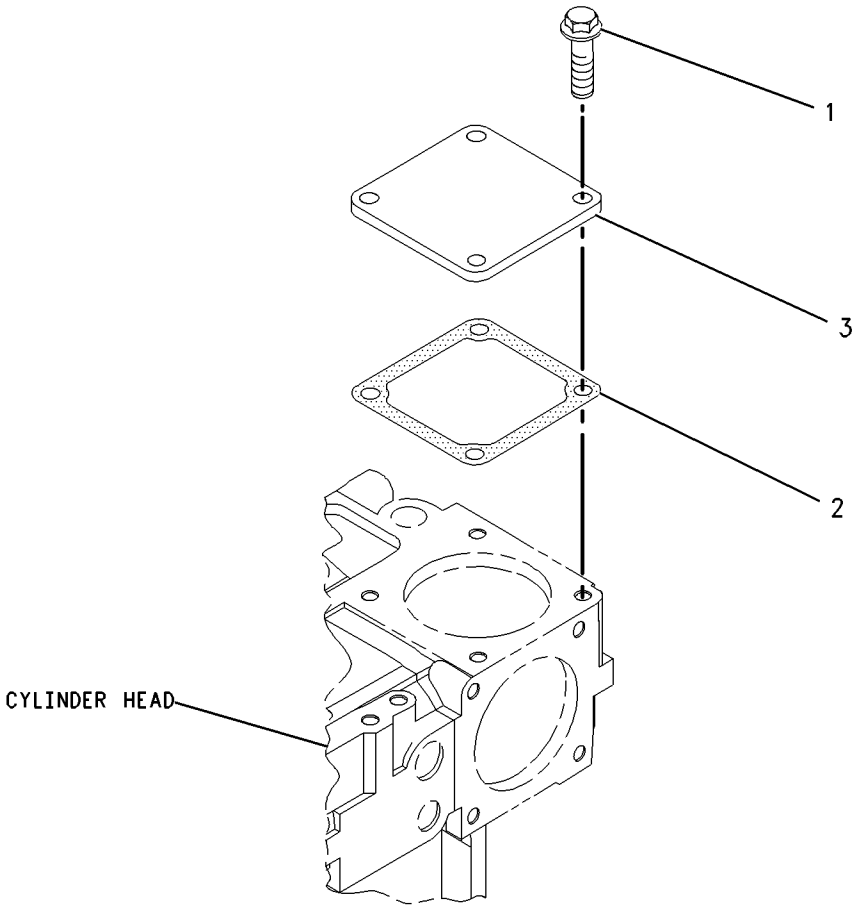


GRAPHIC #1 **<END>** g00986215

# AIR INLET AND EXHAUST SYSTEM

## *236-2486* EXTENSION GP-EXHAUST

**S/N: BXC1-UP; DSX1-UP**
**PART OF 214-6891, 214-6893 ENGINE AR**
**AN ATTACHMENT**

**SMCS-1061** **i01991962**

| NOTE | REF NO | GRAPHIC REF | PART NUMBER | QTY | PART NAME 1 2 3 4 5 6 (PRODUCT LEVEL) | SEE PAGE |
|---|---|---|---|---|---|---|
| | 1 | 1 | **7E-3870** | 1 | CLAMP | |
| | 2 | 1 | **236-5860** | 1 | PLATE AS | |
| | 3 | 1 | **239-2270** | 1 | PIPE-EXTENSION | |
| | 4 | 1 | **8T-4121** | 3 | WASHER-HARD (11X21X2.5MM THK) | |
| M | 5 | 1 | **8T-4136** | 3 | BOLT (M10X1.5X25MM) | |

M-METRIC PART

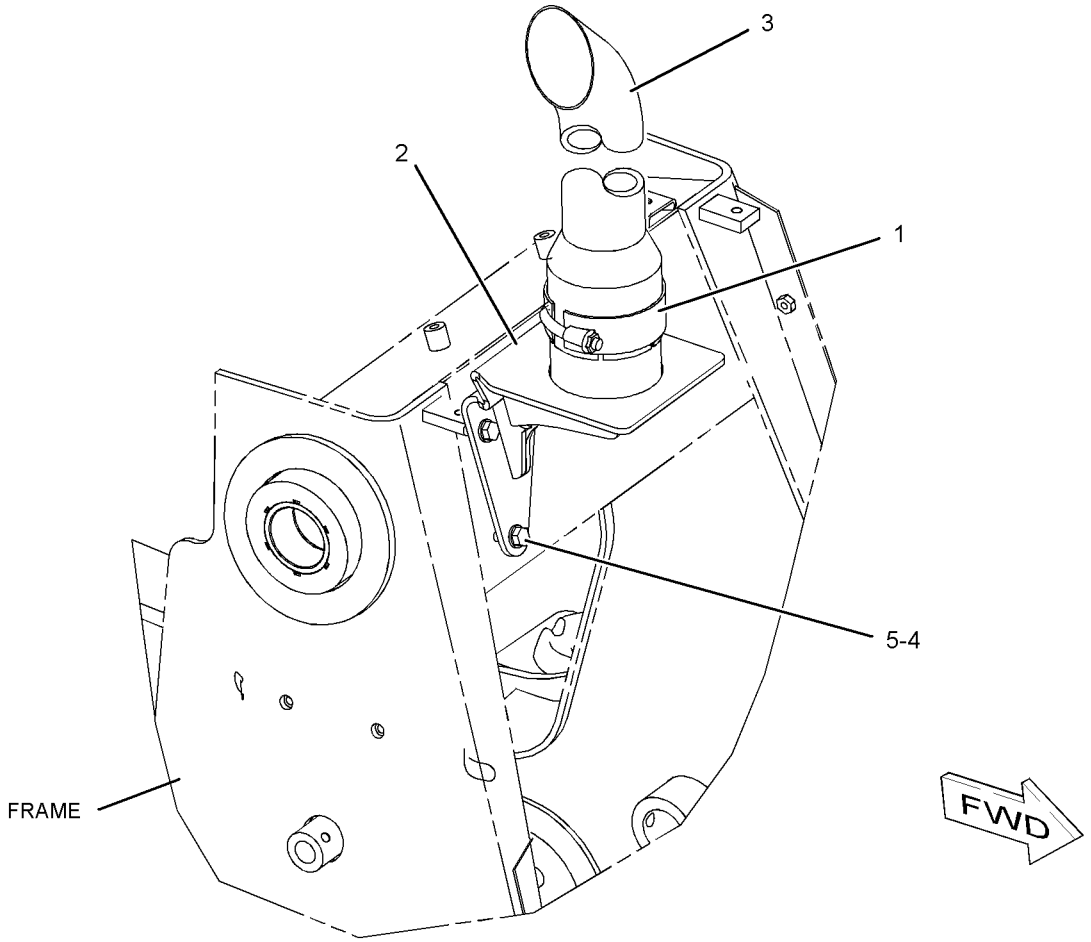


GRAPHIC #1 **<END>** g01040352

# AIR INLET AND EXHAUST SYSTEM

## *238-9828* INDICATOR GP-AIR FILTER CHANGE

**S/N: BXC1-UP; DSX1-UP**

**PART OF 214-7006, 214-7007 CAB AR, 214-7004 CANOPY AR, 214-6891 ENGINE AR**

**AN ATTACHMENT**

**SMCS-7452** **i02007397**

| NOTE | REF NO | GRAPHIC REF | PART NUMBER | QTY | PART NAME 1 2 3 4 5 6 (PRODUCT LEVEL) | SEE PAGE |
|---|---|---|---|---|---|---|
| D | 1 | 1 | **6V-1363** | | HOSE (.1M) | |
| | 2 | 1 | **225-9303** | 1 | FITTING | |
| | 3 | 1 | *240-2569* | 1 | INDICATOR GP-FILTER CHANGE | |
| | 3A | 1 | **5W-9411** | 1 | SEAL-O-RING | |
| | 3B | 1 | **8N-2694** | 1 | INDICATOR GP-AIR FILTER CHANGE | |
| | 3C | 1 | **119-6723** | 1 | FITTING | |
| | 3D | 1 | **123-0275** | 1 | FITTING (FILTER) | |
| | 4 | 1 | **4D-8123** | 1 | CLIP | |
| M | 5 | 1 | **8T-4138** | 2 | BOLT (M6X1X20MM) | |
| | 6 | 1 | **8T-4205** | 2 | WASHER-HARD (7.2X14.5X2MM THK) | |

D-ORDER BY THE METER
M-METRIC PART

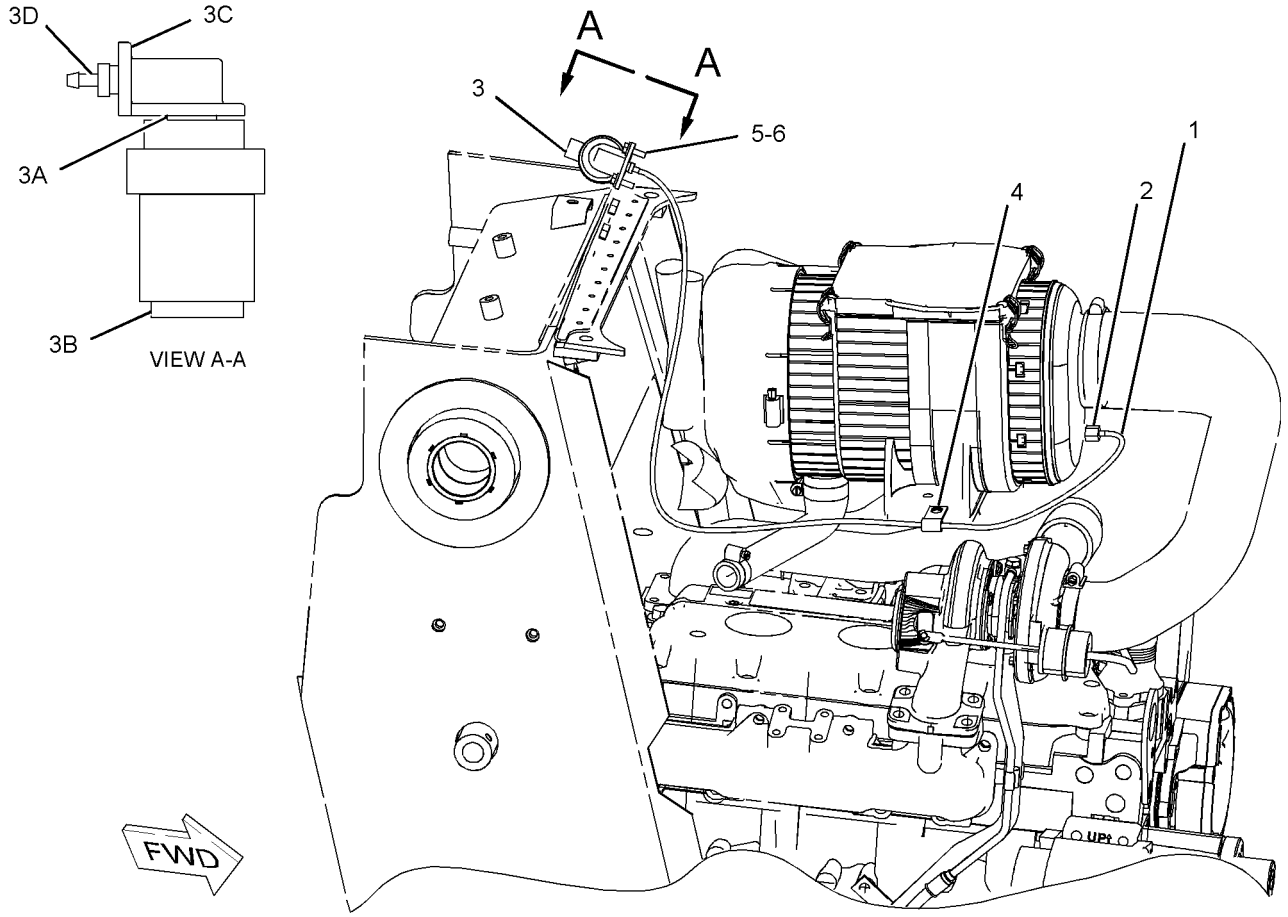


GRAPHIC #1 **<END>** g01022647

# AIR INLET AND EXHAUST SYSTEM

## *239-6996* INDICATOR GP-AIR FILTER CHANGE

**S/N: BXC1-UP; DSX1-UP**
**PART OF 214-7008, 214-7009 CAB AR-ENCLOSED ROPS**
**AN ATTACHMENT**

**SMCS-7452** **i01968468**

| NOTE | REF NO | GRAPHIC REF | PART NUMBER | QTY | PART NAME 1 2 3 4 5 6 (PRODUCT LEVEL) | SEE PAGE |
|---|---|---|---|---|---|---|
| D | 1 | 1 | **6V-1363** | | HOSE (.1M) | |
| | 2 | 1 | **225-9303** | 1 | FITTING | |
| | 3 | 1 | *240-2568* | 1 | INDICATOR GP-FILTER CHANGE | |
| | 3A | 1 | **5W-9411** | 1 | SEAL-O-RING | |
| | 3B | 1 | **119-6723** | 1 | FITTING | |
| | 3C | 1 | **123-0275** | 1 | FITTING (FILTER) | |
| | 3D | 1 | **136-5308** | 1 | SWITCH AS (AIR INLET) | |
| | 4 | 1 | **4D-8123** | 1 | CLIP | |
| M | 5 | 1 | **8T-4138** | 2 | BOLT (M6X1X20MM) | |
| | 6 | 1 | **8T-4205** | 2 | WASHER-HARD (7.2X14.5X2MM THK) | |

D-ORDER BY THE METER
M-METRIC PART

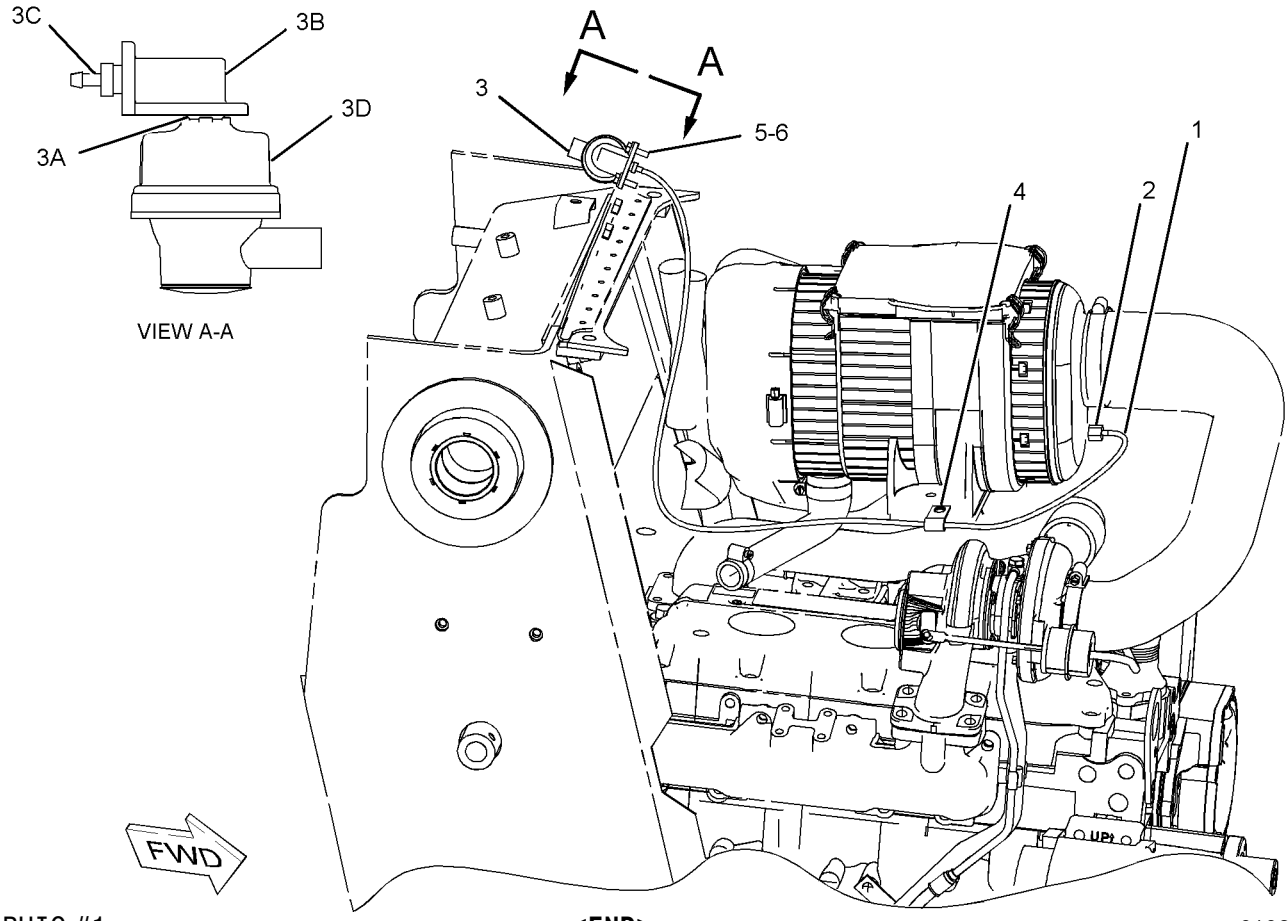


GRAPHIC #1 **<END>** g01022629

# AIR INLET AND EXHAUST SYSTEM

## *239-5761* LINES GP-AIR—CRANKCASE BREATHER

**S/N: BXC1-UP; DSX1-UP**

**AN ATTACHMENT**

**SMCS-1071** **i01971580**

| NOTE | REF NO | GRAPHIC REF | PART NUMBER | QTY | PART NAME 1 2 3 4 5 6 (PRODUCT LEVEL) | SEE PAGE |
|---|---|---|---|---|---|---|
| | 1 | 1 | **5P-4868** | 1 | CLAMP-HOSE | |
| | 2 | 1 | **8T-6726** | 1 | CLAMP-HOSE | |
| | 3 | 1 | **8T-9402** | 2 | CLAMP-HOSE | |
| | 4 | 1 | **239-5763** | 1 | HOSE AS (AIR) | |
| | 5 | 1 | **239-5766** | 1 | HOSE (FUMES) | |

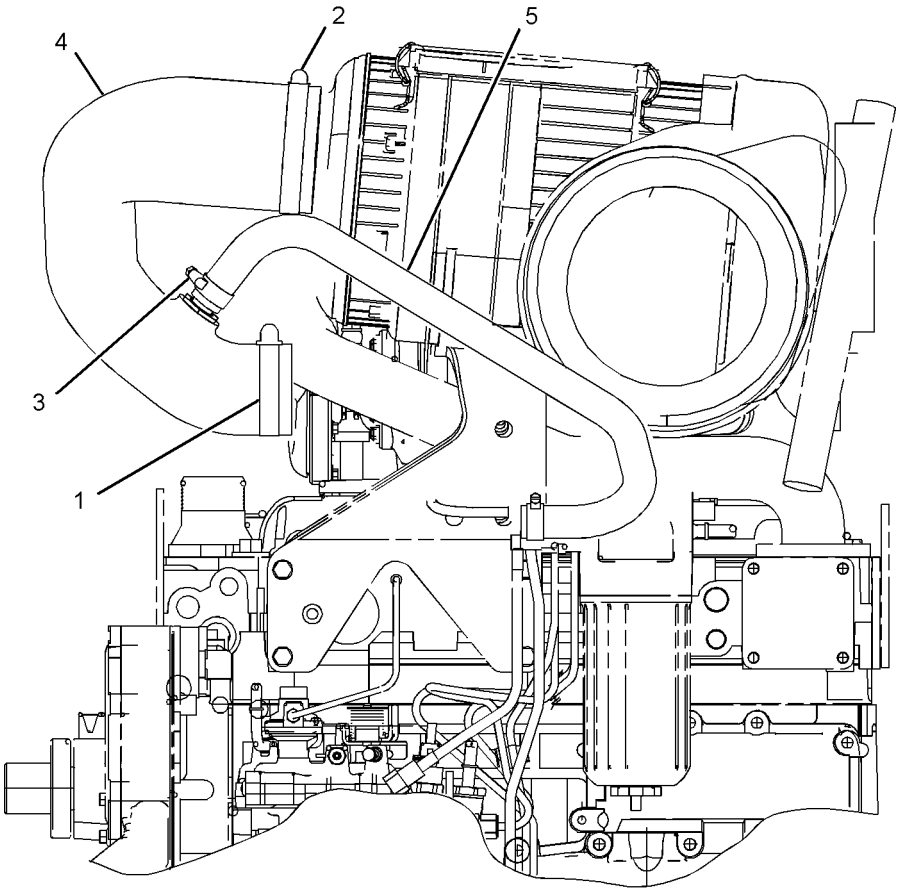


LEFT SIDE VIEW

GRAPHIC #1 **<END>** g01025778

# AIR INLET AND EXHAUST SYSTEM

## *242-1529* LINES GP-AIR

**S/N: BXC1-UP; DSX1-UP**

**AN ATTACHMENT**

**SMCS-1071** **i01971737**

| NOTE | REF NO | GRAPHIC REF | PART NUMBER | QTY | PART NAME 1 2 3 4 5 6 (PRODUCT LEVEL) | SEE PAGE |
|---|---|---|---|---|---|---|
| | 1 | 1 | **5P-4868** | 1 | CLAMP-HOSE | |
| | 2 | 1 | **8T-6726** | 1 | CLAMP-HOSE | |
| | 3 | 1 | **234-5121** | 1 | HOSE-AIR | |

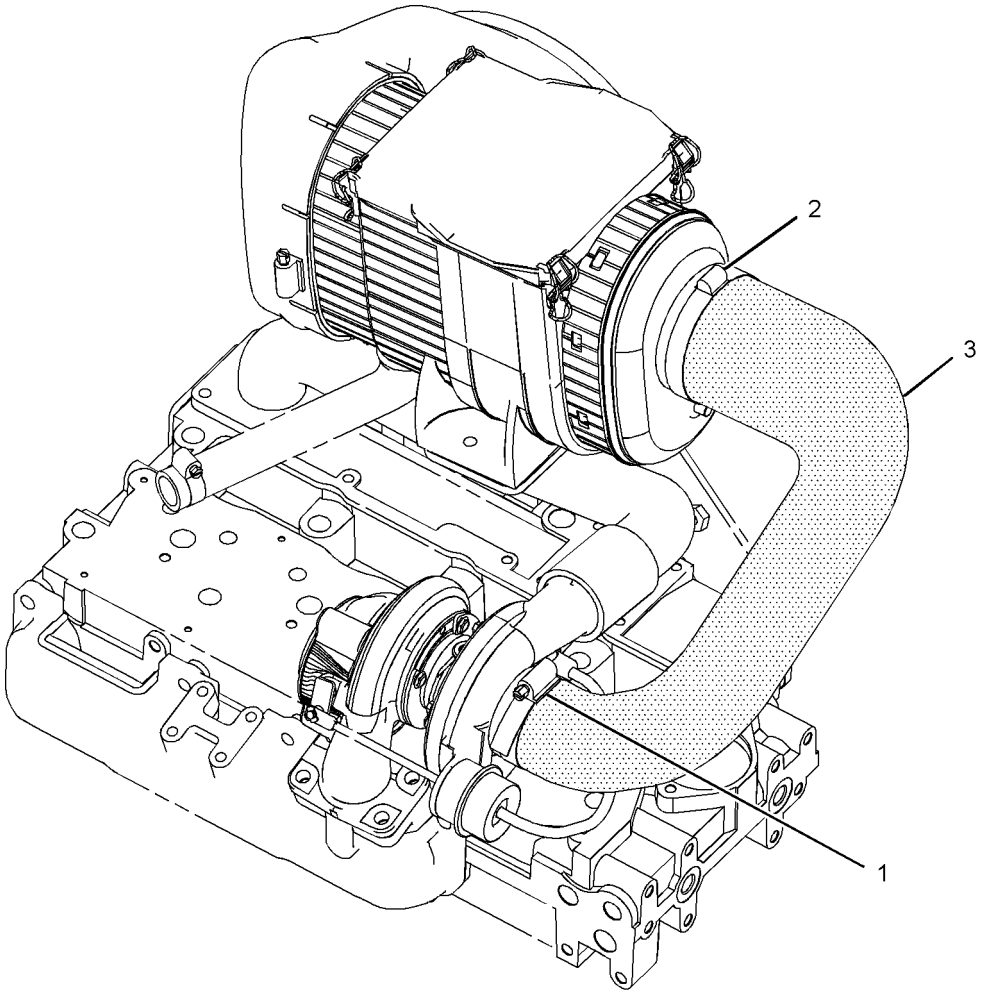


GRAPHIC #1 **<END>** g01025805

# AIR INLET AND EXHAUST SYSTEM

## *242-9947* LINES GP-AIR—CRANKCASE BREATHER

**S/N: BXC1-UP; DSX1-UP**

**AN ATTACHMENT**

**SMCS-1071** **i01967432**

| NOTE | REF NO | GRAPHIC REF | PART NUMBER | QTY | PART NAME 1 2 3 4 5 6 (PRODUCT LEVEL) | SEE PAGE |
|---|---|---|---|---|---|---|
| | 1 | 1 | *239-5761* | 1 | LINES GP-AIR (CRANKCASE BREATHER) | |
| | 1A | 1 | **5P-4868** | 1 | CLAMP-HOSE | |
| | 1B | 1 | **8T-6726** | 1 | CLAMP-HOSE | |
| | 1C | 1 | **8T-9402** | 2 | CLAMP-HOSE | |
| | 1D | 1 | **239-5763** | 1 | HOSE AS (AIR) | |
| | 1E | 1 | **239-5766** | 1 | HOSE (FUMES) | |

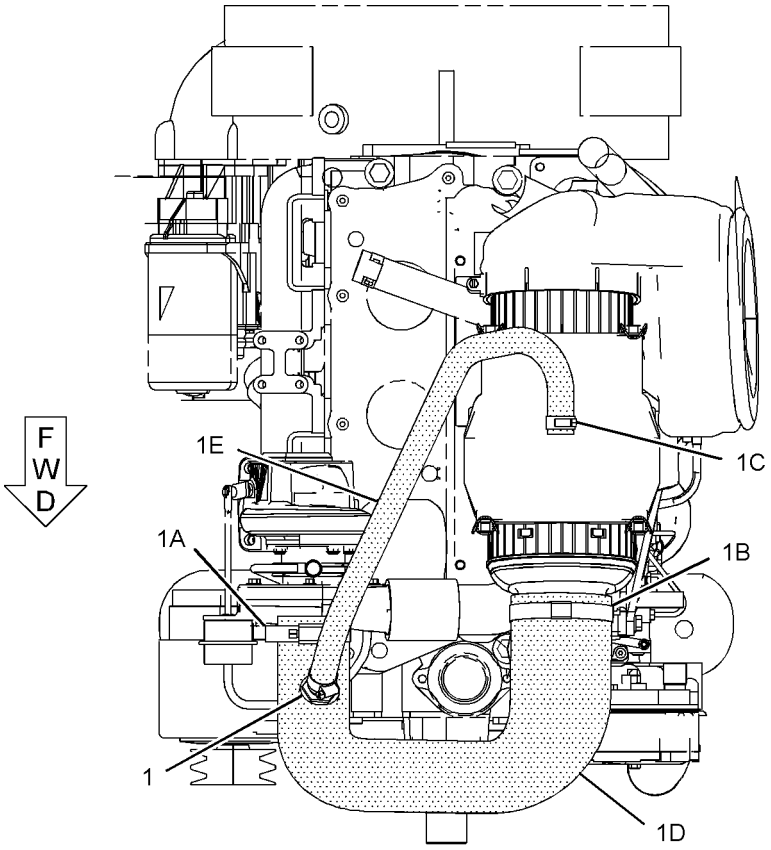


TOP VIEW

GRAPHIC #1 **<END>** g01024888

# AIR INLET AND EXHAUST SYSTEM

## *235-3420* MUFFLER GP

**S/N: BXC1-UP; DSX1-UP**
**PART OF 214-6891, 214-6893 ENGINE AR**
**AN ATTACHMENT**

**SMCS-1062** **i01998497**

| NOTE | REF NO | GRAPHIC REF | PART NUMBER | QTY | PART NAME 1 2 3 4 5 6 (PRODUCT LEVEL) | SEE PAGE |
|---|---|---|---|---|---|---|
| | 1 | 1 | **6I-0563** | 3 | NUT (M10) | |
| | 2 | 1 | **147-5553** | 3 | STUD | |
| | 3 | 1 | **235-5363** | 1 | MUFFLER AS (TURBO) | |
| | 4 | 1 | **236-2507** | 2 | CLAMP AS (MUFFLER) | |
| | 5 | 1 | **237-0975** | 1 | PLATE AS | |
| M | 5A | 1 | **8T-3490** | 4 | NUT-WELD (M10X1.5 THD) | |
| | 6 | 1 | **237-0976** | 1 | PLATE AS | |
| M | 6A | 1 | **8T-3490** | 1 | NUT-WELD (M10X1.5 THD) | |
| | 7 | 1 | **8T-4121** | 19 | WASHER-HARD (11X21X2.5MM THK) | |
| M | 8 | 1 | **8T-4133** | 4 | NUT (M10X1.5 THD) | |
| M | 9 | 1 | **8T-4136** | 4 | BOLT (M10X1.5X25MM) | |
| M | 10 | 1 | **8T-4195** | 8 | BOLT (M10X1.5X30MM) | |

M-METRIC PART

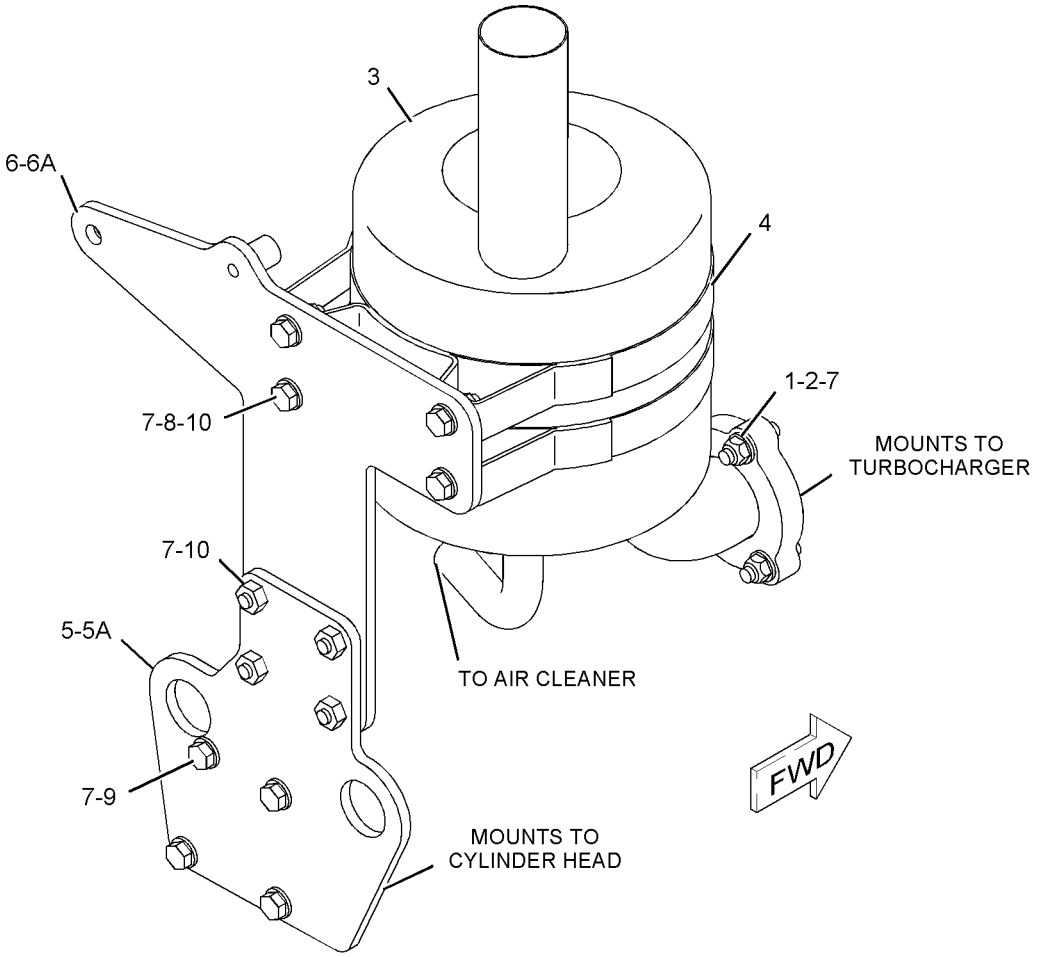


GRAPHIC #1 **<END>** g01036144

# AIR INLET AND EXHAUST SYSTEM

## *237-3924* TURBOCHARGER GP

**S/N: CRS1-UP**

**PART OF 234-3059, 234-3061 ENGINE AR-PRIMARY**

**AN ATTACHMENT**

**SMCS-1052, 1053** **i01999121**

| NOTE | REF NO | GRAPHIC REF | PART NUMBER | QTY | PART NAME 1 2 3 4 5 6 (PRODUCT LEVEL) | SEE PAGE |
|---|---|---|---|---|---|---|
| | 1 | 1 | **6I-0217** | 2 | BOLT (M8X1.25X20MM) | |
| | 2 | 1 | **6I-0563** | 4 | NUT (M10) | |
| | 3 | 1 | **6I-0572** | 4 | BOLT (M8X1.25.20MM) | |
| | 4 | 1 | **106-8916** | 2 | BOLT (M6X16MM) | |
| | 5 | 1 | **141-1667** | 2 | CLAMP-HOSE | |
| | 6 | 1 | **149-4236** | 4 | STUD | |
| | 7 | 1 | **174-9638** | 8 | BOLT | |
| | 8 | 1 | **194-5390** | 1 | GASKET-MANIFOLD | |
| | 9 | 1 | **225-8530** | 1 | GASKET | |
| | 10 | 1 | **225-8533** | 1 | GASKET | |
| | 11 | 1 | **225-8534** | 1 | GASKET | |
| | 12 | 1 | **225-8536** | 1 | GASKET | |
| | 13 | 1 | **234-3029** | 1 | HOSE | |
| | 14 | 1 | **234-3030** | 1 | GASKET | |
| | 15 | 1 | **237-2799** | 1 | TUBE AS | |
| | 15A | 1 | **225-8524** | 3 | BOLT | |
| | 15B | 1 | **225-8526** | 7 | WASHER | |
| | 16 | 1 | **237-3786** | 1 | TURBOCHARGER GP | |
| | 17 | 1 | **237-3791** | 1 | TUBE AS | |
| | 18 | 1 | **237-3794** | 1 | BOLT | |
| | 19 | 1 | **237-3921** | 1 | CLIP | |
| | 20 | 1 | **237-3922** | 1 | PIPE-EXHAUST | |
| | 21 | 1 | **237-3923** | 1 | MANIFOLD-EXHAUST | |

*237-3924* **TURBOCHARGER GP** ***(contd.)*** **i01999121**

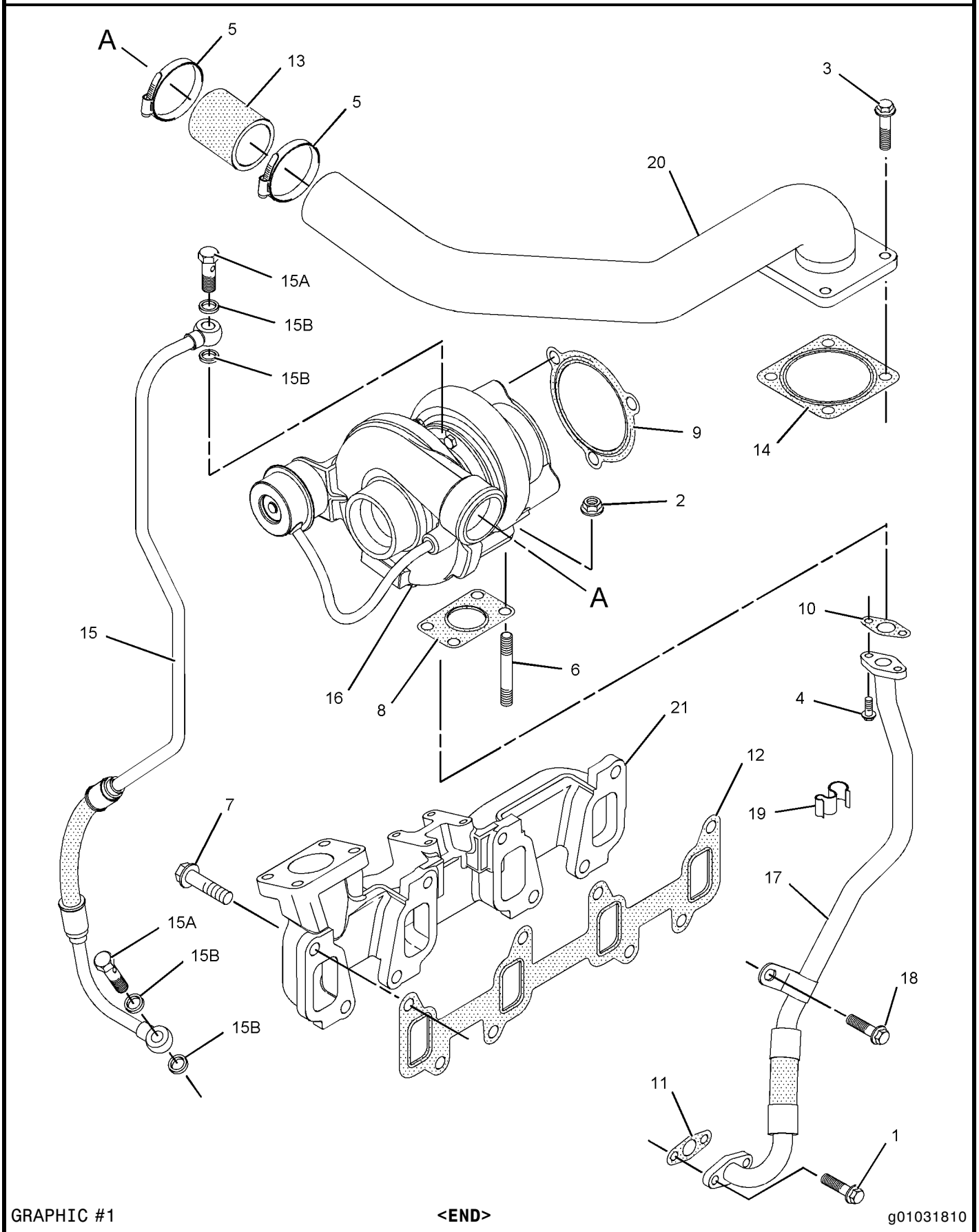


GRAPHIC #1 **<END>** g01031810

# FUEL SYSTEM

## *234-8892* CONTROL GP-GOV & ACCELERATOR

**S/N: BXC1-UP; DSX1-UP**

**PART OF 237-9288, 237-9289 CHASSIS AR**

**SMCS-1265, 1276** **i01983688**

| NOTE | REF NO | GRAPHIC REF | PART NUMBER | QTY | PART NAME 1 2 3 4 5 6 (PRODUCT LEVEL) | SEE PAGE |
|---|---|---|---|---|---|---|
| | 1 | 1 | **7K-1181** | 3 | STRAP-CABLE | |
| | 2 | 1 | **8X-5489** | 1 | SLEEVE | |
| | 3 | 1 | **164-1077** | 1 | PANEL AS | |
| M | | 1 | **6V-9632** | 4 | NUT-WELD (M6X1 THD) | |
| Y | 4 | 1 | **164-1078** | 1 | PEDAL GP-GOVERNOR | 761 |
| Y | 5 | 1 | **183-3887** | 1 | LEVER GP-GOVERNOR CONTROL | 746 |
| | 6 | 1 | **190-5139** | 1 | FILM (VARIABLE SPEED) | |
| | 7 | 1 | **202-6113** | 1 | BRACKET AS | |
| M | | 1 | **6V-9632** | 3 | NUT-WELD (M6X1 THD) | |
| | 8 | 1 | **235-0128** | 1 | CABLE AS | |
| M | | 1 | **5C-2890** | 1 | NUT (M6X1 THD) | |
| | | 1 | **8T-4742** | 2 | END-YOKE ROD | |
| | | 1 | **8T-4744** | 2 | PIN AS-SPRING | |
| | | 1 | **222-2690** | 1 | CLIP | |
| | 9 | 1 | **239-1434** | 1 | PLATE | |
| | 10 | 1 | **239-1435** | 1 | BRACKET AS | |
| M | | 1 | **8T-3612** | 2 | NUT-WELD (M8X1.25 THD) | |
| M | 11 | 1 | **119-5025** | 4 | SCREW-FLAT HEAD (M6X1X25MM) | |
| | 12 | 1 | **151-4841** | 3 | BLOCK | |
| | 13 | 1 | **164-1395** | 1 | KNOB | |
| | 14 | 1 | **3S-2093** | 1 | STRAP-CABLE | |
| M | 15 | 1 | **8T-4138** | 3 | BOLT (M6X1X20MM) | |
| | 16 | 1 | **8T-4205** | 3 | WASHER-HARD (7.2X14.5X2MM THK) | |
| | 17 | 1 | **8T-4224** | 4 | WASHER-HARD (8.8X16X2MM THK) | |
| M | 18 | 1 | **8T-4908** | 4 | BOLT (M8X1.25X25MM) | |
| M | 19 | 1 | **9X-2044** | 7 | SCREW-TRUSS HEAD (M6X1X16MM) | |

M-METRIC PART
Y-SEPARATE ILLUSTRATION

*234-8892* **CONTROL GP-GOV & ACCELERATOR** *(contd.)* **i01983688**

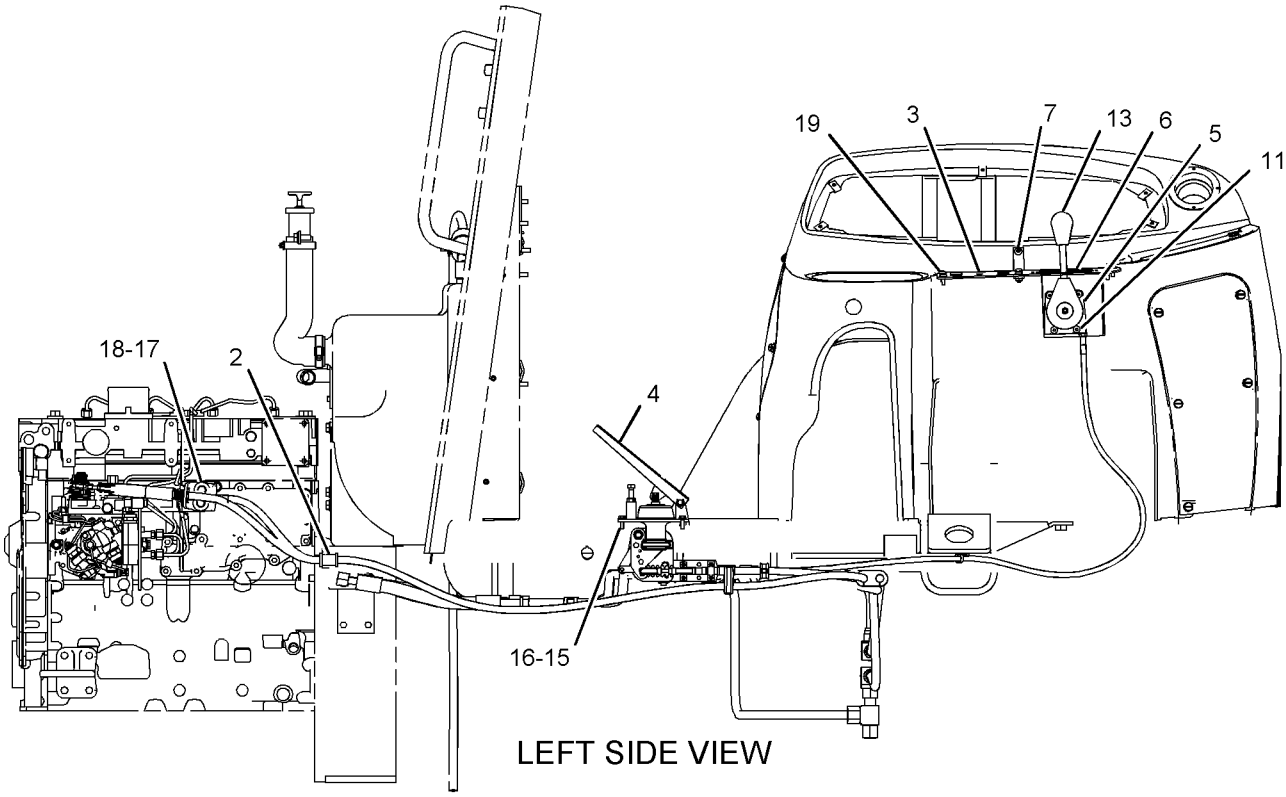


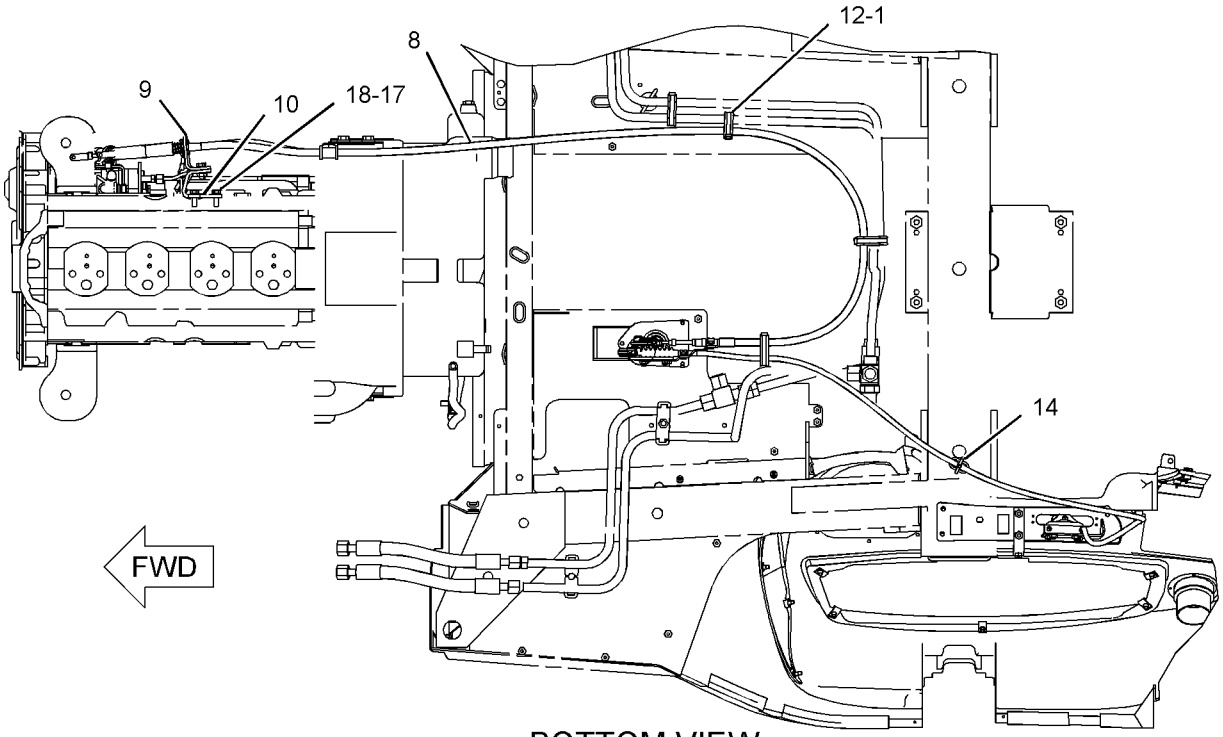


GRAPHIC #1 g01031631

**<END>**

# FUEL SYSTEM

## *233-9417* FILTER GP-FUEL

**S/N: CRS1-UP**
**PART OF 234-3061 ENGINE AR-PRIMARY**
**AN ATTACHMENT**

**SMCS-1261** **i01998681**

| NOTE | REF NO | GRAPHIC REF | PART NUMBER | QTY | PART NAME 1 2 3 4 5 6 (PRODUCT LEVEL) | SEE PAGE |
|---|---|---|---|---|---|---|
| | 1 | 1 | **237-0285** | 1 | BRACKET | |
| J | 2 | 1 | **120-6872** | 3 | BOLT | |
| | 3 | 1 | **160-7197** | 1 | CLIP | |
| | 4 | 1 | **237-0286** | 1 | PLUG | |
| | 5 | 1 | **215-9508** | 1 | CONNECTOR-SPECIAL | |
| | 6 | 1 | **215-9509** | 1 | CONNECTOR-SPECIAL | |
| | 7 | 1 | **232-3126** | 1 | CLIP | |
| | 8 | 1 | **238-8864** | 1 | PUMP GP-FUEL PRIMING | |
| | 8A | 1 | **1R-1804** | 1 | FILTER ELEMENT AS-FUEL | |
| J | 9 | 1 | **232-9758** | 3 | WASHER | |
| | 10 | 1 | **232-9759** | 1 | LINE AS-FUEL | |
| | 11 | 1 | **237-0284** | 1 | LINE AS-FUEL | |
| | 12 | 1 | **232-1115** | 1 | CLIP-PIPE | |
| | | | | | AVAILABLE REPAIR KIT(S): | |
| J | | | **240-9756** | 1 | MOUNTING GP-PRIMING PUMP | |

J-KIT MARKED J CONTAINS PARTS MARKED J

*233-9417* **FILTER GP-FUEL** *(contd.)* **i01998681**

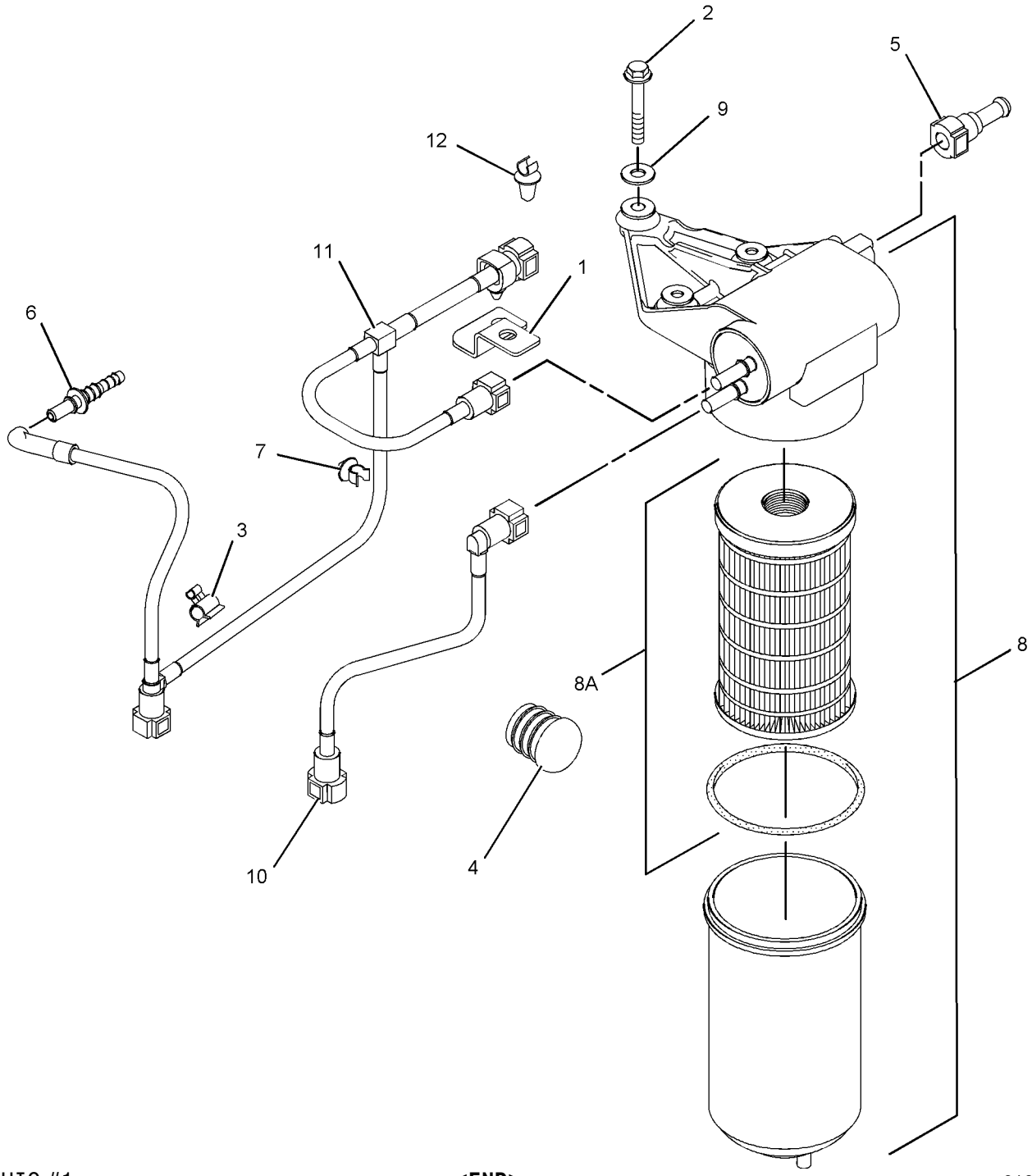


GRAPHIC #1 **<END>** g01011853

# FUEL SYSTEM

## *235-2972* LINES GP-FUEL

**S/N: BXC1-UP; DSX1-UP**
**PART OF 214-6891, 214-6893 ENGINE AR**
**AN ATTACHMENT**

**SMCS-1274** **i01998503**

| NOTE | REF NO | GRAPHIC REF | PART NUMBER | QTY | PART NAME 1 2 3 4 5 6 (PRODUCT LEVEL) | SEE PAGE |
|---|---|---|---|---|---|---|
| | 1 | 1 | **1P-4278** | 9 | CLAMP-HOSE | |
| | 2 | 1 | **8B-6127** | 1 | CLIP | |
| | 3 | 1 | **190-9838** | 1 | TUBE AS | |
| E | 3A | 1 | **5P-0078** | | TUBE (34CM) | |
| | 3B | 1 | **6V-8553** | 1 | NUT (11/16X16THD) | |
| | 3C | 1 | **6V-8560** | 1 | SLEEVE | |
| | 4 | 1 | **215-9513** | 1 | CONNECTOR | |
| | 5 | 1 | **238-1830** | 1 | TUBE AS | |
| | 5A | 1 | **6V-8553** | 1 | NUT (11/16X16THD) | |
| | 6 | 1 | **241-0022** | 1 | LINE AS-FUEL | |
| | 6A | 1 | **1P-4278** | 1 | CLAMP-HOSE | |
| E | 6B | 1 | **5P-1420** | | HOSE (59CM) | |
| | 7 | 1 | **241-4275** | 1 | TEE-SPECIAL | |
| | 8 | 1 | **0S-0550** | 1 | CLIP | |
| | 9 | 1 | **1P-7009** | 1 | CLIP | |
| | 10 | 1 | **6D-7573** | 1 | CLIP | |
| | 11 | 1 | **6K-8178** | 1 | CLIP | |
| M | 12 | 1 | **8T-1159** | 1 | BOLT-SOCKET HEAD (M10X1.5X25MM) | |
| | 13 | 1 | **8T-4121** | 3 | WASHER-HARD (11X21X2.5MM THK) | |
| M | 14 | 1 | **8T-4179** | 1 | BOLT (M12X1.75X20MM) | |
| | 15 | 1 | **8T-4223** | 1 | WASHER-HARD (13.5X25.5X3MM THK) | |
| E | 16 | 1 | **5P-1442** | | HOSE (81CM) | |
| E | 17 | 1 | **5P-1420** | | HOSE (122CM) | |

E-ORDER BY THE CENTIMETER
M-METRIC PART

*235-2972* **LINES GP-FUEL** *(contd.)* **i01998503**

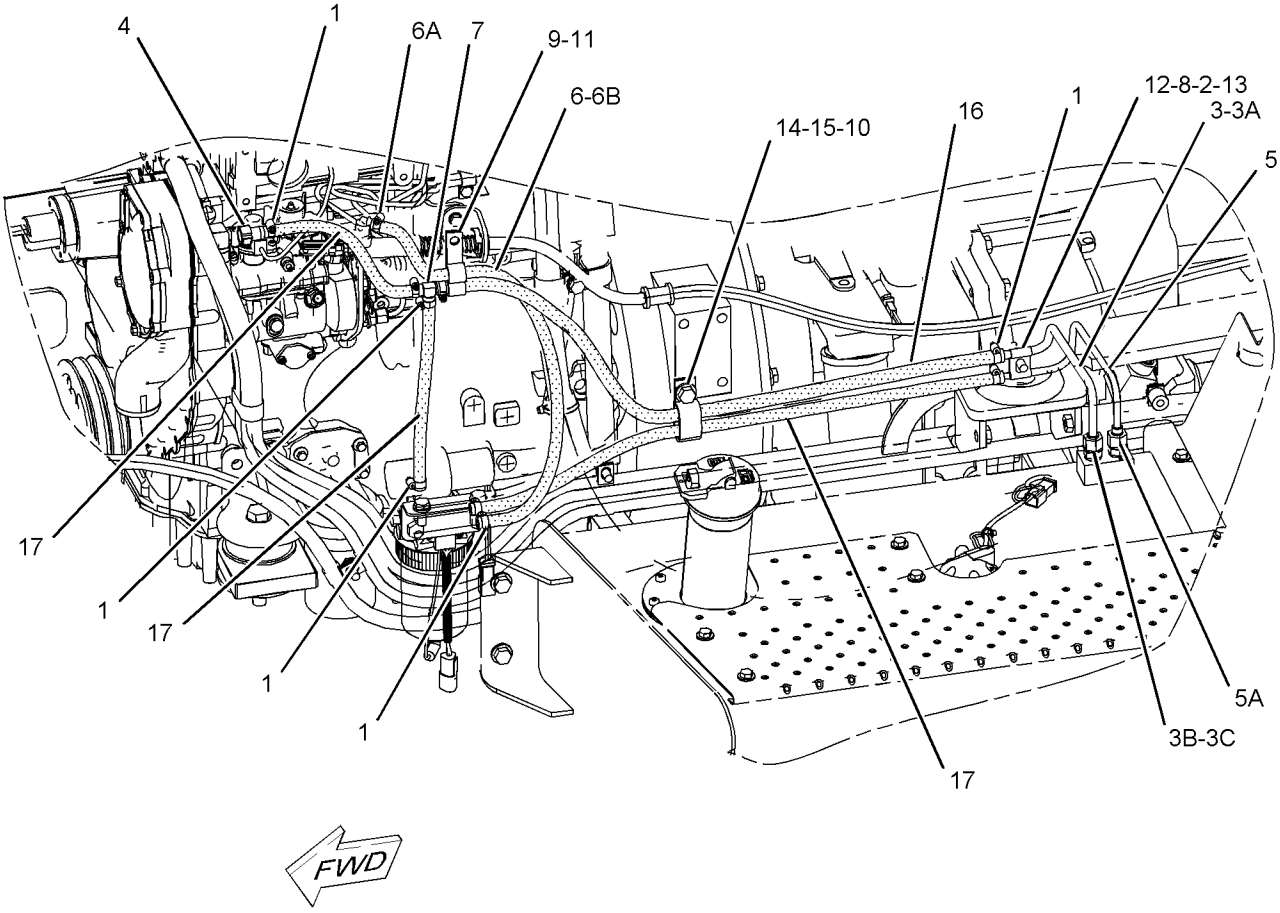


GRAPHIC #1 **<END>** g01035314

# FUEL SYSTEM

## *236-8228* PUMP GP-FUEL INJECTION

**S/N: CRS1-UP**

**PART OF 236-8229 PUMP GP-FUEL INJECTION**

**AN ATTACHMENT**

**SMCS-1251, 1290** **i01999156**

| NOTE | REF NO | GRAPHIC REF | PART NUMBER | QTY | PART NAME 1 2 3 4 5 6 (PRODUCT LEVEL) | SEE PAGE |
|---|---|---|---|---|---|---|
| | 1 | 1 | **152-3968** | 1 | SEAL-O-RING | |
| | 2 | 1 | **176-6219** | 1 | VALVE GP-SOLENOID (12 V) (AIR FUEL RATIO CONTROL) | |
| | 3 | 1 | **193-0161** | 1 | KIT-CONNECTOR | |

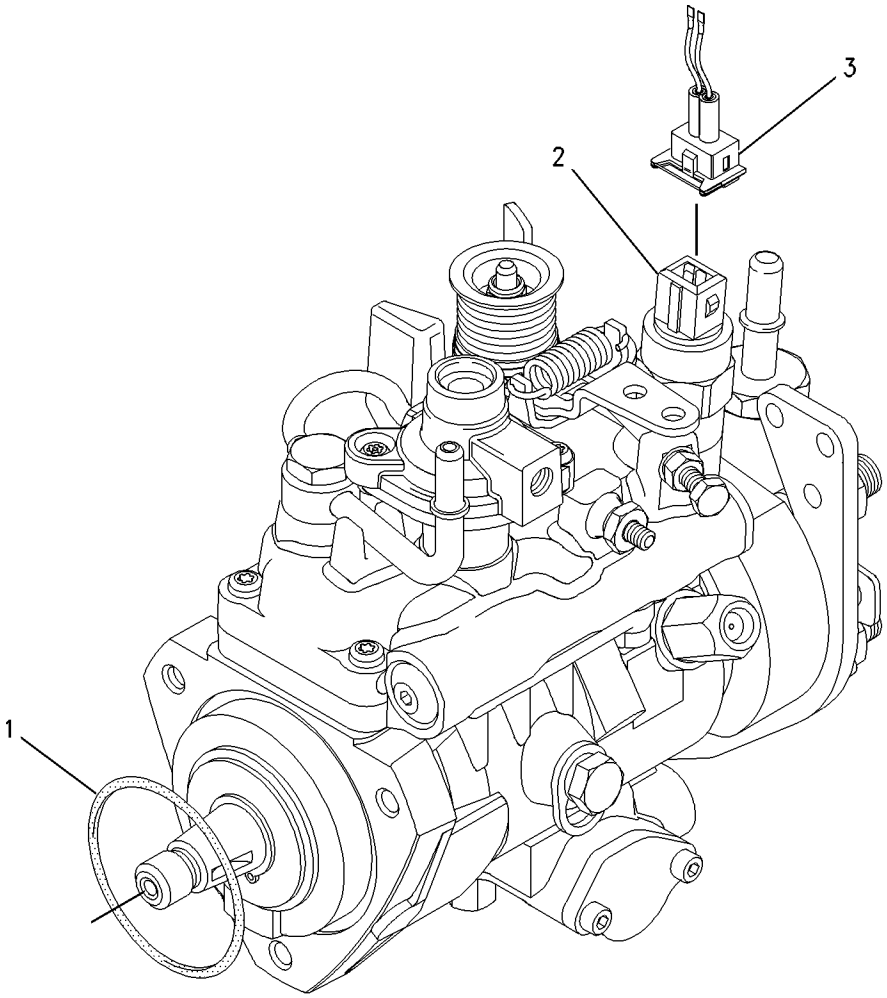


GRAPHIC #1 **<END>** g01006440

# FUEL SYSTEM

## *236-8229* PUMP GP-FUEL INJECTION

**S/N: CRS1-UP**

**PART OF 234-3061 ENGINE AR-PRIMARY**

**AN ATTACHMENT**

**SMCS-1251, 1290** **i01998686**

| NOTE | REF NO | GRAPHIC REF | PART NUMBER | QTY | PART NAME 1 2 3 4 5 6 (PRODUCT LEVEL) | SEE PAGE |
|---|---|---|---|---|---|---|
| | 1 | 1 | **6I-0217** | 1 | BOLT (M8X1.25X20MM) | |
| | 2 | 1 | **6I-0260** | 3 | BOLT (M8X1.25X25MM) | |
| | 3 | 1 | **6I-0291** | 1 | NUT (M8X1.25) | |
| | 4 | 1 | **035-8017** | 1 | UNION | |
| | 5 | 1 | **067-6264** | 1 | FITTING-FLARED | |
| | 6 | 1 | **067-6265** | 1 | FITTING-BRASS | |
| | 7 | 1 | **100-4830** | 1 | BOLT (M10X1.5X20MM) | |
| | 8 | 1 | **111-3422** | 1 | NUT | |
| | 9 | 1 | **111-3423** | 1 | WASHER | |
| | 10 | 1 | **140-8714** | 1 | CLIP | |
| | 11 | 1 | **230-7886** | 1 | TUBE AS | |
| | 11A | 1 | **067-6999** | 1 | OLIVE | |
| | 11B | 1 | **106-8835** | 1 | NUT | |
| | 12 | 1 | **230-8989** | 1 | GEAR-FUEL PUMP | |
| | 13 | 1 | **230-8995** | 1 | TUBE AS (CYL NO.1) | |
| | 14 | 1 | **230-8996** | 1 | TUBE AS (CYL NO.2) | |
| | 15 | 1 | **230-8997** | 1 | TUBE AS (CYL NO.3) | |
| | 16 | 1 | **230-8998** | 1 | TUBE AS (CYL NO.4) | |
| | 17 | 2 | **232-1323** | 1 | PLUG-CUP | |
| | 18 | 1 | **232-1328** | 1 | CAP | |
| | 19 | 1 | **232-1794** | 3 | HOSE | |
| | 20 | 1 | **232-2725** | 2 | CLIP | |
| | 21 | 1 | **232-2726** | 1 | CLIP | |
| | 22 | 1 | **232-3149** | 1 | WASHER | |
| | 23 | 1 | **232-3157** | 1 | BRACKET | |
| | 24 | 1 | **232-3158** | 4 | CLAMP-INJECTOR | |
| | 25 | 1 | **232-3274** | 4 | BOLT | |
| | 26 | 2 | **235-1790** | 1 | SWITCH (TIMING ADVANCE) | |
| | 27 | 1 | **236-1674** | 4 | INJECTOR AS-FUEL | |
| | | | | | (EACH INCLUDES) | |
| | | 1 | **236-1673** | 1 | NOZZLE | |
| | 27A | 1 | **140-8718** | 1 | WASHER | |
| Y | 28 | 1 | **236-8228** | 1 | PUMP GP-FUEL INJECTION | 92 |

Y-SEPARATE ILLUSTRATION

*236-8229* **PUMP GP-FUEL INJECTION** *(contd.)* **i01998686**

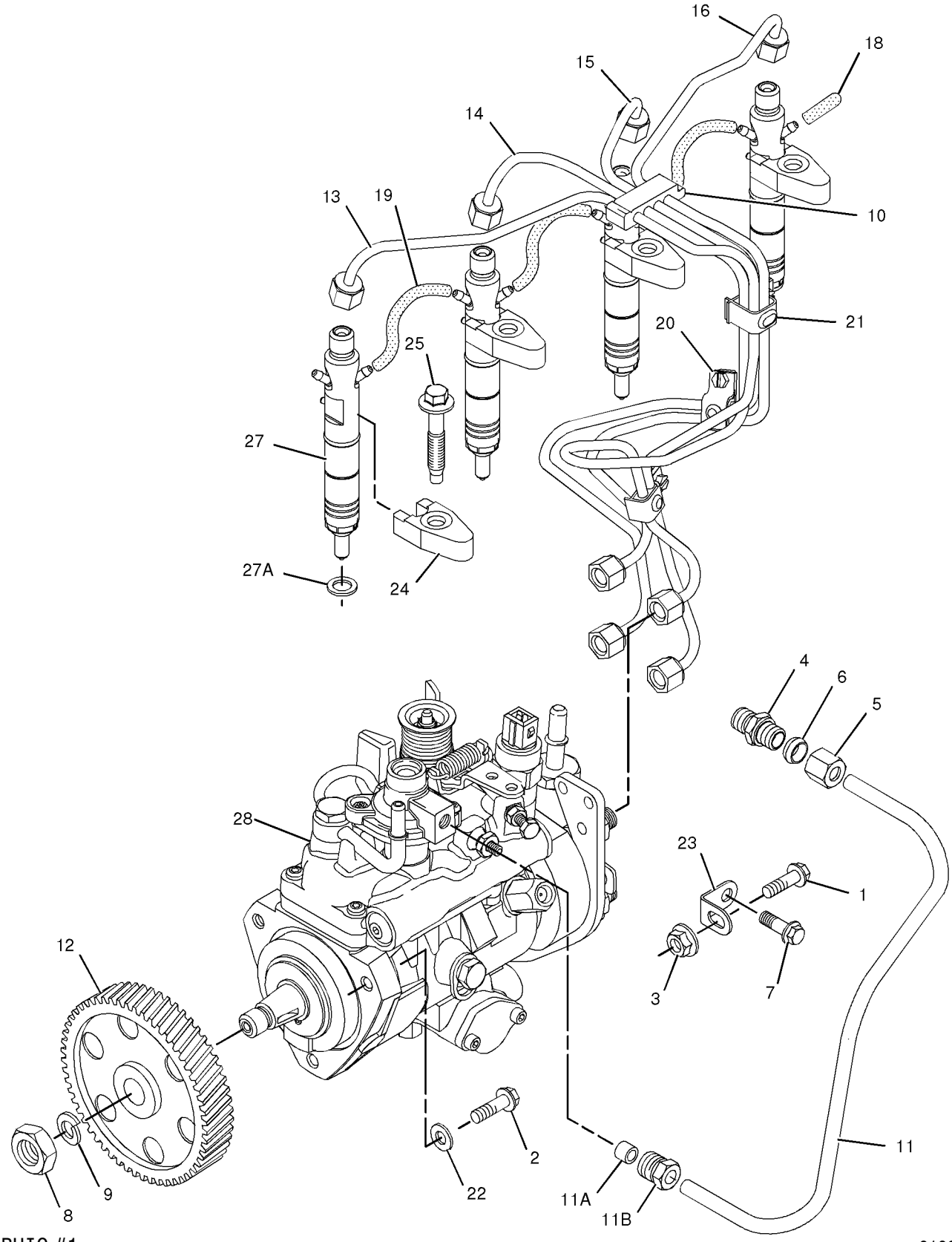


GRAPHIC #1 g01022784

*236-8229* **PUMP GP-FUEL INJECTION** *(contd.)* **i01998686**

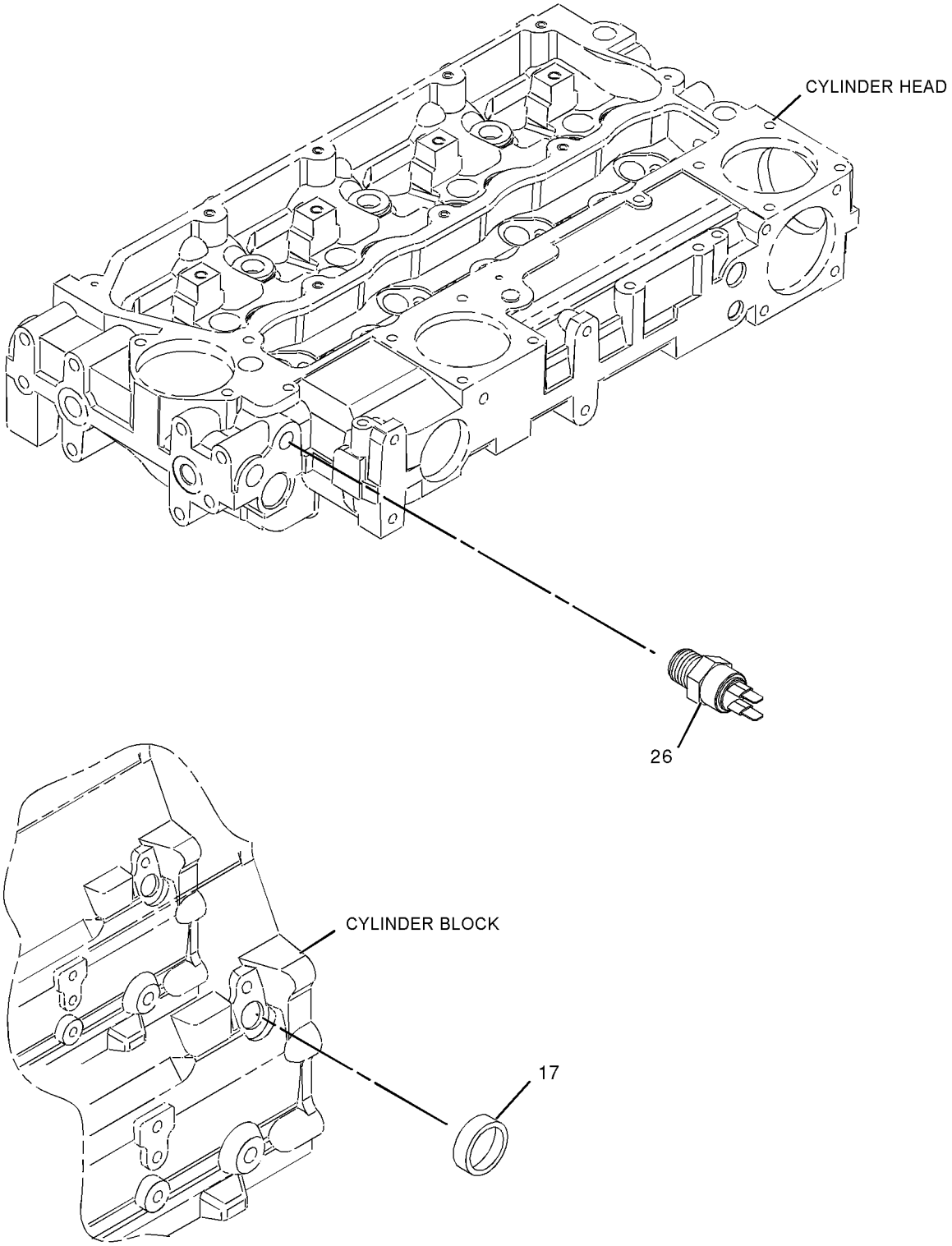


GRAPHIC #2 **<END>** g01022785

# FUEL SYSTEM

## *237-2528* PUMP GP-FUEL INJECTION

**S/N: CRS1-UP**
**PART OF 234-3059 ENGINE AR-PRIMARY**
**AN ATTACHMENT**

**SMCS-1251, 1290** **i02007394**

| NOTE | REF NO | GRAPHIC REF | PART NUMBER | QTY | PART NAME 1 2 3 4 5 6 (PRODUCT LEVEL) | SEE PAGE |
|---|---|---|---|---|---|---|
| | 1 | 1 | **6I-0217** | 1 | BOLT (M8X1.25X20MM) | |
| | 2 | 1 | **6I-0260** | 3 | BOLT (M8X1.25X25MM) | |
| | 3 | 1 | **6I-0291** | 1 | NUT (M8X1.25) | |
| | 4 | 1 | **9F-2247** | 1 | PLUG-PIPE | |
| | 5 | 1 | **100-4830** | 1 | BOLT (M10X1.5X20MM) | |
| | 6 | 1 | **111-3422** | 1 | NUT | |
| | 7 | 1 | **111-3423** | 1 | WASHER | |
| | 8 | 1 | **124-3815** | 1 | BOLT (M8X16X1.25MM) | |
| | 9 | 1 | **140-8714** | 1 | CLIP | |
| | 10 | 1 | **230-8989** | 1 | GEAR-FUEL PUMP | |
| | 11 | 1 | **230-8995** | 1 | TUBE AS (CYL NO.1) | |
| | 12 | 1 | **230-8996** | 1 | TUBE AS (CYL NO.2) | |
| | 13 | 1 | **230-8997** | 1 | TUBE AS (CYL NO.3) | |
| | 14 | 1 | **230-8998** | 1 | TUBE AS (CYL NO.4) | |
| | 15 | 1 | **240-5571** | 1 | BRACKET | |
| | 16 | 1 | **232-3126** | 1 | CLIP | |
| | 17 | 1 | **232-1323** | 1 | PLUG-CUP | |
| | 18 | 1 | **232-1328** | 1 | CAP | |
| | 19 | 1 | **232-1793** | 1 | CABLE | |
| | 20 | 1 | **232-1794** | 3 | HOSE | |
| | 21 | 1 | **232-2725** | 2 | CLIP | |
| | 22 | 1 | **232-2726** | 1 | CLIP | |
| | 23 | 1 | **232-3149** | 3 | WASHER | |
| | 24 | 1 | **232-3157** | 1 | BRACKET | |
| | 25 | 1 | **238-8671** | 1 | CLAMP-INJECTOR | |
| | 26 | 1 | **232-3274** | 4 | BOLT | |
| | 27 | 1 | **235-1790** | 1 | SWITCH (40-DEG) (ENGINE COOLANT TEMPERATURE) | |
| | 28 | 1 | **236-1674** | 4 | INJECTOR AS-FUEL | |
| | 28A | 1 | **140-8718** | 1 | WASHER | |
| | 28B | 1 | **236-1673** | 1 | NOZZLE | |
| | 29 | 1 | **237-2527** | 1 | PUMP GP-FUEL INJECTION | |

*237-2528* **PUMP GP-FUEL INJECTION** *(contd. )* **i02007394**

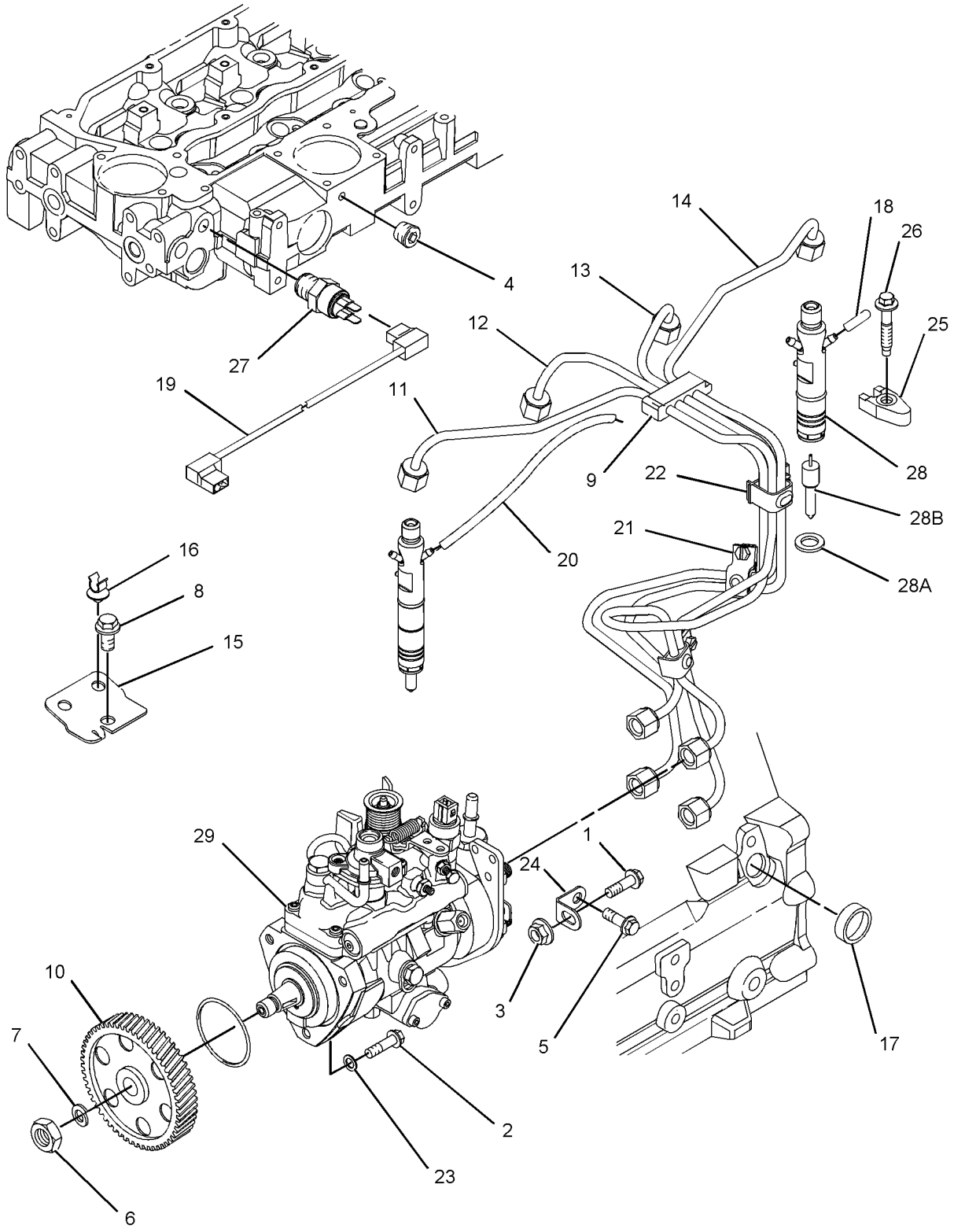


GRAPHIC #1 **<END>** g01021884

# FUEL SYSTEM

## *228-9129* PUMP GP-FUEL PRIMING

**S/N: BXC1-UP; DSX1-UP**
**PART OF 235-3170 SEPARATOR GP-WATER**
**AN ATTACHMENT**

**SMCS-1258** **i02010462**

| NOTE | REF NO | GRAPHIC REF | PART NUMBER | QTY | PART NAME 1 2 3 4 5 6 (PRODUCT LEVEL) | SEE PAGE |
|---|---|---|---|---|---|---|
| | 1 | 1 | **118-8118** | 1 | RING-RETAINING | |
| | 2 | 1 | **228-9130** | 1 | ELEMENT-FILTER (FUEL) | |
| | 3 | 1 | **228-9132** | 1 | FITTING (FUEL PUMP) | |
| | | | | | | |
| F | | | **149-9954** | 1 | DRAIN AS (SENSOR) | |
| | 4 | 1 | **193-0618** | 1 | SENSOR GP-MOISTURE (WATER SEPARATOR) | |
| | | 1 | **192-7877** | 1 | RETAINER | |

F-NOT SHOWN

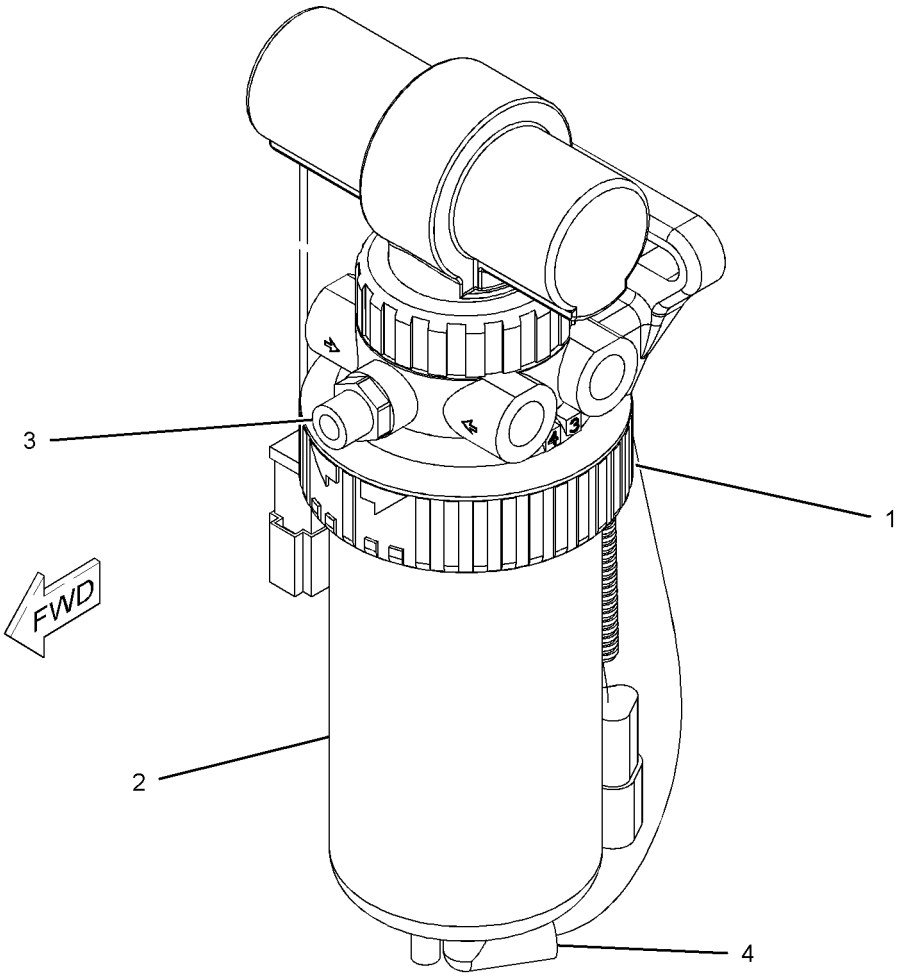


GRAPHIC #1 **<END>** g01039647

# FUEL SYSTEM

## *235-3170* SEPARATOR GP-WATER

**S/N: BXC1-UP; DSX1-UP**
**PART OF 214-6891, 214-6893 ENGINE AR**
**AN ATTACHMENT**

**SMCS-1263** **i01991957**

| NOTE | REF NO | GRAPHIC REF | PART NUMBER | QTY | PART NAME 1 2 3 4 5 6 (PRODUCT LEVEL) | SEE PAGE |
|---|---|---|---|---|---|---|
| | 1 | 1 | **3S-2093** | 1 | STRAP-CABLE | |
| | 2 | 1 | **069-4080** | 1 | FITTING-COUPLING | |
| | 3 | 1 | *165-7951* | 2 | CONNECTOR AS | |
| | | 1 | **3J-1907** | 1 | SEAL-O-RING | |
| | | 1 | **157-1669** | 1 | CONNECTOR | |
| Y | 4 | 1 | **228-9129** | 1 | PUMP GP-FUEL PRIMING | 98 |
| | 5 | 1 | **237-2197** | 1 | BRACKET AS | |
| | 6 | 1 | **3J-1907** | 2 | SEAL-O-RING | |
| | 7 | 1 | **8T-4121** | 4 | WASHER-HARD (11X21X2.5MM THK) | |
| M | 8 | 1 | **8T-4136** | 2 | BOLT (M10X1.5X25MM) | |
| M | 9 | 1 | **8T-4196** | 2 | BOLT (M10X1.5X35MM) | |
| | 10 | 1 | **9S-4191** | 2 | PLUG | |

M-METRIC PART
Y-SEPARATE ILLUSTRATION

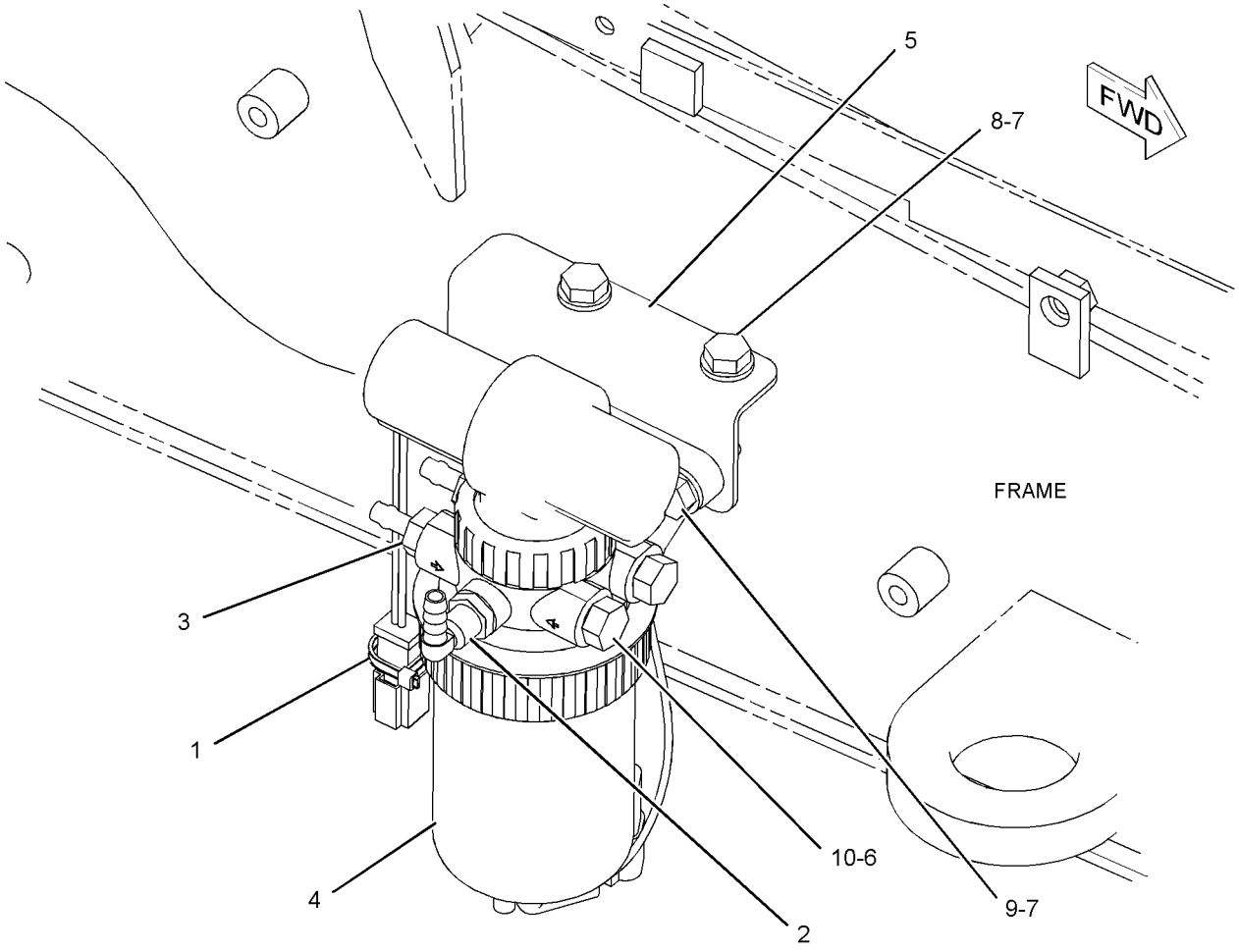


GRAPHIC #1 **<END>** g01040336

# FUEL SYSTEM

## *214-6908* TANK & MTG GP-FUEL

**S/N: BXC1-UP; DSX1-UP**

**PART OF 237-9288, 237-9289 CHASSIS AR**

**SMCS-1273** **i01964439**

| NOTE | REF NO | GRAPHIC REF | PART NUMBER | QTY | PART NAME 1 2 3 4 5 6 (PRODUCT LEVEL) | SEE PAGE |
|---|---|---|---|---|---|---|
| | 1 | 1 | **164-3876** | 1 | STEP AS | |
| M | | 1 | **8T-3612** | 4 | NUT-WELD | |
| | 2 | 1 | **190-5123** | 1 | PLATE AS | |
| M | | 1 | **8T-3612** | 3 | NUT-WELD | |
| | 3 | 1 | **201-1837** | 1 | TREAD | |
| Y | 4 | 1 | **214-6949** | 1 | TANK GP-FUEL | 101 |
| | 5 | 1 | **5P-4116** | 7 | WASHER-HARD (8.8X20.5X2MM THK) | |
| M | 6 | 1 | **8T-4183** | 4 | BOLT (M12X1.75X40MM) | |
| M | 7 | 1 | **8T-4189** | 7 | BOLT (M8X1.25X20MM) | |
| M | 8 | 1 | **8T-4200** | 4 | BOLT (M8X1.25X16MM) | |
| | 9 | 1 | **8T-4223** | 4 | WASHER-HARD (13.5X25.5X3MM THK) | |
| | 10 | 1 | **8T-4224** | 4 | WASHER-HARD (8.8X16X2MM THK) | |

M-METRIC PART
Y-SEPARATE ILLUSTRATION

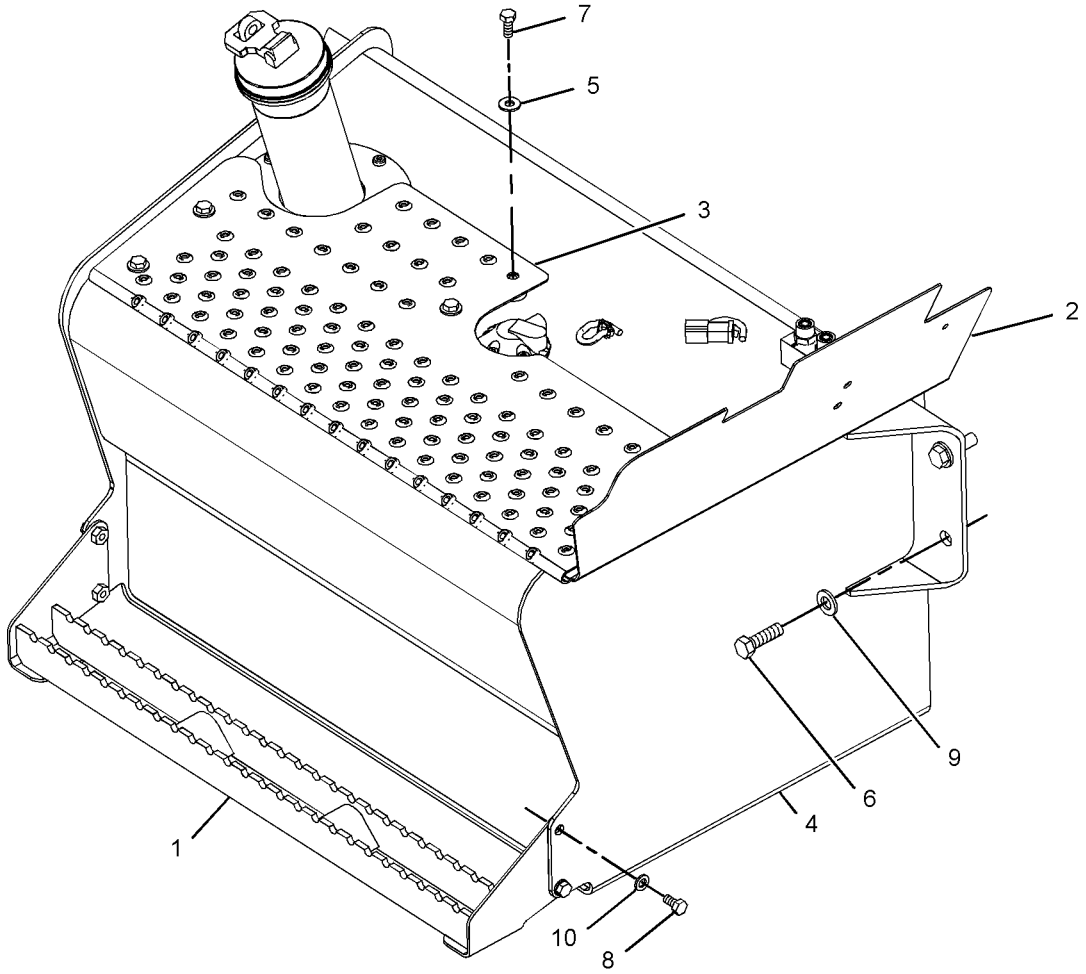


GRAPHIC #1 **<END>** g01021020

# FUEL SYSTEM

## 214-6949 TANK GP-FUEL

**S/N: BXC1-UP; DSX1-UP**

**PART OF 214-6908 TANK & MTG GP-FUEL**

**SMCS-1273** **i01998577**

| NOTE | REF NO | GRAPHIC REF | PART NUMBER | QTY | PART NAME 1 2 3 4 5 6 (PRODUCT LEVEL) | SEE PAGE |
|---|---|---|---|---|---|---|
| | 1 | 1 | **8L-8413** | 1 | STRAP-CABLE | |
| | 2 | 1 | **9R-7240** | 1 | GASKET | |
| | 3 | 1 | **131-0232** | 1 | COVER | |
| | 4 | 1 | **187-8936** | 1 | SENDER AS-FUEL LEVEL | |
| | | 1 | **3E-3365** | 1 | WEDGE-RECEPTACLE LOCK (2-PIN) | |
| | | 1 | **102-8802** | 1 | KIT-RECEPTACLE (2-PIN) | |
| | | 1 | **186-3735** | 2 | PIN-CONNECTOR | |
| Y | 5 | 1 | *244-2603* | 1 | TANK GP-FUEL | 102 |

Y-SEPARATE ILLUSTRATION

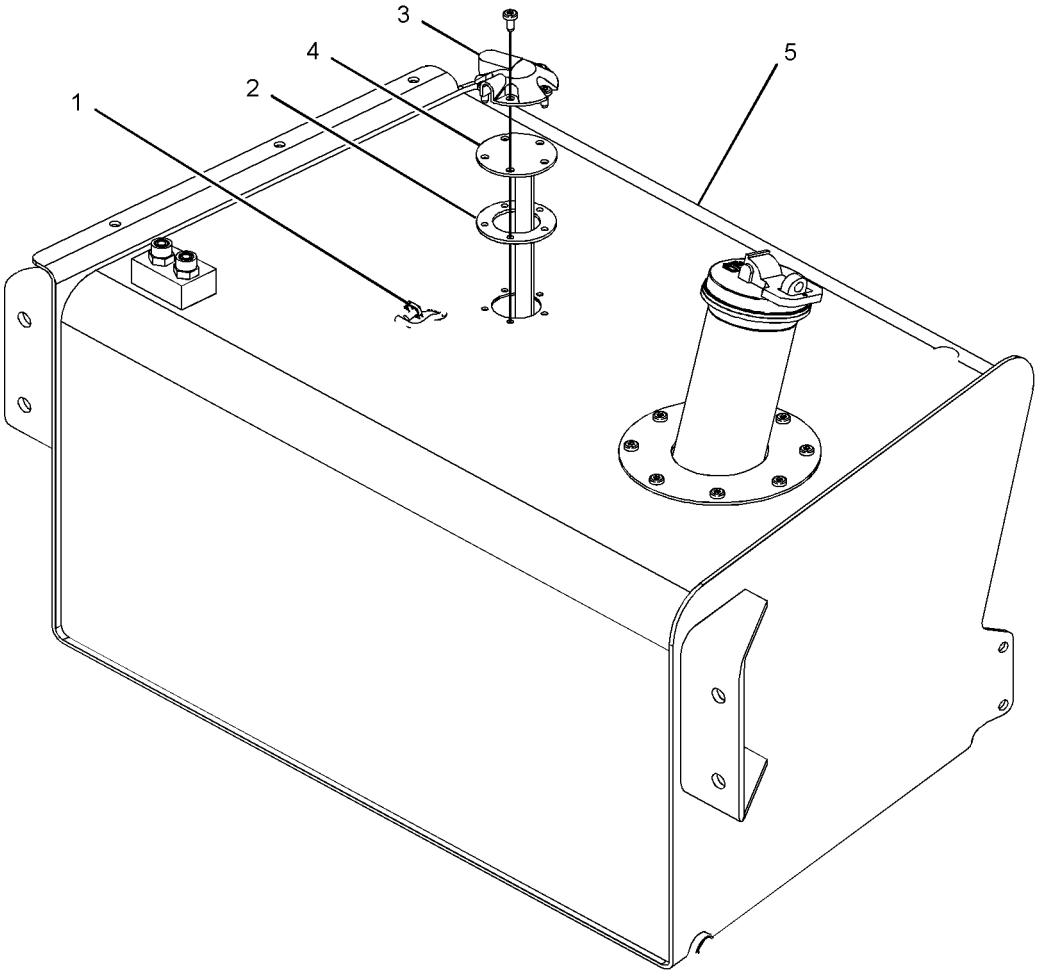


GRAPHIC #1 **<END>** g01033979

# FUEL SYSTEM

## *244-2603* TANK GP-FUEL

**S/N: BXC1-UP; DSX1-UP**

**PART OF 214-6949 TANK GP-FUEL**

**SMCS-1273** **i01987738**

| NOTE | REF NO | GRAPHIC REF | PART NUMBER | QTY | PART NAME 1 2 3 4 5 6 (PRODUCT LEVEL) | SEE PAGE |
|---|---|---|---|---|---|---|
| | 1 | 1 | **201-0330** | 1 | CAP-FUEL | |
| | 2 | 1 | **201-1835** | 1 | TUBE AS | |
| | 3 | 1 | **214-6948** | 1 | TANK AS-FUEL | |
| | 4 | 1 | **106-8020** | 1 | GASKET | |
| M | 5 | 1 | **123-4950** | 8 | SCREW-PAN HEAD (M6X1X16MM) | |
| | 6 | 1 | *148-8326* | 2 | CONNECTOR GP | |
| | | | | | (EACH INCLUDES) | |
| | | 1 | **3J-7354** | 1 | SEAL-O-RING | |
| | | 1 | **6V-8397** | 1 | SEAL-O-RING | |
| | | 1 | **6V-9872** | 1 | CONNECTOR | |
| | 7 | 1 | *148-8407* | 1 | PLUG GP | |
| | | 1 | **3J-1907** | 1 | SEAL-O-RING | |
| | | 1 | **9S-4191** | 1 | PLUG | |
| | | | | | | |
| F | | | **180-3730** | 1 | FILTER AS-FUEL (FILLER NECK SCREEN) | |

F-NOT SHOWN
M-METRIC PART

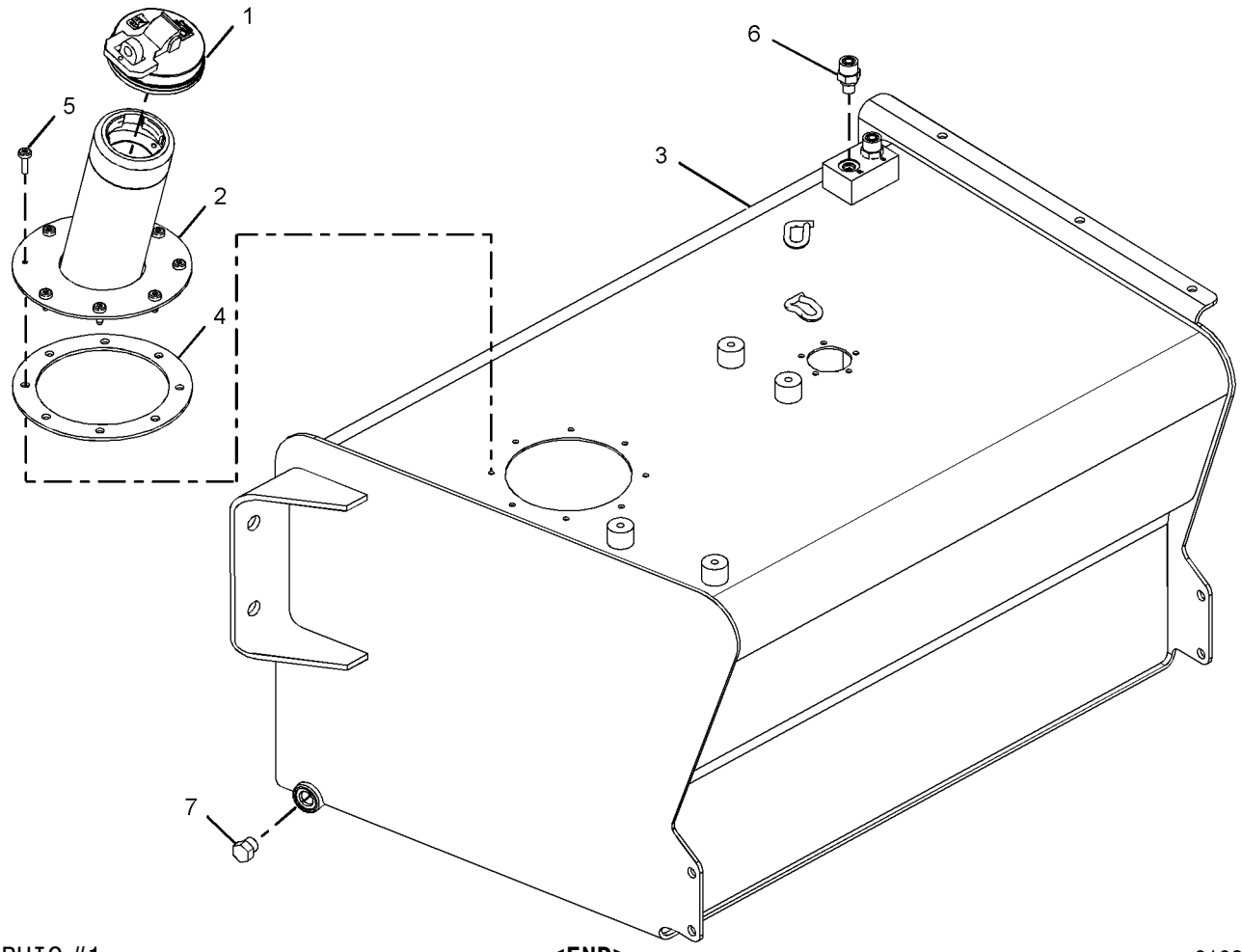


GRAPHIC #1 **<END>** g01030318

# ELECTRICAL AND STARTING SYSTEM

## *237-0027* ALTERNATOR GP-CHARGING

**S/N: CRS1-UP**

**PART OF 234-3059, 234-3061 ENGINE AR-PRIMARY**

**AN ATTACHMENT**

**SMCS-1405** **i01991983**

| NOTE | REF NO | GRAPHIC REF | PART NUMBER | QTY | PART NAME 1 2 3 4 5 6 (PRODUCT LEVEL) | SEE PAGE |
|---|---|---|---|---|---|---|
| | 1 | 1 | **6B-0933** | 1 | SPACER (10.31X19.05X6.35MM THK) | |
| | 2 | 1 | **6I-0260** | 1 | BOLT (M8X1.25X25MM) | |
| | 3 | 1 | **6I-0454** | 1 | BOLT (M10X1.5X70MM) | |
| | 4 | 1 | **6I-0594** | 1 | NUT (M10X1.5) | |
| | 5 | 1 | **7W-2632** | 1 | WASHER (8.5X16.8X1.6MM THK) | |
| | 6 | 1 | **067-6366** | 1 | WASHER (M8) | |
| | 7 | 1 | **100-8451** | 1 | BOLT | |
| | 8 | 1 | **113-6349** | 1 | NUT | |
| | 9 | 1 | **140-8783** | 2 | BOLT (M10X45MM) | |
| | 10 | 1 | **225-3145** | 1 | ALTERNATOR GP-CHARGING | |
| | 11 | 1 | **233-9530** | 1 | BRACKET | |
| | 12 | 1 | **233-9531** | 1 | LEVER-ADJUSTING | |
| | 13 | 1 | **233-9532** | 1 | PULLEY-ALTERNATOR | |

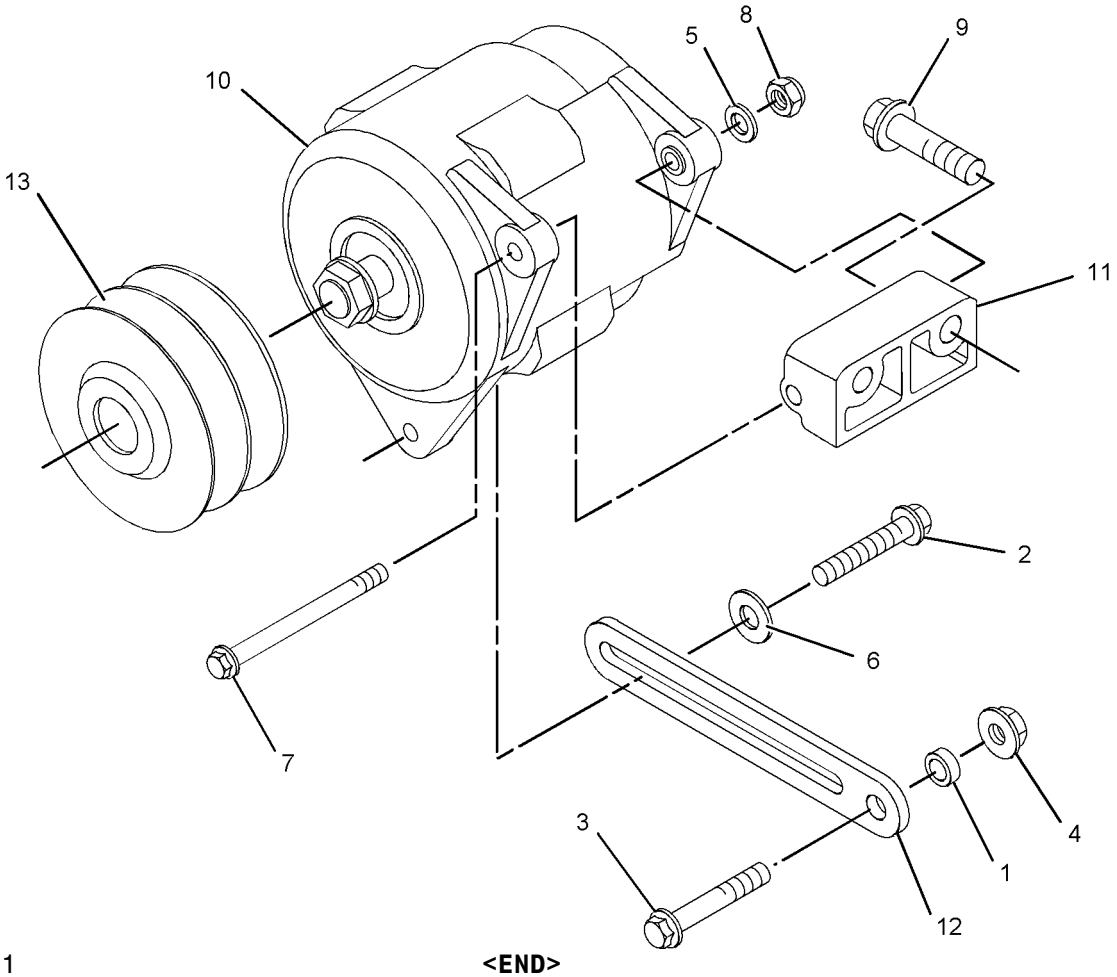


GRAPHIC #1 **<END>** g01039667

# ELECTRICAL AND STARTING SYSTEM

## *119-8016* BATTERY GP—HEAVY DUTY

**S/N: BXC1-UP; DSX1-UP**
**PART OF 228-4589, 228-4591 BOX GP-BATTERY**
**AN ATTACHMENT**

**SMCS-1401** **i02005191**

| NOTE | REF NO | GRAPHIC REF | PART NUMBER | QTY | PART NAME 1 2 3 4 5 6 (PRODUCT LEVEL) | SEE PAGE |
|---|---|---|---|---|---|---|
| | 1 | 1 | **141-1658** | 1 | CABLE AS-BATTERY (POSITIVE) | |
| E | | 1 | **5P-0761** | | CABLE (00GA)(RED) (94CM) | |
| D | | 1 | **6V-2722** | | TUBE-HEAT SHRINK (0.07M) | |
| | | 1 | **1S-7252** | 1 | TERMINAL-RING (FOR 3/8IN BOLT) | |
| E | | 1 | **8Y-8081** | | TUBE (48CM) | |
| | | 1 | **7T-9987** | 1 | COVER-TERMINAL | |
| | | 1 | **8N-0869** | 1 | COVER-TERMINAL (RED) (RING) | |
| | | 1 | **3T-3349** | 1 | STUDBOLT (M18X57.5MM) | |
| | | 1 | **1M-6120** | 2 | NUT (5/16-18 THD) | |
| | 1A | 1 | **3S-6049** | 1 | TERMINAL AS-BATTERY (POSITIVE) | |
| | | 1 | **1M-6119** | 1 | BOLT (5/16-18X1.375 IN) | |
| | | 1 | **1M-6120** | 1 | NUT (5/16-18 THD) | |
| C | 2 | 1 | **178-9242** | 2 | BRACKET AS | |
| | 3 | 1 | **130-8293** | 1 | CABLE AS-BATTERY (NEGATIVE) | |
| E | | 1 | **5P-0747** | | CABLE (00GA)(BLACK) (46CM) | |
| | 3A | 1 | **1S-7251** | 1 | TERMINAL-RING (FOR 1/2IN BOLT) | |
| | 3B | 1 | **7N-5274** | 2 | COVER-TERMINAL (BLACK) (BATTERY) | |
| | 3C | 1 | **3S-6050** | 2 | TERMINAL AS-BATTERY (NEGATIVE) | |
| | | | | | (EACH INCLUDES) | |
| | | 1 | **1M-6119** | 1 | BOLT (5/16-18X1.375 IN) | |
| | | 1 | **1M-6120** | 1 | NUT (5/16-18 THD) | |
| | 4 | 1 | **7X-7729** | 4 | WASHER (11X25X3MM THK) | |
| M | 5 | 1 | **8T-5005** | 2 | BOLT (M10X1.50X70MM) | |
| | 6 | 1 | **3T-5760** | 2 | BATTERY (12 VOLT) | |
| | 7 | 1 | **4H-2558** | 1 | GROMMET | |
| | 8 | 1 | **8T-4223** | 1 | WASHER-HARD (13.5X25.5X3MM THK) | |
| | 9 | 1 | **7K-1181** | 2 | STRAP-CABLE | |
| | 10 | 1 | **4P-8134** | 1 | CLIP | |
| | 11 | 1 | **3S-2093** | 2 | STRAP-CABLE | |
| M | 12 | 1 | **8T-4133** | 2 | NUT (M10X1.5 THD) | |
| | 13 | 1 | **038-9317** | 2 | TREAD | |
| M | 14 | 1 | **8T-4137** | 2 | BOLT (M10X1.5X20MM) | |

C-CHANGE FROM PREVIOUS TYPE
D-ORDER BY THE METER
E-ORDER BY THE CENTIMETER
M-METRIC PART

*119-8016* **BATTERY GP** ***(contd.)*** **i02005191**

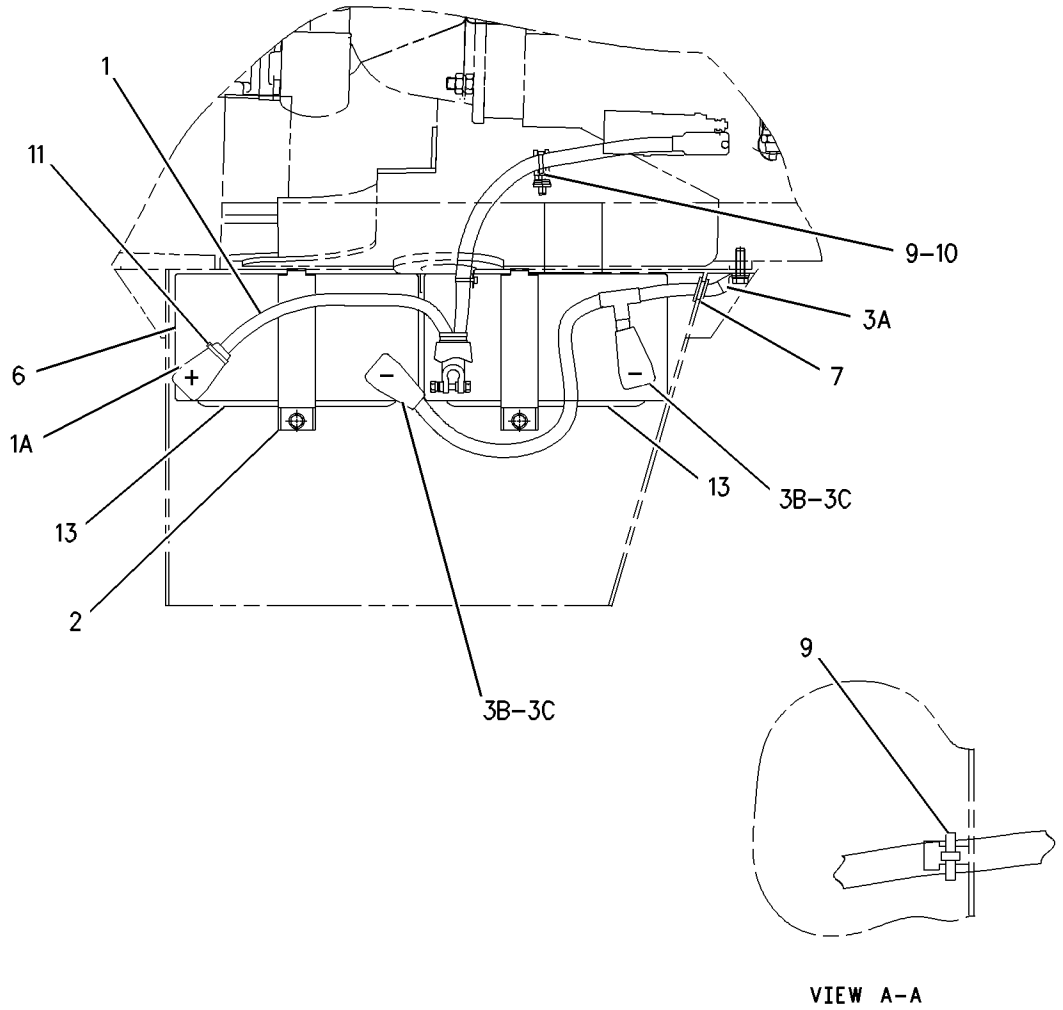


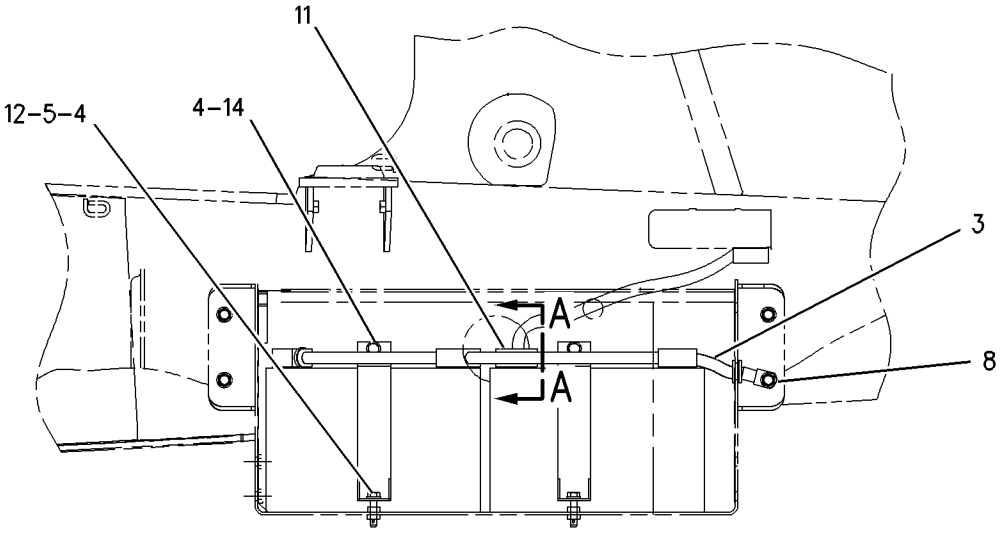


GRAPHIC #1 **<END>** g00802459

# ELECTRICAL AND STARTING SYSTEM

## *122-5865* BATTERY GP

**S/N: BXC1-UP; DSX1-UP**
**PART OF 228-4588, 228-4590 BOX GP-BATTERY**
**AN ATTACHMENT**

**SMCS-1401** **i02005194**

| NOTE | REF NO | GRAPHIC REF | PART NUMBER | QTY | PART NAME 1 2 3 4 5 6 (PRODUCT LEVEL) | SEE PAGE |
|---|---|---|---|---|---|---|
| | 1 | 1 | **3T-5760** | 1 | BATTERY (12 VOLT) | |
| | 2 | 1 | **8T-4223** | 1 | WASHER-HARD (13.5X25.5X3MM THK) | |
| | 3 | 1 | **7X-7729** | 2 | WASHER (11X25X3MM THK) | |
| C | 4 | 1 | **178-9242** | 1 | BRACKET AS | |
| | 5 | 1 | **130-8292** | 1 | CABLE AS-BATTERY (NEGATIVE) | |
| E | | 1 | **5P-0747** | | CABLE (00GA)(BLACK) (13CM) | |
| | 5A | 1 | **1S-7251** | 1 | TERMINAL-RING (FOR 1/2IN BOLT) | |
| | 5B | 1 | **7N-5274** | 1 | COVER-TERMINAL (BLACK) (BATTERY) | |
| | 5C | 1 | **3S-6050** | 1 | TERMINAL AS-BATTERY (NEGATIVE) | |
| | | 1 | **1M-6119** | 1 | BOLT (5/16-18X1.375 IN) | |
| | | 1 | **1M-6120** | 1 | NUT (5/16-18 THD) | |
| | 6 | 1 | **141-1656** | 1 | CABLE AS-BATTERY (POSITIVE) | |
| | | 1 | **1S-7252** | 1 | TERMINAL-RING (FOR 3/8IN BOLT) | |
| E | | 1 | **5P-0761** | | CABLE (00GA)(RED) (56CM) | |
| D | | 1 | **6V-2722** | | TUBE-HEAT SHRINK (0.07M) | |
| | | 1 | **8N-0869** | 1 | COVER-TERMINAL (RED) | |
| | | 1 | **8Y-8081** | | TUBE | |
| | | 1 | **3S-6049** | 1 | TERMINAL AS-BATTERY (POSITIVE) | |
| | | 1 | **1M-6120** | 1 | NUT (5/16-18 THD) | |
| | | 1 | **1M-6119** | 1 | BOLT (5/16-18X1.375 IN) | |
| | 7 | 1 | **4H-2558** | 1 | GROMMET | |
| | 8 | 1 | **7K-1181** | 2 | STRAP-CABLE | |
| M | 9 | 1 | **8T-5005** | 1 | BOLT (M10X1.50X70MM) | |
| | 10 | 1 | **4P-8134** | 1 | CLIP | |
| | 11 | 1 | **3S-2093** | 1 | STRAP-CABLE | |
| M | 12 | 1 | **8T-4133** | 1 | NUT (M10X1.5 THD) | |
| | 13 | 1 | **038-9317** | 1 | TREAD | |
| M | 14 | 1 | **8T-4137** | 2 | BOLT (M10X1.5X20MM) | |
| | 15 | 1 | **8T-4121** | 1 | WASHER-HARD (11X21X2.5MM THK) | |

C-CHANGE FROM PREVIOUS TYPE
D-ORDER BY THE METER
E-ORDER BY THE CENTIMETER
M-METRIC PART

*122-5865* **BATTERY GP** ***(contd.)*** **i02005194**

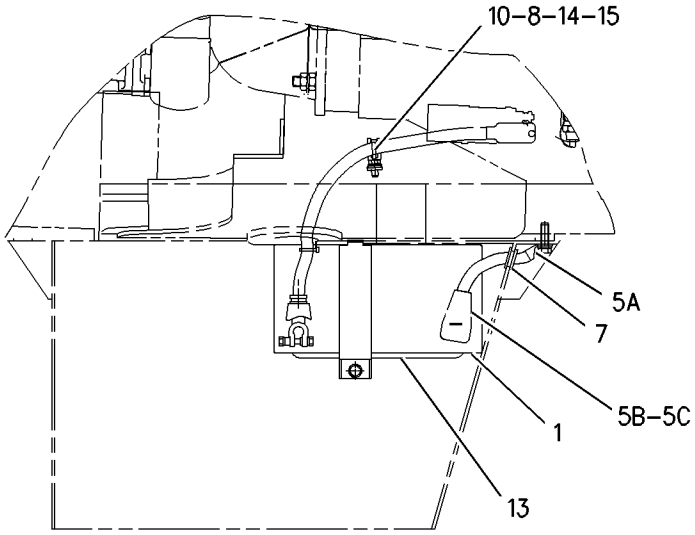


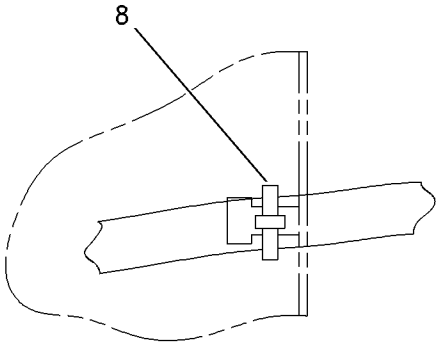


VIEW A–A

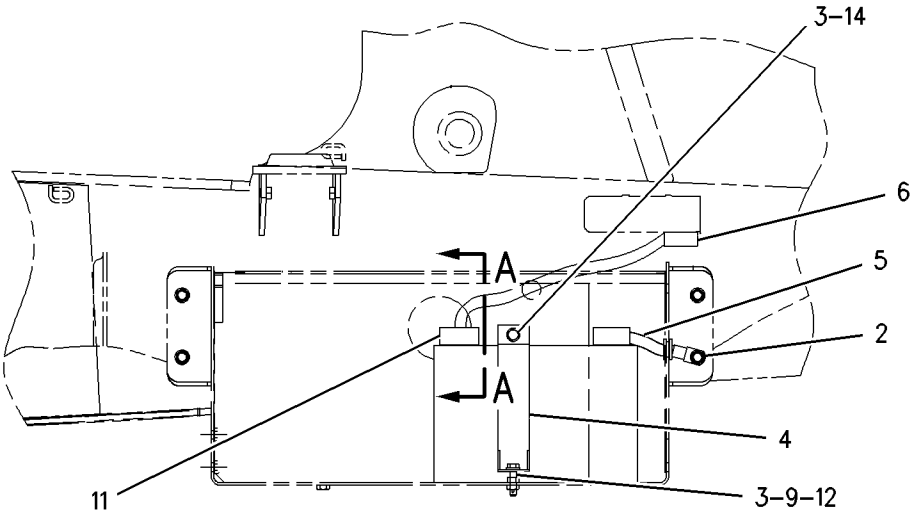


GRAPHIC #1 **<END>** g00852156

# ELECTRICAL AND STARTING SYSTEM

## *223-6181* BATTERY GP

**S/N: BXC1-UP; DSX1-UP**
**PART OF 228-4587 BOX GP-BATTERY**
**AN ATTACHMENT**

**SMCS-1401** **i02005261**

| NOTE | REF NO | GRAPHIC REF | PART NUMBER | QTY | PART NAME 1 2 3 4 5 6 (PRODUCT LEVEL) | SEE PAGE |
|---|---|---|---|---|---|---|
| | 1 | 1 | **3T-5760** | 1 | BATTERY (12 VOLT) | |
| | 2 | 1 | **7K-1181** | 1 | STRAP-CABLE | |
| | 3 | 1 | **8R-0768** | 2 | ROD-RETAINING | |
| | 4 | 1 | **102-4176** | 1 | HOLD-DOWN | |
| | 5 | 1 | **223-5623** | 1 | CABLE AS-BATTERY (POSITIVE) | |
| | | 1 | **1S-7252** | 1 | TERMINAL-RING (FOR 3/8IN BOLT) | |
| | | 1 | **5P-0761** | | CABLE (00GA)(RED) (6CM) | |
| | | 1 | **6V-2722** | | TUBE-HEAT SHRINK (1DM) | |
| | | 1 | **8N-0869** | 1 | COVER-TERMINAL (RED) | |
| | | 1 | **8Y-8081** | | TUBE (58CM) | |
| | | 1 | **3S-6049** | 1 | TERMINAL AS-BATTERY (POSITIVE) | |
| | | 1 | **1M-6119** | 1 | BOLT (5/16-18X1.375 IN) | |
| | | 1 | **1M-6120** | 1 | NUT (5/16-18 THD) | |
| | 6 | 1 | **223-5624** | 1 | CABLE AS-BATTERY (NEGATIVE) | |
| | | 1 | **1S-7251** | 1 | TERMINAL-RING (FOR 1/2IN BOLT) | |
| | | 1 | **5P-0747** | | CABLE (00GA)(BLACK) (27CM) | |
| | | 1 | **7N-5274** | 1 | COVER-TERMINAL (BLACK) | |
| | | 1 | **3S-6050** | 1 | TERMINAL AS-BATTERY (NEGATIVE) | |
| | | 1 | **1M-6119** | 1 | BOLT (5/16-18X1.375 IN) | |
| | | 1 | **1M-6120** | 1 | NUT (5/16-18 THD) | |
| | 7 | 1 | **4H-2558** | 1 | GROMMET | |
| | 8 | 1 | **5P-4116** | 2 | WASHER-HARD (8.8X20.5X2MM THK) | |
| M | 9 | 1 | **8T-7963** | 2 | LOCKNUT (M8X1.25 THD) | |

M-METRIC PART

*223-6181* **BATTERY GP** ***(contd.)*** **i02005261**

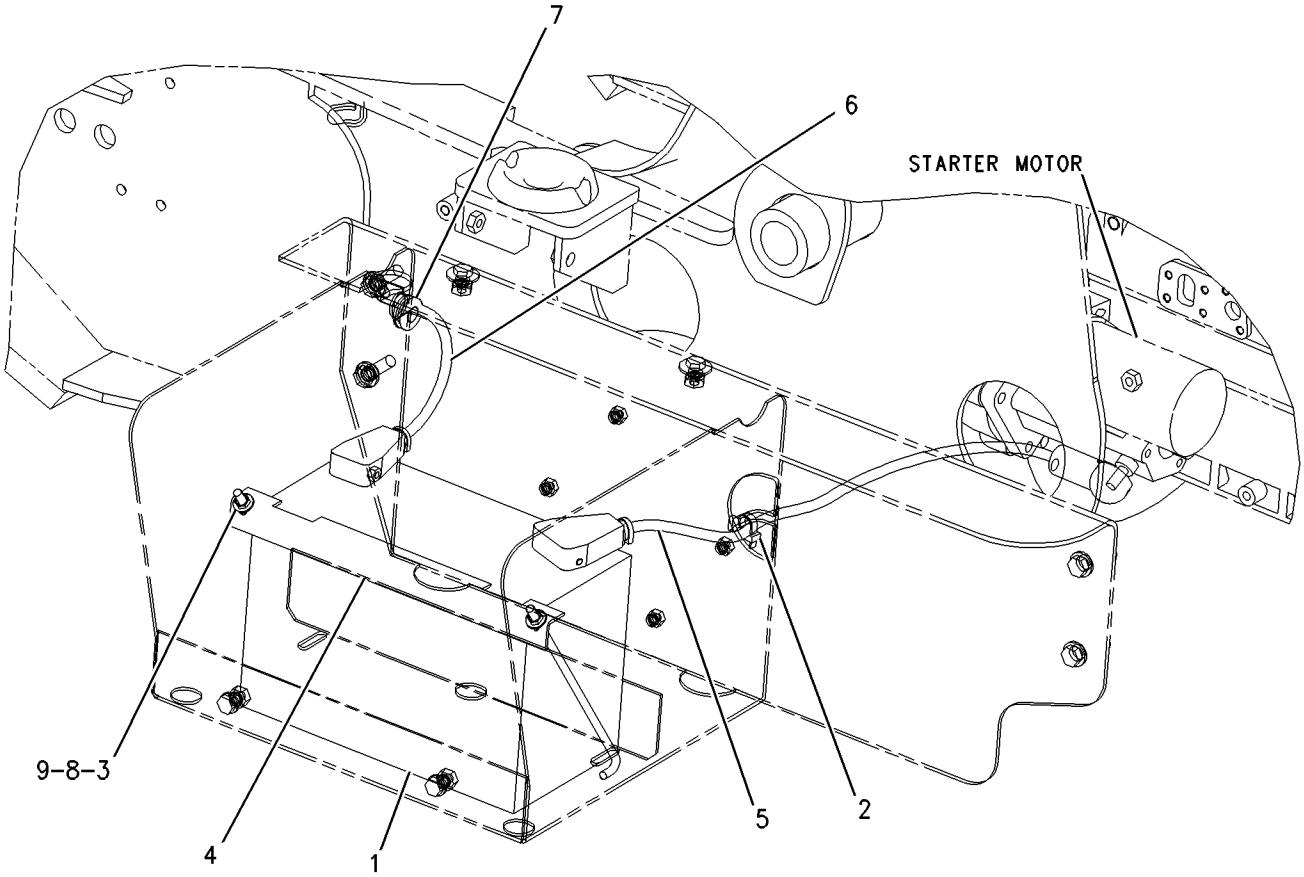


GRAPHIC #1 **<END>** g00997551

# ELECTRICAL AND STARTING SYSTEM

## *235-2854* BATTERY GP—HEAVY DUTY

**S/N: BXC1-UP; DSX1-UP**

**AN ATTACHMENT**

**SMCS-1401** **i01970217**

| NOTE | REF NO | GRAPHIC REF | PART NUMBER | QTY | PART NAME 1 2 3 4 5 6 (PRODUCT LEVEL) | SEE PAGE |
|---|---|---|---|---|---|---|
| | 1 | 1 | **038-9317** | 1 | TREAD | |
| | 2 | 1 | **213-6091** | 1 | CABLE AS-BATTERY | |
| E | 2A | 1 | **5P-0761** | | CABLE (00GA)(RED) (35CM) | |
| | 2B | 1 | **7T-9987** | 1 | COVER-TERMINAL | |
| | | 1 | **8L-8413** | 1 | STRAP-CABLE | |
| | | 1 | **8L-8413** | 2 | STRAP-CABLE | |
| | | 1 | **8N-0869** | 1 | COVER-TERMINAL (RED) | |
| | | 1 | **8S-3020** | 1 | TERMINAL-CABLE | |
| E | 2C | 1 | **8Y-8081** | | TUBE (35CM) | |
| | 2D | 1 | **3S-6049** | 1 | TERMINAL AS-BATTERY (POSITIVE) | |
| | | 1 | **1M-6119** | 1 | BOLT (5/16-18X1.375 IN) | |
| | | 1 | **1M-6120** | 1 | NUT (5/16-18 THD) | |
| | 3 | 1 | **213-6092** | 1 | CABLE AS-BATTERY | |
| | 3A | 1 | **1S-7252** | 1 | TERMINAL-RING | |
| E | 3B | 1 | **5P-0747** | | CABLE (00GA)(BLACK) (47CM) | |
| | 3C | 1 | **7N-5274** | 1 | COVER-TERMINAL (BLACK) | |
| | | 1 | **8L-8413** | 1 | STRAP-CABLE | |
| | | 1 | **8L-8413** | 2 | STRAP-CABLE | |
| | | 1 | **9G-8909** | 1 | COVER-TERMINAL (BLACK) | |
| | 3D | 1 | **3S-6050** | 1 | TERMINAL AS-BATTERY (NEGATIVE) | |
| | | 1 | **1M-6119** | 1 | BOLT (5/16-18X1.375 IN) | |
| | | 1 | **1M-6120** | 1 | NUT (5/16-18 THD) | |
| | 4 | 1 | **230-6368** | 1 | BATTERY (12 VOLT) | |
| | 5 | 1 | **240-4639** | 1 | BRACKET AS | |
| | 6 | 1 | **7X-7729** | 2 | WASHER (11X25X3MM THK) | |
| M | 7 | 1 | **8T-4133** | 1 | NUT (M10X1.5 THD) | |
| M | 8 | 1 | **8T-4137** | 1 | BOLT (M10X1.5X20MM) | |
| M | 9 | 1 | **8T-5005** | 1 | BOLT (M10X1.50X70MM) | |

E-ORDER BY THE CENTIMETER
M-METRIC PART

*235-2854* **BATTERY GP** *(contd.)* **i01970217**

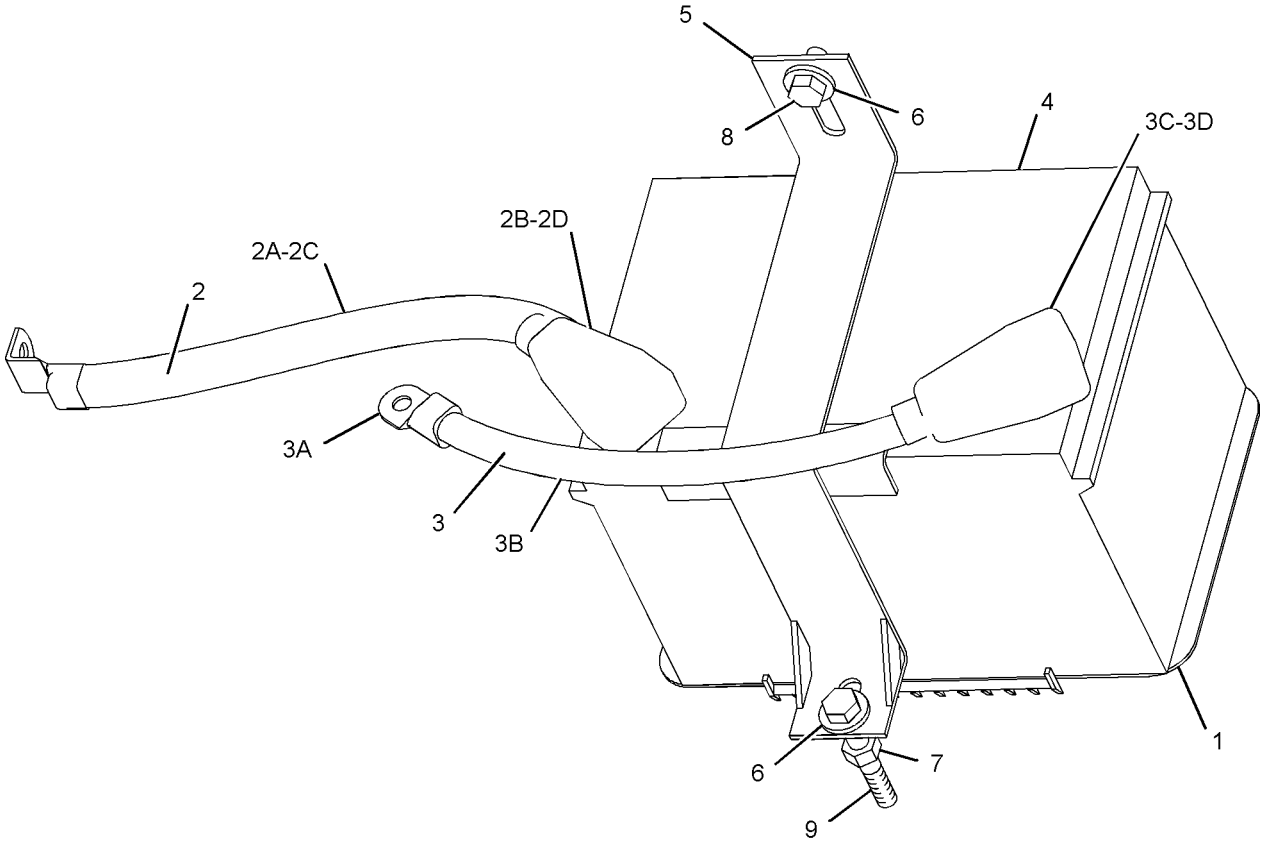


GRAPHIC #1 **<END>** g01023322

# 3E-7843 CONTROL GP-POSITION

**S/N: BXC1-UP; DSX1-UP**
**PART OF 122-1644 WIRING GP-KICKOUT & POSITIONER**
**ALSO AN ATTACHMENT**

**SMCS-5112** **i01736277**

| NOTE | REF NO | GRAPHIC REF | PART NUMBER | QTY | PART NAME 1 2 3 4 5 6 (PRODUCT LEVEL) | SEE PAGE |
|---|---|---|---|---|---|---|
| | 1 | 1 | **9X-5617** | 1 | FILM-INSTRUCTION | |
| | 2 | 1 | **8T-8730** | 3 | SOCKET-CONNECTOR | |
| | 3 | 1 | **155-2260** | 1 | KIT-CONNECTING PLUG (3 PIN) | |
| | | | | | (KIT SERVICES PLUG AS AND WEDGE) | |

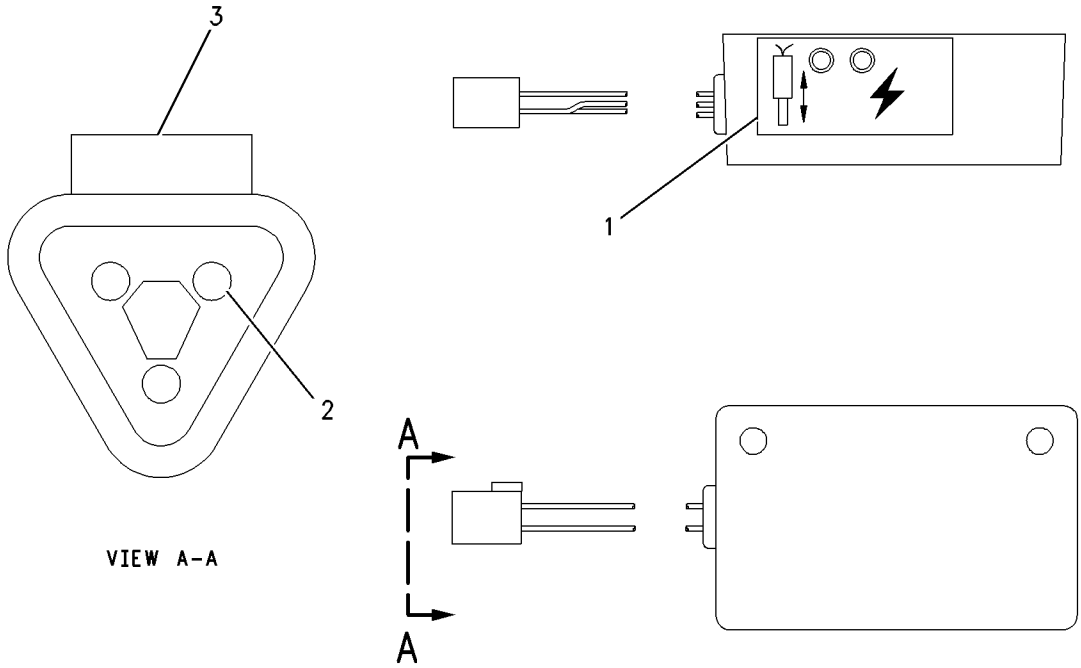


GRAPHIC #1 **<END>** g00868780

# *232-6661* GLOW PLUG GP

**S/N: CRS1-UP**

**PART OF 234-3059, 234-3061 ENGINE AR-PRIMARY**

**AN ATTACHMENT**

**SMCS-1412** **i01988284**

| NOTE | REF NO | GRAPHIC REF | PART NUMBER | QTY | PART NAME 1 2 3 4 5 6 (PRODUCT LEVEL) | SEE PAGE |
|---|---|---|---|---|---|---|
| | 1 | 1 | **244-3316** | 1 | SUPPORT | |
| | 2 | 1 | **232-6662** | 4 | GLOW PLUG | |

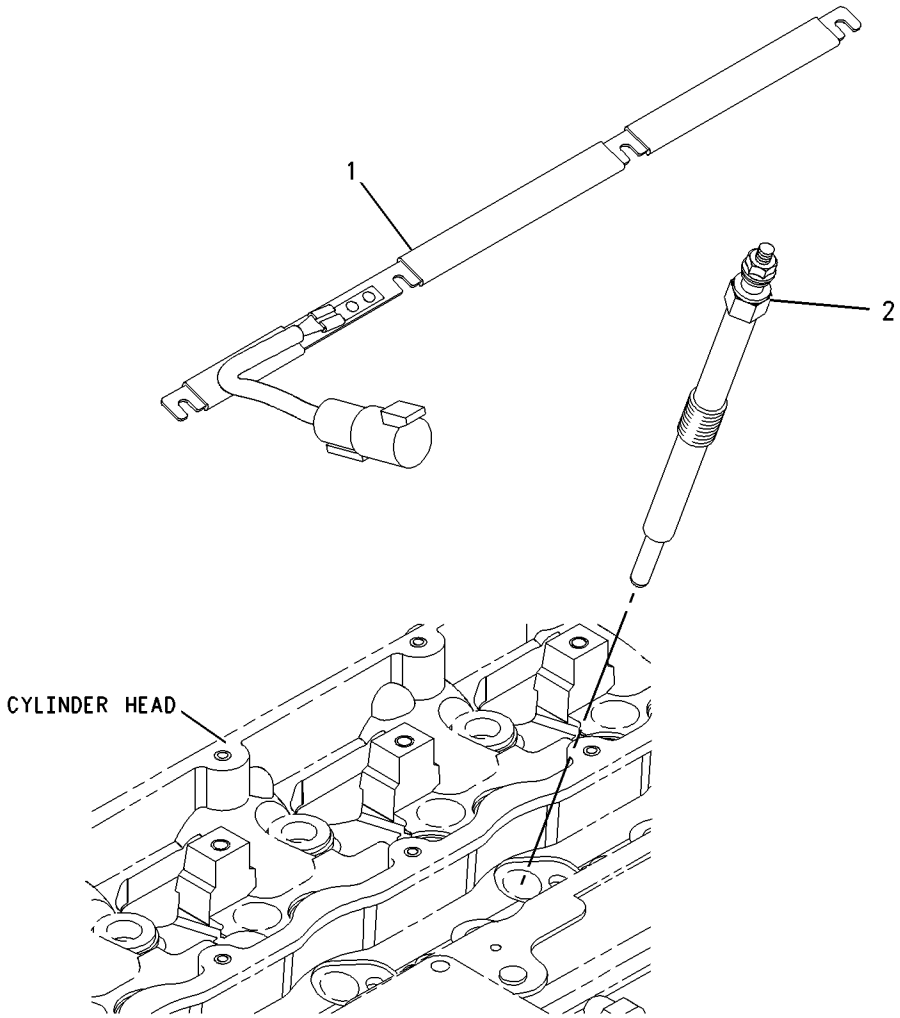


GRAPHIC #1 **<END>** g00950927

# *234-1710* HEATER GP-JACKET WATER

**S/N: BXC1-UP; DSX1-UP**

**AN ATTACHMENT**

**SMCS-1383** **i02007383**

| NOTE | REF NO | GRAPHIC REF | PART NUMBER | QTY | PART NAME 1 2 3 4 5 6 (PRODUCT LEVEL) | SEE PAGE |
|---|---|---|---|---|---|---|
| | 1 | 1 | **231-3058** | 1 | HEATER GP-JACKET WATER | |
| | 1A | 1 | **219-3271** | 1 | ELEMENT AS (JACKET WATER HEATER) (240 VOLT,1000 WATT) | |
| | | 1 | **133-3413** | 1 | KIT-SEAL | |
| | | 1 | **133-6517** | 1 | CAP AS-DUST | |
| | 1B | 1 | **231-3057** | 1 | CORD AS-HEATER | |
| | 2 | 1 | **3S-2093** | 3 | STRAP-CABLE | |

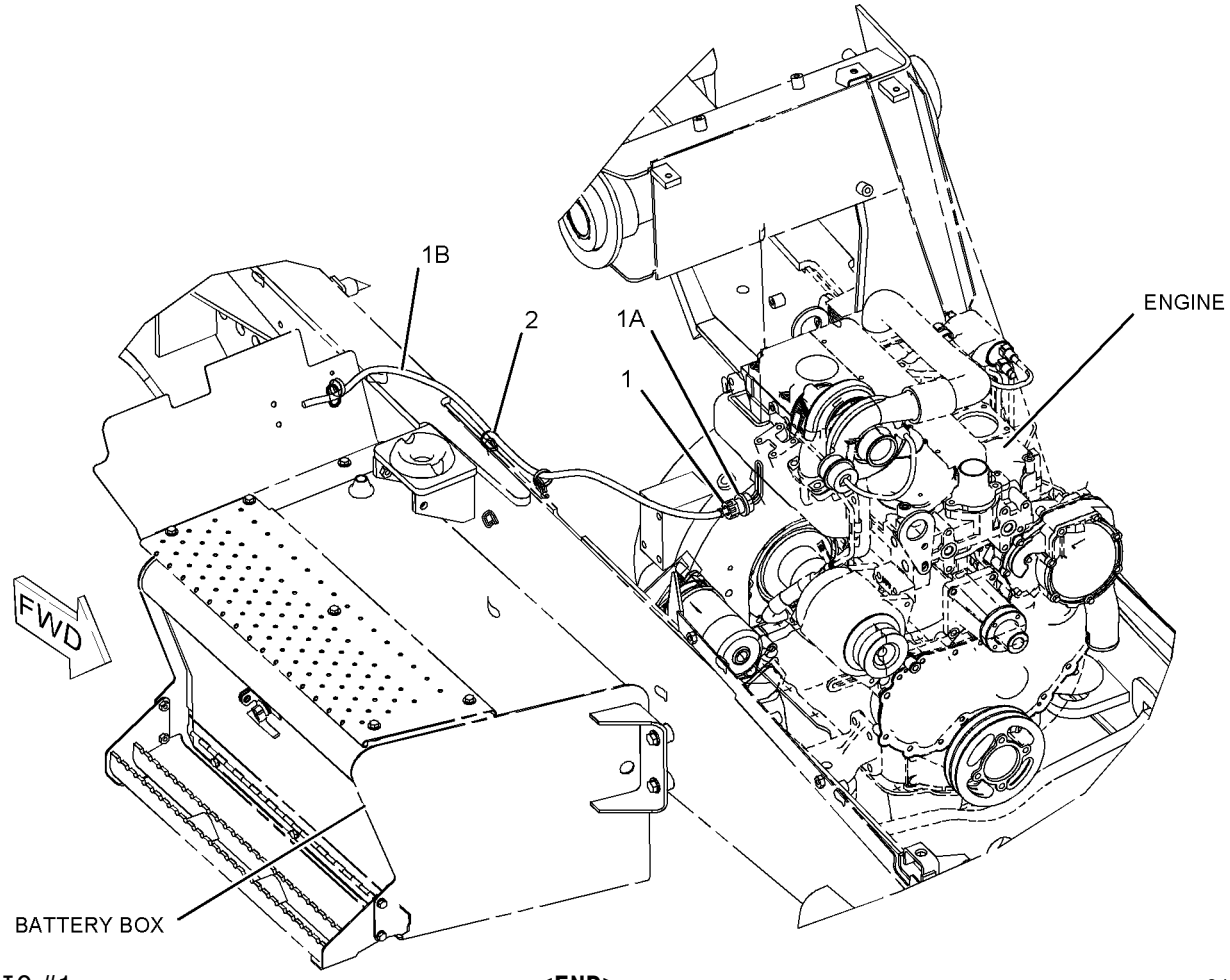


GRAPHIC #1 **<END>** g01023289

# ELECTRICAL AND STARTING SYSTEM

## *186-0310* INSTALLATION GP-SECURITY

**S/N: BXC1-UP; DSX1-UP**

**AN ATTACHMENT**

**SMCS-7631** **i01994661**

| NOTE | REF NO | GRAPHIC REF | PART NUMBER | QTY | PART NAME 1 2 3 4 5 6 (PRODUCT LEVEL) | SEE PAGE |
|---|---|---|---|---|---|---|
| | 1 | 1 | **3E-3371** | 1 | WEDGE-RECEPTACLE LOCK (3-PIN) | |
| | 2 | 1 | **6I-1418** | 3 | SPACER (8.2X12.7X28.7MM THK) | |
| B | 3 | 1 | **6K-0806** | 9 | STRAP-CABLE | |
| | 4 | 1 | **8T-9655** | 6 | MOUNT (ISOLATION) | |
| | 5 | 1 | **9N-0869** | 6 | WASHER-HARD (8.8X25.5X2.0MM THK) | |
| | 6 | 1 | **115-1615** | 1 | RELAY AS (12-VOLT) (SECURITY ENGINE) | |
| Y | 7 | 1 | *186-0304* | 1 | WIRING GP-PLATFORM | 196 |
| | 8 | 1 | **207-5262** | 1 | INSTALLATION GP-SECURITY (MACHINE SECURITY) | |
| | | 1 | **232-9737** | 1 | SOFTWARE GP-MACHINE (MACHINE SECURITY SYSTEM) | |
| | | 1 | **206-5162** | 2 | KEY AS-ELECTRONIC (SECURITY) | |
| | | 1 | **219-6314** | 2 | KEY RING (IDENTIFICATION) | |
| | 9 | 1 | **205-0826** | 1 | FILM (MACHINE SECURITY SYSTEM) | |
| B | 10 | 1 | **198-5389** | 1 | FILM (IGNITION SWITCH) | |
| | 11 | 1 | **205-8257** | 1 | COIL AS (EXCITER) | |
| | 12 | 1 | **211-1813** | 1 | HARNESS AS-CONTROL (SECURITY) | |
| | | 1 | **102-8802** | 1 | KIT-RECEPTACLE (2-PIN) | |
| | | | | | (KIT INCLUDES RECEPTACLE AS. & WEDGE) | |
| | | 1 | **102-8803** | 1 | KIT-RECEPTACLE (3-PIN) | |
| | | | | | (KIT INCLUDES RECEPTACLE AS. & WEDGE) | |
| | | 1 | **102-8804** | 1 | KIT-RECEPTACLE (4-PIN) | |
| | | | | | (KIT INCLUDES RECEPTACLE AS. & WEDGE) | |
| | | 1 | **155-2260** | 2 | KIT-CONNECTING PLUG (3-PIN) | |
| | | | | | (EACH KIT INCLUDES PLUG AS., WEDGES, & INTERFACE SEAL) | |
| | | 1 | **155-2270** | 1 | KIT-CONNECTING PLUG (2-PIN) | |
| | | | | | (KIT INCLUDES PLUG AS., WEDGE, & INTERFACE SEAL) | |
| | | 1 | **155-2271** | 1 | KIT-CONNECTING PLUG (4-PIN) | |
| | | | | | (KIT INCLUDES PLUG AS., WEDGE, & INTERFACE SEAL) | |
| B | 13 | 1 | **224-3385** | 1 | FILM (START) | |
| | 14 | 1 | **222-3870** | 1 | COIL AS (FERRITE) | |
| | | 1 | **102-8802** | 2 | KIT-RECEPTACLE (2-PIN) | |
| | | | | | (EACH KIT INCLUDES RECEPTACLE AS. & WEDGE) | |
| E | | 1 | **9X-1813** | | SLEEVE (15CM) | |
| M | 15 | 1 | **129-3178** | 1 | LOCKNUT (M6X1 THD) | |
| M | 16 | 1 | **147-4502** | 1 | BOLT-SOCKET HEAD (M6X1X10.0MM) | |
| | 17 | 1 | **165-5655** | 1 | LAMP AS (12-VOLT) | |
| | | 1 | **186-3735** | 3 | PIN-CONNECTOR | |
| | 18 | 1 | **102-8803** | 1 | KIT-RECEPTACLE (3-PIN) | |
| | | | | | (KIT INCLUDES RECEPTACLE AS. & WEDGE) | |
| M | 19 | 1 | **5C-7261** | 3 | NUT (M8X1.25 THD) | |
| M | 20 | 1 | **7X-0818** | 3 | BOLT (M8X1.25X45MM) | |

B-USE AS REQUIRED
E-ORDER BY THE CENTIMETER
M-METRIC PART
Y-SEPARATE ILLUSTRATION

*186-0310* **INSTALLATION GP-SECURITY** *(contd.)* **i01994661**

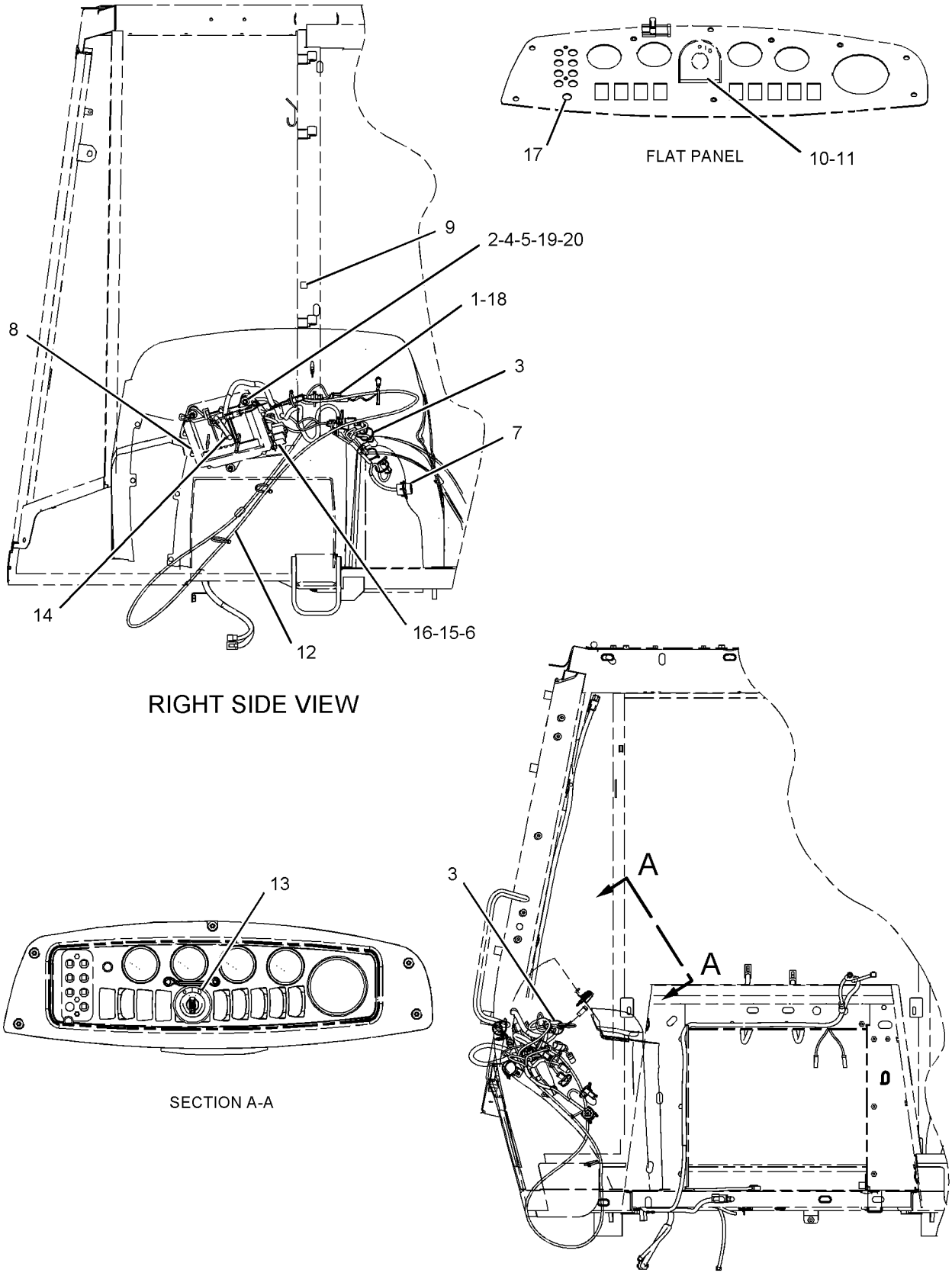


GRAPHIC #1 **<END>** g01037784

# 220-8698 LAMP GP-FLOOD—REAR FOG

**S/N: BXC1-UP; DSX1-UP**
**PART OF 185-8811 LIGHTING GP-ROADING**
**AN ATTACHMENT**

**SMCS-1429, 1434** **i01797371**

| NOTE | REF NO | GRAPHIC REF | PART NUMBER | QTY | PART NAME 1 2 3 4 5 6 (PRODUCT LEVEL) | SEE PAGE |
|---|---|---|---|---|---|---|
| | 1 | 1 | **4S-1988** | 2 | TERMINAL (BLADE-CRIMP TYPE) | |
| | 2 | 1 | **5G-3244** | 1 | LAMP (12 VOLT/21 WATT) | |
| | 3 | 1 | **8I-4721** | 1 | LENS | |
| | 4 | 1 | **1H-3338** | 2 | LOCKWASHER | |
| M | 5 | 1 | **5C-2890** | 2 | NUT (M6X1 THD) | |
| M | 6 | 1 | **6V-8837** | 2 | BOLT (M6X1X16 MM) | |

M-METRIC PART

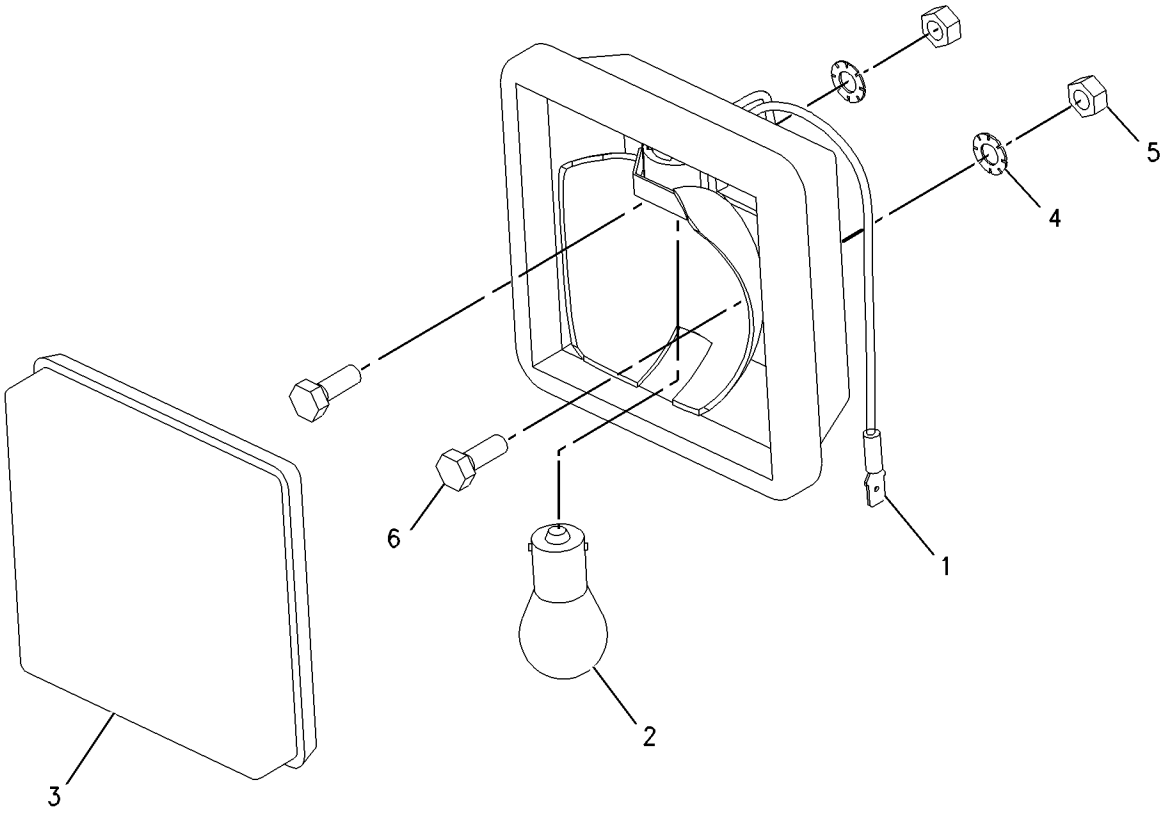


GRAPHIC #1 **<END>** g00934379

# 234-4328 LAMP GP-FLOOD–12 VOLT

**S/N: BXC1-UP; DSX1-UP**
**PART OF 241-0095, 241-0096 LIGHTING GP-FLOOD**
**AN ATTACHMENT**

**SMCS-1429, 1434** **i01967462**

| NOTE | REF NO | GRAPHIC REF | PART NUMBER | QTY | PART NAME 1 2 3 4 5 6 (PRODUCT LEVEL) | SEE PAGE |
|---|---|---|---|---|---|---|
| | 1 | 1 | **9W-0607** | 1 | LAMP (12 VOLT, 55 WATT) | |
| M | 2 | 1 | **8T-4133** | 1 | NUT (M10X1.5 THD) | |
| | 3 | 1 | **9X-4244** | 2 | SCREW | |
| | 4 | 1 | **202-6614** | 1 | LENS AS (FLOOD) | |
| | 5 | 1 | **234-7730** | 1 | BODY AS | |
| | 6 | 1 | **164-7556** | 1 | CLIP | |
| | 7 | 1 | **234-7731** | 1 | BRACKET AS | |

M-METRIC PART

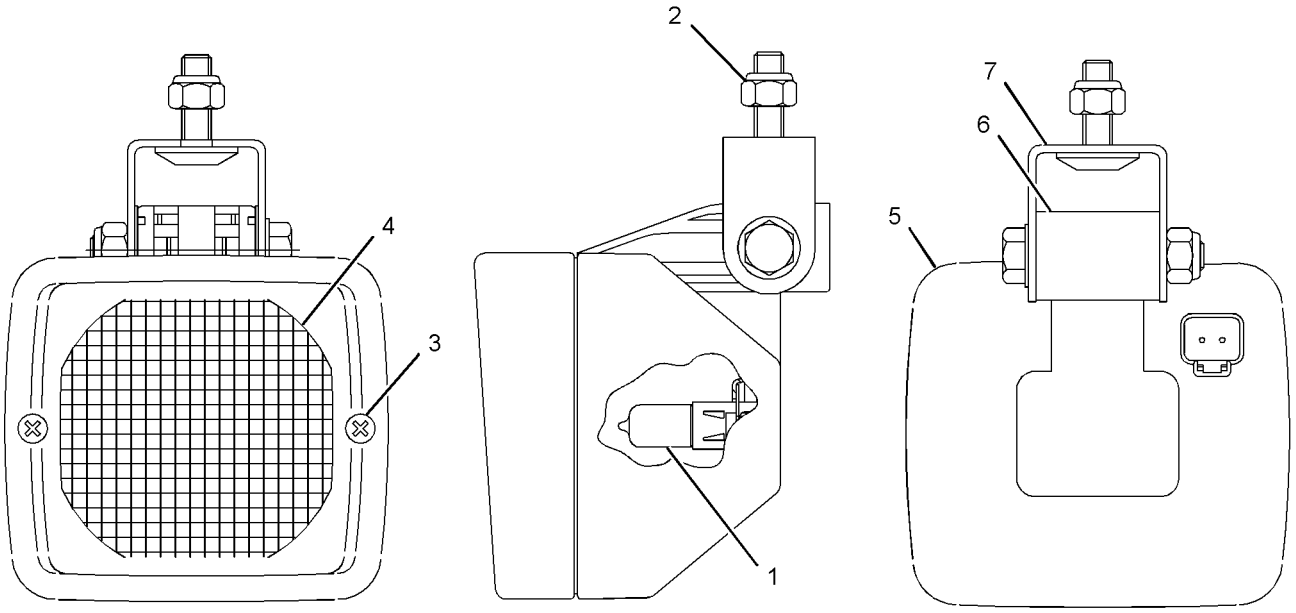


FRONT VIEW LEFT SIDE VIEW REAR VIEW

GRAPHIC #1 **<END>** g01022763

# 234-4329 LAMP GP-FLOOD–12 VOLT

**S/N: BXC1-UP; DSX1-UP**
**PART OF 241-0096 LIGHTING GP-FLOOD**
**AN ATTACHMENT**

**SMCS-1429, 1434** **i01980497**

| NOTE | REF NO | GRAPHIC REF | PART NUMBER | QTY | PART NAME 1 2 3 4 5 6 (PRODUCT LEVEL) | SEE PAGE |
|---|---|---|---|---|---|---|
| | 1 | 1 | **9W-0607** | 1 | LAMP (12 VOLT, 55 WATT) | |
| M | 2 | 1 | **8T-4133** | 1 | NUT (M10X1.5 THD) | |
| | 3 | 1 | **9X-4244** | 2 | SCREW | |
| | 4 | 1 | **202-6611** | 1 | LENS AS (FLOOD) | |
| | 5 | 1 | **234-7730** | 1 | BODY AS | |
| | 6 | 1 | **164-7556** | 1 | CLIP | |
| | 7 | 1 | **234-7731** | 1 | BRACKET AS | |

M-METRIC PART

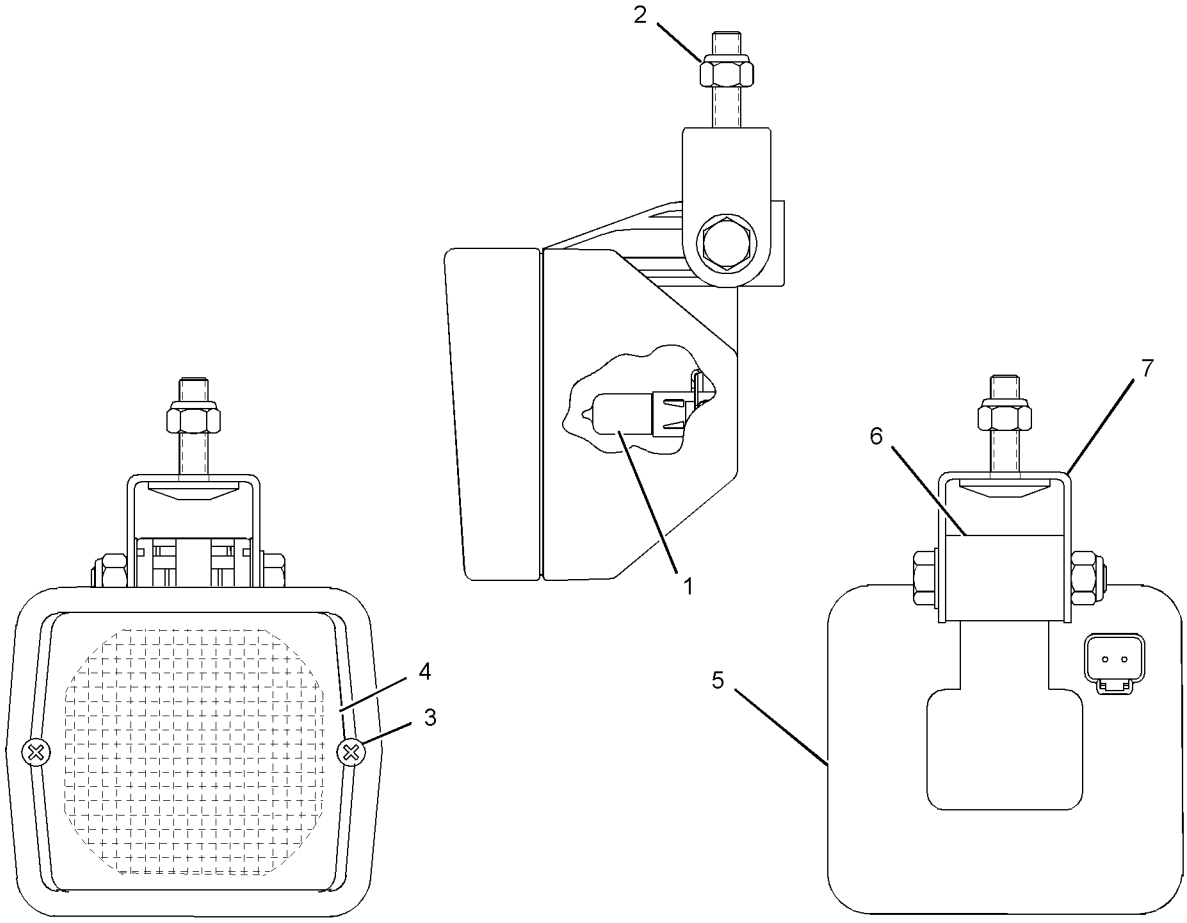


GRAPHIC #1 **<END>** g01026923

# 3E-7584 LAMP GP-HEAD & SIGNAL–RH

**S/N: BXC1-UP; DSX1-UP**
**12 VOLT**
**PART OF 186-0315, 191-6551 LIGHTING GP-ROADING**
**AN ATTACHMENT**

**SMCS-1429** **i02005210**

| NOTE | REF NO | GRAPHIC REF | PART NUMBER | QTY | PART NAME 1 2 3 4 5 6 (PRODUCT LEVEL) | SEE PAGE |
|---|---|---|---|---|---|---|
| | 1 | 1 | **9X-4244** | 4 | SCREW | |
| | 2 | 1 | **100-3251** | 2 | SCREW-LENS | |
| | 3 | 1 | **9X-9865** | 1 | SEAL | |
| | 4 | 1 | **100-3248** | 1 | LENS AS | |
| | 5 | 1 | **9W-3324** | 1 | LAMP-HEAD (12-VOLT, 60/55 WATT) | |
| | 6 | 1 | **100-3247** | 1 | BODY AS-LAMP | |
| M | 7 | 1 | **8T-5005** | 1 | BOLT (M10X1.50X70MM) | |
| M | 8 | 1 | **8T-0389** | 1 | LOCKNUT (M10X1.5 THD) | |
| | 9 | 1 | **100-3253** | 1 | SPACER | |
| | 10 | 1 | **100-3254** | 1 | SPACER | |
| | 11 | 1 | **100-3255** | 1 | WASHER | |
| | 12 | 1 | **102-8805** | 1 | KIT-RECEPTACLE (6-PIN) | |
| | | | | | (KIT SERVICES RECEPTACLE AS AND WEDGE) | |
| | 13 | 1 | **186-3735** | 5 | PIN-CONNECTOR | |
| | 14 | 1 | **3E-3383** | 1 | WEDGE-RECEPTACLE LOCK (6-PIN) | |
| | 15 | 1 | **8T-8737** | 1 | PLUG-SEAL | |
| | 16 | 1 | **100-3246** | 1 | LAMP (12-VOLT, 4-WATT) | |
| | 17 | 1 | **5G-3244** | 1 | LAMP (12-VOLT, 21-WATT) | |
| | 18 | 1 | **100-3250** | 1 | LENS (AMBER) | |

M-METRIC PART

**3E-7584 LAMP GP-HEAD & SIGNAL** *(contd. )* **i02005210**

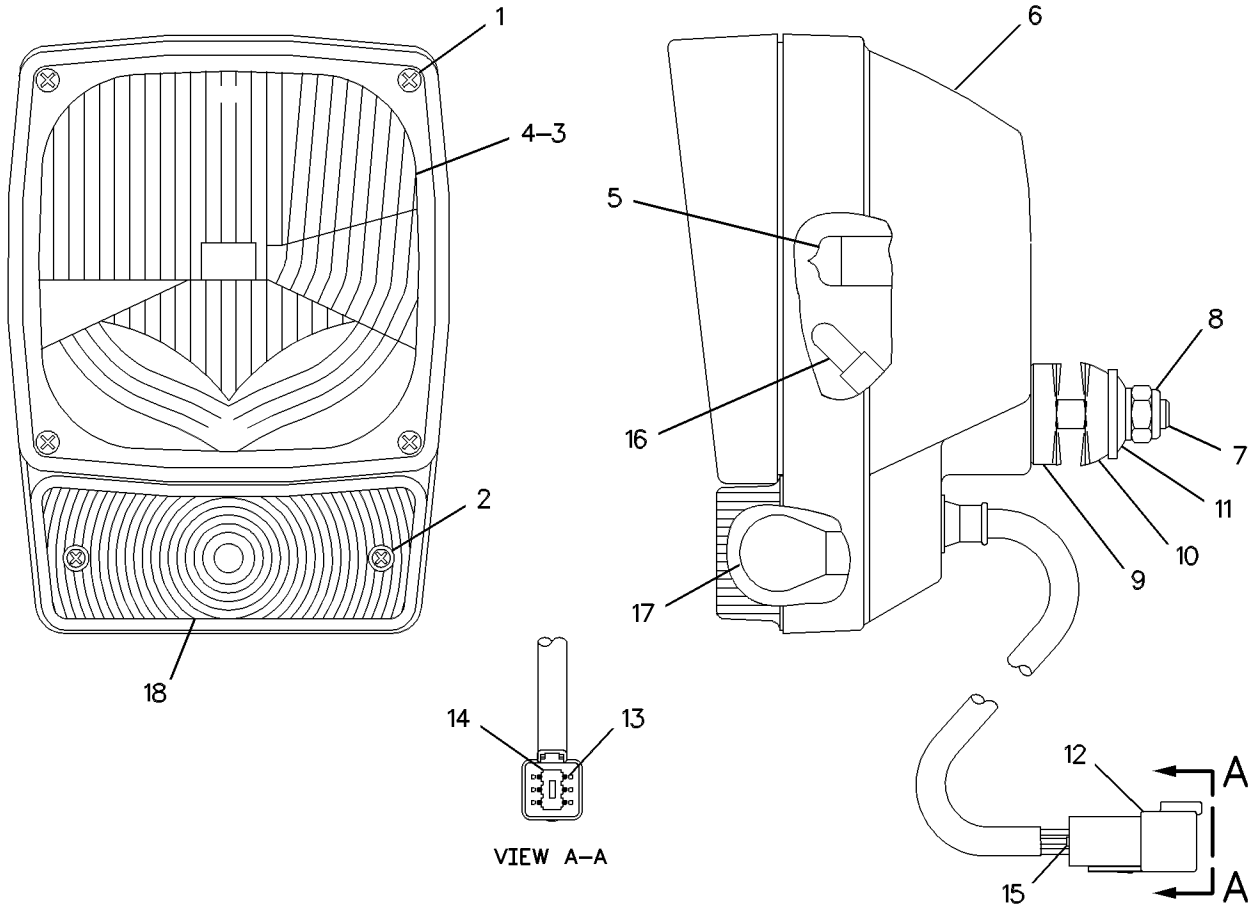


GRAPHIC #1 **<END>** g00547414

# 3E-7585 LAMP GP-HEAD & SIGNAL–LH

**S/N: BXC1-UP; DSX1-UP**
**12 VOLT**
**PART OF 186-0314, 191-6550 LIGHTING GP-ROADING**
**AN ATTACHMENT**

**SMCS-1429** **i02005214**

| NOTE | REF NO | GRAPHIC REF | PART NUMBER | QTY | PART NAME 1 2 3 4 5 6 (PRODUCT LEVEL) | SEE PAGE |
|---|---|---|---|---|---|---|
| | 1 | 1 | **9X-4244** | 4 | SCREW | |
| | 2 | 1 | **100-3251** | 2 | SCREW-LENS | |
| | 3 | 1 | **9X-9865** | 1 | SEAL | |
| | 4 | 1 | **100-3249** | 1 | LENS AS | |
| | 5 | 1 | **9W-3324** | 1 | LAMP-HEAD (12-VOLT, 60/55 WATT) | |
| | 6 | 1 | **100-3247** | 1 | BODY AS-LAMP | |
| M | 7 | 1 | **8T-5005** | 1 | BOLT (M10X1.50X70MM) | |
| M | 8 | 1 | **8T-0389** | 1 | LOCKNUT (M10X1.5 THD) | |
| | 9 | 1 | **100-3253** | 1 | SPACER | |
| | 10 | 1 | **100-3254** | 1 | SPACER | |
| | 11 | 1 | **100-3255** | 1 | WASHER | |
| | 12 | 1 | **102-8805** | 1 | KIT-RECEPTACLE (6-PIN) | |
| | 13 | 1 | **186-3735** | 5 | PIN-CONNECTOR | |
| | 14 | 1 | **3E-3383** | 1 | WEDGE-RECEPTACLE LOCK (6-PIN) | |
| | 15 | 1 | **8T-8737** | 1 | PLUG-SEAL | |
| | 16 | 1 | **100-3246** | 1 | LAMP (12-VOLT, 4-WATT) | |
| | 17 | 1 | **5G-3244** | 1 | LAMP (12-VOLT, 21-WATT) | |
| | 18 | 1 | **100-3250** | 1 | LENS (AMBER) | |

M-METRIC PART

**3E-7585 LAMP GP-HEAD & SIGNAL** *(contd. )* **i02005214**

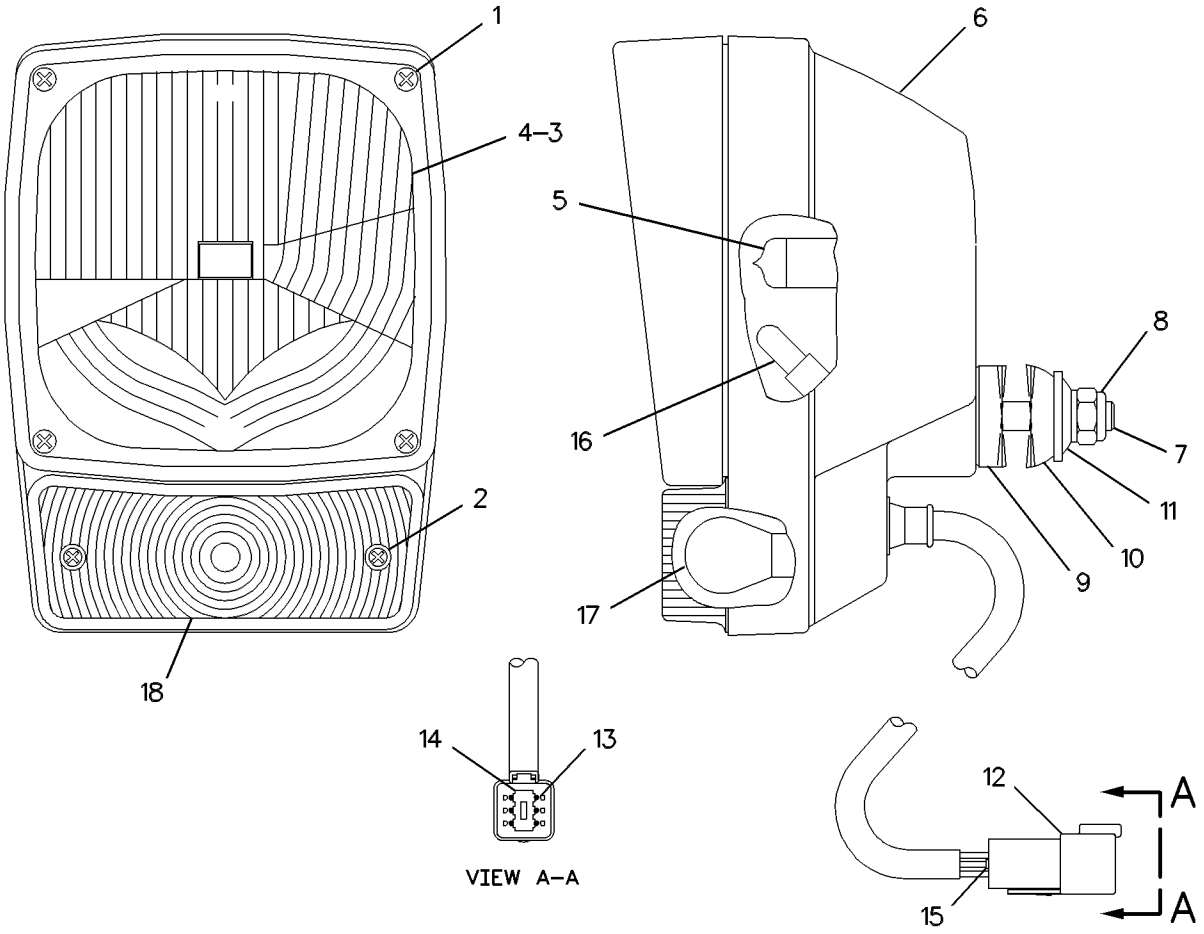


GRAPHIC #1 **<END>** g00460922

# 3E-9382 LAMP GP-HEAD & SIGNAL–RH

**S/N: BXC1-UP; DSX1-UP**
**PART OF 186-0316 LIGHTING GP-ROADING**
**AN ATTACHMENT**

**SMCS-1429** **i01740450**

| NOTE | REF NO | GRAPHIC REF | PART NUMBER | QTY | PART NAME 1 2 3 4 5 6 (PRODUCT LEVEL) | SEE PAGE |
|---|---|---|---|---|---|---|
| | 1 | 1 | **9X-4244** | 4 | SCREW | |
| | 2 | 1 | **100-3251** | 2 | SCREW-LENS | |
| | 3 | 1 | **9X-9865** | 1 | SEAL | |
| | 4 | 1 | **100-3248** | 1 | LENS AS | |
| | 5 | 1 | **5G-3244** | 1 | LAMP (12 VOLT) (21 WATT) | |
| | 6 | 1 | **136-3846** | 1 | BODY AS-LAMP | |
| M | 7 | 1 | **8T-5005** | 1 | BOLT (M10X1.50X70MM) | |
| M | 8 | 1 | **8T-0389** | 1 | LOCKNUT (M10X1.5 THD) | |
| | 9 | 1 | **100-3253** | 1 | SPACER-SPHERICAL | |
| | 10 | 1 | **100-3254** | 1 | SPACER-SPHERICAL | |
| | 11 | 1 | **100-3255** | 1 | WASHER | |
| | 12 | 1 | **102-8805** | 1 | KIT-RECEPTACLE (6 PIN) | |
| | | | | | (KIT SERVICES RECEPTACLE AS AND WEDGE) | |
| | 13 | 1 | **186-3735** | 5 | PIN-CONNECTOR | |
| | 14 | 1 | **3E-3383** | 1 | WEDGE-RECEPTACLE LOCK | |
| | 15 | 1 | **8T-8737** | 1 | PLUG-SEAL | |
| | 16 | 1 | **100-3246** | 2 | LAMP (12 VOLT) (MINIATURE) | |
| | 17 | 1 | **9W-3324** | 1 | LAMP-HEAD (12 VOLT) | |
| | 18 | 1 | **100-3250** | 1 | LENS-AMBER | |
| | 19 | 1 | **136-3848** | 1 | LENS AS | |

M-METRIC PART

**3E-9382 LAMP GP-HEAD & SIGNAL** *(contd. )* **i01740450**

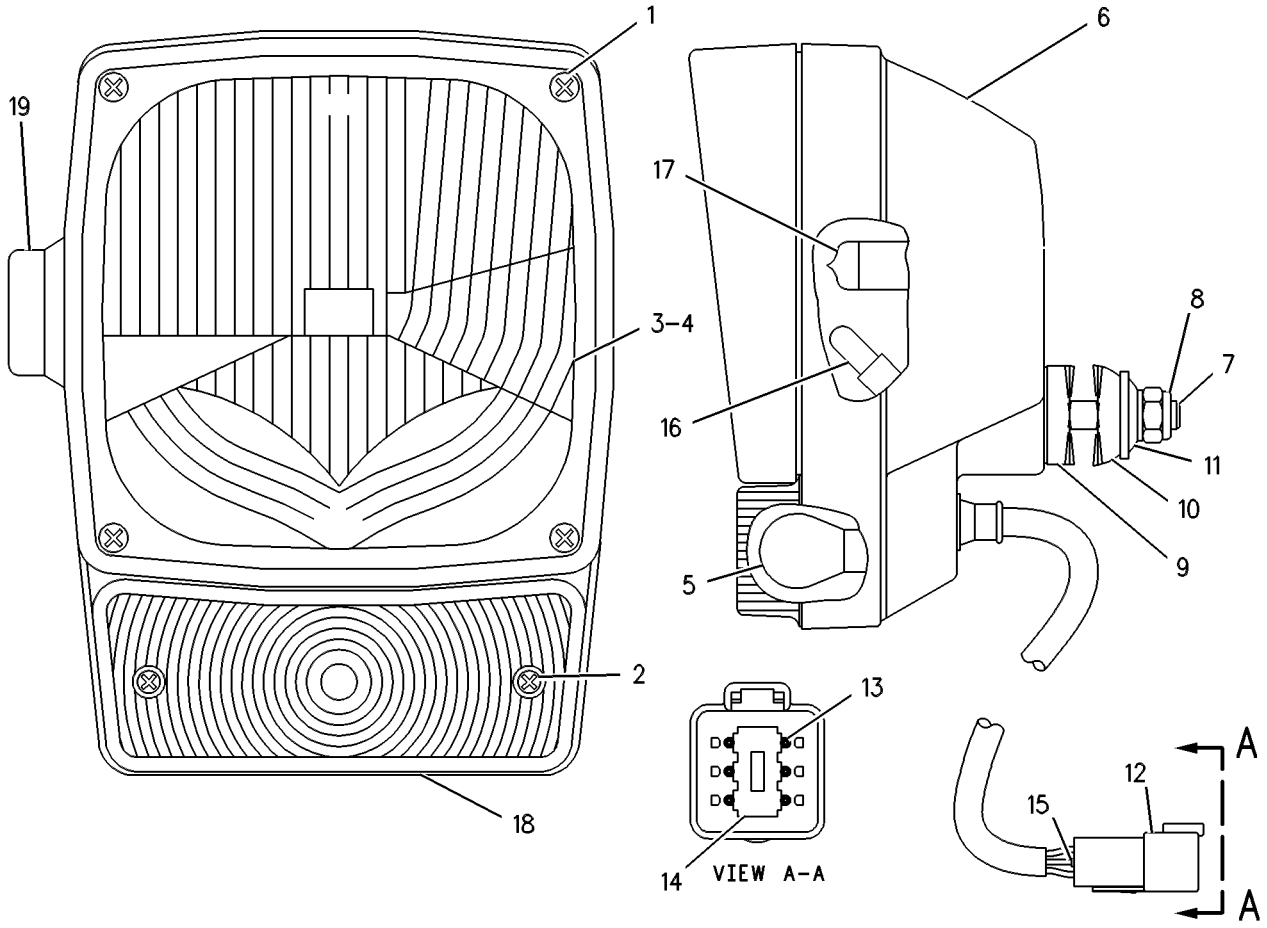


GRAPHIC #1 **<END>** g00265786

# 104-5255 LAMP GP-HEAD & SIGNAL–LH

**S/N: BXC1-UP; DSX1-UP**
**PART OF 186-0316 LIGHTING GP-ROADING**
**AN ATTACHMENT**

**SMCS-1429** **i01740455**

| NOTE | REF NO | GRAPHIC REF | PART NUMBER | QTY | PART NAME 1 2 3 4 5 6 (PRODUCT LEVEL) | SEE PAGE |
|---|---|---|---|---|---|---|
| | 1 | 1 | **9X-4244** | 4 | SCREW | |
| | 2 | 1 | **100-3251** | 2 | SCREW-LENS | |
| | 3 | 1 | **9X-9865** | 1 | SEAL | |
| | 4 | 1 | **100-3248** | 1 | LENS AS | |
| | 5 | 1 | **5G-3244** | 1 | LAMP (12 VOLT) (21 WATT) | |
| | 6 | 1 | **136-3848** | 1 | LENS AS | |
| M | 7 | 1 | **8T-5005** | 1 | BOLT (M10X1.50X70MM) | |
| M | 8 | 1 | **8T-0389** | 1 | LOCKNUT (M10X1.5 THD) | |
| | 9 | 1 | **100-3253** | 1 | SPACER-SPHERICAL | |
| | 10 | 1 | **100-3254** | 1 | SPACER-SPHERICAL | |
| | 11 | 1 | **100-3255** | 1 | WASHER | |
| | 12 | 1 | **102-8805** | 1 | KIT-RECEPTACLE (6 PIN) | |
| | | | | | (KIT SERVICES RECEPTACLE AS AND WEDGE) | |
| | 13 | 1 | **186-3735** | 5 | PIN-CONNECTOR | |
| | 14 | 1 | **3E-3383** | 1 | WEDGE-RECEPTACLE LOCK | |
| | 15 | 1 | **8T-8737** | 1 | PLUG-SEAL | |
| | 16 | 1 | **100-3246** | 2 | LAMP (12 VOLT) (MINIATURE) | |
| | 17 | 1 | **9W-3324** | 1 | LAMP-HEAD (12 VOLT) | |
| | 18 | 1 | **100-3250** | 1 | LENS-AMBER | |
| | 19 | 1 | **136-3845** | 1 | BODY AS-LAMP | |

M-METRIC PART

**104-5255 LAMP GP-HEAD & SIGNAL** *(contd. )* **i01740455**

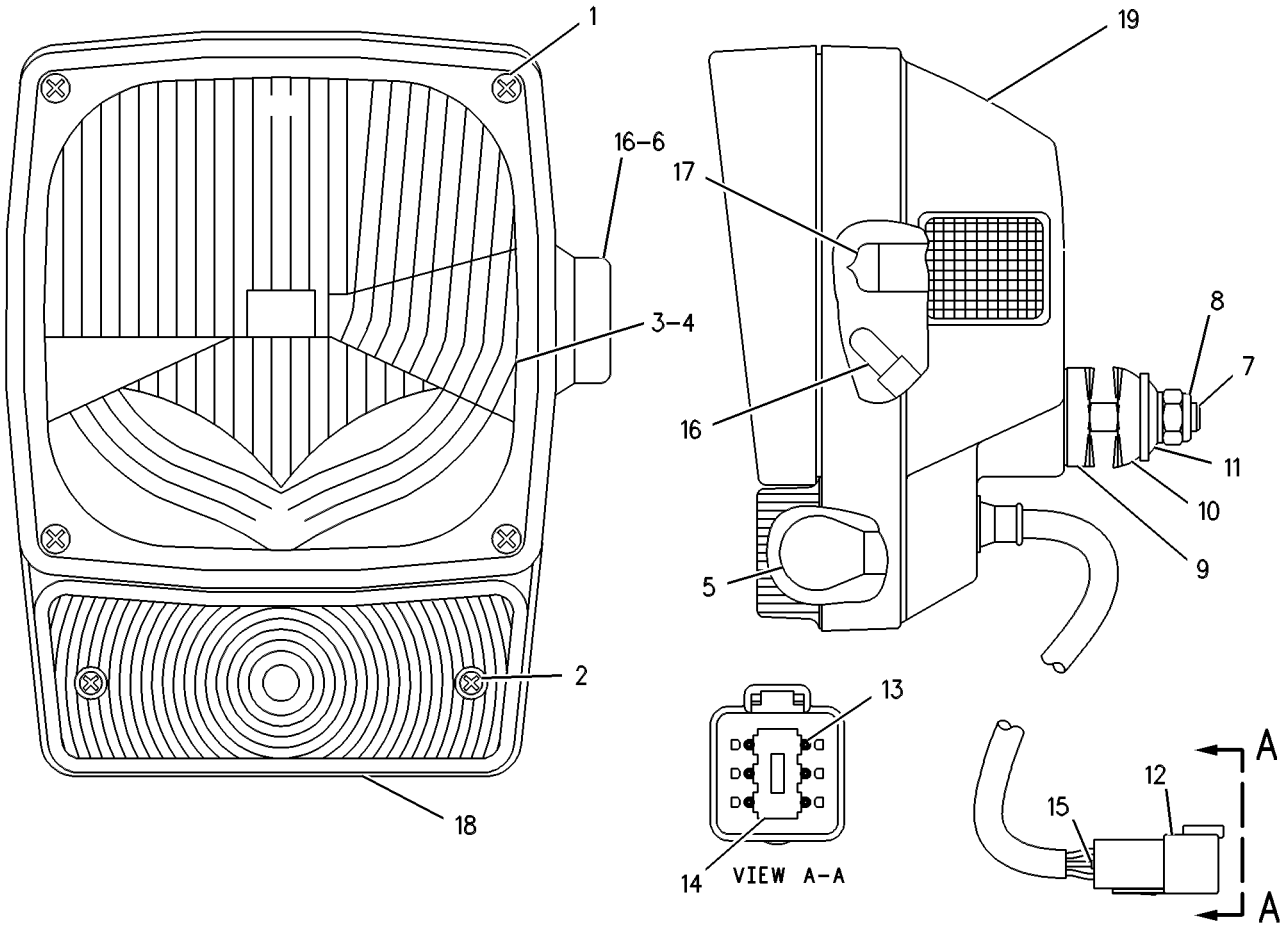


GRAPHIC #1 **<END>** g00269389

# *101-4448* LAMP GP-REGISTRATION PLATE

**S/N: BXC1-UP; DSX1-UP**
**PART OF 101-4447, 110-6017 MOUNTING GP-REGISTRATION**
**AN ATTACHMENT**

**SMCS-1429** **i01496005**

| NOTE | REF NO | GRAPHIC REF | PART NUMBER | QTY | PART NAME 1 2 3 4 5 6 (PRODUCT LEVEL) | SEE PAGE |
|---|---|---|---|---|---|---|
| | 1 | 1 | **195-9712** | 1 | LAMP (12 VOLT) | |
| M | 2 | 1 | **5C-2874** | 2 | NUT (M5X.8 THD) | |
| | 3 | 1 | **8F-1434** | 2 | LOCKWASHER | |
| M | 4 | 1 | **8T-4753** | 2 | SCREW (M5X0.8X20MM) | |
| | 5 | 1 | **9M-2307** | 2 | WASHER (.203X.75X.075 IN THK) | |

M-METRIC PART

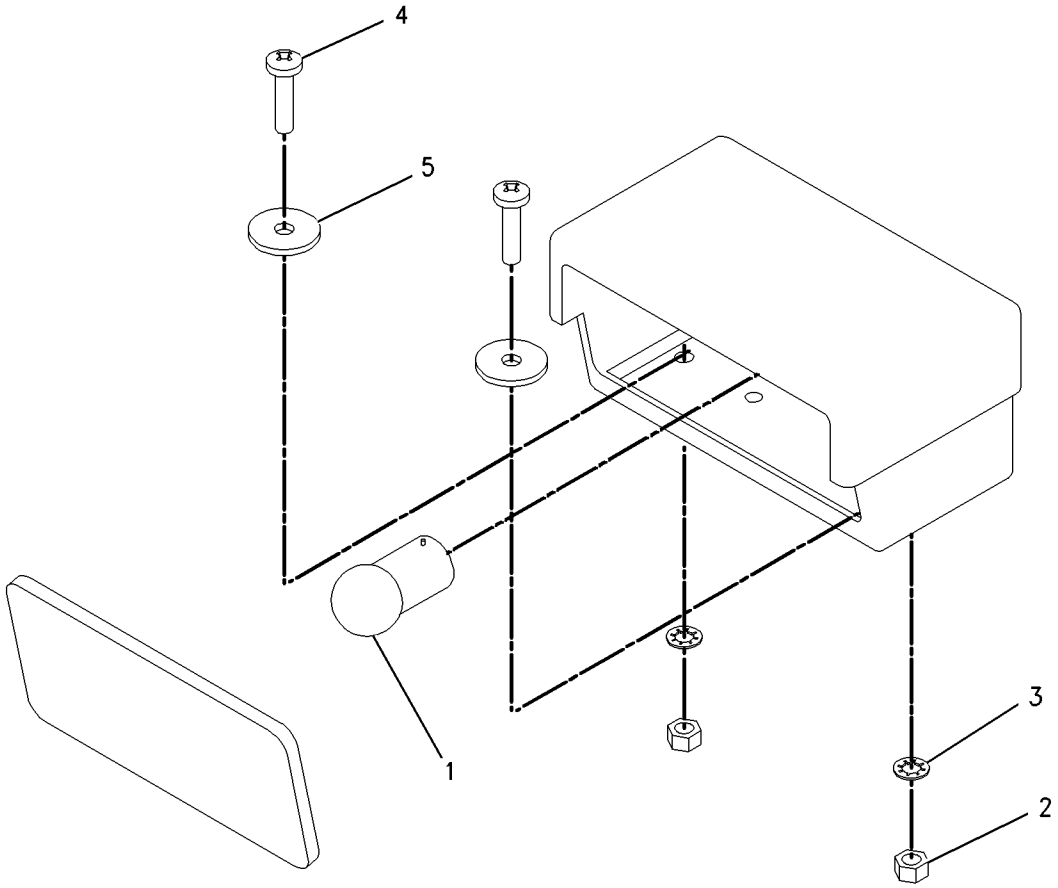


GRAPHIC #1 **<END>** g00776774

# *9R-2385* LAMP GP-STOP & TAIL

**S/N: BXC1-UP; DSX1-UP**

**PART OF 186-0314, 186-0315, 186-0316, 191-6550, 191-6551 LIGHTING GP-ROADING AN ATTACHMENT**

**SMCS-1432** **i02000026**

| NOTE | REF NO | GRAPHIC REF | PART NUMBER | QTY | PART NAME 1 2 3 4 5 6 (PRODUCT LEVEL) | SEE PAGE |
|---|---|---|---|---|---|---|
| | 1 | 1 | **9R-9568** | 1 | HARNESS AS-REAR LIGHTING | |
| | | 1 | **102-8804** | 1 | KIT-RECEPTACLE (4-PIN) | |
| | | | | | (KIT SERVICES RECEPTACLE AS. AND WEDGE) | |
| Y | 2 | 1 | **092-2992** | 1 | LAMP GP-STOP & TAIL | 130 |

Y-SEPARATE ILLUSTRATION

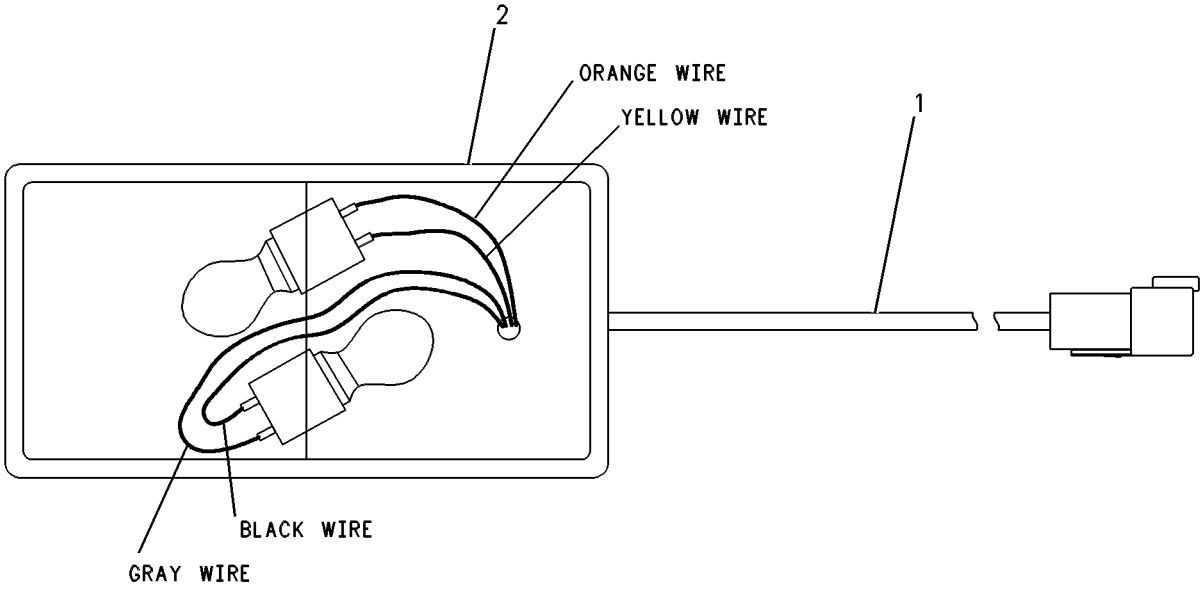


GRAPHIC #1 **<END>** g00258939

# 092-2992 LAMP GP-STOP & TAIL–12 VOLT

**S/N: BXC1-UP; DSX1-UP**
**PART OF 9R-2385 LAMP GP-STOP & TAIL**
**AN ATTACHMENT**

**SMCS-1432** **i01936440**

| NOTE | REF NO | GRAPHIC REF | PART NUMBER | QTY | PART NAME 1 2 3 4 5 6 (PRODUCT LEVEL) | SEE PAGE |
|---|---|---|---|---|---|---|
| | 1 | 1 | **3C-4883** | 1 | LAMP (12VOLT/21WATT) (TURN SIGNAL) | |
| | 2 | 1 | **3C-6516** | 1 | LAMP (12VOLT/21/5WATT) (STOP) | |
| | 3 | 1 | **092-6279** | 1 | LENS (STOP/TURN SIGNAL) | |
| M | 4 | 1 | **3C-3681** | 4 | NUT | |
| M | 5 | 1 | **3C-3682** | 4 | SCREW | |

M-METRIC PART

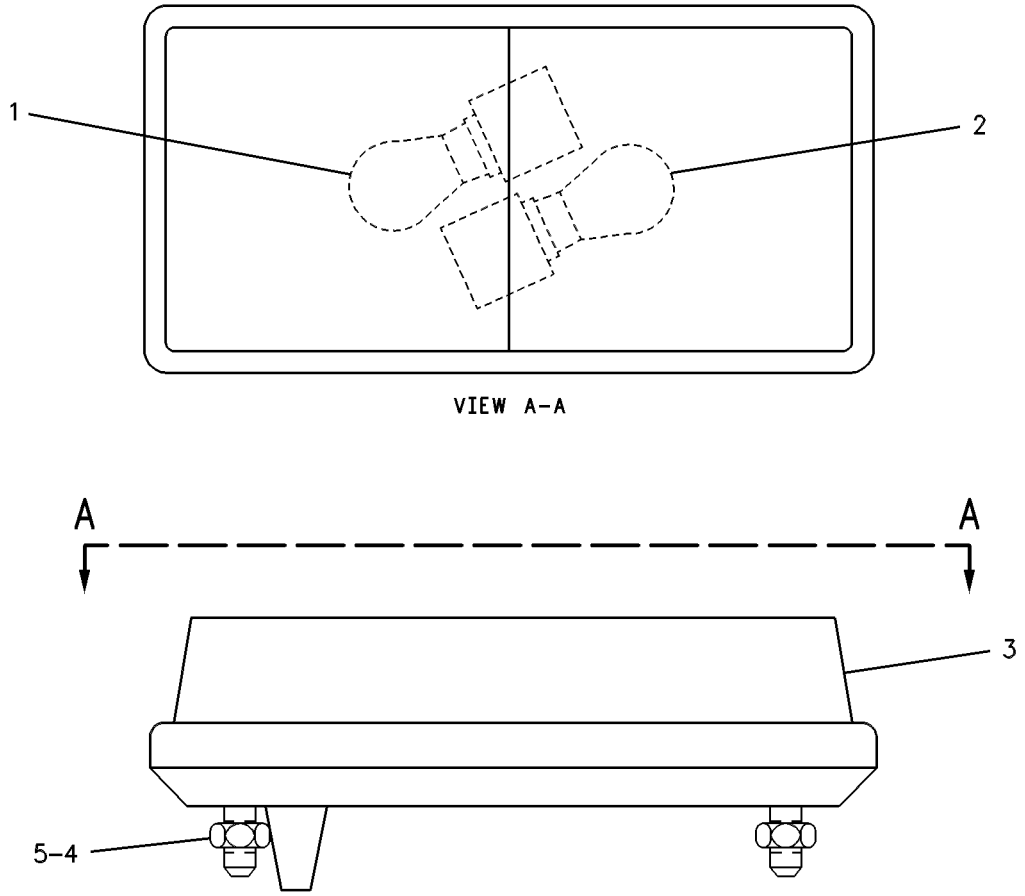


GRAPHIC #1 **<END>** g00257025

# 180-3663 LAMP GP-WARNING BEACON

**S/N: BXC1-UP; DSX1-UP**

**PART OF 186-2737 LIGHTING GP-WARNING, 141-8292 LIGHTING GP-WARNING BEACON AN ATTACHMENT**

**SMCS-1431** **i02005242**

| NOTE | REF NO | GRAPHIC REF | PART NUMBER | QTY | PART NAME 1 2 3 4 5 6 (PRODUCT LEVEL) | SEE PAGE |
|---|---|---|---|---|---|---|
| | 1 | 1 | **185-7015** | 1 | LAMP AS | |
| | 2 | 1 | **9X-8139** | 1 | BELT-DRIVE (WARNING BEACON) | |
| | 3 | 1 | **9X-8121** | 1 | LENS (AMBER) | |
| | 4 | 1 | **9X-8118** | 1 | LAMP (12-VOLT, 55-WATT) | |
| | 5 | 1 | **8T-4205** | 3 | WASHER-HARD (7.2X14.5X2MM THK) | |
| M | 6 | 1 | **5C-2890** | 3 | NUT (M6X1 THD) | |
| | 7 | 1 | **179-5434** | 1 | PLUG AS | |
| | 8 | 1 | **3K-8782** | 1 | FUSE (10-AMPERE) | |

M-METRIC PART

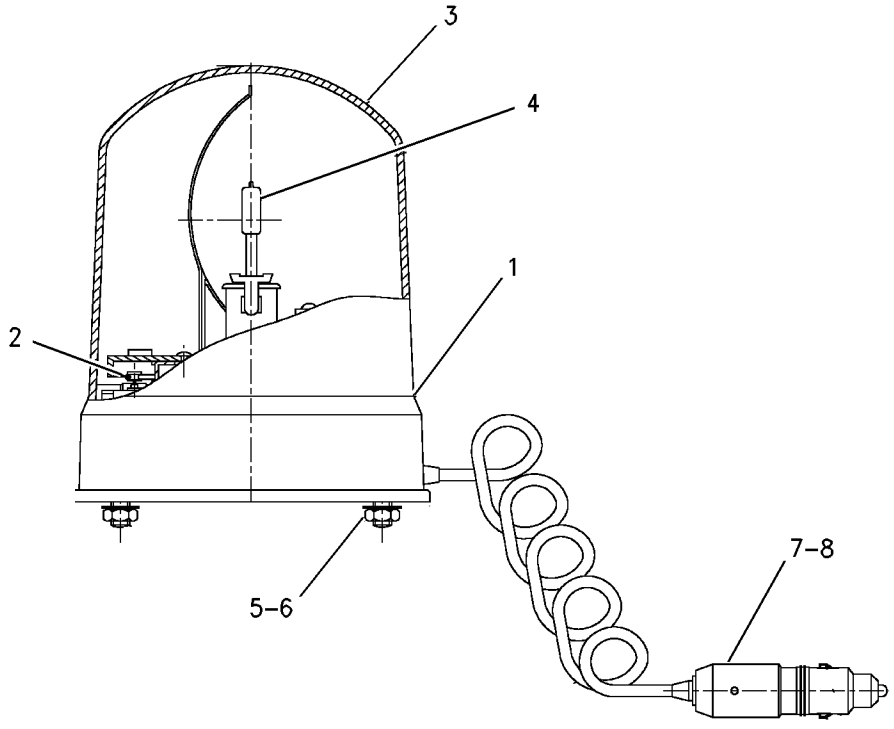


GRAPHIC #1 **<END>** g00781707

# *180-3664* LAMP GP-WARNING BEACON

**S/N: BXC1-UP; DSX1-UP**
**PART OF 104-9502 LIGHTING GP-WARNING BEACON**
**AN ATTACHMENT**

**SMCS-1431** **i02000029**

| NOTE | REF NO | GRAPHIC REF | PART NUMBER | QTY | PART NAME 1 2 3 4 5 6 (PRODUCT LEVEL) | SEE PAGE |
|---|---|---|---|---|---|---|
| | 1 | 1 | **185-7016** | 1 | LAMP AS (ROTATING WARNING) | |
| | 2 | 1 | **9X-8139** | 1 | BELT-DRIVE (WARNING BEACON) | |
| | 3 | 1 | **9X-8121** | 1 | LENS (AMBER) | |
| | 4 | 1 | **9X-8118** | 1 | LAMP (12 VOLT, 55 WATT) | |
| | 5 | 1 | **179-5434** | 1 | PLUG AS | |
| | 6 | 1 | **3K-8782** | 1 | FUSE (10-AMPERE) | |

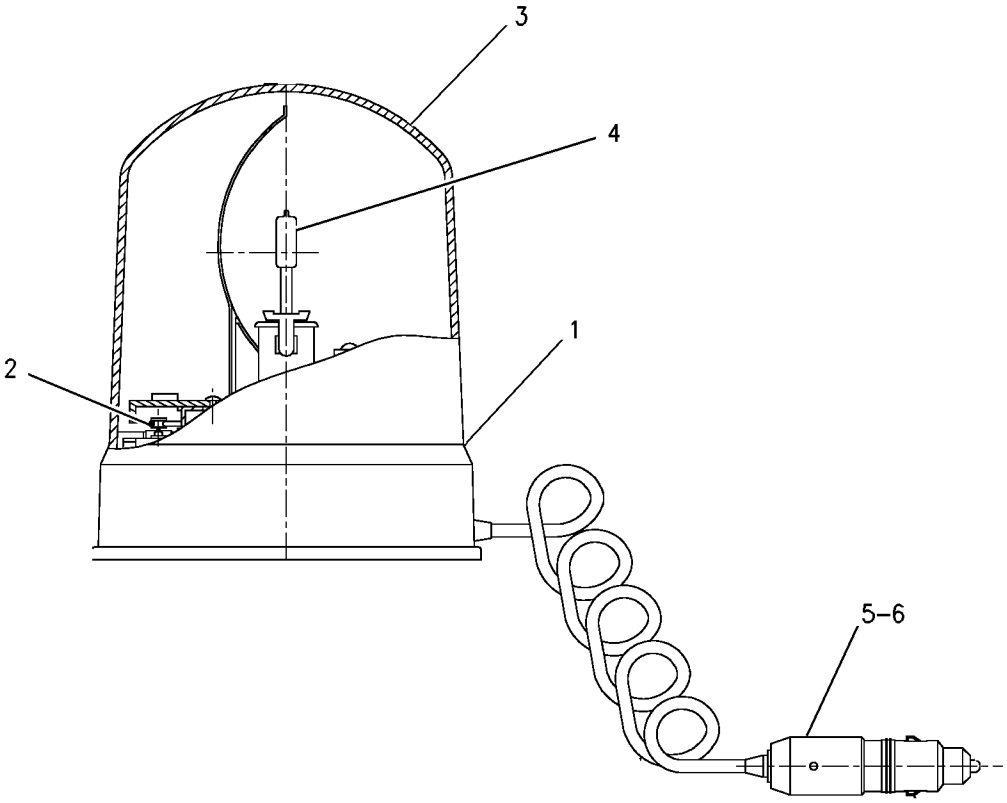


GRAPHIC #1 **<END>** g00781826

# ELECTRICAL AND STARTING SYSTEM

## *185-8815* LIGHTING GP-FLOOD

**S/N: BXC1-UP; DSX1-UP**
**PART OF 214-7008, 214-7009 CAB AR-ENCLOSED ROPS**
**AN ATTACHMENT**

**SMCS-1434** **i01662538**

| NOTE | REF NO | GRAPHIC REF | PART NUMBER | QTY | PART NAME 1 2 3 4 5 6 (PRODUCT LEVEL) | SEE PAGE |
|---|---|---|---|---|---|---|
| D | 1 | 1 | **141-0924** | | SEAL (5.8M) | |
| | 2 | 1 | **3E-9362** | 2 | RELAY AS (12 VOLT DC) | |
| | 3 | 1 | **3S-2093** | 14 | STRAP-CABLE | |
| | 4 | 1 | **105-8069** | 4 | LAMP GP-FLOOD | |
| | | | | | (EACH INCLUDES) | |
| | | 1 | **9W-0607** | 1 | LAMP (12 VOLT)(55 WATT) | |
| | | 1 | **142-5789** | 4 | SCREW | |
| | 5 | 1 | **113-8490** | 2 | FUSE (10 AMP) | |
| | 6 | 1 | **113-8491** | 3 | FUSE (15 AMP) | |
| | 7 | 1 | **146-9439** | 3 | RELAY AS (12 VOLT) | |
| | 8 | 1 | **155-6457** | 2 | MOUNT | |
| | 9 | 1 | **169-0591** | 1 | SWITCH AS (REAR FLOOD) | |
| | | 1 | **111-7899** | 1 | GASKET | |
| | 10 | 1 | **169-0593** | 1 | SWITCH AS (FRONT FLOOD) | |
| | | 1 | **111-7899** | 1 | GASKET | |
| | 11 | 1 | **169-0595** | 1 | SWITCH AS (BEACON) | |
| | | 1 | **111-7899** | 1 | GASKET | |
| | 12 | 1 | **176-0311** | 2 | LAMP GP-FLOOD | |
| | | | | | (EACH INCLUDES) | |
| | | 1 | **9W-0607** | 1 | LAMP (12 VOLT)(55 WATT) | |
| | | 1 | **102-8804** | 1 | KIT-RECEPTACLE (4 PIN) | |
| | | | | | (KIT SERVICES RECEPTACLE AS. AND WEDGE) | |
| | | 1 | **176-0346** | 1 | LENS (1) | |
| | 13 | 1 | **176-0312** | 2 | LAMP GP-FLOOD | |
| | | | | | (EACH INCLUDES) | |
| | | 1 | **186-3735** | 2 | PIN-CONNECTOR | |
| | | 1 | **9W-0607** | 1 | LAMP (12 VOLT)(55 WATT) | |
| | | 1 | **176-0346** | 1 | LENS (1) | |
| | 14 | 1 | **178-7539** | 2 | RECEPTACLE AS (POWER PORT) | |
| | 15 | 1 | **179-5435** | 2 | FLANGE | |
| | 16 | 1 | **187-8094** | 1 | ROOF | |
| | 17 | 1 | **200-0648** | 1 | HARNESS AS (EXTENSION) | |
| | | 1 | **102-8805** | 1 | KIT-RECEPTACLE (6 PIN) | |
| | | | | | (KIT SERVICES RECEPTACLE AS. AND WEDGE) | |
| | | 1 | **8L-8413** | 8 | STRAP-CABLE | |
| | | 1 | **8T-8737** | 3 | PLUG-SEAL | |
| | | 1 | **111-6795** | 2 | HOUSING-RELAY | |
| | | 1 | **111-6816** | 2 | LOCK | |
| | | 1 | **155-2270** | 1 | KIT-CONNECTING PLUG (2 PIN) | |
| | | | | | (KIT SERVICES PLUG AS. AND WEDGE) | |
| | | 1 | **155-2274** | 1 | KIT-CONNECTING PLUG (6 PIN) | |
| | | | | | (KIT SERVICES PLUG AS. AND WEDGE) | |
| | 18 | 1 | **202-5705** | 1 | HARNESS AS | |
| | | 1 | **155-2271** | 2 | KIT-CONNECTING PLUG (4 PIN) | |
| | | | | | (KIT SERVICES PLUG AS. AND WEDGE) | |
| | | 1 | **102-8805** | 1 | KIT-RECEPTACLE (6 PIN) | |
| | | | | | (KIT SERVICES RECEPTACLE AS. AND WEDGE) | |
| M | 19 | 1 | **138-8454** | 2 | SCREW-TRUSS HEAD | |
| | 20 | 1 | **156-0283** | 7 | WASHER-HARD (8.4X35X2.5MM THK) | |
| | 21 | 1 | **3E-6922** | 4 | SCREW-RECESS FLAT HEAD (NO. 6-19X12.7MM) | |
| | 22 | 1 | **4B-4863** | 2 | WASHER (4.7X11X1.2MM THK) | |
| M | 23 | 1 | **8T-4133** | 4 | NUT (M10X1.5 THD) | |
| M | 24 | 1 | **8T-5093** | 7 | BOLT-LOCKING (M8X1.25X25MM) | |
| | 25 | 1 | **141-0924** | 3 | SEAL (0.025M) | |
| | 26 | 1 | **141-0924** | 2 | SEAL (0.035M) | |

*185-8815* **LIGHTING GP-FLOOD** ***(contd. )*** **i01662538**

D-ORDER BY THE METER
M-METRIC PART

*185-8815* **LIGHTING GP-FLOOD** *(contd.)* **i01662538**

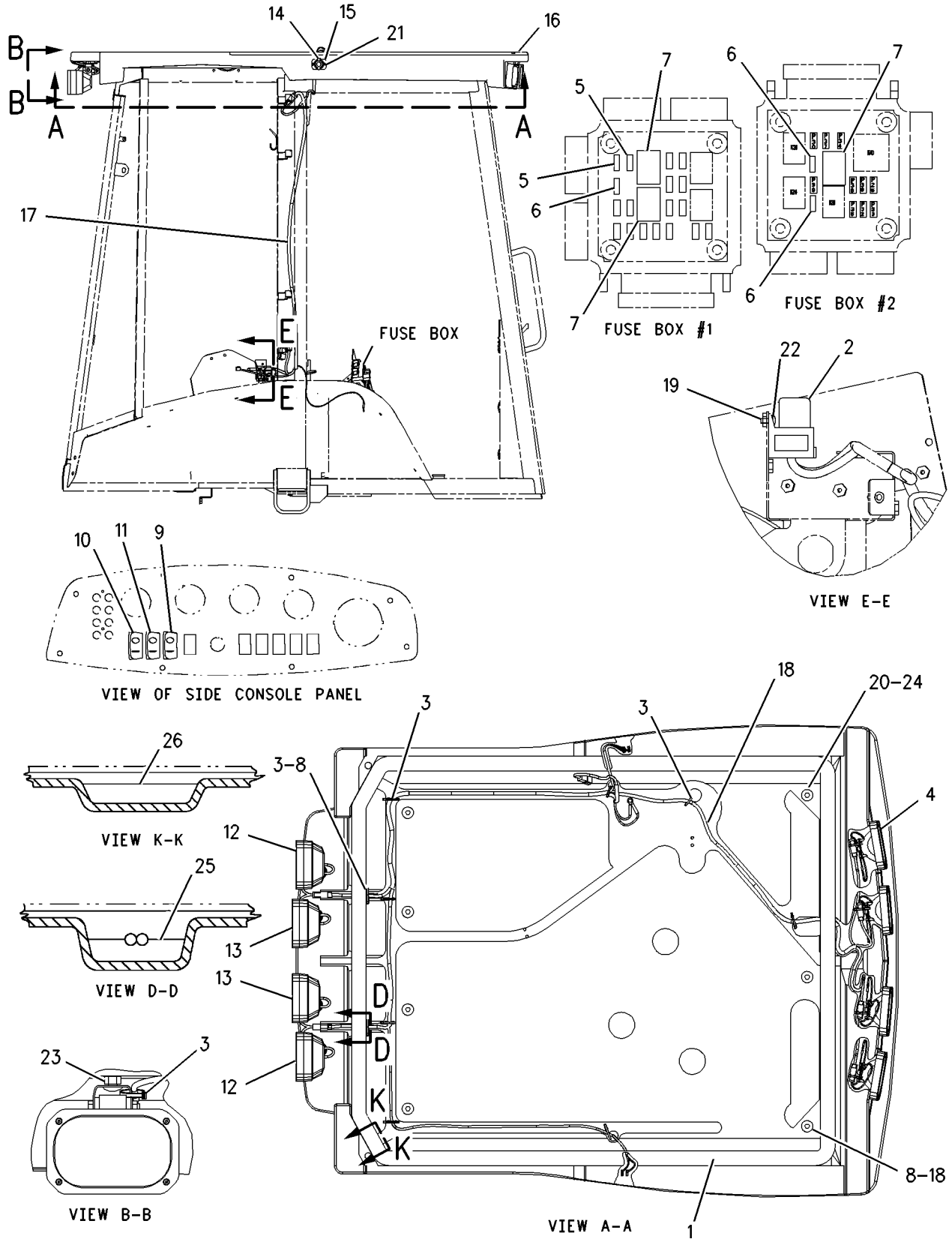


GRAPHIC #1 **<END>** g00858106

# ELECTRICAL AND STARTING SYSTEM

## *202-5707* LIGHTING GP-FLOOD

**S/N: BXC1-UP; DSX1-UP**

**AN ATTACHMENT**

**SMCS-1434** **i02000035**

| NOTE | REF NO | GRAPHIC REF | PART NUMBER | QTY | PART NAME 1 2 3 4 5 6 (PRODUCT LEVEL) | SEE PAGE |
|---|---|---|---|---|---|---|
| D | 1 | 1 | **141-0924** | | SEAL (5.8M) | |
| | 2 | 1 | **3E-9362** | 2 | RELAY AS (12 VOLT) (STANDARD/AUXILIARY FLOOD) | |
| | 3 | 1 | **3S-2093** | 15 | STRAP-CABLE | |
| | 4 | 1 | **9R-6247** | 2 | STRAP-CABLE | |
| | 5 | 1 | **105-8069** | 2 | LAMP GP-FLOOD | |
| | | | | | (EACH INCLUDES) | |
| | | 1 | **9W-0607** | 1 | LAMP (12 VOLT, 55 WATT) | |
| | | 1 | **142-5789** | 4 | SCREW | |
| | 6 | 1 | **113-8491** | 2 | FUSE (15 AMP) | |
| | 7 | 1 | **146-9439** | 2 | RELAY AS (12 VOLT) (LIGHTING) | |
| | 8 | 1 | **155-6457** | 2 | MOUNT | |
| | 9 | 1 | **156-0283** | 7 | WASHER-HARD (8.4X35X2.5MM THK) | |
| | 10 | 1 | **169-0590** | 1 | SWITCH AS (REAR FLOOD) | |
| | | 1 | **111-7899** | 1 | GASKET | |
| | 11 | 1 | **169-0592** | 1 | SWITCH AS (FRONT FLOOD) | |
| | | 1 | **111-7899** | 1 | GASKET | |
| | 12 | 1 | **169-0595** | 1 | SWITCH AS (WARNING BEACON) | |
| | | 1 | **111-7899** | 1 | GASKET | |
| | 13 | 1 | **173-3175** | 1 | CIRCUIT BREAKER AS (ROADING LAMP) | |
| | 14 | 1 | **176-0311** | 2 | LAMP GP-FLOOD | |
| | | | | | (EACH INCLUDES) | |
| | | 1 | **8T-8737** | 2 | PLUG-SEAL | |
| | | 1 | **9W-0607** | 1 | LAMP (12 VOLT, 55 WATT) (FLOOD) | |
| | | 1 | **176-0346** | 1 | LENS (CLEAR) (FLOODLAMP) | |
| | | 1 | **102-8804** | 1 | KIT-RECEPTACLE (4-PIN) | |
| | 15 | 1 | **178-7539** | 2 | RECEPTACLE AS (POWER PORT) | |
| | 16 | 1 | **179-5435** | 2 | FLANGE | |
| | 17 | 1 | **187-8093** | 1 | ROOF | |
| | 18 | 1 | **200-0648** | 1 | HARNESS AS-LIGHTING (RH) | |
| | | 1 | **102-8805** | 1 | KIT-RECEPTACLE (6-PIN) | |
| | | 1 | **155-2270** | 1 | KIT-CONNECTING PLUG (2-PIN) | |
| | | 1 | **155-2274** | 1 | KIT-CONNECTING PLUG (6-PIN) | |
| | 19 | 1 | **202-5705** | 1 | HARNESS AS-LIGHTING (ROOF) | |
| | | 1 | **102-8805** | 1 | KIT-RECEPTACLE (6-PIN) | |
| | | 1 | **155-2271** | 1 | KIT-CONNECTING PLUG (4-PIN) | |
| M | 20 | 1 | **138-8454** | 2 | SCREW-TRUSS HEAD (M4X0.7X10MM) | |
| | 21 | 1 | **3E-6922** | 4 | SCREW-RECESS FLAT HEAD (NO. 6-19X12.7MM) | |
| | 22 | 1 | **4B-4863** | 2 | WASHER (4.7X11X1.2MM THK) | |
| M | 23 | 1 | **8T-4133** | 2 | NUT (M10X1.5 THD) | |
| M | 24 | 1 | **8T-5093** | 7 | BOLT-LOCKING (M8X1.25X25MM) | |
| D | 25 | 1 | **141-0924** | 2 | SEAL (0.035M) | |
| D | 26 | 1 | **141-0924** | 3 | SEAL (0.025M) | |

D-ORDER BY THE METER
M-METRIC PART

*202-5707* **LIGHTING GP-FLOOD** *(contd.)* **i02000035**

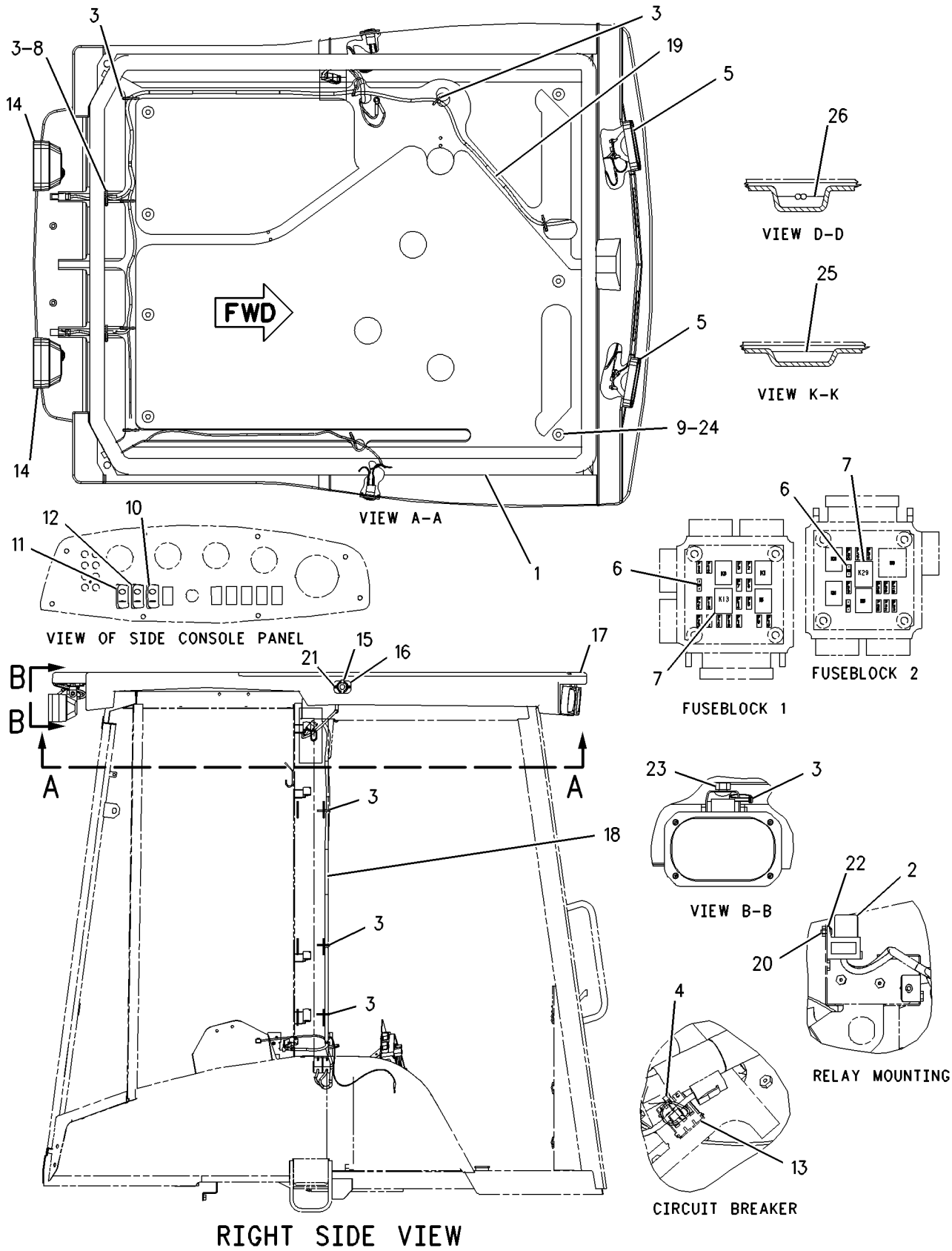


GRAPHIC #1 **<END>** g00885220

# ELECTRICAL AND STARTING SYSTEM

## *202-5708* LIGHTING GP-FLOOD

**S/N: BXC1-UP; DSX1-UP**

**AN ATTACHMENT**

**SMCS-1434** **i01936502**

| NOTE | REF NO | GRAPHIC REF | PART NUMBER | QTY | PART NAME 1 2 3 4 5 6 (PRODUCT LEVEL) | SEE PAGE |
|---|---|---|---|---|---|---|
| D | 1 | 1 | **141-0924** | | SEAL (5.8M) | |
| | 2 | 1 | **3E-9362** | 2 | RELAY AS (12 VOLT) (STANDARD/AUXILIARY FLOOD) | |
| | 3 | 1 | **3S-2093** | 17 | STRAP-CABLE | |
| | 4 | 1 | **9R-6247** | 2 | STRAP-CABLE | |
| | 5 | 1 | **105-8069** | 4 | LAMP GP-FLOOD (FRONT) | |
| | | | | | (EACH INCLUDES) | |
| | | 1 | **9W-0607** | 1 | LAMP (12 VOLT/55 WATT) | |
| | | 1 | **142-5789** | 4 | SCREW | |
| | 6 | 1 | **113-8490** | 2 | FUSE (10 AMP) | |
| | 7 | 1 | **113-8491** | 2 | FUSE (15 AMP) | |
| | 8 | 1 | **146-9439** | 3 | RELAY AS (12 VOLT) (LIGHTING) | |
| | 9 | 1 | **155-6457** | 2 | MOUNT | |
| | 10 | 1 | **156-0283** | 7 | WASHER-HARD (8.4X35X2.5MM THK) | |
| | 11 | 1 | **169-0591** | 1 | SWITCH AS (REAR FLOOD) | |
| | | 1 | **111-7899** | 1 | GASKET | |
| | 12 | 1 | **169-0593** | 1 | SWITCH AS (FRONT FLOOD) | |
| | | 1 | **111-7899** | 1 | GASKET | |
| | 13 | 1 | **169-0595** | 1 | SWITCH AS (BEACON) | |
| | | 1 | **111-7899** | 1 | GASKET | |
| | 14 | 1 | **173-3175** | 1 | CIRCUIT BREAKER AS (ROADING LAMPS) | |
| | 15 | 1 | **176-0311** | 2 | LAMP GP-FLOOD (REAR) | |
| | | | | | (EACH INCLUDES) | |
| | | 1 | **8T-8737** | 2 | PLUG-SEAL | |
| | | 1 | **9W-0607** | 1 | LAMP (12 VOLT/55 WATT) | |
| | | 1 | **102-8804** | 1 | KIT-RECEPTACLE (4 PIN) | |
| | | 1 | **176-0346** | 1 | LENS (CLEAR) | |
| | 16 | 1 | **176-0312** | 2 | LAMP GP-FLOOD (REAR) | |
| | | | | | (EACH INCLUDES) | |
| | | 1 | **9W-0607** | 1 | LAMP (12 VOLT/55 WATT) | |
| | | 1 | **176-0346** | 1 | LENS (CLEAR) | |
| | | 1 | **9X-3401** | 2 | PIN-CONNECTOR | |
| | 17 | 1 | **178-7539** | 2 | RECEPTACLE AS | |
| | 18 | 1 | **179-5435** | 2 | FLANGE | |
| | 19 | 1 | **187-8094** | 1 | ROOF | |
| | 20 | 1 | **200-0648** | 1 | HARNESS AS-LIGHTING (RH) | |
| | | 1 | **102-8805** | 1 | KIT-RECEPTACLE (6 PIN) | |
| | | 1 | **155-2270** | 1 | KIT-CONNECTING PLUG (2 PIN) | |
| | | 1 | **155-2274** | 1 | KIT-CONNECTING PLUG (6 PIN) | |
| | 21 | 1 | **202-5705** | 1 | HARNESS AS-LIGHTING (ROOF) | |
| | | 1 | **102-8805** | 1 | KIT-RECEPTACLE (6 PIN) | |
| | | 1 | **155-2271** | 1 | KIT-CONNECTING PLUG (4 PIN) | |
| M | 22 | 1 | **138-8454** | 2 | SCREW-TRUSS HEAD (M4X0.7X10MM) | |
| | 23 | 1 | **3E-6922** | 4 | SCREW-RECESS FLAT HEAD (NO. 6-19X12.7MM) | |
| | 24 | 1 | **4B-4863** | 2 | WASHER (4.7X11X1.2MM THK) | |
| M | 25 | 1 | **8T-4133** | 4 | NUT (M10X1.5 THD) | |
| M | 26 | 1 | **8T-5093** | 7 | BOLT-LOCKING (M8X1.25X25MM) | |
| D | 27 | 1 | **141-0924** | 3 | SEAL (0.025M) | |
| D | 28 | 1 | **141-0924** | 2 | SEAL (0.035M) | |

D-ORDER BY THE METER
M-METRIC PART

*202-5708* **LIGHTING GP-FLOOD** *(contd.)* **i01936502**

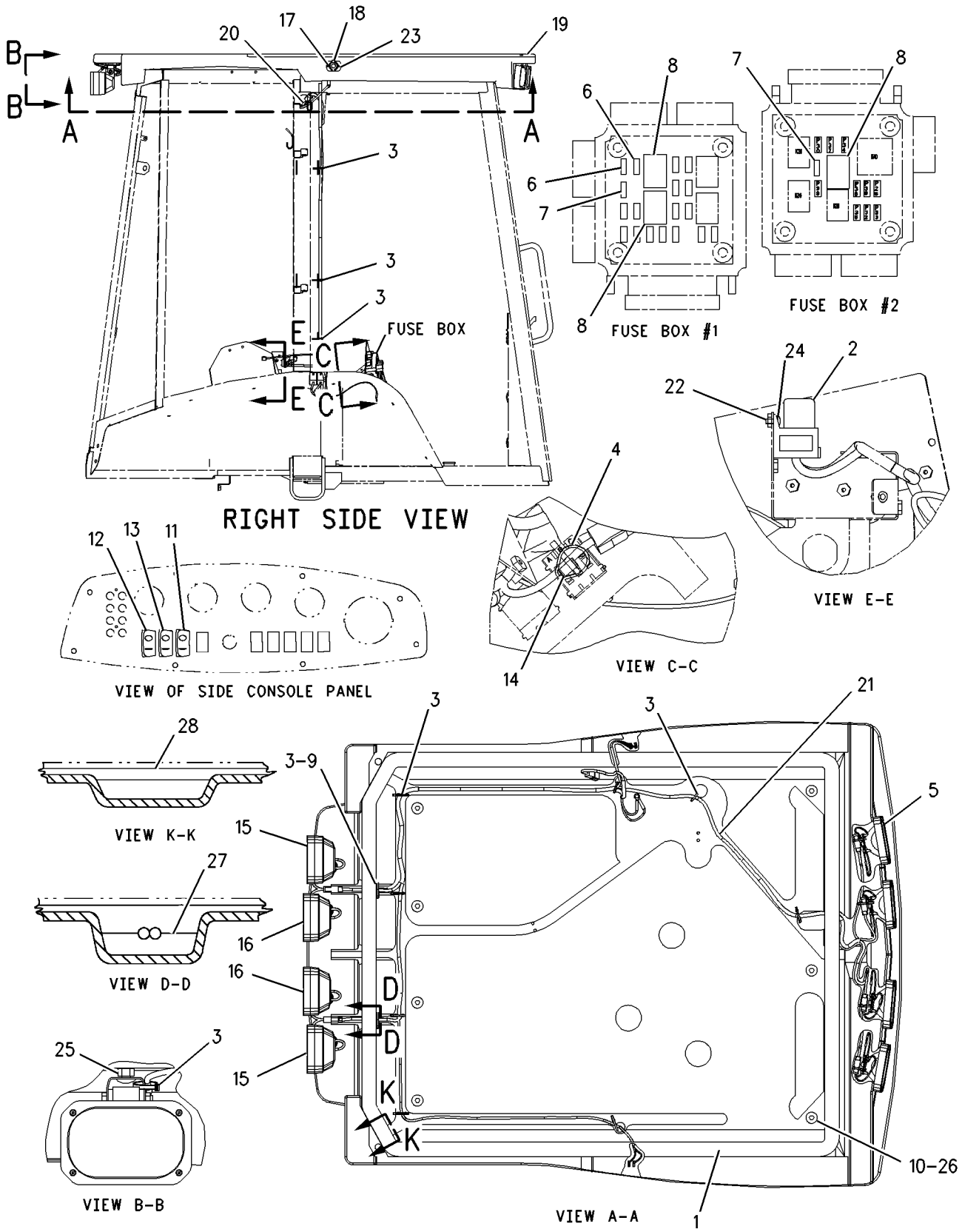


GRAPHIC #1 **<END>** g00885744

# ELECTRICAL AND STARTING SYSTEM

## *241-0095* LIGHTING GP-FLOOD

**S/N: BXC1-UP; DSX1-UP**

**AN ATTACHMENT**

**SMCS-1434** **i02010848**

| NOTE | REF NO | GRAPHIC REF | PART NUMBER | QTY | PART NAME 1 2 3 4 5 6 (PRODUCT LEVEL) | SEE PAGE |
|---|---|---|---|---|---|---|
| | 1 | 1 | **3E-9362** | 2 | RELAY AS (12 VOLT) | |
| | 2 | 1 | **9R-6247** | 2 | STRAP-CABLE | |
| | 3 | 1 | **105-8069** | 2 | LAMP GP-FLOOD | |
| | | 1 | **9W-0607** | 1 | LAMP (12-VOLT, 55-WATT) | |
| | | 1 | **142-5789** | 4 | SCREW | |
| | 4 | 1 | **113-8491** | 2 | FUSE (15-AMPERE) | |
| | 5 | 1 | **146-9439** | 2 | RELAY AS (12 VOLT) | |
| | 6 | 1 | **155-6457** | 2 | MOUNT | |
| | 7 | 1 | **169-0590** | 1 | SWITCH AS (REAR FLOOD) | |
| | | 1 | **111-7899** | 1 | GASKET | |
| | 8 | 1 | **169-0592** | 1 | SWITCH AS (FRONT FLOOD) | |
| | | 1 | **111-7899** | 1 | GASKET | |
| | 9 | 1 | **169-0595** | 1 | SWITCH AS (BEACON) | |
| | | 1 | **111-7899** | 1 | GASKET | |
| | 10 | 1 | **173-3175** | 1 | CIRCUIT BREAKER AS | |
| | 11 | 1 | **178-7539** | 2 | RECEPTACLE AS (POWER PORT) | |
| | 12 | 1 | **179-5435** | 2 | FLANGE | |
| | 13 | 1 | **187-8093** | 1 | ROOF | |
| | 14 | 1 | **200-0648** | 1 | HARNESS AS-LIGHTING | |
| | | 1 | **102-8805** | 1 | KIT-RECEPTACLE (6-PIN) | |
| | | 1 | **155-2270** | 1 | KIT-CONNECTING PLUG (2-PIN) | |
| | | 1 | **155-2274** | 1 | KIT-CONNECTING PLUG (6-PIN) | |
| Y | 15 | 1 | **234-4328** | 2 | LAMP GP-FLOOD | 118 |
| | 16 | 1 | **241-0093** | 1 | HARNESS AS-LIGHTING (ROOF) | |
| | | 1 | **102-8802** | 2 | KIT-RECEPTACLE (2-PIN) | |
| | | 1 | **102-8805** | 1 | KIT-RECEPTACLE (6-PIN) | |
| | | 1 | **155-2270** | 4 | KIT-CONNECTING PLUG (2-PIN) | |
| M | 17 | 1 | **138-8454** | 2 | SCREW-TRUSS HEAD (M4X0.7X10MM) | |
| | 18 | 1 | **156-0283** | 7 | WASHER-HARD (8.4X35X2.5MM THK) | |
| | 19 | 1 | **3E-6922** | 4 | SCREW-RECESS FLAT HEAD (NO. 6-19X12.7MM) | |
| | 20 | 1 | **3S-2093** | 15 | STRAP-CABLE | |
| | 21 | 1 | **4B-4863** | 2 | WASHER (4.7X11X1.2MM THK) | |
| M | 22 | 1 | **8T-5093** | 7 | BOLT-LOCKING (M8X1.25X25MM) | |
| D | 23 | 1 | **141-0924** | | SEAL (.6M) | |

D-ORDER BY THE METER
M-METRIC PART
Y-SEPARATE ILLUSTRATION

*241-0095* **LIGHTING GP-FLOOD** *(contd.)* **i02010848**

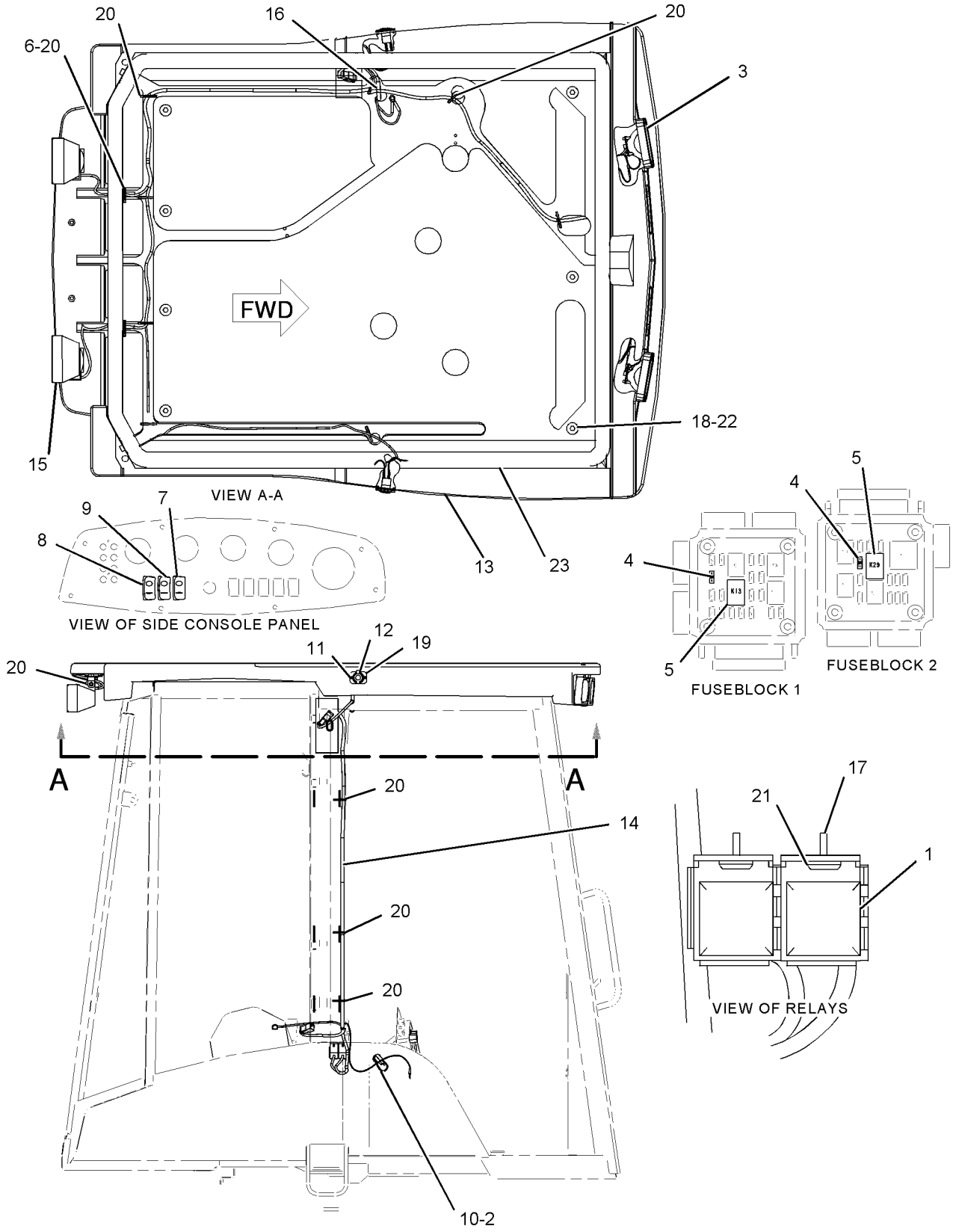


RIGHT SIDE VIEW

GRAPHIC #1 **<END>** g01039871

# ELECTRICAL AND STARTING SYSTEM

## *241-0096* LIGHTING GP-FLOOD

**S/N: BXC220-UP; DSX210-UP**

**AN ATTACHMENT**

**SMCS-1434** **i02011547**

| NOTE | REF NO | GRAPHIC REF | PART NUMBER | QTY | PART NAME 1 2 3 4 5 6 (PRODUCT LEVEL) | SEE PAGE |
|---|---|---|---|---|---|---|
| | 1 | 1 | **3E-9362** | 2 | RELAY AS (12 VOLT) | |
| | 2 | 1 | **9R-6247** | 2 | STRAP-CABLE | |
| | 3 | 1 | **105-8069** | 4 | LAMP GP-FLOOD | |
| | | | | | (EACH INCLUDES) | |
| | | 1 | **9W-0607** | 1 | LAMP (12-VOLT, 55-WATT) | |
| | | 1 | **142-5789** | 1 | SCREW | |
| | 4 | 1 | **113-8490** | 2 | FUSE (10-AMPERE) | |
| | 5 | 1 | **113-8491** | 2 | FUSE (15-AMPERE) | |
| | 6 | 1 | **146-9439** | 3 | RELAY AS (12 VOLT) | |
| | 7 | 1 | **155-6457** | 2 | MOUNT | |
| | 8 | 1 | **169-0591** | 1 | SWITCH AS-ROCKER (REAR FLOOD) | |
| | | 1 | **111-7899** | 1 | GASKET | |
| | 9 | 1 | **169-0593** | 1 | SWITCH AS-ROCKER (FRONT FLOOD) | |
| | | 1 | **111-7899** | 1 | GASKET | |
| | 10 | 1 | **169-0595** | 1 | SWITCH AS (BEACON) | |
| | | 1 | **111-7899** | 1 | GASKET | |
| | 11 | 1 | **173-3175** | 1 | CIRCUIT BREAKER AS (20 AMP) | |
| | 12 | 1 | **178-7539** | 2 | RECEPTACLE AS (POWER PORT) | |
| | 13 | 1 | **179-5435** | 2 | FLANGE | |
| | 14 | 1 | **187-8094** | 1 | ROOF | |
| | 15 | 1 | **200-0648** | 1 | HARNESS AS-LIGHTING | |
| | | 1 | **102-8805** | 1 | KIT-RECEPTACLE (6-PIN) | |
| | | 1 | **155-2270** | 1 | KIT-CONNECTING PLUG (2-PIN) | |
| | | 1 | **155-2274** | 1 | KIT-CONNECTING PLUG (6-PIN) | |
| Y | 16 | 1 | **234-4328** | 2 | LAMP GP-FLOOD | 118 |
| | 17 | 1 | **241-0093** | 1 | HARNESS AS-LIGHTING (ROOF) | |
| | | 1 | **102-8802** | 2 | KIT-RECEPTACLE (2-PIN) | |
| | | 1 | **102-8805** | 1 | KIT-RECEPTACLE (6-PIN) | |
| | | 1 | **155-2270** | 4 | KIT-CONNECTING PLUG (2-PIN) | |
| M | 18 | 1 | **138-8454** | 2 | SCREW-TRUSS HEAD (M4X0.7X10MM) | |
| | 19 | 1 | **156-0283** | 7 | WASHER-HARD (8.4X35X2.5MM THK) | |
| Y | 20 | 1 | **234-4329** | 2 | LAMP GP-FLOOD | 119 |
| | 21 | 1 | **3E-6922** | 4 | SCREW-RECESS FLAT HEAD (NO. 6-19X12.7MM) | |
| | 22 | 1 | **3S-2093** | 17 | STRAP-CABLE | |
| | 23 | 1 | **4B-4863** | 2 | WASHER (4.7X11X1.2MM THK) | |
| M | 24 | 1 | **8T-5093** | 7 | BOLT-LOCKING (M8X1.25X25MM) | |
| D | 25 | 1 | **141-0924** | | SEAL (.6M) | |

D-ORDER BY THE METER
M-METRIC PART
Y-SEPARATE ILLUSTRATION

*241-0096* **LIGHTING GP-FLOOD** *(contd.)* **i02011547**

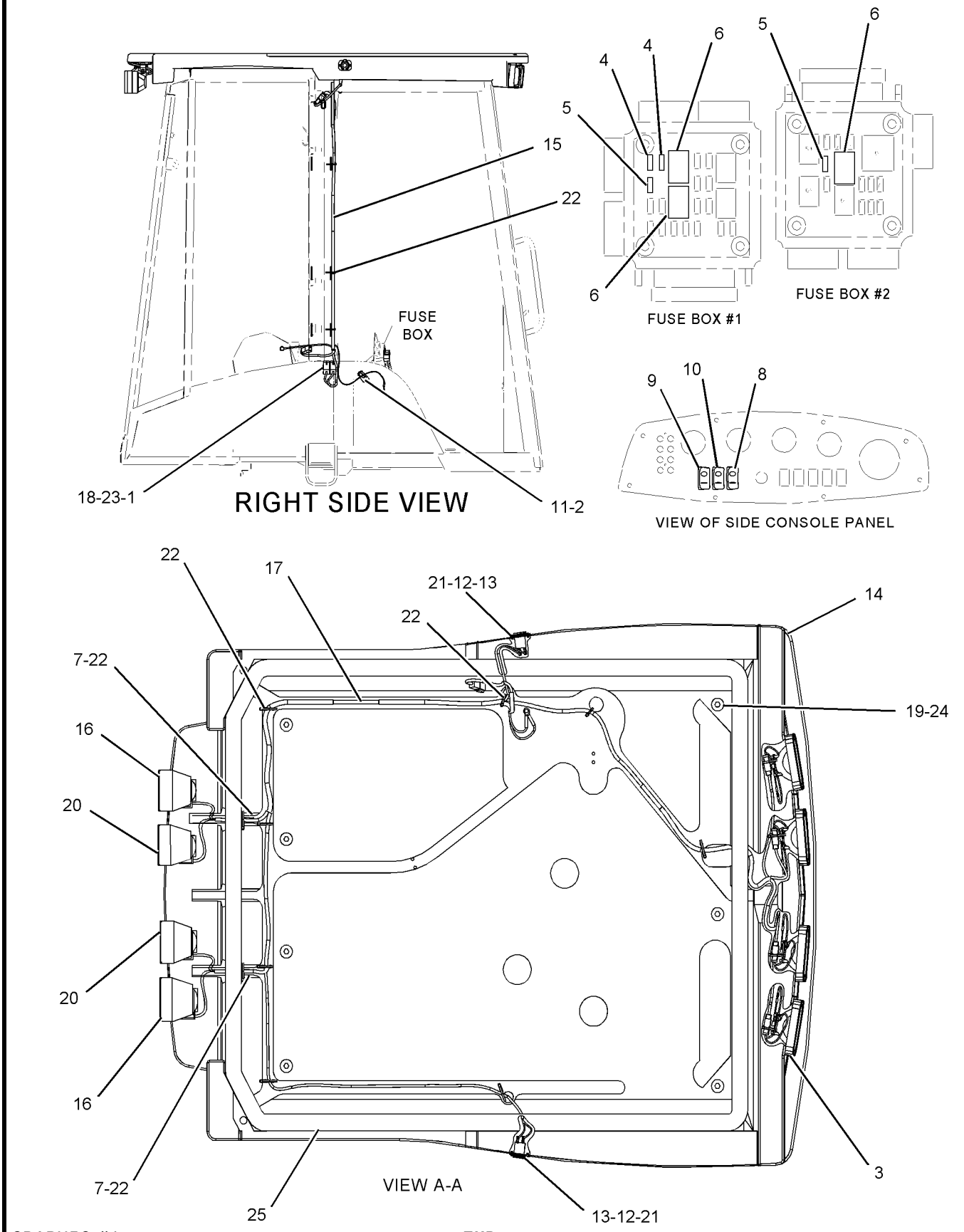


GRAPHIC #1 **<END>** g01040140

# *185-8811* LIGHTING GP-ROADING—FOG LIGHT

**S/N: BXC1-UP; DSX1-UP**

**AN ATTACHMENT**

**SMCS-1429** **i01862869**

| NOTE | REF NO | GRAPHIC REF | PART NUMBER | QTY | PART NAME 1 2 3 4 5 6 (PRODUCT LEVEL) | SEE PAGE |
|---|---|---|---|---|---|---|
| | 1 | 1 | **8Q-4396** | 1 | PLATE AS | |
| | 2 | 1 | **229-9862** | 1 | PLATE AS | |
| | 3 | 1 | **169-0611** | 1 | SWITCH AS (FOG LAMPS) | |
| | | 1 | **111-7899** | 1 | GASKET | |
| | | 1 | **142-9117** | 1 | CONNECTOR | |
| | 4 | 1 | **189-6561** | 1 | HARNESS AS-PLATFORM | |
| | | 1 | **102-8802** | 1 | KIT-RECEPTACLE (2 PIN) | |
| | | 1 | **102-8803** | 1 | KIT-RECEPTACLE (3 PIN) | |
| | 5 | 1 | **189-6562** | 1 | HARNESS AS-OPERATOR CONTROLS | |
| | | 1 | **155-2260** | 1 | KIT-CONNECTING PLUG (3 PIN) | |
| | 6 | 1 | **189-6563** | 1 | HARNESS AS-REAR LIGHTING | |
| | | 1 | **155-2270** | 1 | KIT-CONNECTING PLUG (2 PIN) | |
| CY | 7 | 1 | **220-8698** | 1 | LAMP GP-FLOOD (BASIC) | 117 |
| | 8 | 1 | **3S-2093** | 16 | STRAP-CABLE | |
| | 9 | 1 | **4P-7581** | 2 | CLIP | |
| M | 10 | 1 | **8T-4138** | 2 | BOLT (M6X1X20MM) | |
| | 11 | 1 | **8T-4224** | 2 | WASHER-HARD (8.8X16X2MM THK) | |

C-CHANGE FROM PREVIOUS TYPE
M-METRIC PART
Y-SEPARATE ILLUSTRATION

*185-8811* **LIGHTING GP-ROADING** *(contd.)* **i01862869**

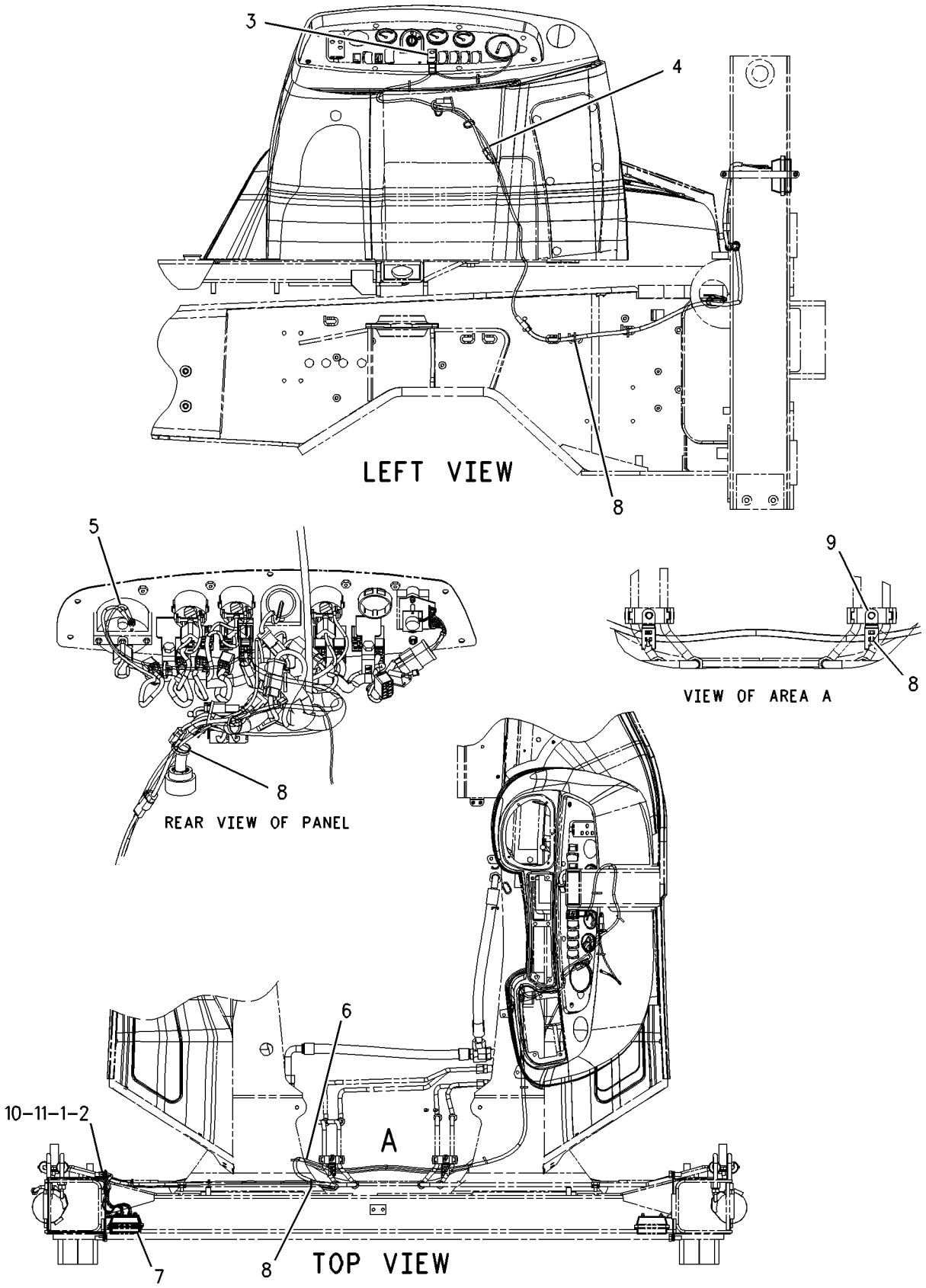


GRAPHIC #1 **<END>** g00935951

## *186-0314* LIGHTING GP-ROADING—LH—DIP BEAM

**S/N: BXC1-UP; DSX1-UP**

**AN ATTACHMENT**

**SMCS-1429** **i01543175**

| NOTE | REF NO | GRAPHIC REF | PART NUMBER | QTY | PART NAME 1 2 3 4 5 6 (PRODUCT LEVEL) | SEE PAGE |
|---|---|---|---|---|---|---|
| Y | 1 | 1 | **3E-7585** | 2 | LAMP GP-HEAD & SIGNAL | 122 |
| | 2 | 1,2 | **3S-2093** | 8 | STRAP-CABLE | |
| | 3 | 1 | **8T-8737** | 2 | PLUG-SEAL | |
| | 4 | 2 | **9R-1499** | 2 | REFLECTOR | |
| Y | 5 | 2 | *9R-2385* | 2 | LAMP GP-STOP & TAIL | 129 |
| | 6 | 1 | **9R-6247** | 2 | STRAP-CABLE | |
| | 7 | 1 | **155-2263** | 2 | WEDGE-PLUG LOCK (6 PIN) | |
| | 8 | 1 | **164-1096** | 1 | BRACKET-LH | |
| | 9 | 1 | **164-1097** | 1 | BRACKET-RH | |
| | 10 | 1 | **169-0594** | 1 | SWITCH AS (ROADING) | |
| | | 1 | **111-7899** | 1 | GASKET | |
| | 11 | 1 | **173-3175** | 1 | CIRCUIT BREAKER AS | |
| | 12 | 1 | **155-2274** | 2 | KIT-CONNECTING PLUG (6 PIN) | |
| | | | | | (KIT SERVICES PLUG AS AND WEDGE) | |
| | 13 | 1 | **8T-4121** | 4 | WASHER-HARD (11X21X2.5MM THK) | |
| M | 14 | 1 | **8T-4137** | 4 | BOLT (M10X1.5X20MM) | |

M-METRIC PART
Y-SEPARATE ILLUSTRATION

*186-0314* **LIGHTING GP-ROADING** *(contd.)* **i01543175**

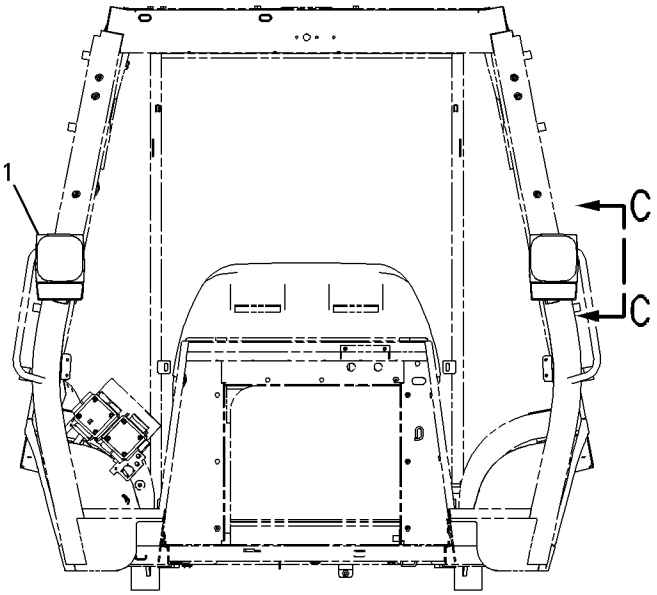


FRONT VIEW

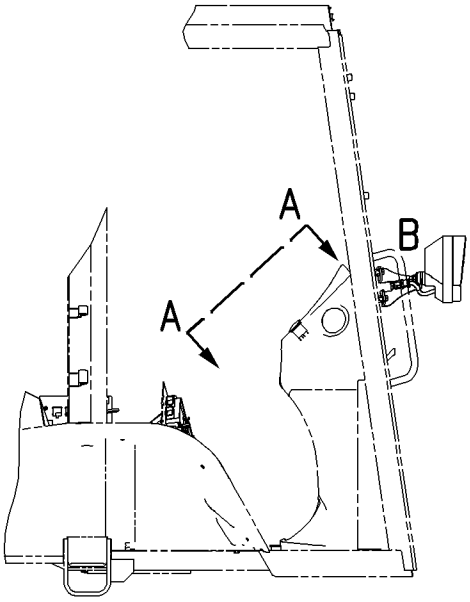


RIGHT SIDE VIEW

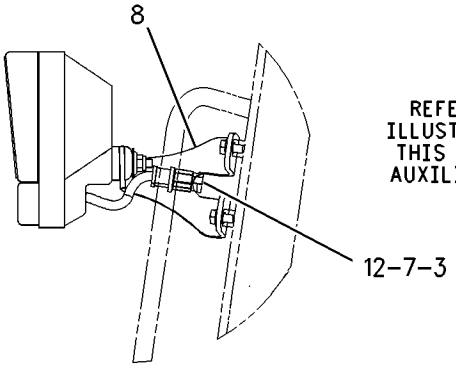


SECTION C-C

REFER TO ALL ILLUSTRATIONS IN THIS GROUP FOR AUXILIARY VIEWS

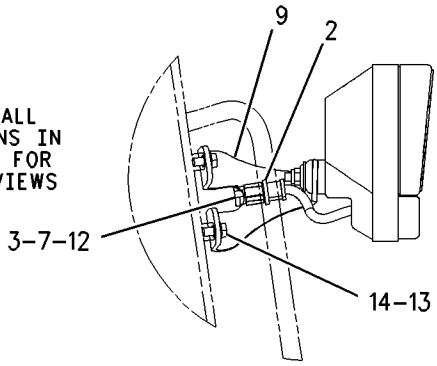


VIEW OF AREA B

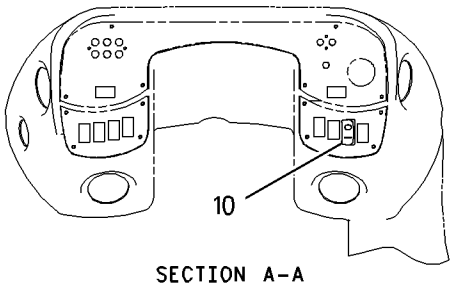


SECTION A-A

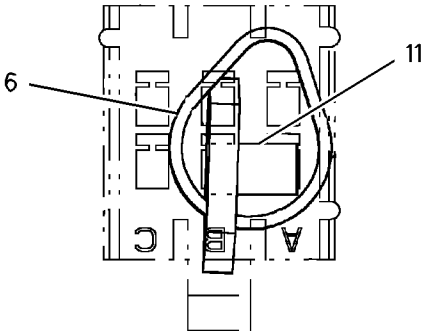


BREAKER POSITION VIEW

GRAPHIC #1 g00801721

*186-0314* **LIGHTING GP-ROADING** *(contd.)* **i01543175**

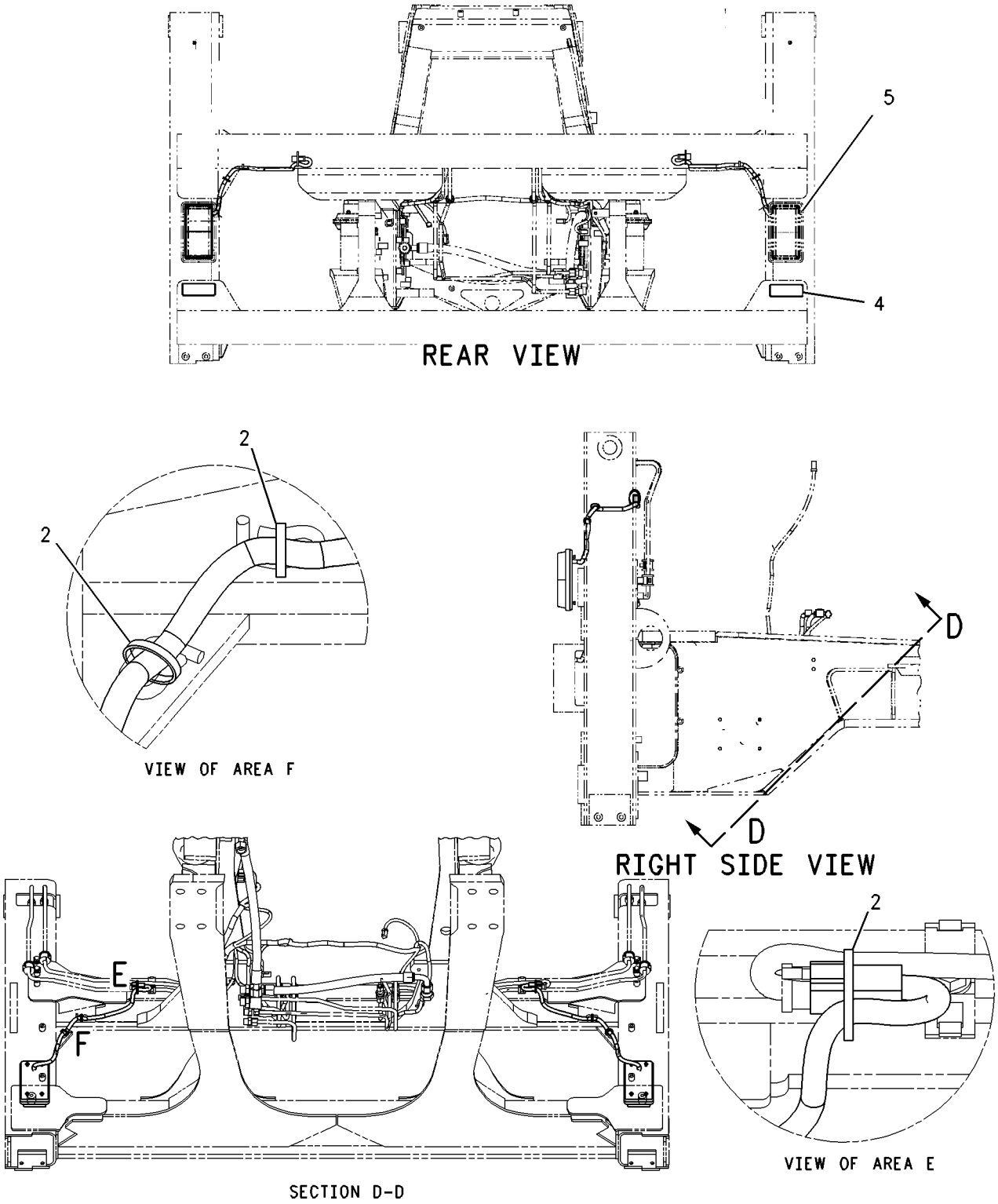


GRAPHIC #2 **<END>** g00804661

# ELECTRICAL AND STARTING SYSTEM

## *186-0315* LIGHTING GP-ROADING—RH—DIP BEAM

**S/N: BXC1-UP; DSX1-UP**

**AN ATTACHMENT**

**SMCS-1429** **i01543226**

| NOTE | REF NO | GRAPHIC REF | PART NUMBER | QTY | PART NAME 1 2 3 4 5 6 (PRODUCT LEVEL) | SEE PAGE |
|---|---|---|---|---|---|---|
| Y | 1 | 1 | **3E-7584** | 2 | LAMP GP-HEAD & SIGNAL | 120 |
| | 2 | 2 | **3S-2093** | 8 | STRAP-CABLE | |
| | 3 | 1 | **8T-8737** | 2 | PLUG-SEAL | |
| | 4 | 2 | **9R-1499** | 2 | REFLECTOR | |
| Y | 5 | 2 | *9R-2385* | 2 | LAMP GP-STOP & TAIL | 129 |
| | 6 | 1 | **9R-6247** | 2 | STRAP-CABLE | |
| | 7 | 1 | **155-2263** | 2 | WEDGE-PLUG LOCK (6 PIN) | |
| | 8 | 1 | **164-1096** | 1 | BRACKET-LH | |
| | 9 | 1 | **164-1097** | 1 | BRACKET-RH | |
| | 10 | 1 | **169-0594** | 1 | SWITCH AS (ROADING) | |
| | | 1 | **111-7899** | 1 | GASKET | |
| | 11 | 1 | **173-3175** | 1 | CIRCUIT BREAKER AS | |
| | 12 | 1 | **155-2274** | 2 | KIT-CONNECTING PLUG (6 PIN) | |
| | | | | | (KIT SERVICES PLUG AS AND WEDGE) | |
| | 13 | 1 | **8T-4121** | 4 | WASHER-HARD (11X21X2.5MM THK) | |
| M | 14 | 1 | **8T-4137** | 4 | BOLT (M10X1.5X20MM) | |

M-METRIC PART
Y-SEPARATE ILLUSTRATION

*186-0315* **LIGHTING GP-ROADING** *(contd.)* **i01543226**

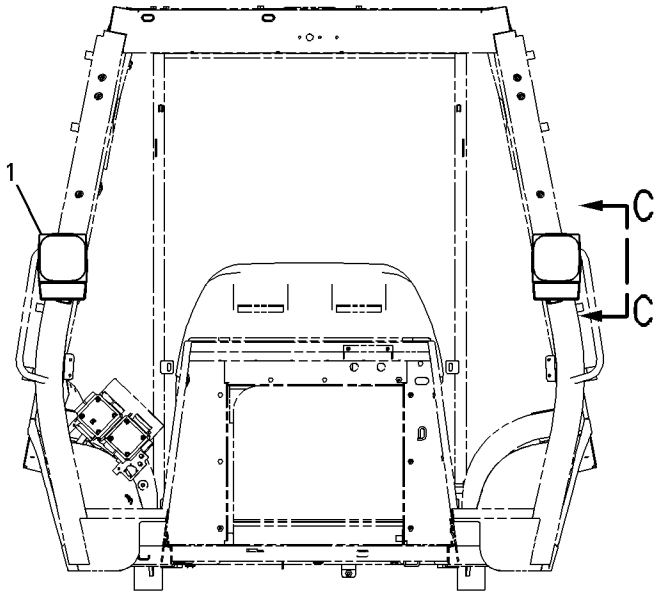


FRONT VIEW

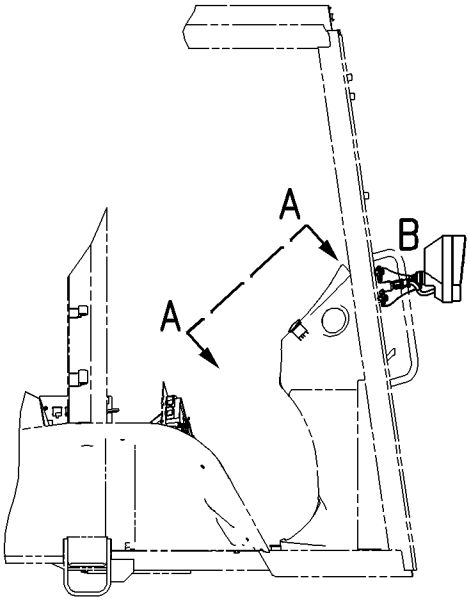


RIGHT SIDE VIEW

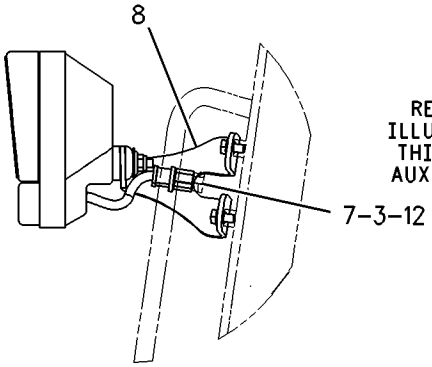


SECTION C-C

REFER TO ALL ILLUSTRATIONS IN THIS GROUP FOR AUXILIARY VIEWS

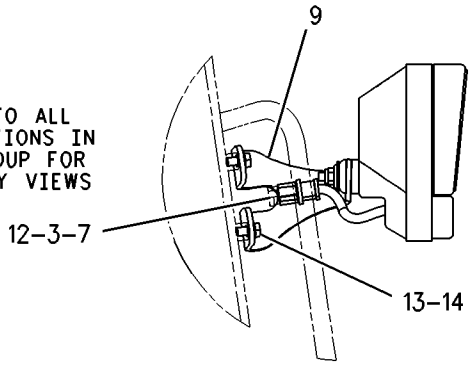


VIEW OF AREA B

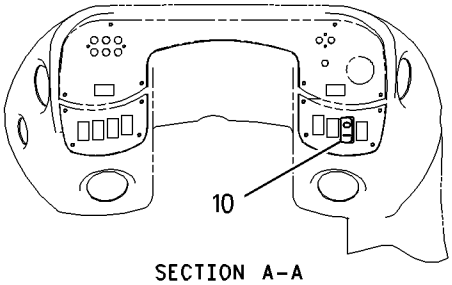


SECTION A-A

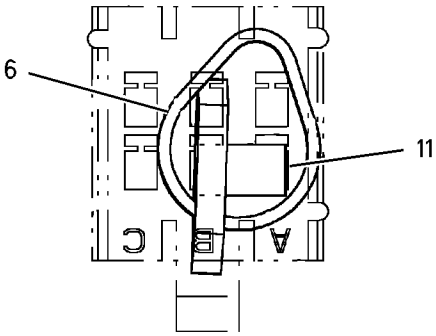


BREAKER POSITION VIEW

GRAPHIC #1 g00801749

*186-0315* **LIGHTING GP-ROADING** *(contd.)* **i01543226**

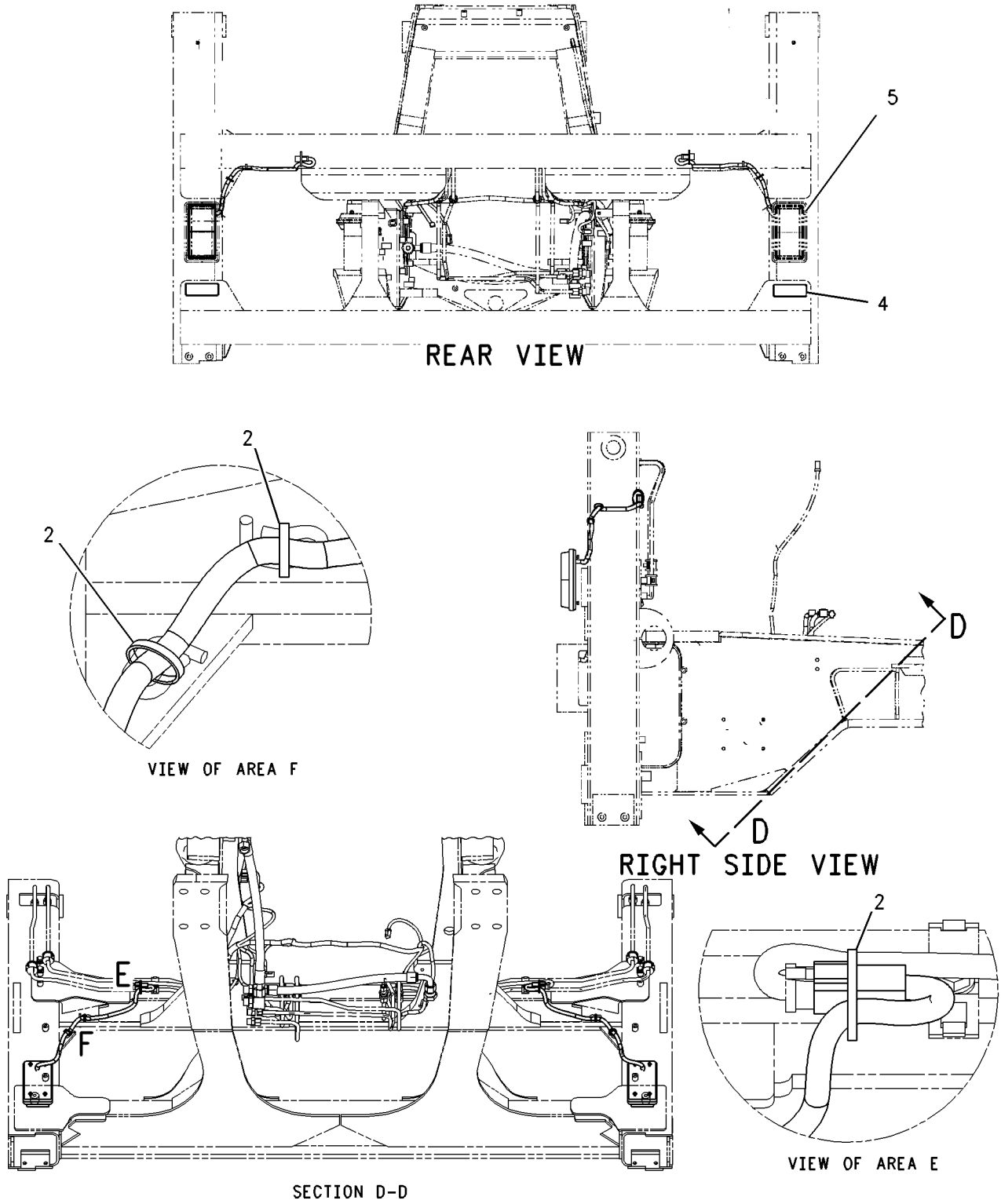


GRAPHIC #2 **<END>** g00804788

## *186-0316* LIGHTING GP-ROADING—SIDE REPEATER

**S/N: BXC1-UP; DSX1-UP**

**AN ATTACHMENT**

**SMCS-1429** **i01543315**

| NOTE | REF NO | GRAPHIC REF | PART NUMBER | QTY | PART NAME 1 2 3 4 5 6 (PRODUCT LEVEL) | SEE PAGE |
|---|---|---|---|---|---|---|
| Y | 1 | 1 | **3E-9382** | 1 | LAMP GP-HEAD & SIGNAL | 124 |
| | 2 | 1,2 | **3S-2093** | 8 | STRAP-CABLE | |
| | 3 | 1 | **8T-8737** | 2 | PLUG-SEAL | |
| | 4 | 2 | **9R-1499** | 2 | REFLECTOR | |
| Y | 5 | 2 | *9R-2385* | 2 | LAMP GP-STOP & TAIL | 129 |
| | 6 | 1 | **9R-6247** | 2 | STRAP-CABLE | |
| Y | 7 | 1 | **104-5255** | 1 | LAMP GP-HEAD & SIGNAL | 126 |
| | 8 | 1 | **155-2263** | 2 | WEDGE-PLUG LOCK (6 PIN) | |
| | 9 | 1 | **164-1096** | 1 | BRACKET-LH | |
| | 10 | 1 | **164-1097** | 1 | BRACKET-RH | |
| | 11 | 1 | **169-0594** | 1 | SWITCH AS (ROADING) | |
| | | 1 | **111-7899** | 1 | GASKET | |
| | 12 | 1 | **173-3175** | 1 | CIRCUIT BREAKER AS | |
| | 13 | 1 | **155-2274** | 2 | KIT-CONNECTING PLUG (6 PIN) | |
| | | | | | (KIT SERVICES PLUG AS AND WEDGE) | |
| | 14 | 1 | **8T-4121** | 4 | WASHER-HARD (11X21X2.5MM THK) | |
| M | 15 | 1 | **8T-4137** | 4 | BOLT (M10X1.5X20MM) | |

M-METRIC PART
Y-SEPARATE ILLUSTRATION

*186-0316* **LIGHTING GP-ROADING** *(contd.)* **i01543315**

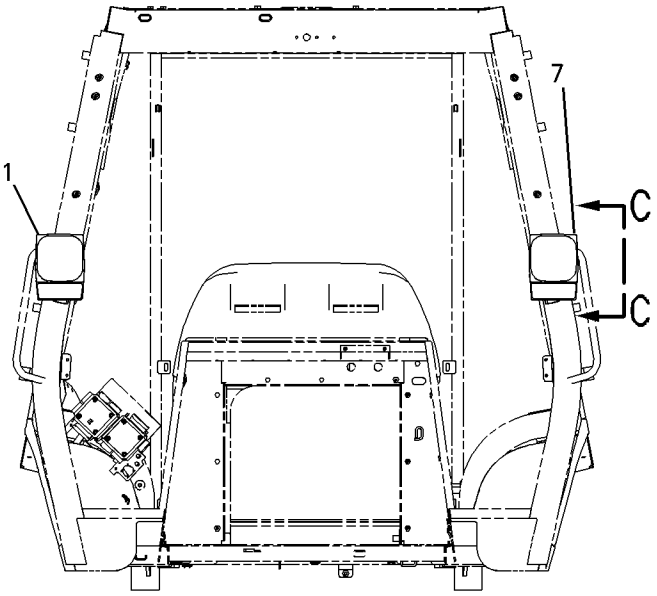


FRONT VIEW

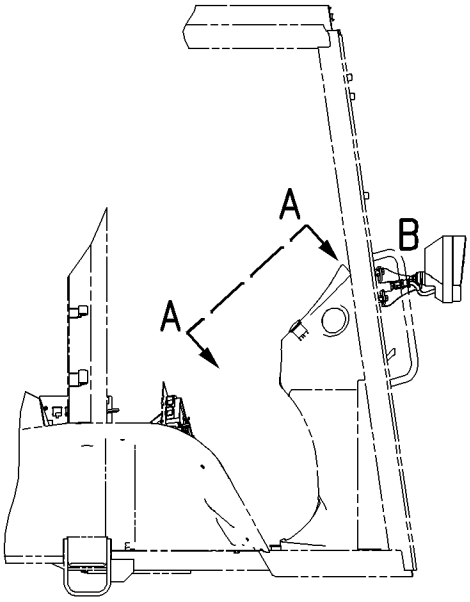


RIGHT SIDE VIEW

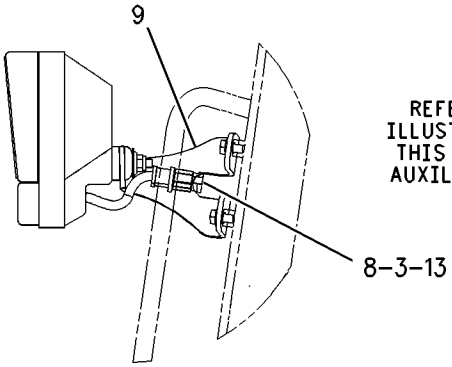


SECTION C-C

REFER TO ALL ILLUSTRATIONS IN THIS GROUP FOR AUXILIARY VIEWS

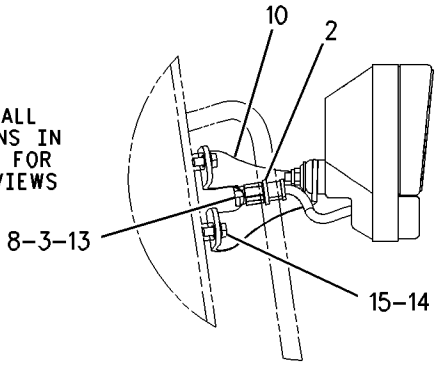


VIEW OF AREA B

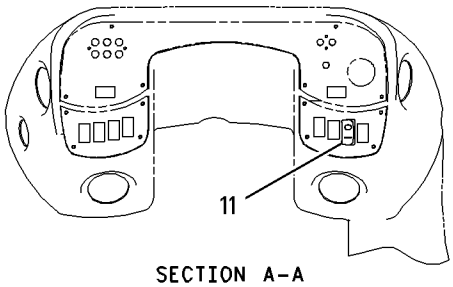


SECTION A-A

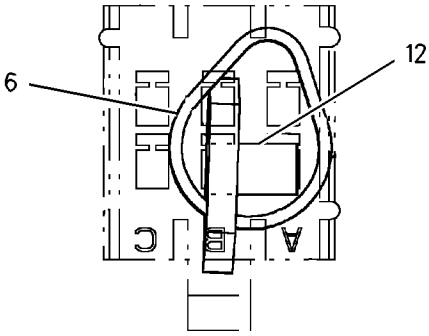


BREAKER POSITION VIEW

GRAPHIC #1 g00801784

*186-0316* **LIGHTING GP-ROADING** *(contd.)* **i01543315**

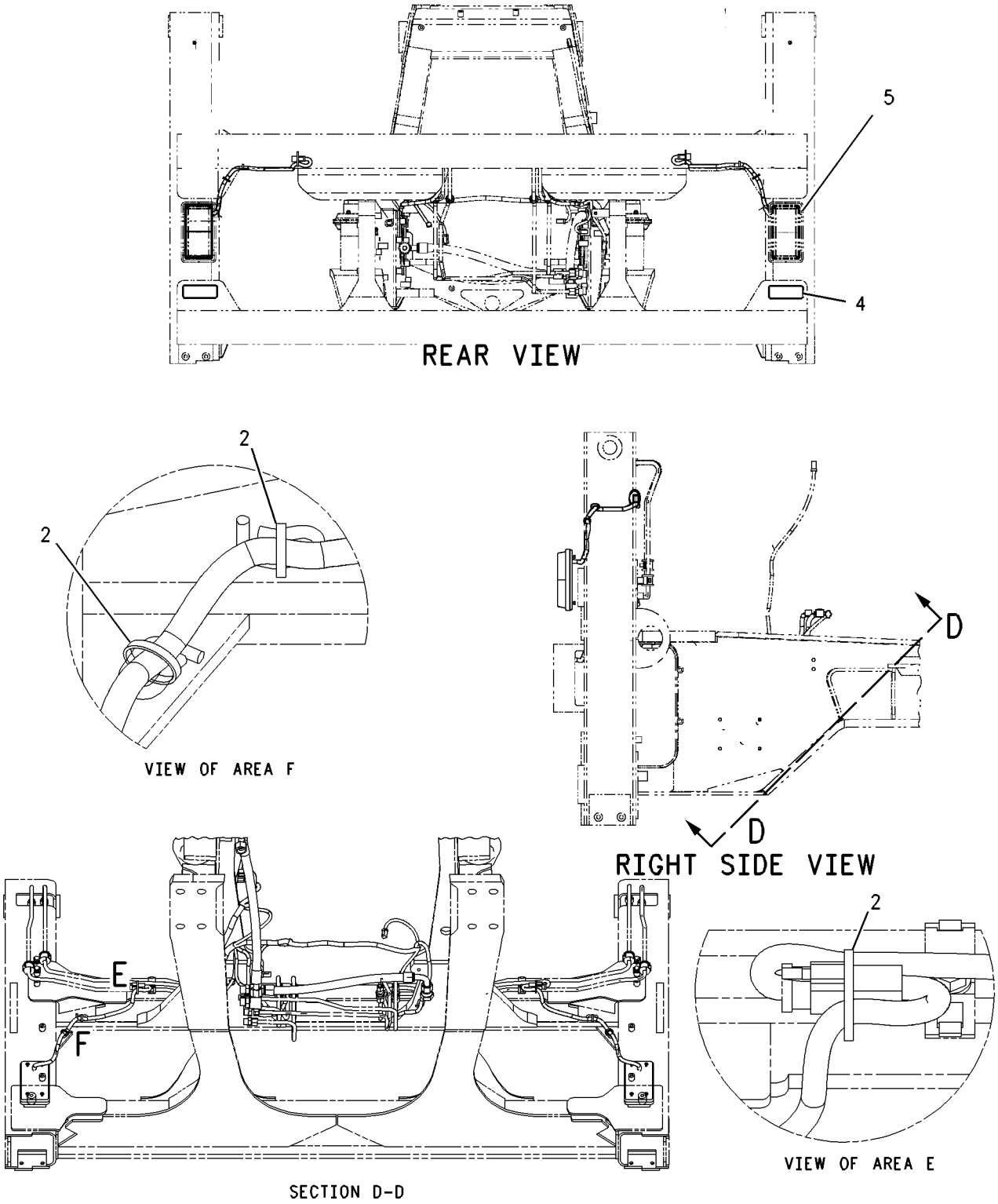


GRAPHIC #2 **<END>** g00803893

## *191-6550* LIGHTING GP-ROADING—LH DIP BEAM—SIDE SHIFT — CANOPY

**S/N: BXC1-UP; DSX1-UP**

**AN ATTACHMENT**

**SMCS-1429** **i02000041**

| NOTE | REF NO | GRAPHIC REF | PART NUMBER | QTY | PART NAME 1 2 3 4 5 6 (PRODUCT LEVEL) | SEE PAGE |
|---|---|---|---|---|---|---|
| Y | 1 | 1 | **3E-7585** | 2 | LAMP GP-HEAD & SIGNAL | 122 |
| | 2 | 1 | **8T-8737** | 2 | PLUG-SEAL | |
| | 3 | 2 | **9R-1499** | 2 | REFLECTOR | |
| Y | 4 | 2 | *9R-2385* | 2 | LAMP GP-STOP & TAIL | 129 |
| | 5 | 2 | **9R-6247** | 2 | STRAP-CABLE | |
| | 6 | 1 | **137-6215** | 1 | BRACKET | |
| | 7 | 1 | **137-6216** | 1 | BRACKET | |
| | 8 | 1 | **155-2263** | 2 | WEDGE-PLUG LOCK (6 PIN) | |
| | 9 | 1 | **169-0594** | 1 | SWITCH AS (ROADING) | |
| | | 1 | **111-7899** | 1 | GASKET | |
| | 10 | 2 | **173-3175** | 1 | CIRCUIT BREAKER AS | |
| | 11 | 1 | **155-2274** | 2 | KIT-CONNECTING PLUG (6-PIN) | |
| | | | | | (KIT SERVICES PLUG AS AND WEDGE) | |
| | 12 | 1 | **213-8479** | 1 | SWITCH AS-MULTIFUNCTION (LIGHTS, TURN SIGNALS & WIPER) | |
| | 13 | 1,2 | **3S-2093** | 8 | STRAP-CABLE | |
| M | 14 | 1 | **8T-0352** | 2 | BOLT (M5X0.8X45MM) | |
| | 15 | 1 | **8T-4121** | 4 | WASHER-HARD (11X21X2.5MM THK) | |
| M | 16 | 1 | **8T-4137** | 4 | BOLT (M10X1.5X20MM) | |

M-METRIC PART
Y-SEPARATE ILLUSTRATION

*191-6550* **LIGHTING GP-ROADING** *(contd.)* **i02000041**

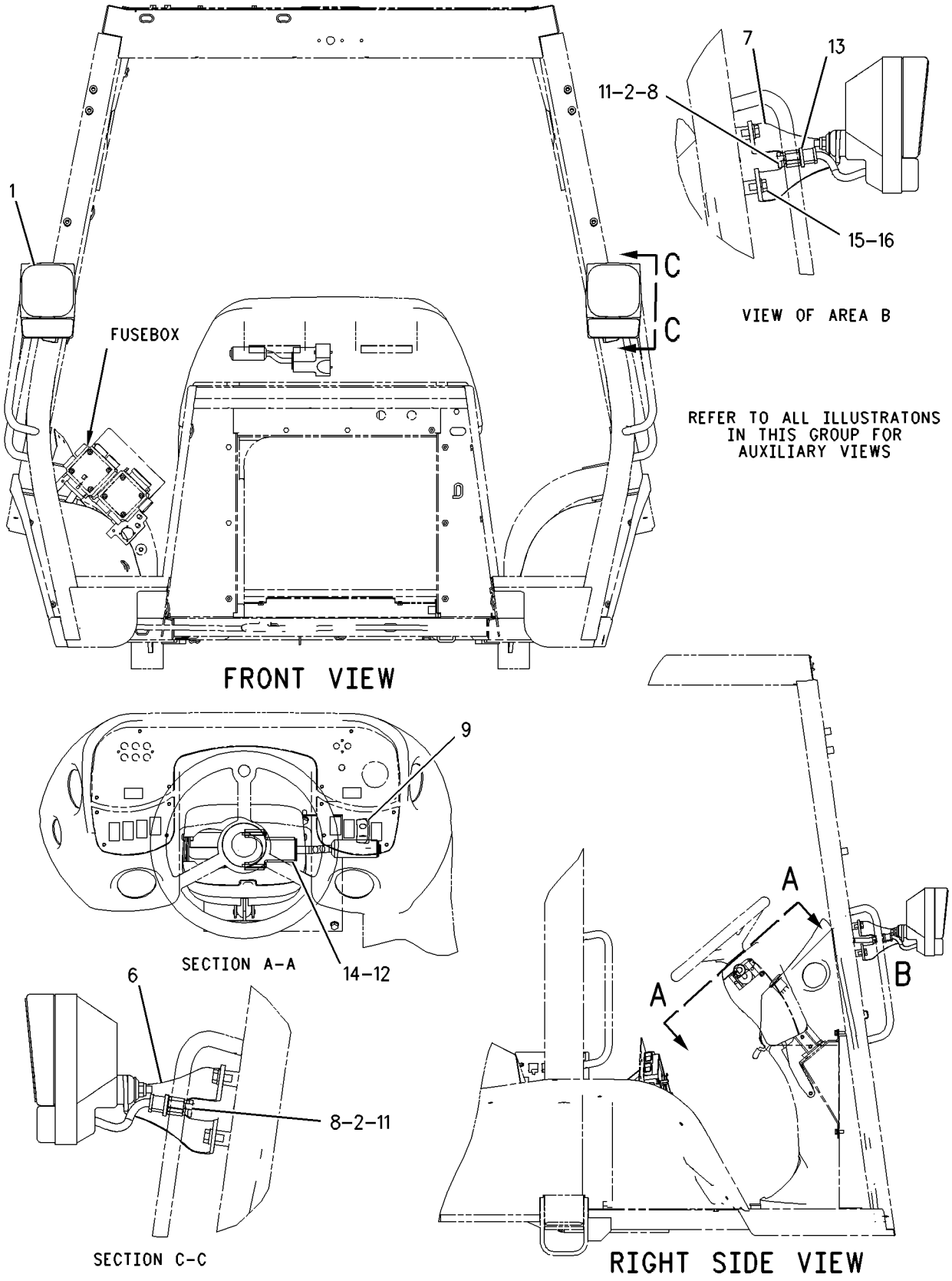


GRAPHIC #1 g00873225

*191-6550* **LIGHTING GP-ROADING** *(contd.)* **i02000041**

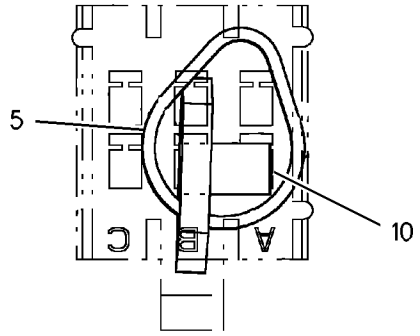


BREAKER POSITION VIEW

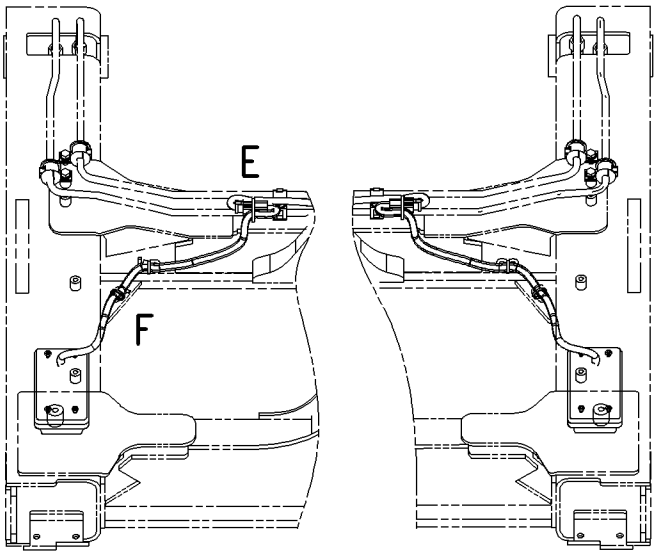


SECTION D-D

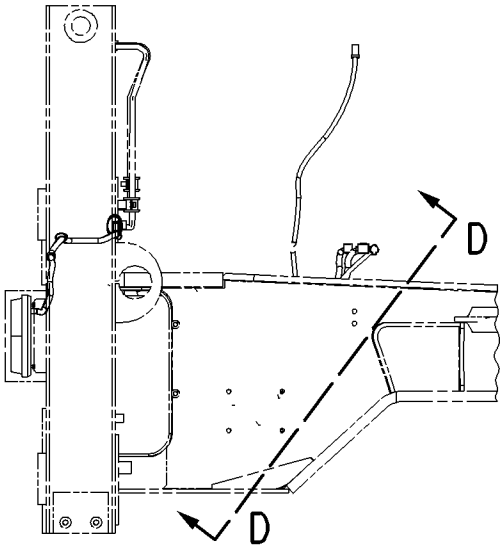


RIGHT SIDE VIEW

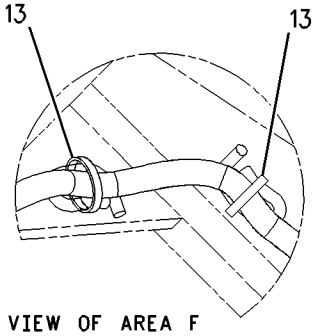


VIEW OF AREA F

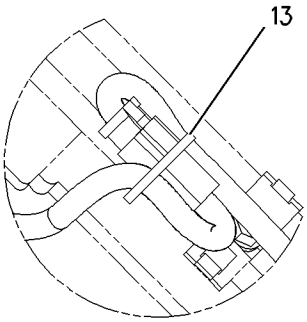


VIEW OF AREA E

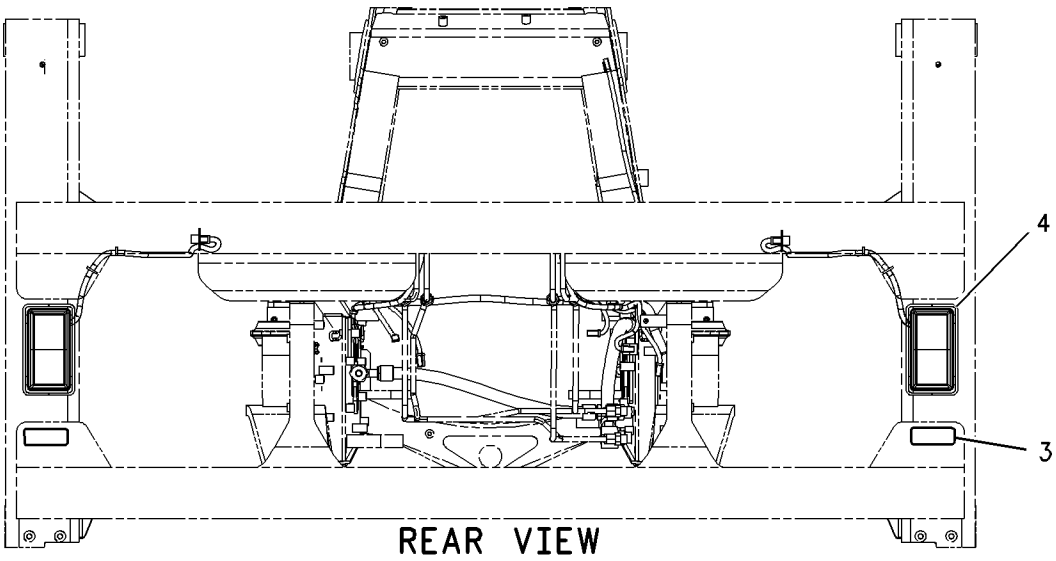


REAR VIEW

GRAPHIC #2 **<END>** g00873226

# *191-6551* LIGHTING GP-ROADING—RH DIP BEAM—SIDE SHIFT—CANOPY

**S/N: BXC1-UP; DSX1-UP**
**CANOPY**
**AN ATTACHMENT**

**SMCS-1429** **i02000039**

| NOTE | REF NO | GRAPHIC REF | PART NUMBER | QTY | PART NAME 1 2 3 4 5 6 (PRODUCT LEVEL) | SEE PAGE |
|---|---|---|---|---|---|---|
| Y | 1 | 1 | **3E-7584** | 2 | LAMP GP-HEAD & SIGNAL | 120 |
| | 2 | 1 | **8T-8737** | 2 | PLUG-SEAL | |
| | 3 | 2 | **9R-1499** | 2 | REFLECTOR | |
| Y | 4 | 2 | *9R-2385* | 2 | LAMP GP-STOP & TAIL | 129 |
| | 5 | 2 | **9R-6247** | 2 | STRAP-CABLE | |
| | 6 | 1 | **137-6215** | 1 | BRACKET | |
| | 7 | 1 | **137-6216** | 1 | BRACKET | |
| | 8 | 1 | **155-2263** | 2 | WEDGE-PLUG LOCK (6 PIN) | |
| | 9 | 1 | **169-0594** | 1 | SWITCH AS (ROADING) | |
| | | 1 | **111-7899** | 1 | GASKET | |
| | 10 | 2 | **173-3175** | 1 | CIRCUIT BREAKER AS | |
| | 11 | 1 | **155-2274** | 2 | KIT-CONNECTING PLUG (6-PIN) | |
| | | | | | (KIT SERVICES PLUG AS AND WEDGE) | |
| | 12 | 1 | **213-8479** | 1 | SWITCH AS-MULTIFUNCTION (LIGHTS, TURN SIGNALS & WIPER) | |
| | 13 | 1,2 | **3S-2093** | 8 | STRAP-CABLE | |
| M | 14 | 1 | **8T-0352** | 2 | BOLT (M5X0.8X45MM) | |
| | 15 | 1 | **8T-4121** | 4 | WASHER-HARD (11X21X2.5MM THK) | |
| M | 16 | 1 | **8T-4137** | 4 | BOLT (M10X1.5X20MM) | |

M-METRIC PART
Y-SEPARATE ILLUSTRATION

*191-6551* **LIGHTING GP-ROADING** *(contd.)* **i02000039**

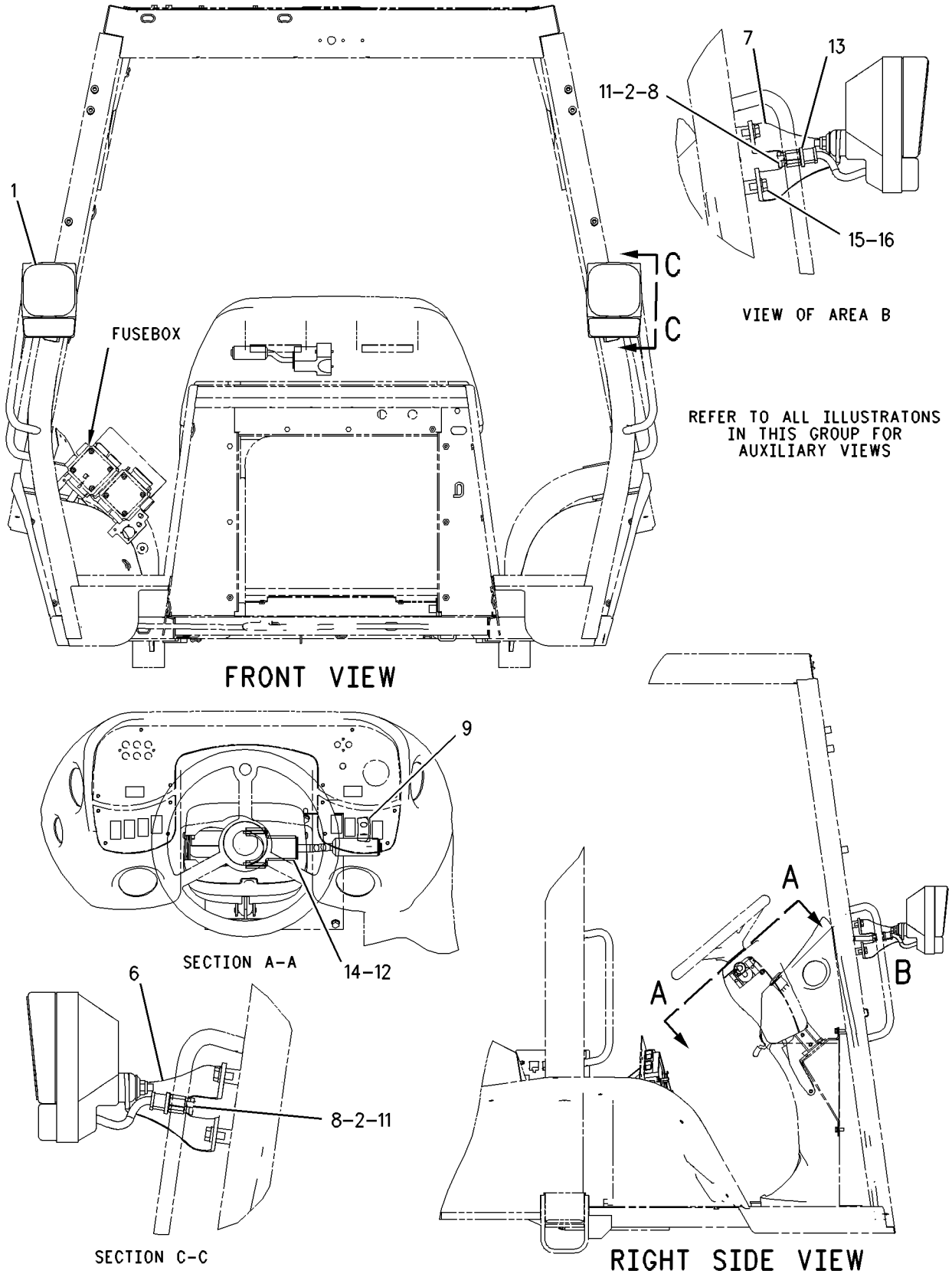


GRAPHIC #1 g00873225

*191-6551* **LIGHTING GP-ROADING** *(contd.)* **i02000039**

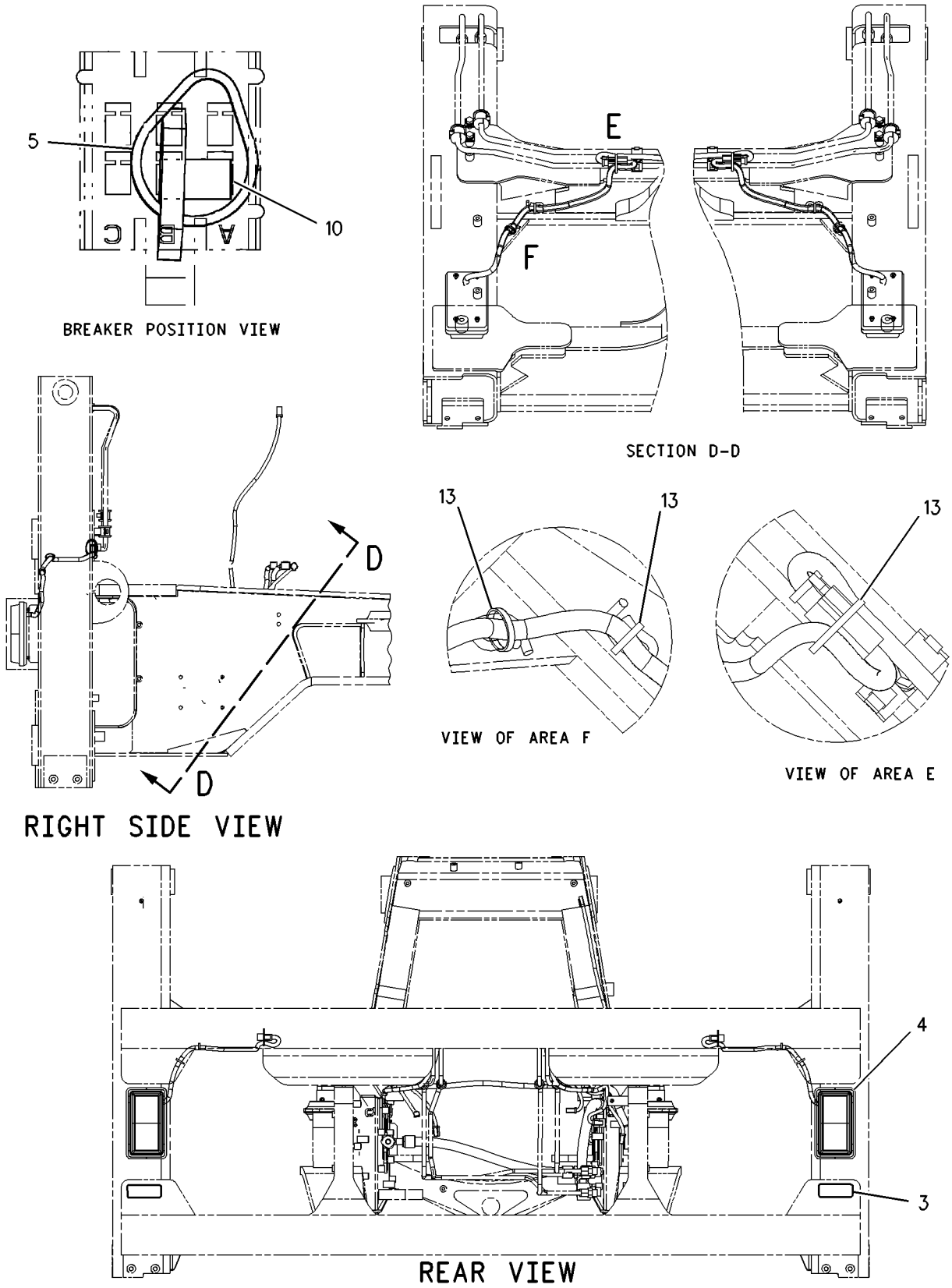


GRAPHIC #2 **<END>** g00873226

# *186-2737* LIGHTING GP-WARNING

**S/N: BXC1-UP; DSX1-UP**
**ITALY**
**PART OF 190-2803, 190-6413 CONVERSION AR-CERTIFICATION**
**AN ATTACHMENT**

**SMCS-1429, 1431** **i01738989**

| NOTE | REF NO | GRAPHIC REF | PART NUMBER | QTY | PART NAME 1 2 3 4 5 6 (PRODUCT LEVEL) | SEE PAGE |
|---|---|---|---|---|---|---|
| M | 1 | 1 | **8T-5027** | 6 | NUT (M6X1.0 THD) | |
| | 2 | 1 | **114-4916** | 1 | BRACKET AS-RH | |
| | 3 | 1 | **122-2050** | 1 | BRACKET AS-LH | |
| Y | 4 | 1 | **180-3663** | 2 | LAMP GP-WARNING BEACON | 131 |
| M | 5 | 1 | **8T-4138** | 6 | BOLT (M6X1X20MM) (BEACON) | |
| | 6 | 1 | **8T-4205** | 6 | WASHER-HARD (7.2X14.5X2MM THK) | |

M-METRIC PART
Y-SEPARATE ILLUSTRATION

*186-2737* **LIGHTING GP-WARNING** *(contd.)* **i01738989**

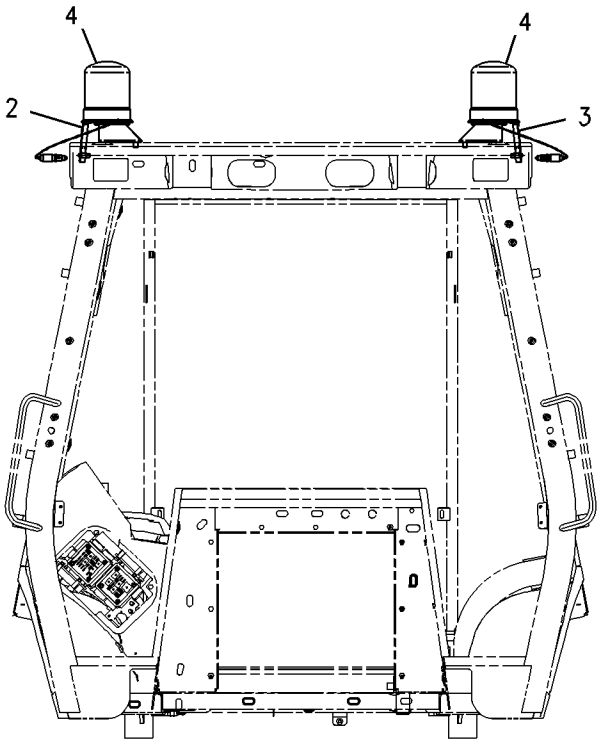


FRONT VIEW

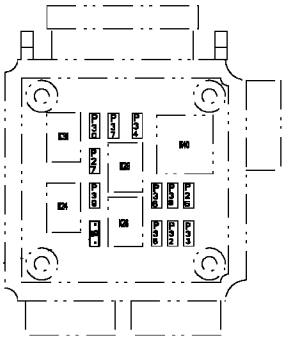

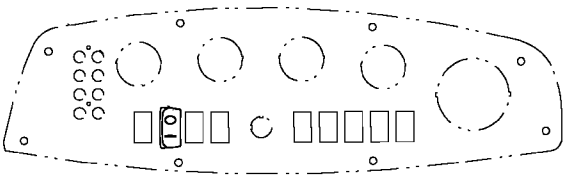

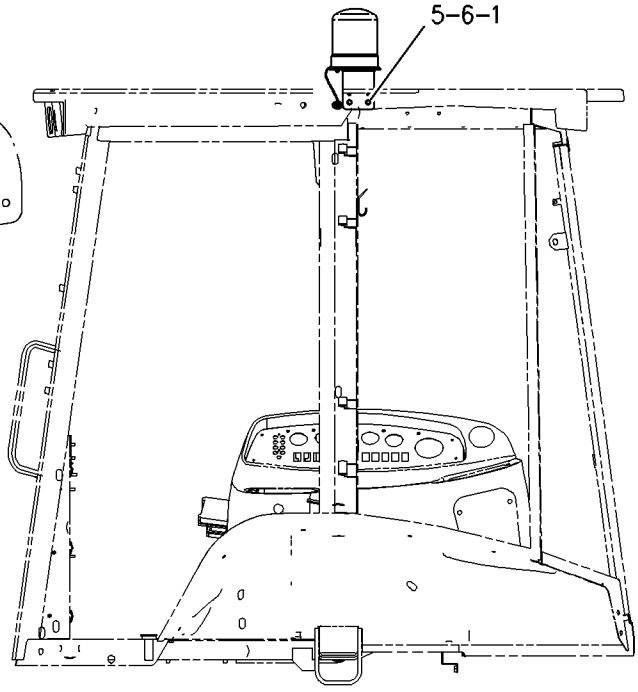


LEFT SIDE VIEW

GRAPHIC #1 **<END>** g00890692

# *104-9502* LIGHTING GP-WARNING BEACON

**S/N: BXC1-UP; DSX1-UP**
**AN ATTACHMENT**

**SMCS-1431** **i01262819**

| NOTE | REF NO | GRAPHIC REF | PART NUMBER | QTY | PART NAME 1 2 3 4 5 6 (PRODUCT LEVEL) | SEE PAGE |
|---|---|---|---|---|---|---|
| CY | 1 | 1 | **180-3664** | 1 | LAMP GP-WARNING BEACON | 132 |
| | 2 | 1 | **104-9504** | 1 | PLATE | |
| M | 3 | 1 | **135-7242** | 3 | SCREW-PAN HEAD | |

C-CHANGE FROM PREVIOUS TYPE
M-METRIC PART
Y-SEPARATE ILLUSTRATION

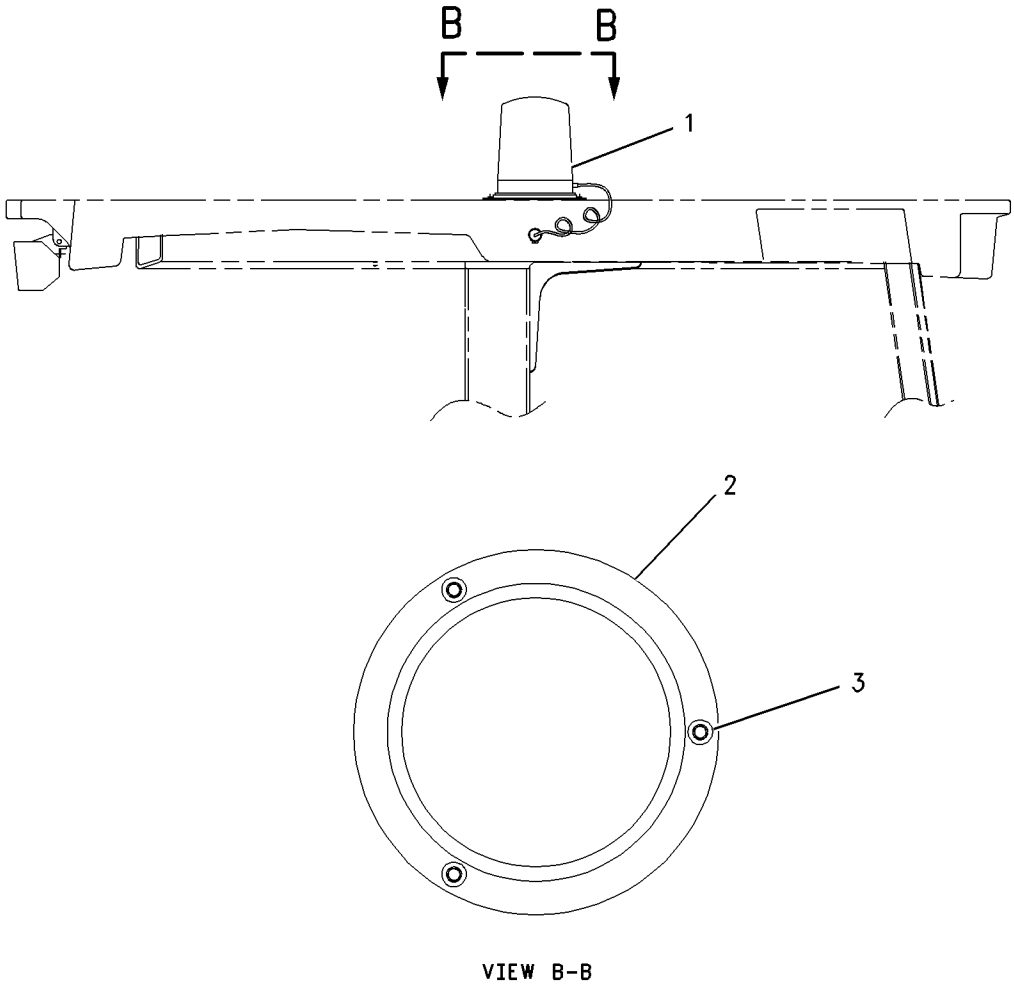


GRAPHIC #1 **<END>** g00673021

# ELECTRICAL AND STARTING SYSTEM

## *141-8292* LIGHTING GP-WARNING BEACON

**S/N: BXC1-UP; DSX1-UP**
**AN ATTACHMENT**

**SMCS-1431** **i01428442**

| NOTE | REF NO | GRAPHIC REF | PART NUMBER | QTY | PART NAME 1 2 3 4 5 6 (PRODUCT LEVEL) | SEE PAGE |
|---|---|---|---|---|---|---|
| CY | 1 | 1 | **180-3663** | 1 | LAMP GP-WARNING BEACON | 131 |
| | 2 | 1 | **114-4916** | 1 | BRACKET AS-RH | |
| | 3 | 1 | **146-0218** | 3 | NUT | |
| M | 4 | 1 | **132-0111** | 3 | SCREW (M6X1.0X35MM) | |
| | 5 | 1 | **8T-4205** | 3 | WASHER-HARD (7.2X14.5X2MM THK) | |

C-CHANGE FROM PREVIOUS TYPE
M-METRIC PART
Y-SEPARATE ILLUSTRATION

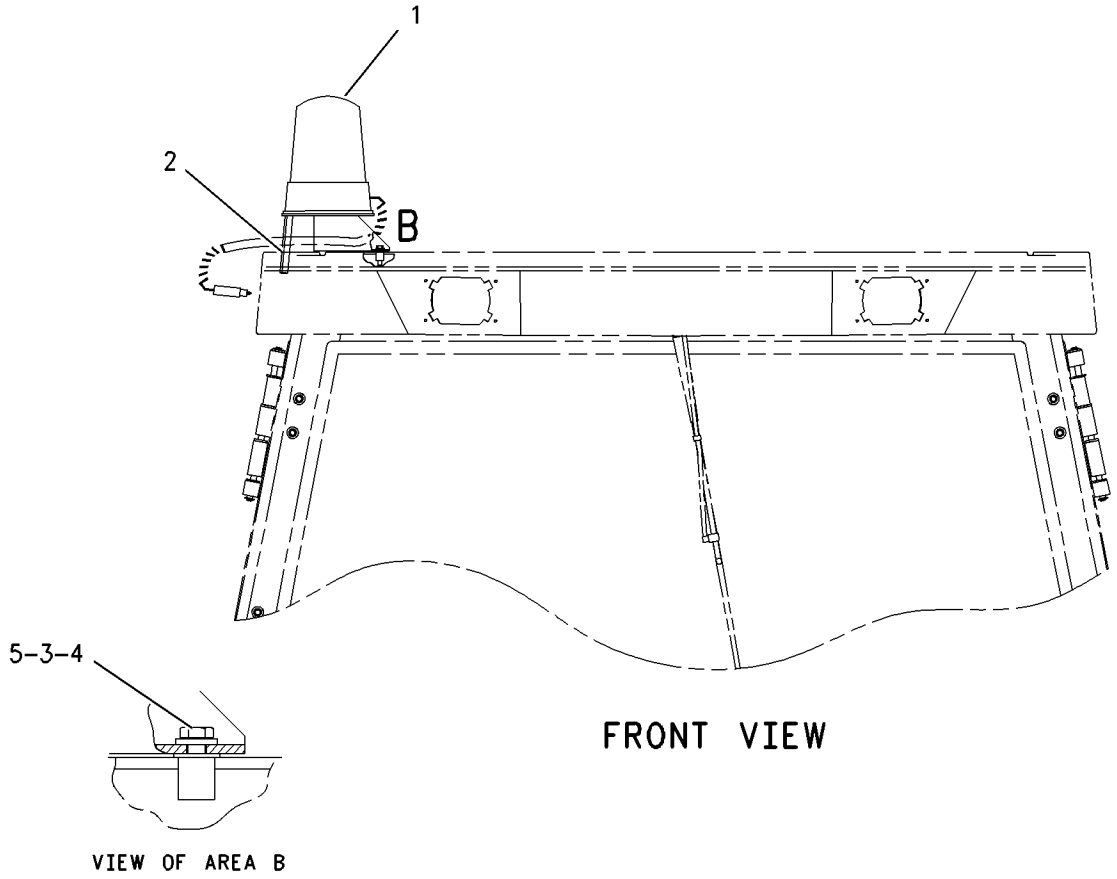


GRAPHIC #1 **<END>** g00748243

## *219-8656* PLUG GP-CONNECTOR—RETURN TO DIG

**S/N: BXC1-UP; DSX1-UP**

**AN ATTACHMENT**

**SMCS-1408** **i01721526**

| NOTE | PART NUMBER | QTY | PART NAME 1 2 3 4 5 6 (PRODUCT LEVEL) | SEE PAGE |
|---|---|---|---|---|
| | **102-8803** | 1 | KIT-RECEPTACLE (3 PIN) | |
| | | | (KIT SERVICES RECEPTACLE AS AND WEDGE) | |
| | **8T-8737** | 3 | PLUG-SEAL | |

**<END>**

# ELECTRICAL AND STARTING SYSTEM

## 143-0539 STARTING MOTOR GP-ELECTRIC*R

**S/N: CRS1-UP**

**PART OF 237-0024 STARTING MOTOR GP-ELECTRIC**

**AN ATTACHMENT**

**SMCS-1453** **i01955580**

| NOTE | REF NO | GRAPHIC REF | PART NUMBER | QTY | PART NAME 1 2 3 4 5 6 (PRODUCT LEVEL) | SEE PAGE |
|---|---|---|---|---|---|---|
| | 1 | 1 | **8C-9778** | 1 | PLUNGER AS | |
| | 2 | 1 | **8C-9783** | 1 | GASKET | |
| | 3 | 1 | **2P-8104** | 1 | BEARING | |
| | 4 | 1 | **7T-6092** | 1 | HOLDER AS-BRUSH | |
| M | 5 | 1 | **8T-4133** | 2 | NUT (M10X1.5 THD) | |
| | 6 | 1 | **7T-6088** | 1 | BEARING AS | |
| | 7 | 1 | **7T-6087** | 1 | WASHER | |
| | 8 | 1 | **7T-6093** | 1 | CLUTCH AS | |
| | 9 | 1 | **8J-4455** | 1 | BALL | |
| | 10 | 1 | **7T-6090** | 1 | SPRING | |
| | 11 | 1 | **8T-4121** | 2 | WASHER-HARD (11X21X2.5MM THK) | |
| | 12 | 1 | **3E-5153** | 1 | COVER-STARTING MOTOR | |
| M | 13 | 1 | **9X-2036** | 1 | SCREW-PAN HEAD | |
| | 14 | 1 | **8F-1434** | 1 | LOCKWASHER | |
| | 15 | 1 | **100-4113** | 1 | SWITCH AS (STARTER) (12V) | |
| | 16 | 1 | **100-4119** | 1 | ARMATURE AS | |
| | 17 | 1 | **100-4118** | 1 | CASE AS-STARTING MOTOR | |
| | 18 | 1 | **100-4115** | 1 | HOUSING-STARTING MOTOR | |
| | 19 | 1 | **143-1344** | 1 | FRAME-STARTER | |
| | 20 | 1 | **100-3685** | 1 | CAP | |
| | 21 | 1 | **3E-5154** | 1 | BUSHING-STARTING MOTOR | |
| | | | | | AVAILABLE REPAIR KIT(S): | |
| | | | **7T-6099** | 1 | KIT-GEAR (STARTING MOTOR) | |
| | | | | | (INCLUDES RETAINER, PINION & ROLLERS) | |
| | | | **8C-5457** | 1 | KIT-CONTACT (STARTING MOTOR) | |
| | | | | | (INCLUDES NUT, WASHER, PLATE, BUSHINGS, & BOLT) | |
| | | | **146-6729** | 1 | KIT-HARDWARE (STARTING MOTOR) | |
| | | | | | (INCLUDES BOLTS, SCREWS, SCREW ASSEMBLIES & PLATE) | |
| | | | **100-4112** | 1 | KIT-CONTACT (STARTING MOTOR) | |
| | | | | | (INCLUDES NUT, WASHERS, SEAL, BUSHINGS, PLATE & BOLT) | |

M-METRIC PART

**143-0539 STARTING MOTOR GP-ELECTRIC** *(contd. )* **i01955580**

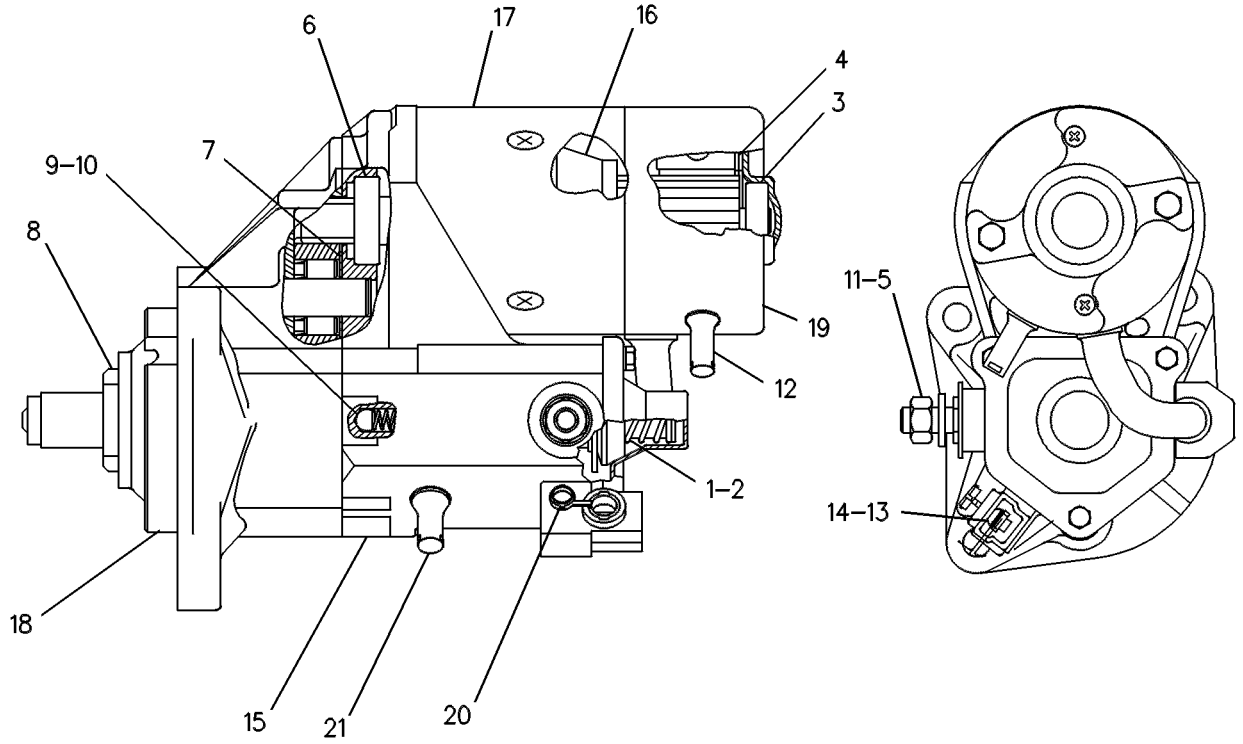


GRAPHIC #1 **<END>** g00131126

# ELECTRICAL AND STARTING SYSTEM

## *237-0024* STARTING MOTOR GP-ELECTRIC

**S/N: CRS1-UP**

**PART OF 234-3059, 234-3061 ENGINE AR-PRIMARY**

**AN ATTACHMENT**

**SMCS-1453** **i01991978**

| NOTE | REF NO | GRAPHIC REF | PART NUMBER | QTY | PART NAME 1 2 3 4 5 6 (PRODUCT LEVEL) | SEE PAGE |
|---|---|---|---|---|---|---|
| | 1 | 1 | **6I-0364** | 3 | STUD (M10X1.5X30MM) | |
| | 2 | 1 | **6I-0594** | 3 | NUT (M10X1.5) | |
| YR | 3 | 1 | **143-0539** | 1 | STARTING MOTOR GP-ELECTRIC | 166 |

R-REMFG PART MAY BE AVAILABLE
Y-SEPARATE ILLUSTRATION

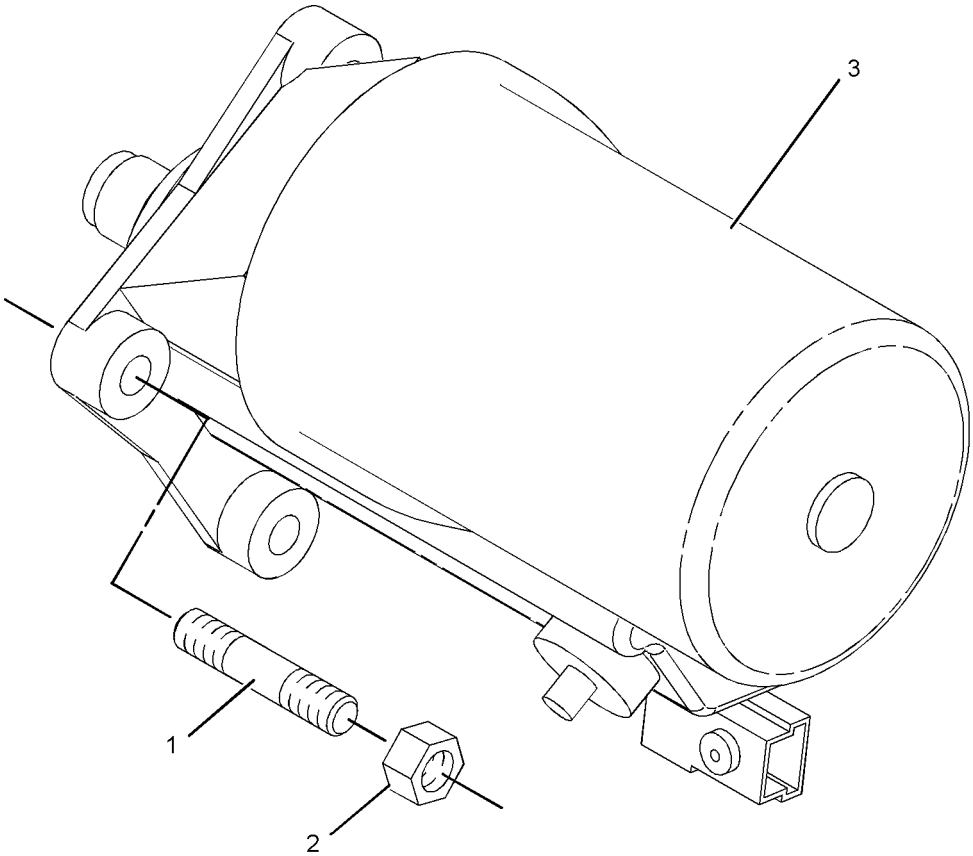


GRAPHIC #1 **<END>** g01039910

# *237-4896* SWITCH GP-PRESSURE

**S/N: CRS1-UP**

**PART OF 234-3059, 234-3061 ENGINE AR-PRIMARY**

**AN ATTACHMENT**

**SMCS-1435** **i01991988**

| NOTE | REF NO | GRAPHIC REF | PART NUMBER | QTY | PART NAME 1 2 3 4 5 6 (PRODUCT LEVEL) | SEE PAGE |
|---|---|---|---|---|---|---|
| | 1 | 1 | **237-4894** | 1 | SWITCH-OIL PRESS (ENGINE) | |

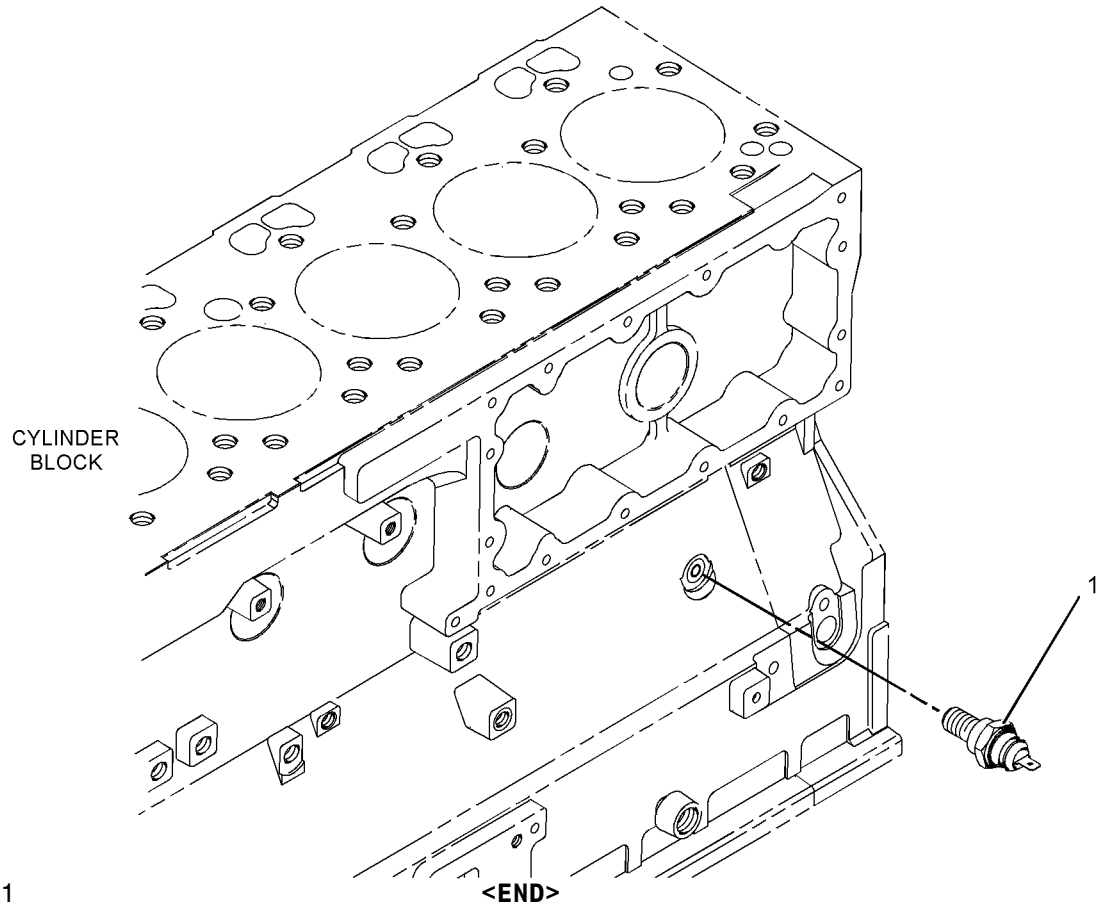


GRAPHIC #1 **<END>** g01039594

# ELECTRICAL AND STARTING SYSTEM

## *235-8749* SWITCH GP-TEMPERATURE

**S/N: CRS1-UP**

**PART OF 234-3059, 234-3061 ENGINE AR-PRIMARY**

**AN ATTACHMENT**

**SMCS-7400, 7417** **i01998673**

| NOTE | REF NO | GRAPHIC REF | PART NUMBER | QTY | PART NAME 1 2 3 4 5 6 (PRODUCT LEVEL) | SEE PAGE |
|---|---|---|---|---|---|---|
| | 1 | 1 | **199-9751** | 1 | SEAL-O-RING | |
| | 2 | 1 | **235-8747** | 1 | SWITCH-WATER TEMPERATURE | |

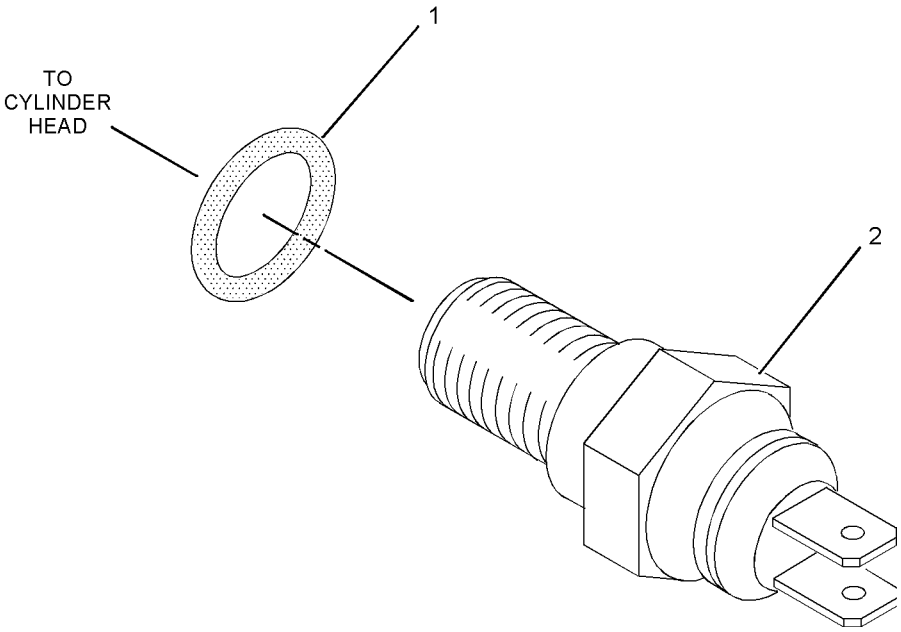


GRAPHIC #1 **<END>** g01036068

# ELECTRICAL AND STARTING SYSTEM

## *193-2343* WARNING GP-BACKUP

**S/N: BXC1-UP; DSX1-UP**

**AN ATTACHMENT**

**SMCS-7406** **i01936509**

| NOTE | REF NO | GRAPHIC REF | PART NUMBER | QTY | PART NAME 1 2 3 4 5 6 (PRODUCT LEVEL) | SEE PAGE |
|---|---|---|---|---|---|---|
| | 1 | 1 | **9U-2277** | 1 | CLIP AS | |
| | 2 | 1 | **154-5428** | 1 | WARNING GP-BACKUP | |
| | | 1 | **102-8802** | 1 | KIT-RECEPTACLE (2 PIN) | |
| BM | 3 | 1 | **111-4627** | 1 | SCREW-MACHINE (M6X1.0X30MM) | |
| BM | 4 | 1 | **5C-2890** | 1 | NUT (M6X1 THD) | |
| BM | 5 | 1 | **9X-2044** | 2 | SCREW-TRUSS HEAD (M6X1X16MM) | |
| B | 6 | 1 | **9X-6165** | 2 | WASHER (6.5X22X2.5MM THK) | |

B-USE AS REQUIRED
M-METRIC PART

*193-2343* **WARNING GP-BACKUP** ***(contd. )*** **i01936509**

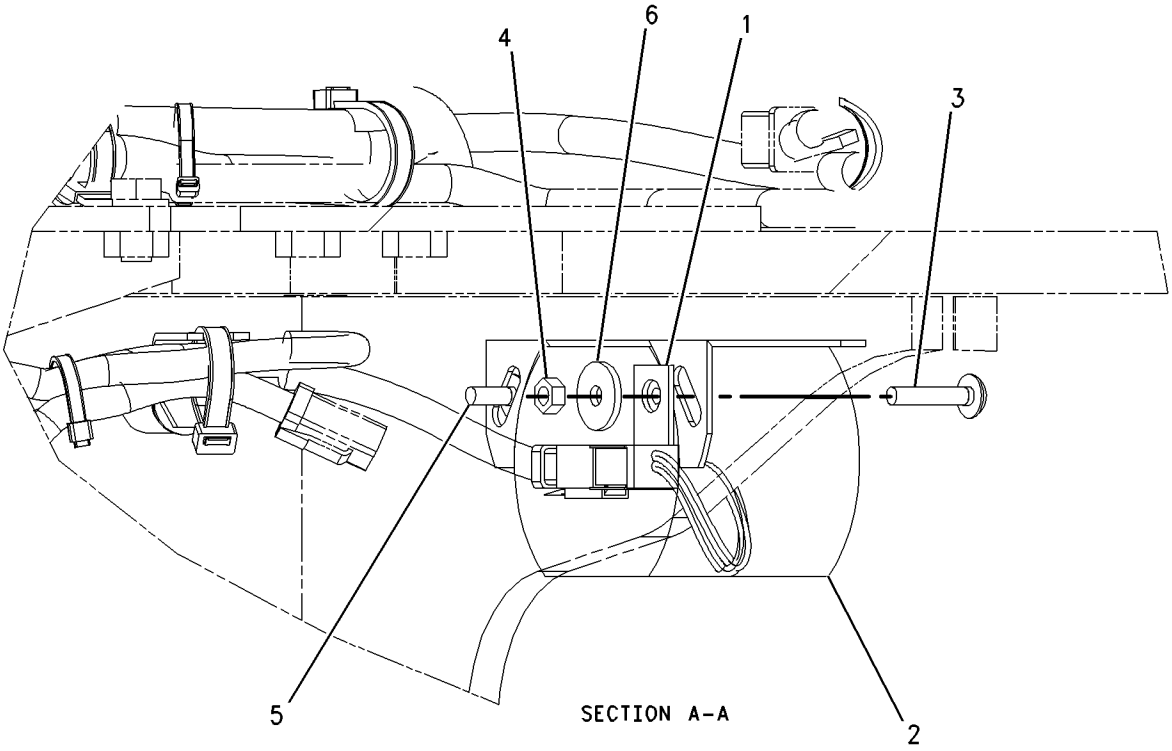


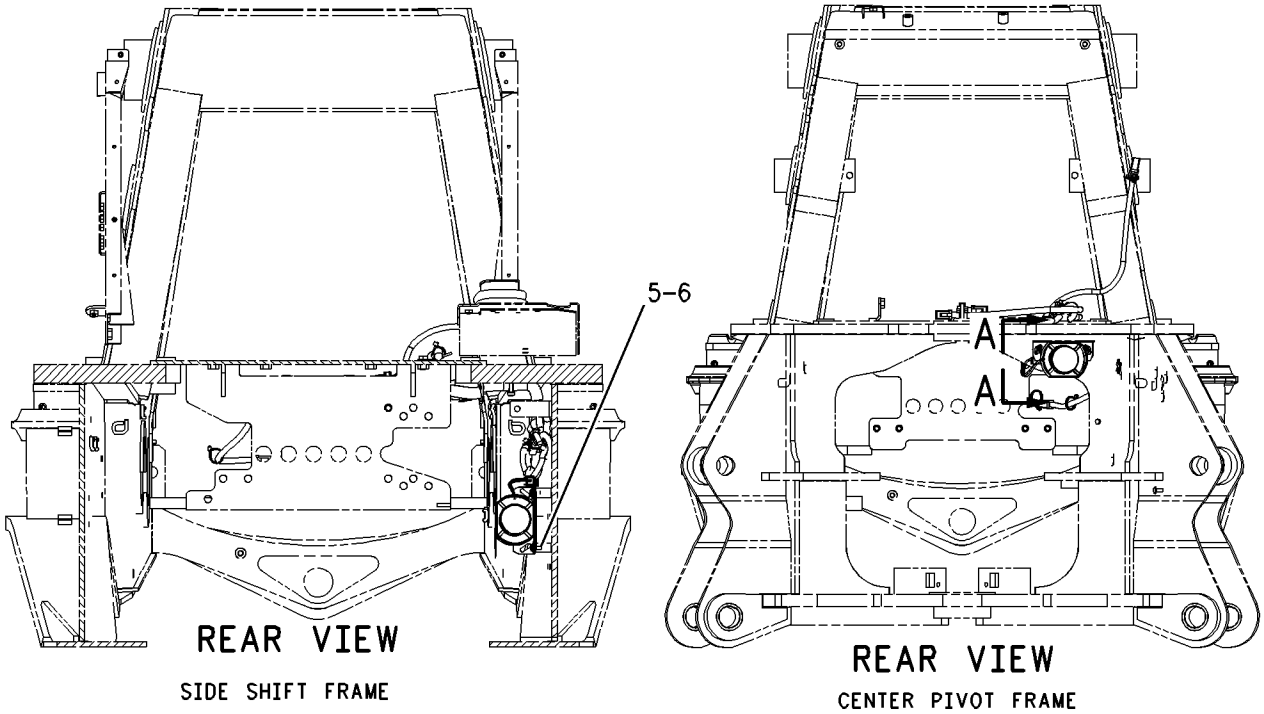


GRAPHIC #1 **<END>** g00831275

# ELECTRICAL AND STARTING SYSTEM

## *238-1811* WIRING GP-AIR CONDITIONER

**S/N: BXC1-UP; DSX1-UP**

**PART OF 214-7007 CAB AR, 214-7009 CAB AR-ENCLOSED ROPS AN ATTACHMENT**

**SMCS-1408, 7320** **i01985046**

| NOTE | REF NO | GRAPHIC REF | PART NUMBER | QTY | PART NAME 1 2 3 4 5 6 (PRODUCT LEVEL) | SEE PAGE |
|---|---|---|---|---|---|---|
| | 1 | 1 | **3E-9362** | 1 | RELAY AS (12 VOLT) (HIGH SPEED) | |
| | 2 | 1 | **8Y-7833** | 1 | WIRE AS | |
| | 3 | 2 | **106-8704** | 1 | SUPPRESSOR AS-ARC | |
| | | 2 | **102-8802** | 1 | KIT-RECEPTACLE (2-PIN) | |
| | | | | | (INCLUDES RECEPTACLE AND WEDGE) | |
| | | 2 | **186-3735** | 2 | PIN-CONNECTOR | |
| | 4 | 2 | **113-8490** | 1 | FUSE (10 AMP) | |
| | 5 | 1 | **131-3201** | 2 | BOOT | |
| | 6 | 2 | **169-0605** | 1 | SWITCH AS-ROCKER (HEATER FAN SPEED) | |
| | | 2 | **111-7899** | 1 | GASKET | |
| | 7 | 2 | **169-0606** | 1 | SWITCH AS-ROCKER (HEAT / AC) | |
| | | 2 | **111-7899** | 1 | GASKET | |
| | 8 | 2 | **170-2237** | 1 | RELAY AS (12 VOLT) | |
| | 9 | 1 | **229-8377** | 1 | CIRCUIT BREAKER AS (35AMP) | |
| | | 1 | **6V-8378** | 2 | NUT (10-32 THD) | |
| | | 1 | **8F-1434** | 2 | LOCKWASHER (INTERNAL TOOTH) | |
| | | 1 | **8T-0328** | 2 | WASHER-HARD (5.5X10X1MM THK) | |
| | 10 | 1 | **229-8413** | 1 | HARNESS AS-HEATER & AIR COND | |
| | | 1 | **102-8802** | 1 | KIT-RECEPTACLE (2-PIN) | |
| | | | | | (INCLUDES RECEPTACLE AND WEDGE) | |
| | | 1 | **102-8804** | 1 | KIT-RECEPTACLE (4-PIN) | |
| | | | | | (INCLUDES RECEPTACLE AND WEDGE) | |
| | | 1 | **155-2270** | 1 | KIT-CONNECTING PLUG (2-PIN) | |
| | | | | | (INCLUDES PLUG AND WEDGE) | |
| | | 1 | **177-9645** | 1 | KIT-RECEPTACLE (2-PIN) | |
| | | | | | (INCLUDES RECEPTACLE AND WEDGE) | |
| | | 1 | **177-9648** | 1 | KIT-CONNECTING PLUG (2-PIN) | |
| | | | | | (INCLUDES PLUG AND WEDGE) | |
| | 11 | 2 | **236-6923** | 1 | SWITCH AS-PRESSURE (HIGH - LOW) | |
| | 12 | 2 | **238-7492** | 1 | HARNESS AS-HEATER & AIR COND | |
| | | 2 | **102-8802** | 1 | KIT-RECEPTACLE (2-PIN) | |
| | | | | | (INCLUDES RECEPTACLE AND WEDGE) | |
| | | 2 | **155-2270** | 2 | KIT-CONNECTING PLUG (2-PIN) | |
| | | | | | (EACH INCLUDES PLUG AND WEDGE) | |
| M | 13 | 1 | **138-8454** | 1 | SCREW-TRUSS HEAD (M4X0.7X10MM) | |
| | 14 | 1 | **213-7315** | 2 | SCREW-TRUSS HEAD (M4X0.7X25MM) | |
| | 15 | 1,2 | **3S-2093** | 3 | STRAP-CABLE | |
| | 16 | 1 | **4B-4863** | 1 | WASHER (4.7X11X1.2MM THK) | |
| | 17 | 2 | **4P-8134** | 1 | CLIP | |
| | 18 | 2 | **8T-4121** | 2 | WASHER-HARD (11X21X2.5MM THK) | |
| M | 19 | 2 | **8T-4133** | 1 | NUT (M10X1.5 THD) | |
| M | 20 | 2 | **8T-4195** | 1 | BOLT (M10X1.5X30MM) | |

M-METRIC PART

*238-1811* **WIRING GP-AIR CONDITIONER** *(contd.)* **i01985046**

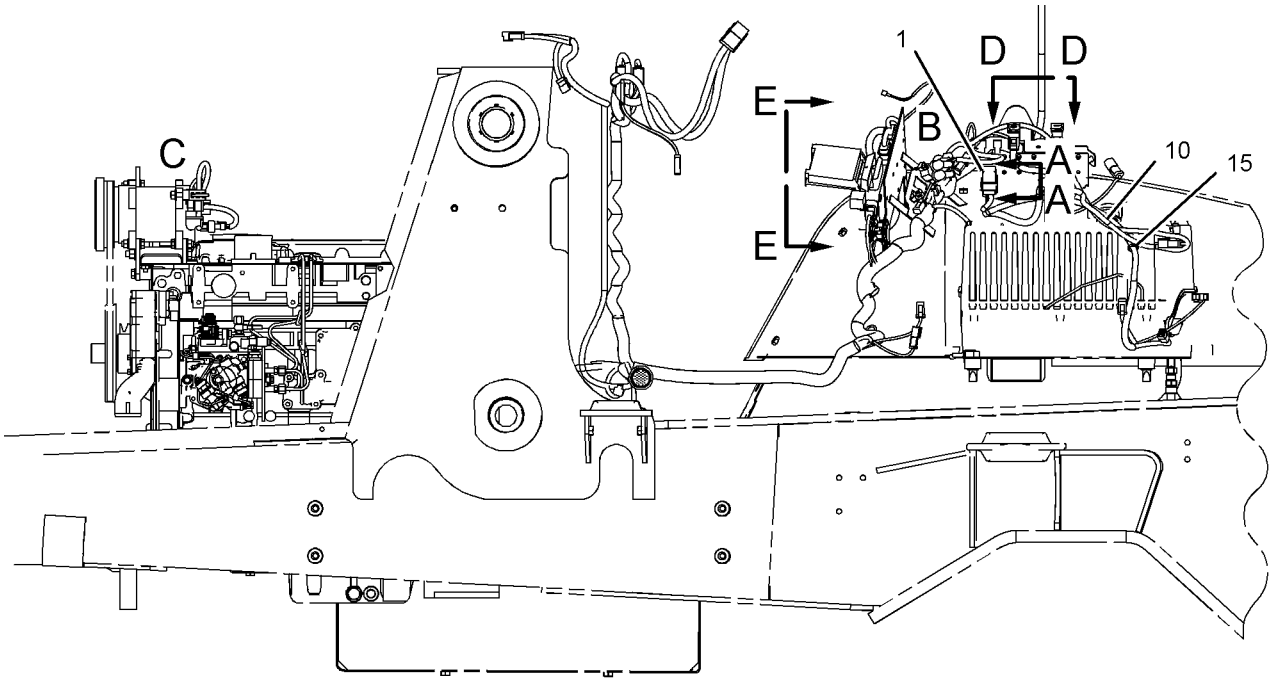


LEFT SIDE VIEW

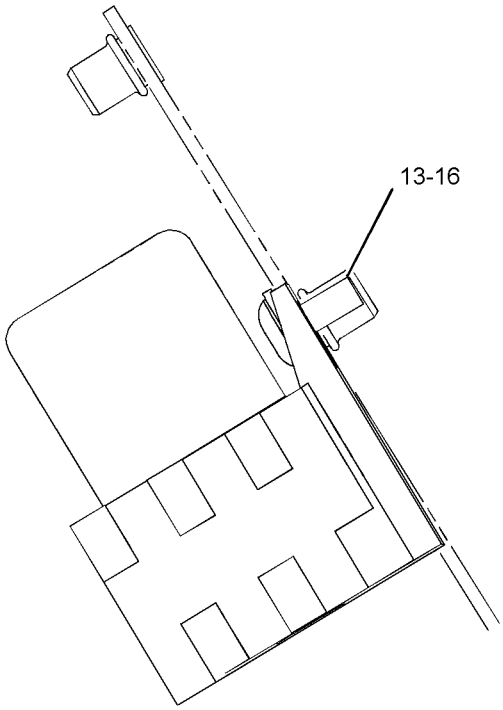


VIEW A-A

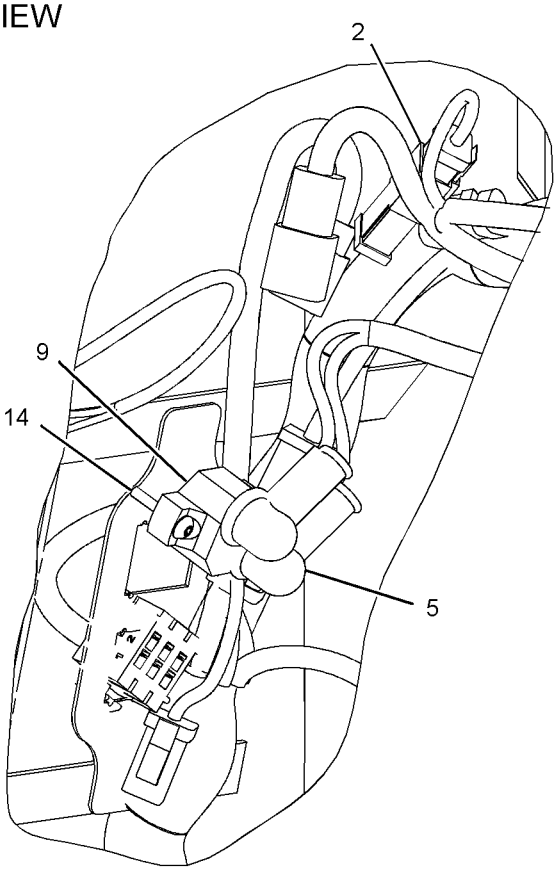


VIEW OF AREA B

GRAPHIC #1 g01032689

*238-1811* **WIRING GP-AIR CONDITIONER** *(contd.)* **i01985046**

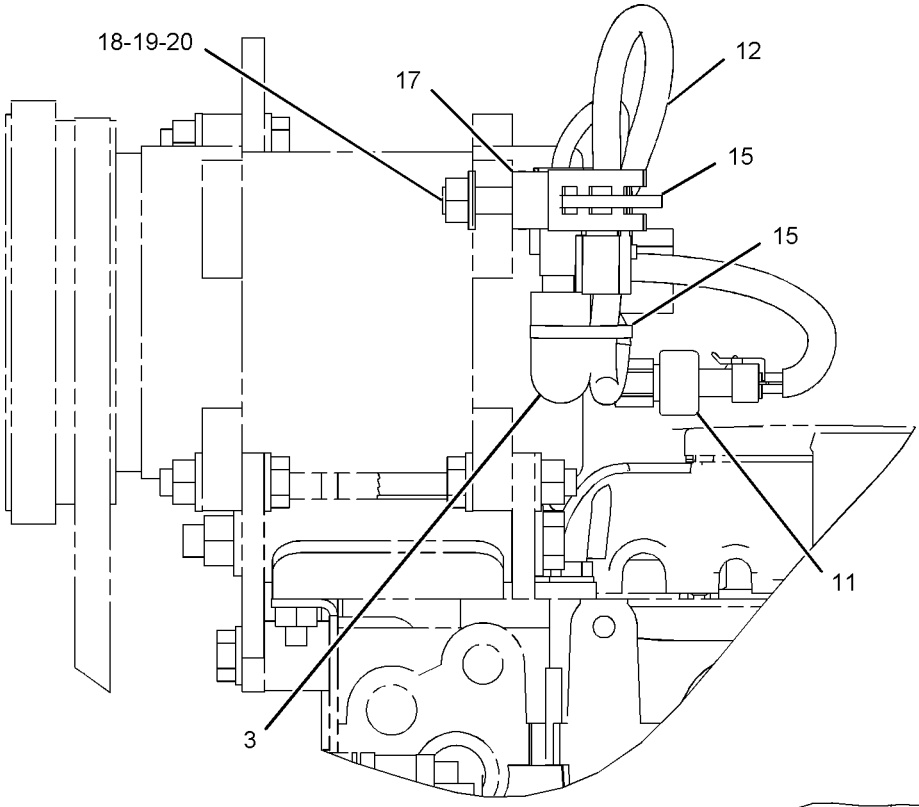


VIEW OF AREA C

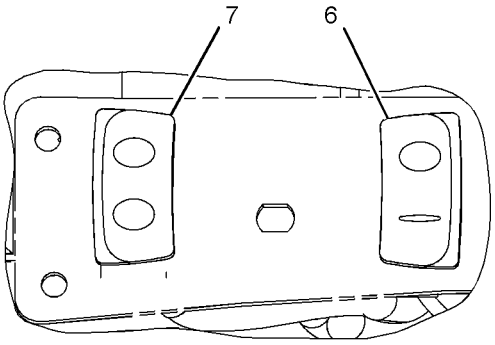


VIEW D-D

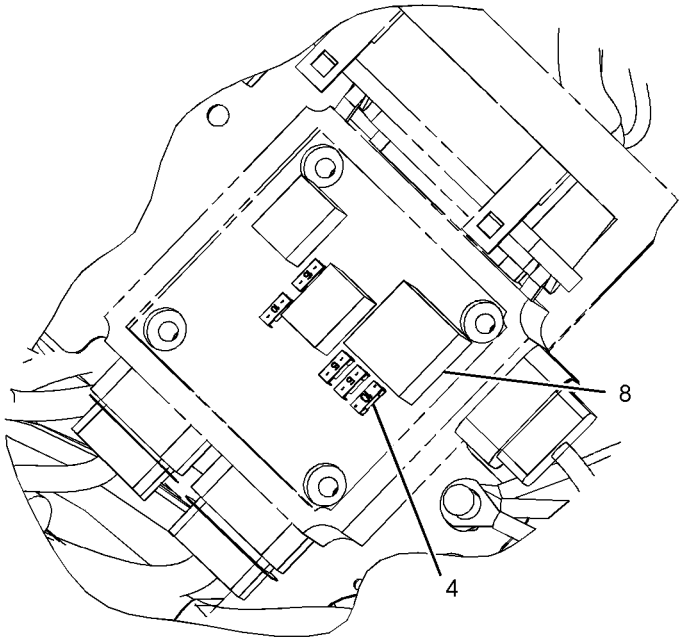


VIEW E-E

GRAPHIC #2 **<END>** g01032690

# *237-8037* WIRING GP-AUTOSHIFT

**S/N: BXC1-UP; DSX1-UP**
**PART OF 214-7013, 214-7015 POWER TRAIN AR**
**AN ATTACHMENT**

**SMCS-3104, 3168** **i01994421**

| NOTE | REF NO | GRAPHIC REF | PART NUMBER | QTY | PART NAME 1 2 3 4 5 6 (PRODUCT LEVEL) | SEE PAGE |
|---|---|---|---|---|---|---|
| | 1 | 1 | **3E-8679** | 1 | DIODE AS-LIGHT | |
| | 2 | 1 | **3S-2093** | 17 | STRAP-CABLE | |
| | 3 | 1 | **6K-0806** | 5 | STRAP-CABLE | |
| | 4 | 1 | **7K-1181** | 2 | STRAP-CABLE | |
| | 5 | 1 | **8Y-7833** | 1 | WIRE AS | |
| | 6 | 1 | **106-8704** | 1 | SUPPRESSOR AS-ARC | |
| | | 1 | **102-8802** | 2 | KIT-RECEPTACLE (2-PIN) | |
| | | 1 | **186-3735** | 1 | PIN-CONNECTOR | |
| | 7 | 1 | **155-8522** | 3 | MOUNT | |
| | 8 | 1 | **169-0604** | 1 | SWITCH AS-ROCKER (AUTOSHIFT) (AUTOSHIFT) | |
| | | 1 | **111-7899** | 1 | GASKET | |
| | 9 | 1 | **174-6411** | 1 | HARNESS AS-TRANSMISSION (AUTOSHIFT SWITCH) | |
| | | 1 | **155-2271** | 1 | KIT-CONNECTING PLUG (4-PIN) | |
| | 10 | 1 | **174-6415** | 1 | HARNESS AS-PLATFORM (AUTOSHIFT) | |
| | | 1 | **102-8802** | 1 | KIT-RECEPTACLE (2-PIN) | |
| | | 1 | **102-8804** | 1 | KIT-RECEPTACLE (4-PIN) | |
| | | 1 | **102-8805** | 1 | KIT-RECEPTACLE (6-PIN) | |
| | | 1 | **102-8801** | 1 | KIT-RECEPTACLE (12-PIN) | |
| | | 1 | **155-2256** | 1 | KIT-CONNECTING PLUG (12-PIN) | |
| | | 1 | **155-2271** | 1 | KIT-CONNECTING PLUG (4-PIN) | |
| | 11 | 1 | **174-6649** | 1 | CONTROL GP-TRANSMISSION | |
| | 12 | 1 | **209-1925** | 1 | HARNESS AS-TRANSMISSION (AUTOSHIFT CONTROL) | |
| | | | **102-8804** | 1 | KIT-RECEPTACLE (4-PIN) | |
| | | | **155-2255** | 2 | KIT-CONNECTING PLUG (12-PIN) | |
| | | | **155-2270** | 3 | KIT-CONNECTING PLUG (2-PIN) | |
| | 13 | 1 | **209-1947** | 1 | HARNESS AS-TRANSMISSION (AUTOSHIFT) | |
| | | 1 | **102-8801** | 1 | KIT-RECEPTACLE (12-PIN) | |
| | | 1 | **102-8802** | 1 | KIT-RECEPTACLE (2-PIN) | |
| | | 1 | **155-2260** | 2 | KIT-CONNECTING PLUG (3-PIN) | |
| | | 1 | **155-2270** | 4 | KIT-CONNECTING PLUG (2-PIN) | |
| | 14 | 1 | **237-3655** | 1 | CONTROL GP-POWER TRAIN | |
| M | 15 | 1 | **095-0756** | 4 | SCREW-MACHINE | |
| M | 16 | 1 | **138-8454** | 1 | SCREW-TRUSS HEAD (M4X0.7X10MM) | |
| | 17 | 1 | **3E-9362** | 1 | RELAY AS (12 VOLT) | |
| | 18 | 1 | **4B-4863** | 1 | WASHER (4.7X11X1.2MM THK) | |
| | 19 | 1 | **4P-7429** | 1 | CLIP | |
| M | 20 | 1 | **5C-9553** | 4 | BOLT (M6X1X16MM) | |
| M | 21 | 1 | **8T-4179** | 1 | BOLT (M12X1.75X20MM) | |
| | 22 | 1 | **8T-4223** | 1 | WASHER-HARD (13.5X25.5X3MM THK) | |
| | 23 | 1 | **9X-8256** | 4 | WASHER (6.6X12X2MM THK) | |

M-METRIC PART

*237-8037* **WIRING GP-AUTOSHIFT** *(contd.)* **i01994421**

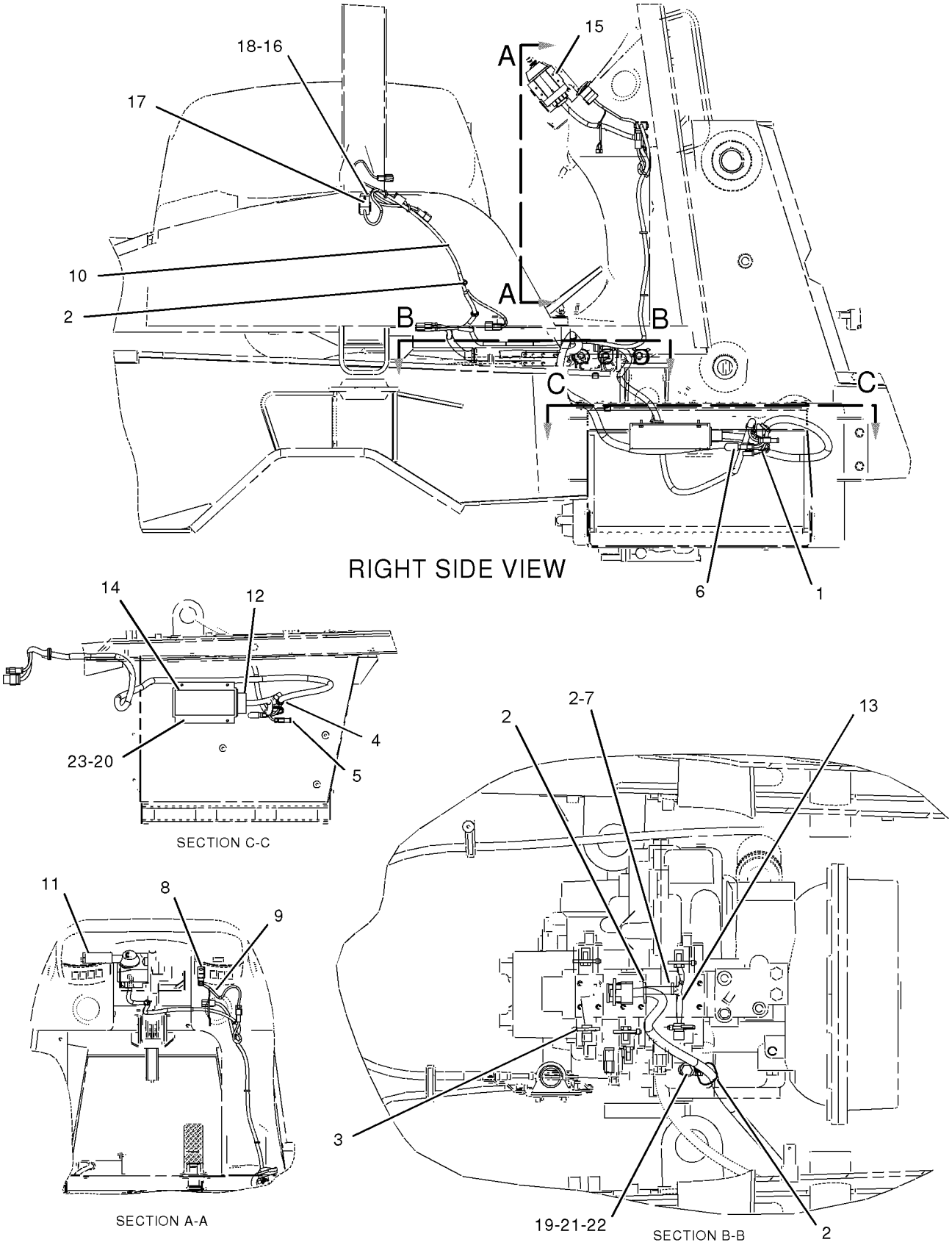


GRAPHIC #1 **<END>** g01032412

# *185-8801* WIRING GP-CAB

**S/N: BXC1-UP; DSX1-UP**

**PART OF 214-7006, 214-7007 CAB AR, 214-7008, 214-7009 CAB AR-ENCLOSED ROPS AN ATTACHMENT**

**SMCS-1408, 7301** **i01937003**

| NOTE | REF NO | GRAPHIC REF | PART NUMBER | QTY | PART NAME 1 2 3 4 5 6 (PRODUCT LEVEL) | SEE PAGE |
|---|---|---|---|---|---|---|
| | 1 | 1 | **8E-1118** | 1 | ANTENNA AS | |
| | 2 | 1 | **8R-6111** | 1 | CABLE AS-COAXIAL | |
| | 3 | 1 | **113-8492** | 2 | FUSE (20 AMP) | |
| | 4 | 1 | **141-2759** | 1 | FUSE (5 AMP) | |
| | 5 | 1 | **146-9439** | 1 | RELAY AS (12 VOLT) (SIDE CONTROL) | |
| | 6 | 1 | **169-0596** | 1 | SWITCH AS (REAR WIPER/WASHER) | |
| | | 1 | **111-7899** | 1 | GASKET | |
| | 7 | 1 | **179-1215** | 1 | HARNESS AS-CAB (UPPER CAB CONTROLS) | |
| | | 1 | **102-8806** | 1 | KIT-RECEPTACLE (8 PIN) | |
| | | 1 | **155-2260** | 1 | KIT-CONNECTING PLUG (3 PIN) | |
| | | 1 | **155-2271** | 1 | KIT-CONNECTING PLUG (4 PIN) | |
| | | 1 | **155-2274** | 1 | KIT-CONNECTING PLUG (6 PIN) | |
| | | 1 | **155-2265** | 1 | KIT-CONNECTING PLUG (8 PIN) | |
| | 8 | 1 | **213-8479** | 1 | SWITCH AS-MULTIFUNCTION (LIGHTS, TURN SIGNALS & WIPER) | |
| | 9 | 1 | **3S-2093** | 6 | STRAP-CABLE | |
| | 10 | 1 | **4P-8134** | 1 | CLIP | |
| M | 11 | 1 | **8T-0352** | 2 | BOLT (M5X0.8X45MM) | |
| | 12 | 1 | **8T-4121** | 2 | WASHER-HARD (11X21X2.5MM THK) | |
| M | 13 | 1 | **8T-4133** | 2 | NUT (M10X1.5 THD) | |

M-METRIC PART

*185-8801* **WIRING GP-CAB** *(contd.)* **i01937003**

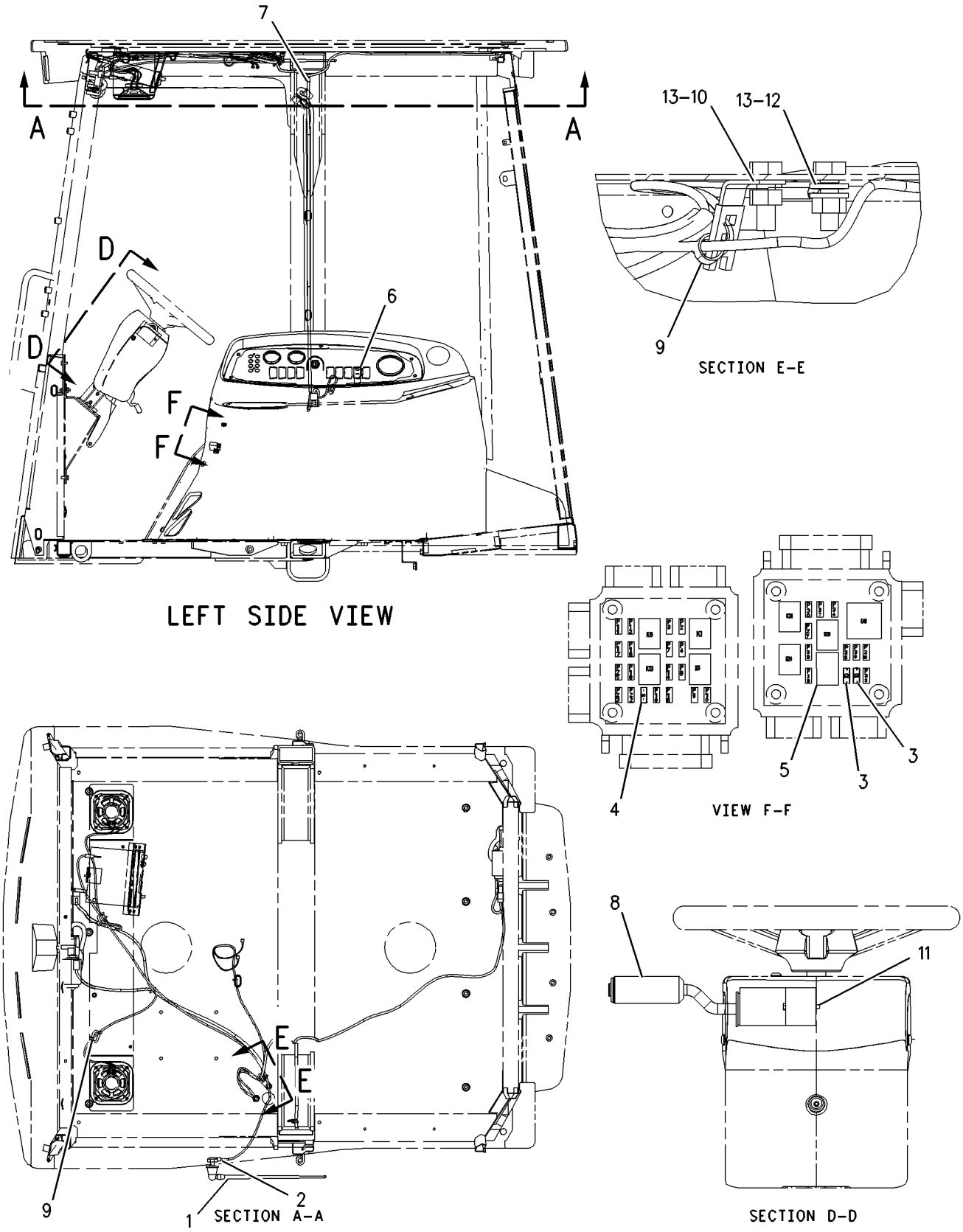


GRAPHIC #1 **<END>** g00874126

# *185-8802* WIRING GP-CAB—TURN SIGNAL

**S/N: BXC1-UP; DSX1-UP**
**PART OF 214-7004 CANOPY AR**
**AN ATTACHMENT**

**SMCS-1408, 7301** **i02000604**

| NOTE | REF NO | GRAPHIC REF | PART NUMBER | QTY | PART NAME 1 2 3 4 5 6 (PRODUCT LEVEL) | SEE PAGE |
|---|---|---|---|---|---|---|
| | 1 | 1 | **138-4894** | 1 | SWITCH AS (TURN SIGNAL) | |
| | | 1 | **111-7899** | 1 | GASKET | |
| | 2 | 1 | **164-1601** | 1 | BRACKET | |
| | 3 | 1 | **183-4492** | 1 | HARNESS AS-OPERATOR CONTROLS (TURN SIGNAL) | |
| | | 1 | **102-8801** | 1 | KIT-RECEPTACLE (12-PIN) | |
| | | | | | (KIT SERVICES RECEPTACLE AS AND WEDGE) | |
| M | 4 | 1 | **125-3298** | 3 | BOLT-SOCKET HEAD (M5X.8X12MM) | |

M-METRIC PART

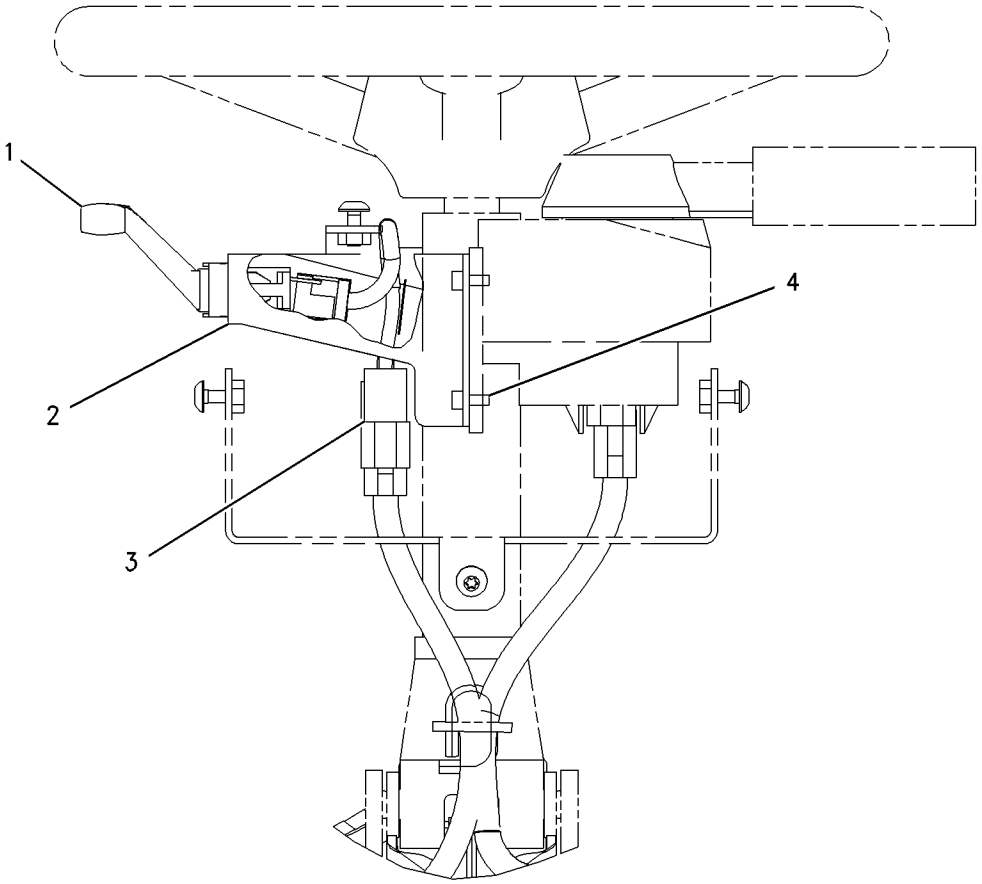


GRAPHIC #1 **<END>** g00746428

# ELECTRICAL AND STARTING SYSTEM

## *194-1950* WIRING GP-CAB

**S/N: BXC1-UP; DSX1-UP**

**AN ATTACHMENT**

**SMCS-1408, 7301** **i01937523**

| NOTE | REF NO | GRAPHIC REF | PART NUMBER | QTY | PART NAME 1 2 3 4 5 6 (PRODUCT LEVEL) | SEE PAGE |
|---|---|---|---|---|---|---|
| | 1 | 1 | **3E-9362** | 2 | RELAY AS (12 VOLT) (DEAD ENGINE LOWER) | |
| | 2 | 1 | **3S-2093** | 24 | STRAP-CABLE | |
| | 3 | 1 | **106-8704** | 1 | SUPPRESSOR AS-ARC | |
| | | 1 | **3E-3365** | 1 | WEDGE-RECEPTACLE LOCK (2 PIN) | |
| | | 1 | **186-3735** | 2 | PIN-CONNECTOR | |
| | | 1 | **102-8802** | 1 | KIT-RECEPTACLE (2 PIN) | |
| | 4 | 1 | **113-8490** | 1 | FUSE (10 AMP) | |
| | 5 | 1 | **193-8639** | 1 | SWITCH AS (DEAD ENGINE LOWER) | |
| | | 1 | **111-7899** | 1 | GASKET | |
| | 6 | 1 | **194-1937** | 1 | HARNESS AS-CONSOLE (DEAD ENGINE LOWER) | |
| | | 1 | **102-8804** | 1 | KIT-RECEPTACLE (4 PIN) | |
| | | 1 | **155-2260** | 1 | KIT-CONNECTING PLUG (3 PIN) | |
| | | 1 | **155-2270** | 1 | KIT-CONNECTING PLUG (2 PIN) | |
| | 7 | 1 | **194-1938** | 1 | HARNESS AS-CONSOLE (SIDE) | |
| | | 1 | **102-8804** | 1 | KIT-RECEPTACLE (4 PIN) (SIDE) | |
| | | 1 | **155-2271** | 1 | KIT-CONNECTING PLUG (4 PIN) | |
| | | 1 | **155-2270** | 1 | KIT-CONNECTING PLUG (2 PIN) | |
| | 8 | 1 | **194-1940** | 1 | HARNESS AS-PLATFORM | |
| | | 1 | **102-8804** | 1 | KIT-RECEPTACLE (4 PIN) | |
| | | 1 | **102-8805** | 1 | KIT-RECEPTACLE (6 PIN) | |
| | 9 | 1 | **194-1941** | 1 | HARNESS AS-CONSOLE (FRONT) | |
| | | 1 | **155-2270** | 1 | KIT-CONNECTING PLUG (2 PIN) | |
| | | 1 | **155-2274** | 1 | KIT-CONNECTING PLUG (6 PIN) | |
| M | 10 | 1 | **138-8454** | 2 | SCREW-TRUSS HEAD (M4X0.7X10MM) | |
| | 11 | 1 | **4B-4863** | 2 | WASHER (4.7X11X1.2MM THK) | |

M-METRIC PART

*194-1950* **WIRING GP-CAB** *(contd.)* **i01937523**

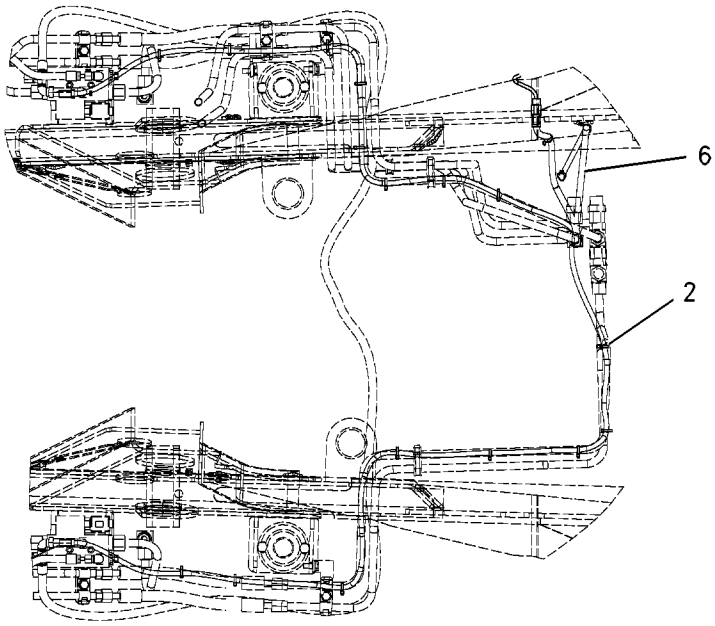


SECTION B-B

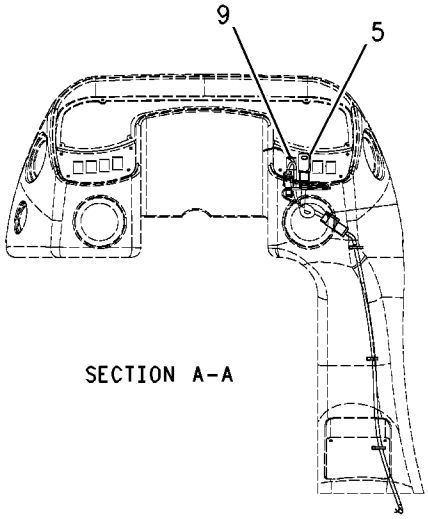


SECTION A-A

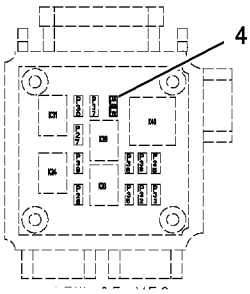


FUSE BOX

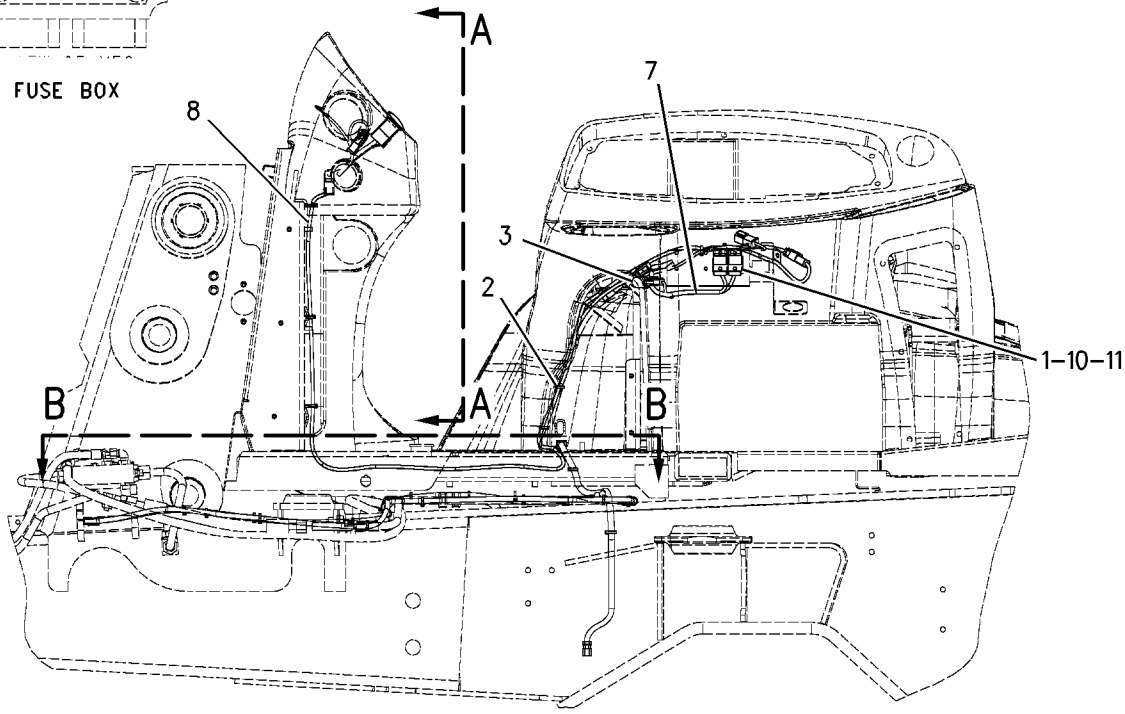


GRAPHIC #1 **<END>** g00774126

# *238-1165* WIRING GP-CONSOLE–FRONT

**S/N: BXC1-UP; DSX1-UP**

**PART OF 237-9288, 237-9289 CHASSIS AR**

**SMCS-1408** **i01982214**

| NOTE | REF NO | GRAPHIC REF | PART NUMBER | QTY | PART NAME 1 2 3 4 5 6 (PRODUCT LEVEL) | SEE PAGE |
|---|---|---|---|---|---|---|
| Y | 1 | 2 | **144-9931** | 1 | MODULE GP-WARNING INDICATOR (WITHOUT ALARM) | 753 |
| | 2 | 2 | **157-1997** | 2 | SPACER (4.34X15.88X6.34MM THK) | |
| | 3 | 2 | **167-3701** | 1 | HARNESS AS-CONSOLE | |
| | | 2 | **102-8805** | 1 | KIT-RECEPTACLE (6-PIN) | |
| | | 2 | **155-2255** | 1 | KIT-CONNECTING PLUG (12-PIN) | |
| | | 2 | **155-2265** | 1 | KIT-CONNECTING PLUG (8-PIN) | |
| | 4 | 2 | **169-0587** | 1 | SWITCH AS (HORN) | |
| | | 2 | **111-7899** | 1 | GASKET | |
| | 5 | 2 | **169-0588** | 1 | SWITCH AS (NEUTRAL LOCK) | |
| | | 2 | **111-7899** | 1 | GASKET | |
| | 6 | 2 | **187-1644** | 7 | PLUG | |
| | 7 | 2 | **205-7700** | 1 | KIT-SERVICE METER | |
| | | | | | INCLUDES FILM | |
| | 8 | 2 | **229-8182** | 1 | SWITCH AS-ROCKER (HAZARD) | |
| | | 2 | **111-7899** | 1 | GASKET | |
| M | 9 | 2 | **095-0741** | 2 | SCREW-MACHINE (M6X1THD) | |
| M | 10 | 2 | **099-0492** | 2 | LOCKNUT (M6X1 THD) | |
| | 11 | 2 | **116-7491** | 2 | ANCHOR | |
| | 12 | 2 | **188-0863** | 1 | FILM-INDICATOR (416D) | |
| | 13 | 2 | **3S-2093** | 6 | STRAP-CABLE | |
| M | 14 | 2 | **8T-2659** | 2 | LOCKNUT (M4X6H THD) | |

M-METRIC PART
Y-SEPARATE ILLUSTRATION

REFER TO ALL ILLUSTRATIONS OF THIS GROUP FOR AUXILIARY VIEWS

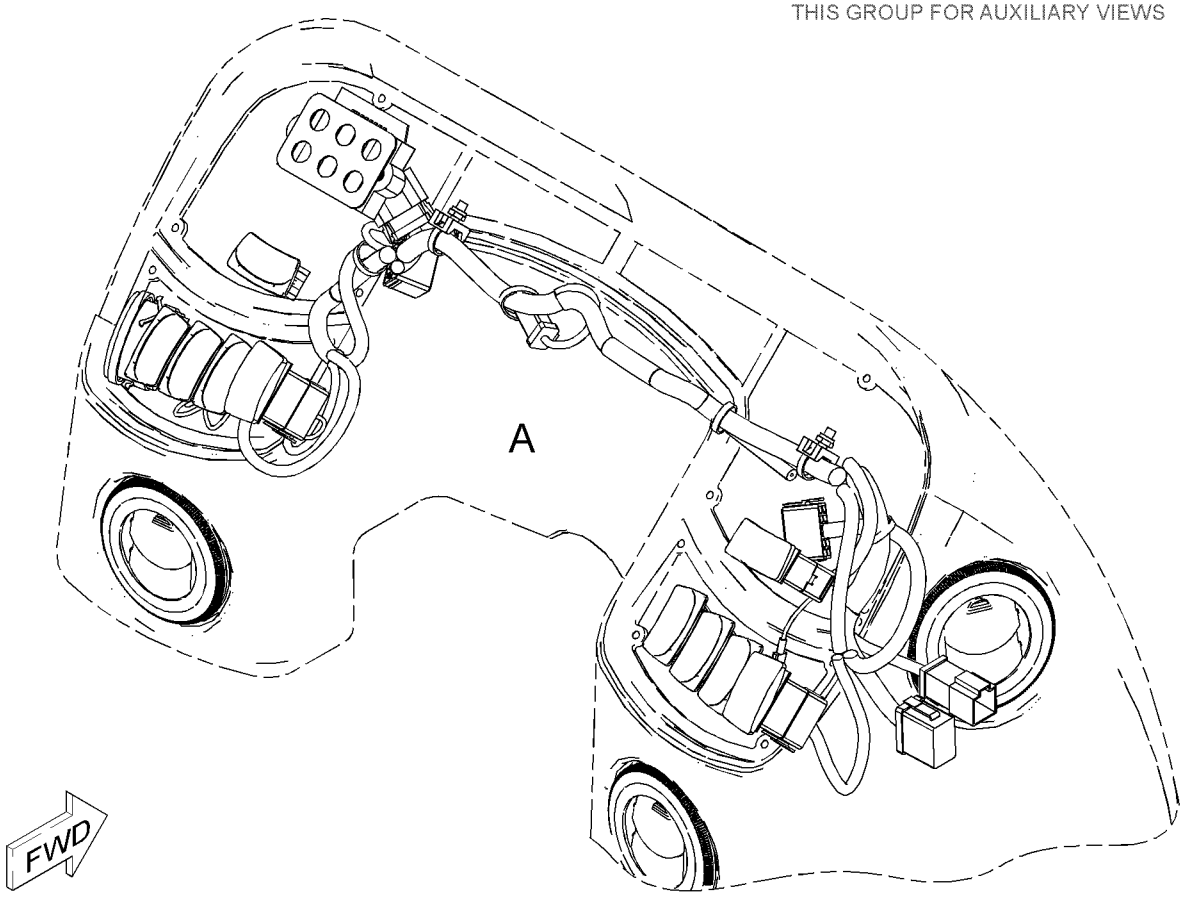


GRAPHIC #1 g01034859

*238-1165* **WIRING GP-CONSOLE** *(contd.)* **i01982214**

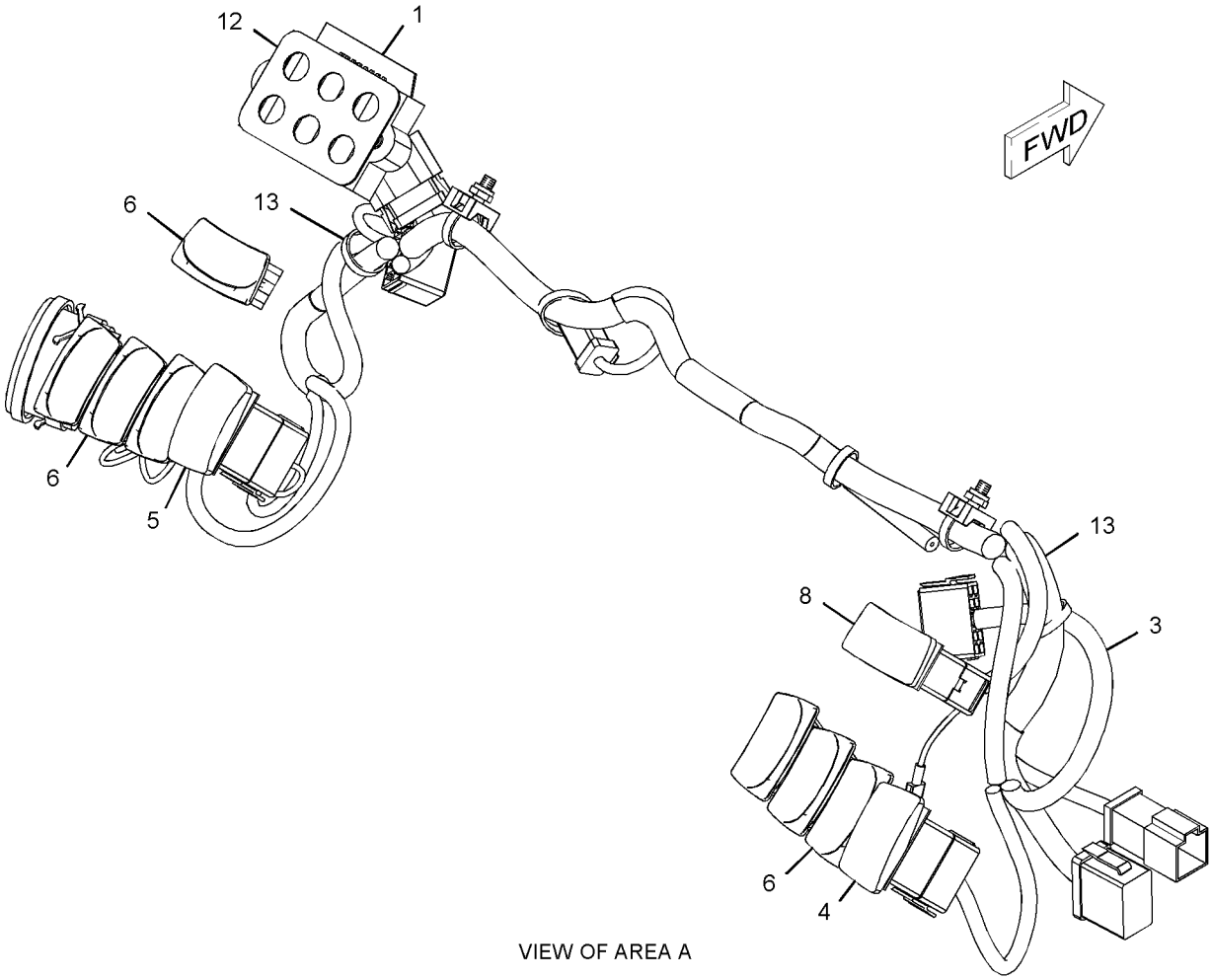


VIEW OF AREA A

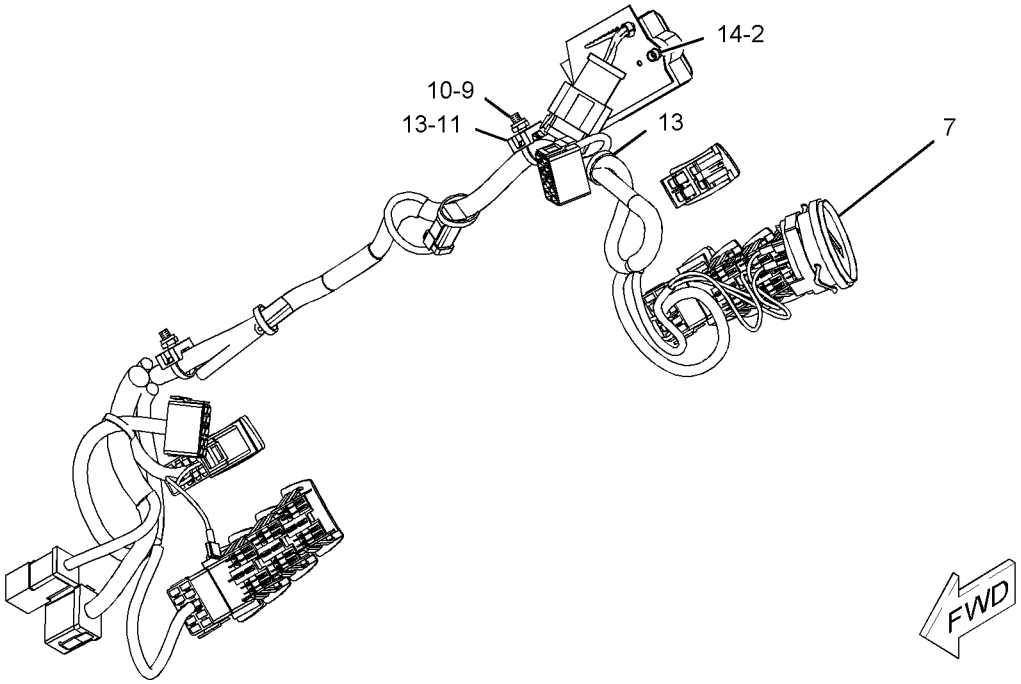


GRAPHIC #2 **<END>** g01034860

# ELECTRICAL AND STARTING SYSTEM

## *238-1166* WIRING GP-CONSOLE—SIDE

**S/N: BXC1-UP; DSX1-UP**
**PART OF 214-7006, 214-7007 CAB AR, 214-7004 CANOPY AR**
**AN ATTACHMENT**

**SMCS-1408** **i02005280**

| NOTE | REF NO | GRAPHIC REF | PART NUMBER | QTY | PART NAME 1 2 3 4 5 6 (PRODUCT LEVEL) | SEE PAGE |
|---|---|---|---|---|---|---|
| | 1 | 1 | **6K-0806** | 4 | STRAP-CABLE | |
| | 2 | 1 | **7K-1181** | 3 | STRAP-CABLE | |
| | 3 | 1 | **157-1997** | 2 | SPACER (4.34X15.88X6.34MM THK) | |
| | 4 | 1 | **169-0586** | 1 | SWITCH AS-ROCKER (STARTING AID) | |
| | | 1 | **111-7899** | 1 | GASKET | |
| | 5 | 1 | **172-9200** | 1 | SUPPRESSOR-ARC | |
| | 6 | 1 | **184-5293** | 1 | PLUG | |
| | 7 | 1 | **187-1644** | 6 | PLUG | |
| | 8 | 1 | **205-4286** | 1 | HARNESS AS-INSTRUMENT PANEL | |
| | | 1 | **102-8803** | 1 | KIT-RECEPTACLE (3-PIN) | |
| | | | | | (INCLUDES RECEPTACLE AND WEDGE) | |
| | | 1 | **102-8804** | 1 | KIT-RECEPTACLE (4-PIN) | |
| | | | | | (INCLUDES RECEPTACLE AND WEDGE) | |
| | | 1 | **155-2255** | 1 | KIT-CONNECTING PLUG (12-PIN) | |
| | | | | | (INCLUDES PLUG AND WEDGE) | |
| | | 1 | **155-2260** | 1 | KIT-CONNECTING PLUG (3-PIN) | |
| | | | | | (INCLUDES PLUG AND WEDGE) | |
| | | 1 | **155-2270** | 1 | KIT-CONNECTING PLUG (2-PIN) | |
| | | | | | (INCLUDES PLUG AND WEDGE) | |
| | | 1 | **155-2271** | 2 | KIT-CONNECTING PLUG (4-PIN) | |
| | | | | | (EACH INCLUDES PLUG AND WEDGE) | |
| | | 1 | **155-2274** | 2 | KIT-CONNECTING PLUG (6-PIN) | |
| | | | | | (EACH INCLUDES PLUG AND WEDGE) | |
| | 9 | 1 | **222-5794** | 1 | FILM-INDICATOR | |
| Y | 10 | 1 | *223-6539* | 1 | MODULE GP-WARNING INDICATOR | 754 |
| | 11 | 1 | **226-7164** | 1 | GAUGE GP-COOLANT TEMPERATURE | |
| | | 1 | **4B-2043** | 3 | NUT (8-32 THD) | |
| | | 1 | **7X-9065** | 1 | LAMP (12-VOLT) | |
| | | 1 | **9B-7233** | 3 | LOCKWASHER | |
| M | 12 | 1 | **095-0741** | 1 | SCREW-MACHINE (M6X1THD) | |
| | 13 | 1 | **116-7491** | 1 | ANCHOR | |
| | 14 | 1 | **134-2305** | 3 | SEAL | |
| | 15 | 1 | **170-6305** | 1 | INDICATOR AS (FUEL LEVEL) | |
| | | 1 | **4B-2043** | 3 | NUT (8-32 THD) | |
| | | 1 | **7X-9065** | 1 | LAMP (12-VOLT) | |
| | | 1 | **9B-7233** | 3 | LOCKWASHER | |
| | 16 | 1 | **170-6542** | 1 | INDICATOR AS (CONVERTER OIL TEMP) | |
| | | 1 | **4B-2043** | 3 | NUT (8-32 THD) | |
| | | 1 | **7X-9065** | 1 | LAMP (12-VOLT) | |
| | | 1 | **9B-7233** | 3 | LOCKWASHER | |
| | 17 | 1 | **196-2966** | 1 | PLUG | |
| | 18 | 1 | **3S-2093** | 11 | STRAP-CABLE | |
| | 19 | 1 | **4P-8134** | 3 | CLIP | |
| M | 20 | 1 | **8T-2659** | 2 | LOCKNUT (M4X6H THD) | |
| M | 21 | 1 | **8T-4133** | 3 | NUT (M10X1.5 THD) | |
| M | 22 | 1 | **8T-4191** | 3 | BOLT (M10X1.5X16MM) | |

M-METRIC PART
Y-SEPARATE ILLUSTRATION

*238-1166* **WIRING GP-CONSOLE** *(contd.)* **i02005280**

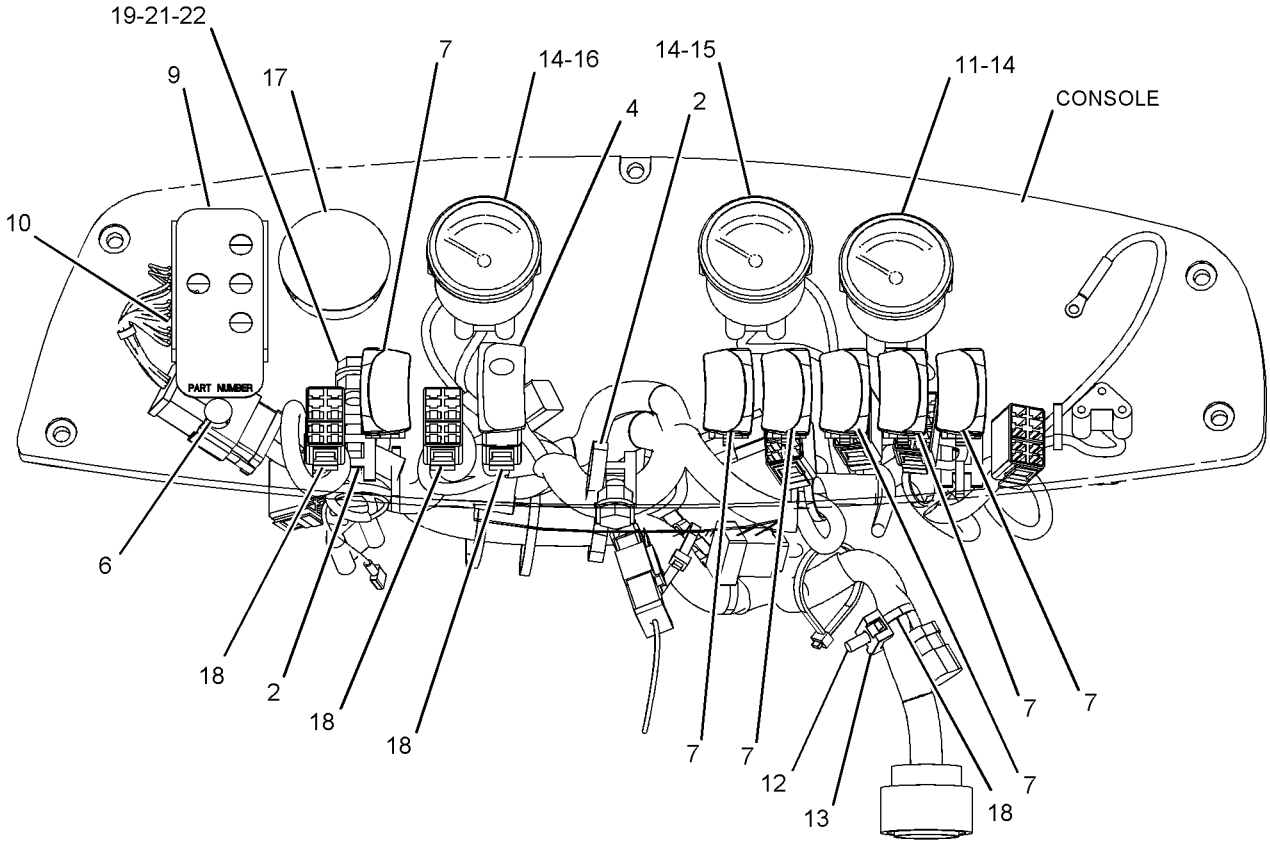


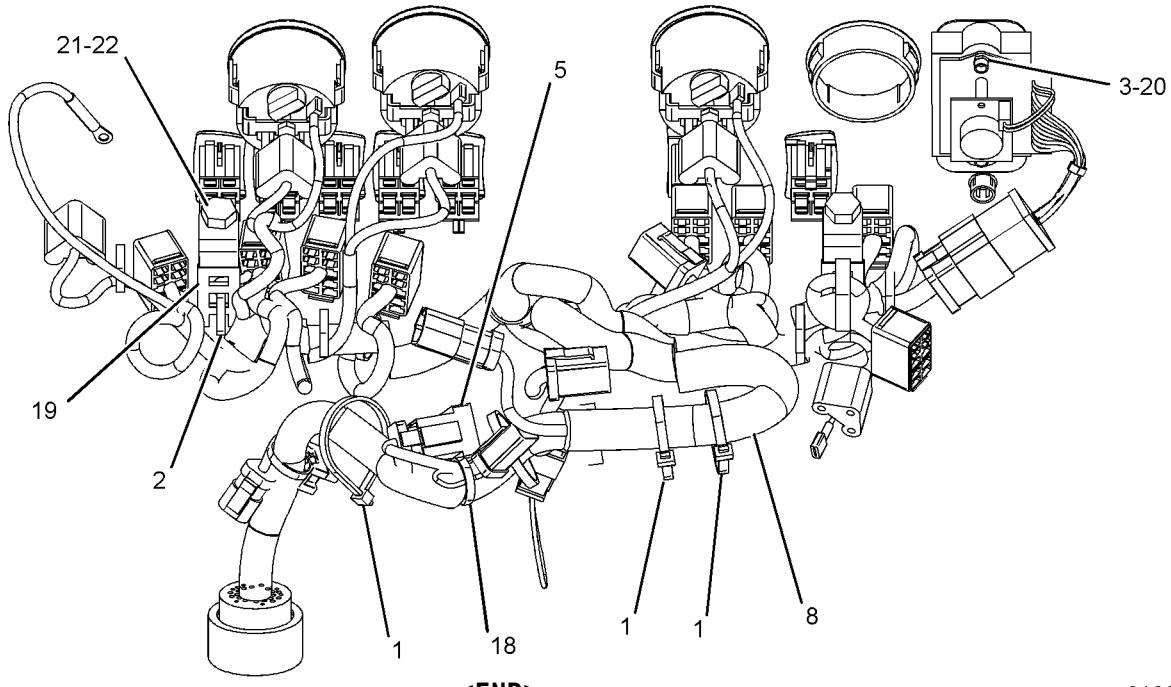


GRAPHIC #1 **<END>** g01026150

# ELECTRICAL AND STARTING SYSTEM

## *238-1167* WIRING GP-CONSOLE—SIDE, DELUXE

**S/N: BXC1-UP; DSX1-UP**
**PART OF 214-7008, 214-7009 CAB AR-ENCLOSED ROPS**
**AN ATTACHMENT**

**SMCS-1408** **i02000627**

| NOTE | REF NO | GRAPHIC REF | PART NUMBER | QTY | PART NAME 1 2 3 4 5 6 (PRODUCT LEVEL) | SEE PAGE |
|---|---|---|---|---|---|---|
| | 1 | 1 | **6K-0806** | 4 | STRAP-CABLE | |
| | 2 | 1 | **7K-1181** | 1 | STRAP-CABLE | |
| | 3 | 1 | **134-0404** | 1 | INDICATOR AS | |
| | 4 | 1 | **157-1997** | 2 | SPACER (4.34X15.88X6.34MM THK) | |
| | 5 | 1 | **169-0586** | 1 | SWITCH AS-ROCKER (STARTING AID) | |
| | | 1 | **111-7899** | 1 | GASKET | |
| | 6 | 1 | **172-9200** | 1 | SUPPRESSOR-ARC | |
| | 7 | 1 | **184-5293** | 1 | PLUG | |
| | 8 | 1 | **187-1644** | 6 | PLUG | |
| | 9 | 1 | **189-0148** | 1 | MODULE GP-WARNING INDICATOR | |
| | 10 | 1 | **226-7164** | 1 | GAUGE GP-COOLANT TEMPERATURE | |
| | | 1 | **4B-2043** | 6 | NUT (8-32 THD) | |
| | | 1 | **7X-9065** | 1 | LAMP (12-VOLT) (COOLANT TEMPERATURE GAUGE) | |
| | | 1 | **9B-7233** | 3 | LOCKWASHER | |
| M | 11 | 1 | **095-0741** | 1 | SCREW-MACHINE (M6X1THD) | |
| | 12 | 1 | **116-7491** | 1 | ANCHOR | |
| | 13 | 1 | **134-2305** | 4 | SEAL | |
| | 14 | 1 | **170-6305** | 1 | INDICATOR AS (FUEL LEVEL) | |
| | | 1 | **4B-2043** | 3 | NUT (8-32 THD) | |
| | | 1 | **7X-9065** | 1 | LAMP (12-VOLT) (FUEL LEVEL) | |
| | | 1 | **9B-7233** | 3 | LOCKWASHER | |
| | 15 | 1 | **170-6309** | 1 | INDICATOR AS (VOLT METER) | |
| | | 1 | **4B-2043** | 3 | NUT (8-32 THD) | |
| | | 1 | **7X-9065** | 1 | LAMP (12-VOLT) (VOLT METER) | |
| | | 1 | **9B-7233** | 3 | LOCKWASHER | |
| | 16 | 1 | **170-6542** | 1 | INDICATOR AS (CONVERTER OIL TEMP) | |
| | | 1 | **4B-2043** | 3 | NUT (8-32 THD) | |
| | | 1 | **7X-9065** | 1 | LAMP (12-VOLT) (CONVERTER OIL TEMP) | |
| | | 1 | **9B-7233** | 3 | LOCKWASHER | |
| | 17 | 1 | **172-6224** | 1 | FILM-INDICATOR | |
| | 18 | 1 | **205-4286** | 1 | HARNESS AS-CONSOLE | |
| | | 1 | **102-8803** | 1 | KIT-RECEPTACLE (3-PIN) | |
| | | 1 | **102-8804** | 1 | KIT-RECEPTACLE (4-PIN) | |
| | | 1 | **155-2255** | 1 | KIT-CONNECTING PLUG (12-PIN) | |
| | | 1 | **155-2260** | 1 | KIT-CONNECTING PLUG (3-PIN) | |
| | | 1 | **155-2270** | 2 | KIT-CONNECTING PLUG (2-PIN) | |
| | | 1 | **155-2274** | 2 | KIT-CONNECTING PLUG (6-PIN) | |
| B | 19 | 1 | **3S-2093** | 14 | STRAP-CABLE | |
| M | 20 | 1 | **8T-2659** | 2 | LOCKNUT (M4X6H THD) | |

B-USE AS REQUIRED
M-METRIC PART

*238-1167* **WIRING GP-CONSOLE** *(contd.)* **i02000627**

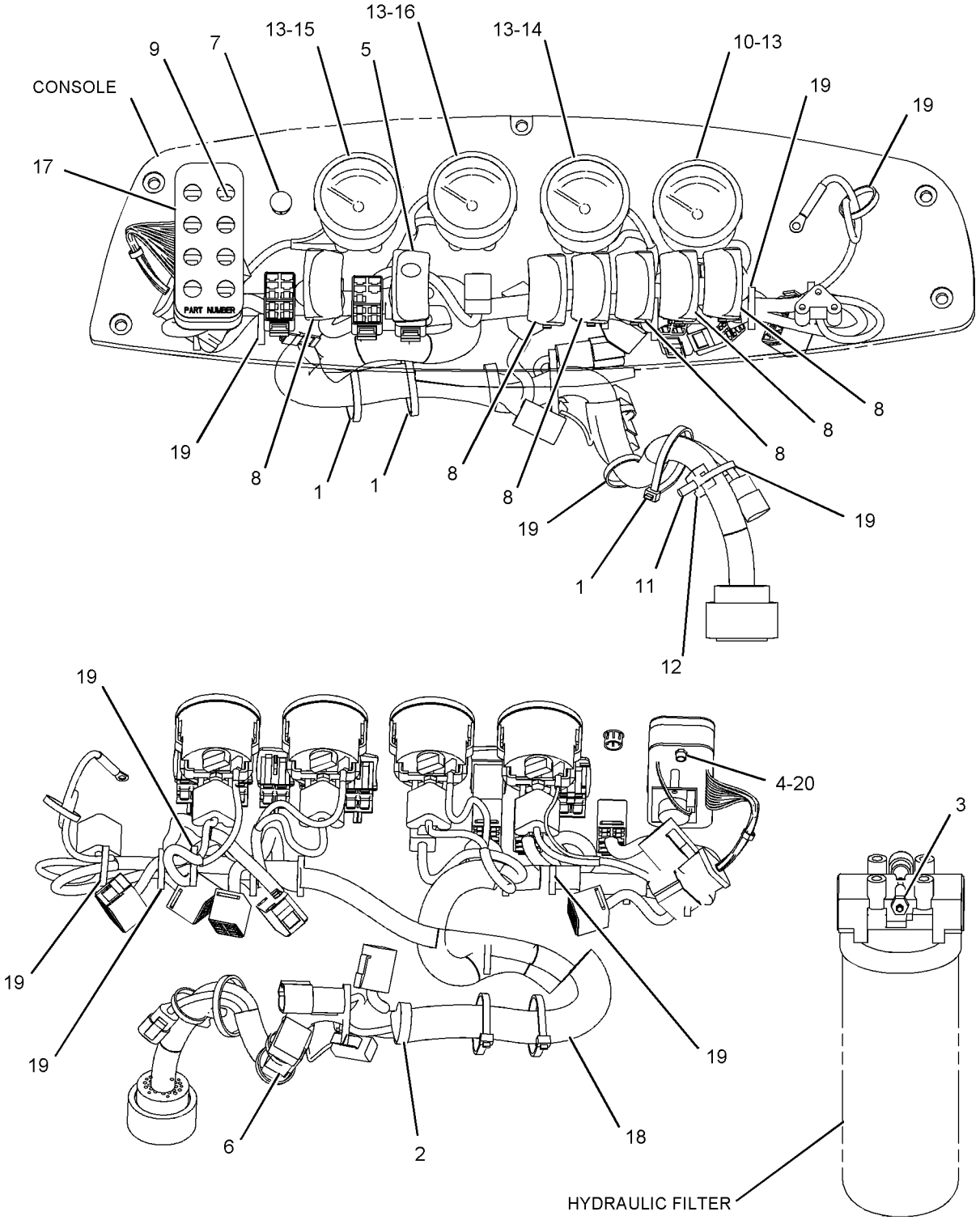


GRAPHIC #1 **<END>** g01037139

# ELECTRICAL AND STARTING SYSTEM

## *234-1991* WIRING GP-ENGINE

**S/N: BXC1-UP; DSX1-UP**
**PART OF 214-6891, 214-6893 ENGINE AR**
**AN ATTACHMENT**

**SMCS-1408** **i01991950**

| NOTE | REF NO | GRAPHIC REF | PART NUMBER | QTY | PART NAME 1 2 3 4 5 6 (PRODUCT LEVEL) | SEE PAGE |
|---|---|---|---|---|---|---|
| | 1 | 1 | **4W-9972** | 1 | SENDER-TEMPERATURE | |
| | | 1 | **4B-2049** | 1 | NUT (10-32 THD) | |
| | | 1 | **8F-1434** | 1 | LOCKWASHER (INTERNAL TOOTH) | |
| | | 1 | **8T-0328** | 1 | WASHER-HARD (5.5X10X1MM THK) | |
| | 2 | 1,2 | **7K-1181** | 2 | STRAP-CABLE | |
| B | 3 | 1 | **8T-8737** | 7 | PLUG-SEAL | |
| | 4 | 1,2 | **115-1615** | 2 | RELAY AS (12-VOLT) | |
| | 5 | 1 | **155-8522** | 1 | MOUNT | |
| | 6 | 2 | **164-9425** | 1 | HORN AS (LOW TONE) | |
| | 7 | 2 | **178-8465** | 1 | HARNESS AS (WIRE) | |
| | | 2 | **102-8802** | 1 | KIT-RECEPTACLE (2-PIN) | |
| | | | | | (INCLUDES RECEPTACLE AS AND WEDGE) | |
| | | 2 | **100-3320** | 1 | PLUG AS-CONNECTOR (2 PIN) | |
| | 8 | 2 | **213-6094** | 1 | CABLE AS | |
| E | | 2 | **8C-3056** | | CABLE (2 GA) (85CM) | |
| | | 2 | **8T-8799** | 1 | BOOT | |
| E | | 2 | **119-3662** | | TUBE-HEAT SHRINK (7CM) | |
| | 9 | 2 | **234-1992** | 1 | HARNESS AS-ENGINE | |
| | | 2 | **102-8802** | 1 | KIT-RECEPTACLE (2-PIN) | |
| | | | | | (INCLUDES RECEPTACLE AS AND WEDGE) | |
| | | 2 | **9X-1054** | 2 | PLUG AS-CONNECTOR (4 PIN) | |
| | | 2 | **155-2260** | 3 | KIT-CONNECTING PLUG (3-PIN) | |
| | | | | | (INCLUDES PLUG AS AND WEDGE) | |
| | | 2 | **155-2270** | 12 | KIT-CONNECTING PLUG (2-PIN) | |
| | | 2 | **167-3693** | 1 | PLUG AS | |
| | | 2 | **177-9645** | 1 | KIT-RECEPTACLE (2-PIN) | |
| | | | | | (INCLUDES RECEPTACLE AS AND WEDGE) | |
| | 10 | 1 | **238-9397** | 1 | RESISTOR AS | |
| | 11 | 2 | **243-5027** | 1 | NUT AS | |
| | 12 | 2 | **244-3106** | 1 | SENDER AS-TEMPERATURE | |
| | | 2 | **102-8802** | 1 | KIT-RECEPTACLE (2-PIN) | |
| | | | | | (INCLUDES RECEPTACLE AS AND WEDGE) | |
| | | 2 | **186-3735** | 2 | PIN-CONNECTOR | |
| | 13 | 1 | **155-2270** | 1 | KIT-CONNECTING PLUG (2-PIN) | |
| | | | | | (INCLUDES PLUG AS AND WEDGE) | |
| | 14 | 1 | **102-8802** | 1 | KIT-RECEPTACLE (2-PIN) | |
| | 15 | 1 | **102-8803** | 1 | KIT-RECEPTACLE (3-PIN) | |
| | | | | | (BOTH INCLUDE RECEPTACLE AS AND WEDGE) | |
| | 16 | 1 | **3J-1907** | 1 | SEAL-O-RING | |
| | 17 | 1,2 | **3S-2093** | 32 | STRAP-CABLE | |
| | 18 | 2 | **4P-7581** | 8 | CLIP | |
| | 19 | 2 | **4P-8134** | 5 | CLIP | |
| M | 20 | 2 | **5C-2874** | 2 | NUT (M5X.8 THD) | |
| M | 21 | 1 | **5C-2890** | 1 | NUT (M6X1 THD) | |
| | 22 | 1 | **6K-0806** | 3 | STRAP-CABLE | |
| M | 23 | 1 | **6V-7357** | 1 | BOLT (M6X1.0X25MM) | |
| | 24 | 2 | **8F-1434** | 2 | LOCKWASHER (INTERNAL TOOTH) | |
| | 25 | 2 | **8T-0328** | 2 | WASHER-HARD (5.5X10X1MM THK) | |
| | 26 | 2 | **8T-4121** | 9 | WASHER-HARD (11X21X2.5MM THK) | |
| M | 27 | 2 | **8T-4136** | 1 | BOLT (M10X1.5X25MM) | |
| M | 28 | 2 | **8T-4137** | 8 | BOLT (M10X1.5X20MM) | |
| M | 29 | 2 | **8T-4138** | 1 | BOLT (M6X1X20MM) | |
| M | 30 | 2 | **8T-4189** | 1 | BOLT (M8X1.25X20MM) | |
| | 31 | 1,2 | **8T-4205** | 3 | WASHER-HARD (7.2X14.5X2MM THK) | |
| | 32 | 2 | **8T-4224** | 1 | WASHER-HARD (8.8X16X2MM THK) | |

*234-1991* **WIRING GP-ENGINE** ***(contd.)*** **i01991950**

B-USE AS REQUIRED
E-ORDER BY THE CENTIMETER
M-METRIC PART

*234-1991* **WIRING GP-ENGINE** *(contd.)* **i01991950**

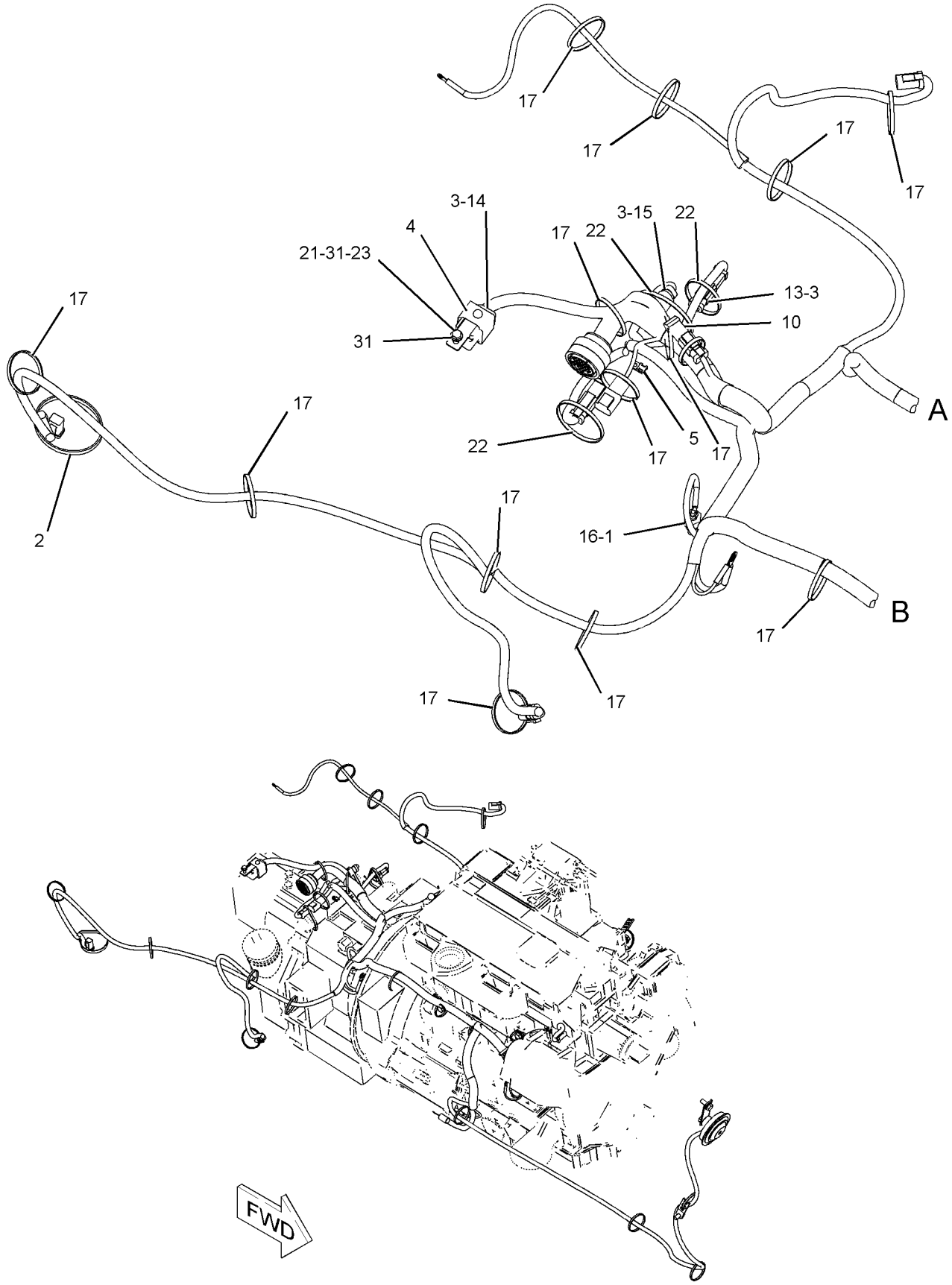


GRAPHIC #1 g01039490

*234-1991* **WIRING GP-ENGINE** *(contd.)* **i01991950**

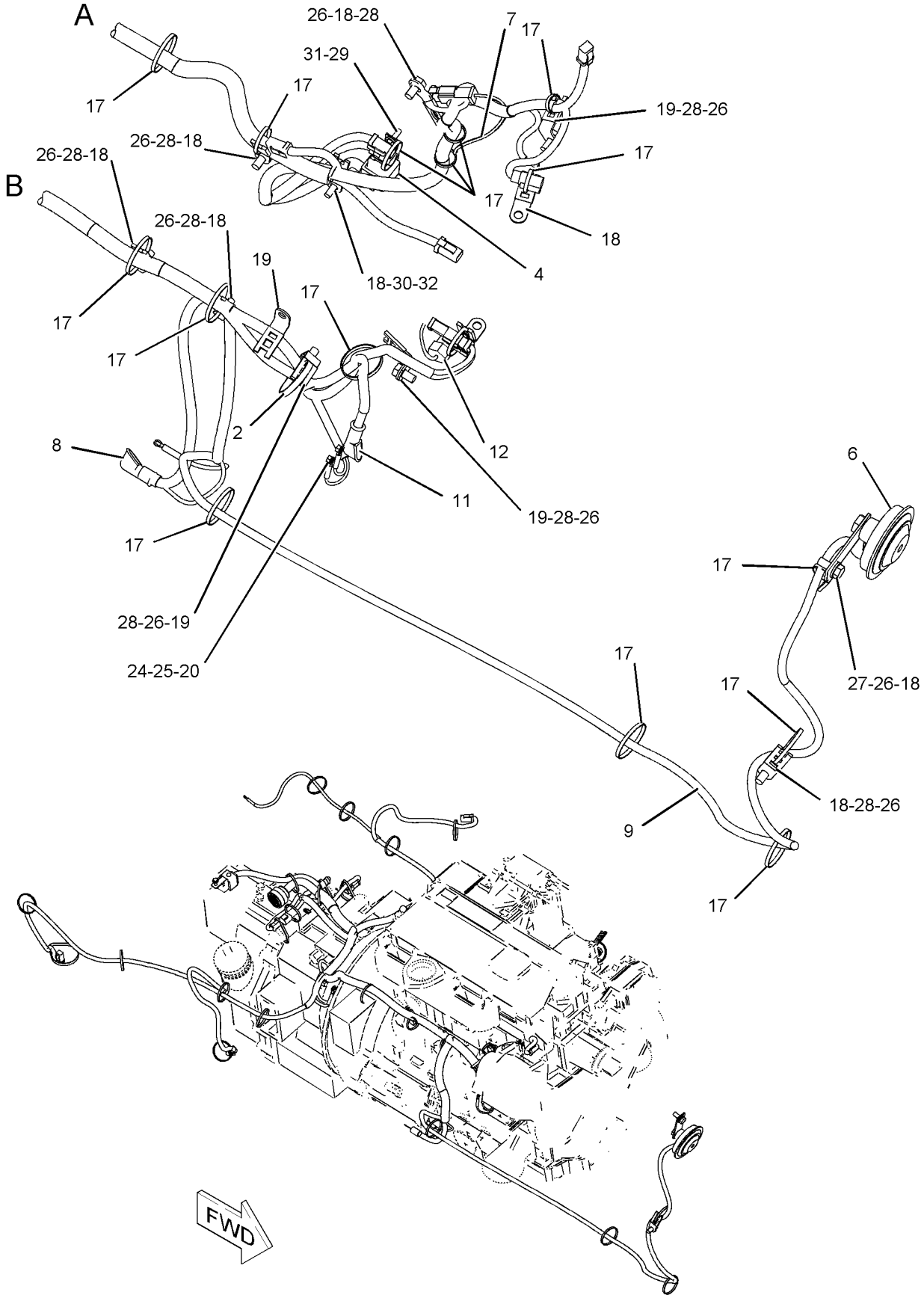


GRAPHIC #2 **<END>** g01039491

# ELECTRICAL AND STARTING SYSTEM

## *186-2731* WIRING GP-HEATER

**S/N: BXC1-UP; DSX1-UP**
**PART OF 214-7006 CAB AR, 214-7008 CAB AR-ENCLOSED ROPS**
**AN ATTACHMENT**

**SMCS-1408, 7304** **i02000069**

| NOTE | REF NO | GRAPHIC REF | PART NUMBER | QTY | PART NAME 1 2 3 4 5 6 (PRODUCT LEVEL) | SEE PAGE |
|---|---|---|---|---|---|---|
| | 1 | 1 | **3E-9362** | 1 | RELAY AS (12 VOLT) | |
| | 2 | 1 | **3S-2093** | 3 | STRAP-CABLE | |
| | 3 | 1 | **131-3201** | 2 | BOOT | |
| | 4 | 1 | **169-0605** | 1 | SWITCH AS-ROCKER (HEATER FAN SPEED) | |
| | | 1 | **111-7899** | 1 | GASKET | |
| | 5 | 1 | **170-2237** | 1 | RELAY AS (12 VOLT) (HEATER & AIR COND) | |
| C | 6 | 1 | **229-8377** | 1 | CIRCUIT BREAKER AS (35AMP) (FAN BLOWER) | |
| | | 1 | **6V-8378** | 2 | NUT (10-32 THD) | |
| | | 1 | **8F-1434** | 2 | LOCKWASHER (INTERNAL TOOTH) | |
| | | 1 | **8T-0328** | 2 | WASHER-HARD (5.5X10X1MM THK) | |
| | 7 | 1 | **184-2422** | 1 | SWITCH AS (HEATER) | |
| | | 1 | **111-7899** | 1 | GASKET | |
| C | 8 | 1 | **229-8413** | 1 | HARNESS AS-HEATER & AIR COND | |
| | | 1 | **102-8802** | 1 | KIT-RECEPTACLE (2-PIN) | |
| | | 1 | **102-8804** | 1 | KIT-RECEPTACLE (4-PIN) | |
| | | 1 | **155-2270** | 1 | KIT-CONNECTING PLUG (2-PIN) | |
| | | 1 | **177-9645** | 1 | KIT-RECEPTACLE (2-PIN) | |
| | | 1 | **177-9648** | 1 | KIT-CONNECTING PLUG (2-PIN) | |
| M | 9 | 1 | **138-8454** | 1 | SCREW-TRUSS HEAD (M4X0.7X10MM) | |
| | 10 | 1 | **4B-4863** | 1 | WASHER (4.7X11X1.2MM THK) | |
| | 11 | 1 | **213-7315** | 2 | SCREW-TRUSS HEAD (M4X0.7X25MM) | |

C-CHANGE FROM PREVIOUS TYPE
M-METRIC PART

*186-2731* **WIRING GP-HEATER** *(contd.)* **i02000069**

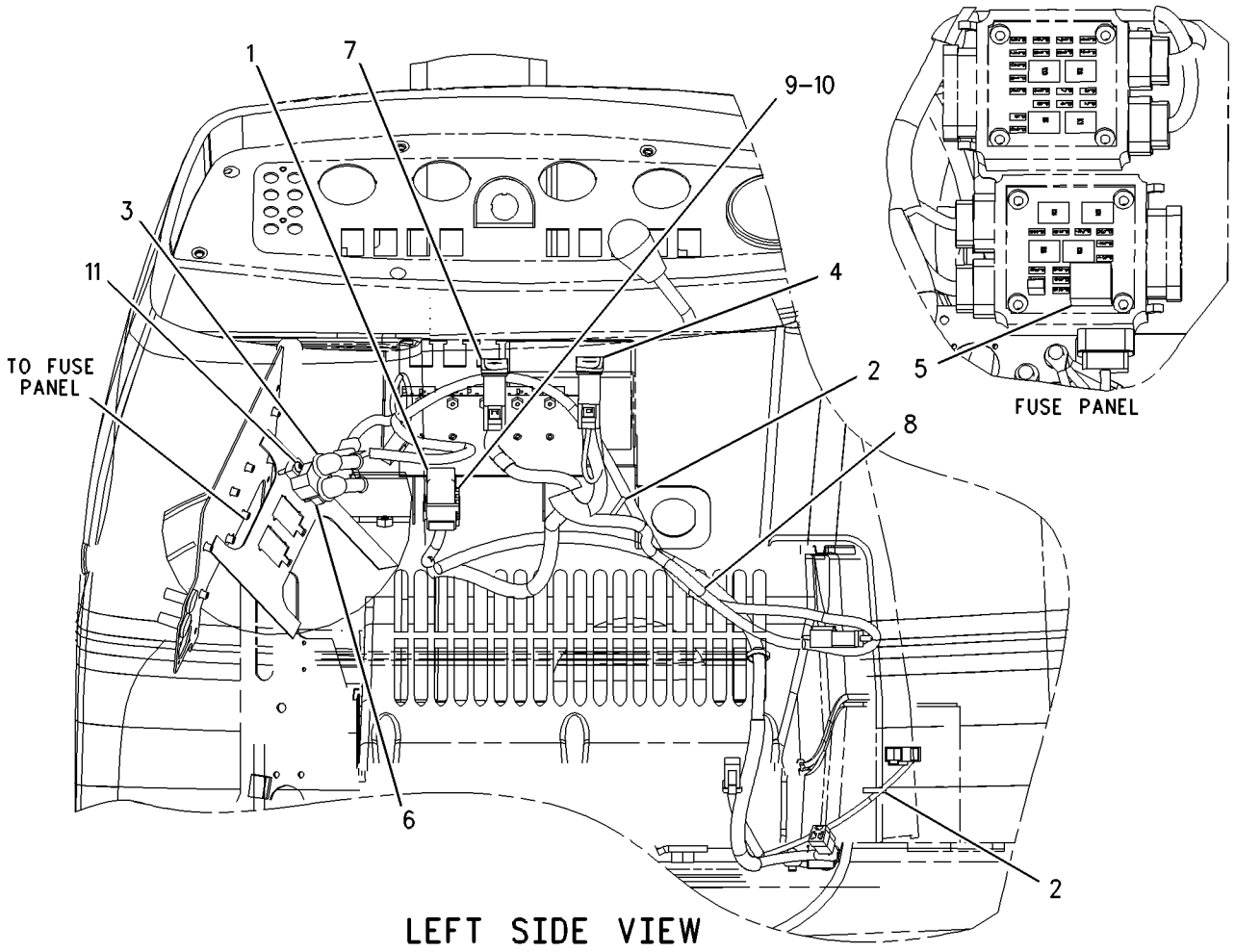


GRAPHIC #1 **<END>** g00931489

# ELECTRICAL AND STARTING SYSTEM

## *122-1644* WIRING GP-KICKOUT & POSITIONER

**S/N: BXC1-UP; DSX1-UP**
**PART OF 112-1827 LOADER AR**
**ALSO AN ATTACHMENT**

**SMCS-5109, 5112, 5734** **i02000066**

| NOTE | REF NO | GRAPHIC REF | PART NUMBER | QTY | PART NAME 1 2 3 4 5 6 (PRODUCT LEVEL) | SEE PAGE |
|---|---|---|---|---|---|---|
| Y | 1 | 1 | **3E-7843** | 1 | CONTROL GP-POSITION | 112 |
| | 2 | 1 | **5G-7820** | 1 | MAGNET AS | |
| | 3 | 1 | **8T-4985** | 2 | CLAMP-HOSE (M8X1.25X25MM) | |
| | 4 | 1 | **122-1647** | 1 | BRACKET AS | |
| | 5 | 1 | **122-1648** | 1 | HARNESS AS-CONTROL (BUCKET POSITIONER) (BUCKET) | |
| | | 1 | **102-8803** | 2 | KIT-RECEPTACLE (3-PIN) | |
| B | 6 | 1 | **163-6290** | 2 | PLATE | |
| M | 7 | 1 | **8T-4199** | 2 | BOLT (M8X1.25X12MM) | |
| | 8 | 1 | **8T-4224** | 2 | WASHER-HARD (8.8X16X2MM THK) | |
| M | 9 | 1 | **8T-4908** | 2 | BOLT (M8X1.25X25MM) | |
| B | 10 | 1 | **3S-2093** | 14 | STRAP-CABLE | |

B-USE AS REQUIRED
M-METRIC PART
Y-SEPARATE ILLUSTRATION

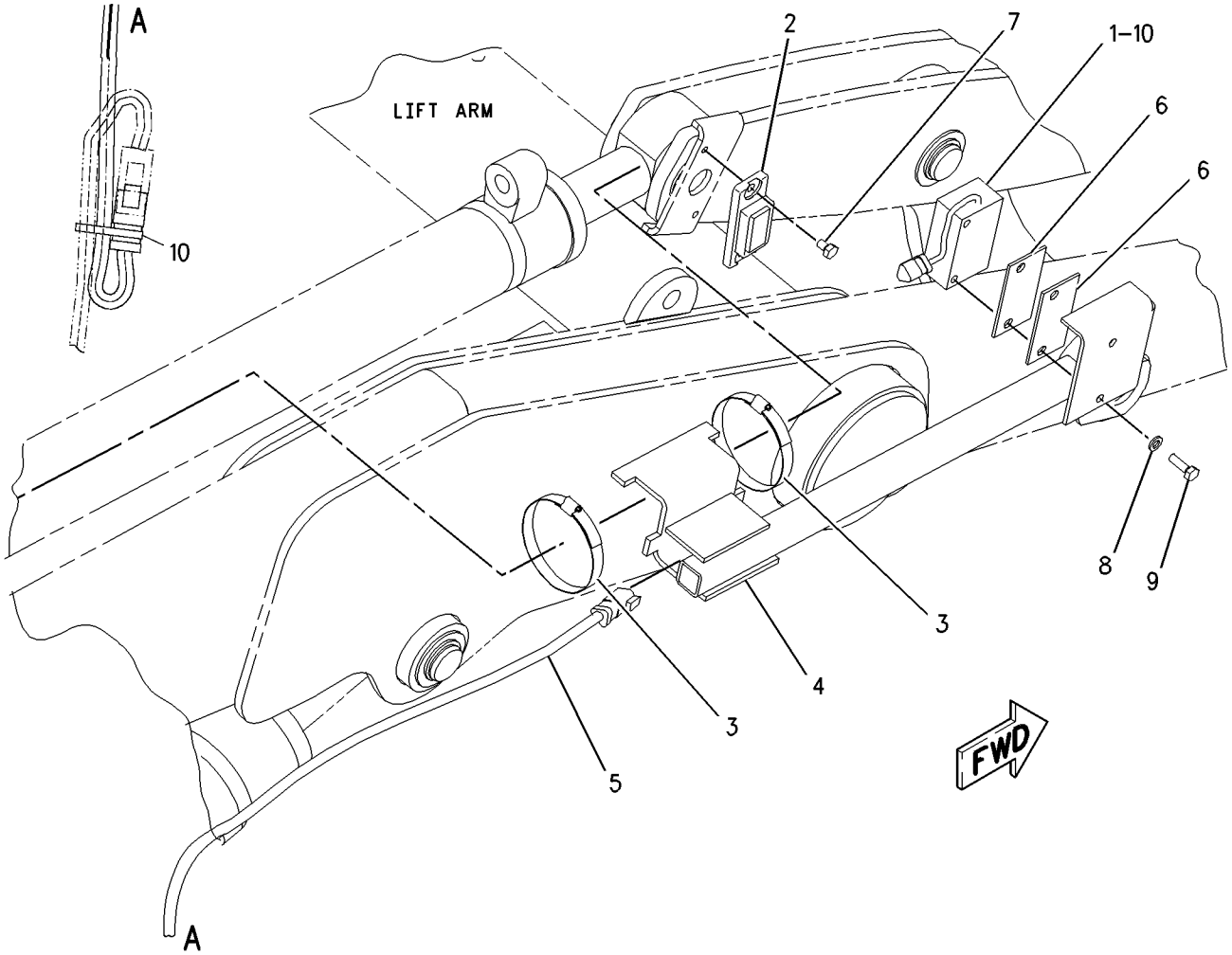


GRAPHIC #1 **<END>** g00656249

# *186-0304* WIRING GP-PLATFORM–SERVICE

**S/N: BXC1-UP; DSX1-UP**
**PART OF 186-0310 INSTALLATION GP-SECURITY**
**AN ATTACHMENT**

**SMCS-1408** **i01781083**

| NOTE | REF NO | GRAPHIC REF | PART NUMBER | QTY | PART NAME 1 2 3 4 5 6 (PRODUCT LEVEL) | SEE PAGE |
|---|---|---|---|---|---|---|
| | 1 | 1 | **3S-2093** | 4 | STRAP-CABLE | |
| | 2 | 1 | **4I-3038** | 4 | WASHER (3.3X8X0.5MM THK) | |
| | 3 | 1 | **183-7581** | 1 | HARNESS AS-PLATFORM | |
| | | 1 | **102-8802** | 1 | KIT-RECEPTACLE (2 PIN) | |
| | 4 | 1 | **224-6193** | 4 | BOLT-SOCKET HEAD | |
| M | 5 | 1 | **8T-2658** | 4 | LOCKNUT (M3X0.5 THD) | |

M-METRIC PART

*186-0304* **WIRING GP-PLATFORM** *(contd.)* **i01781083**

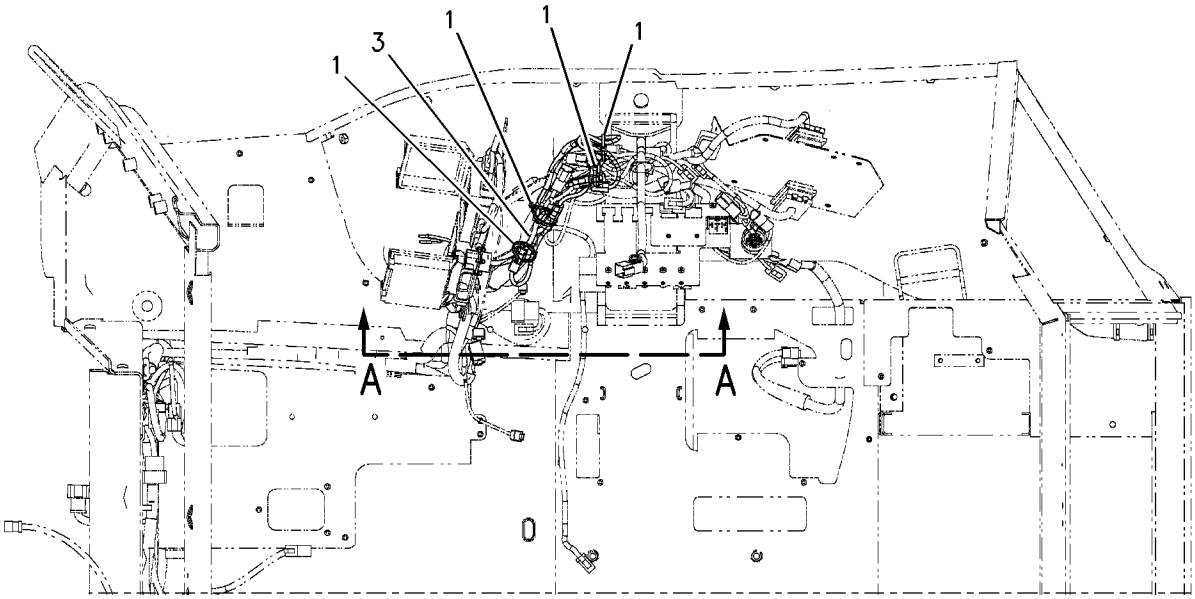


TOP VIEW

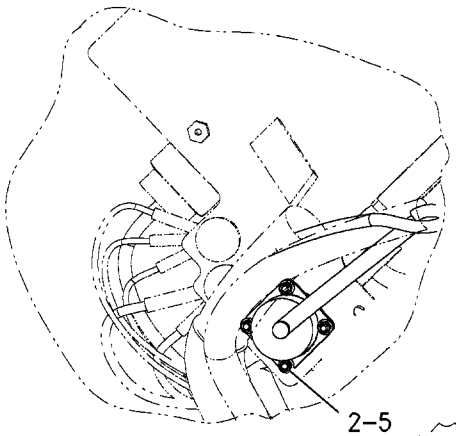


SECTION C-C

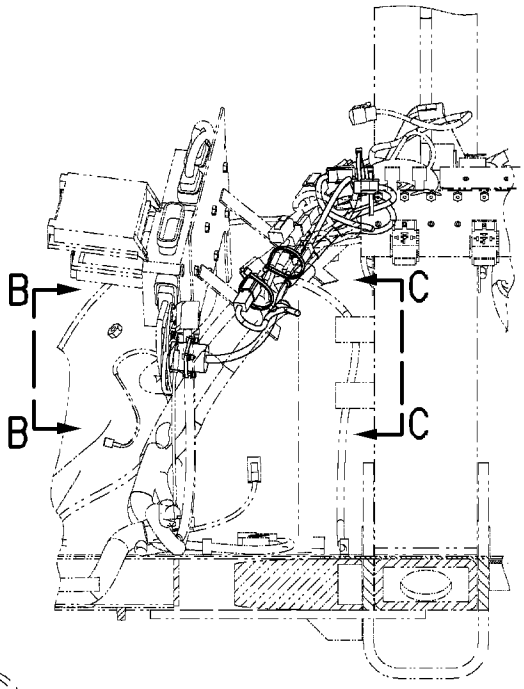


SECTION A-A

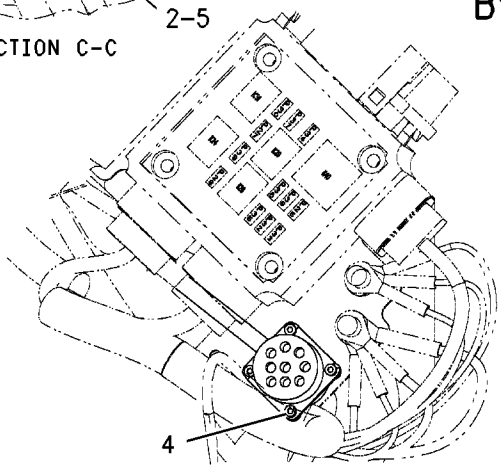


SECTION B-B

GRAPHIC #1 **<END>** g00743623

# ELECTRICAL AND STARTING SYSTEM

## *242-8521* WIRING GP-PLATFORM

**S/N: BXC1-UP; DSX1-UP**

**PART OF 237-9288, 237-9289 CHASSIS AR**

**SMCS-1408** **i01993843**

| NOTE | REF NO | GRAPHIC REF | PART NUMBER | QTY | PART NAME 1 2 3 4 5 6 (PRODUCT LEVEL) | SEE PAGE |
|---|---|---|---|---|---|---|
| D | 1 | 2 | **5P-5923** | | SEAL (.035M) | |
| D | 2 | 2 | **5P-7657** | 3 | SEAL (.032M EA) | |
| | 3 | 1 | **6K-0806** | 8 | STRAP-CABLE | |
| | 4 | 2 | **7G-1060** | 1 | STRAP AS-GROUND | |
| | 5 | 1 | **7T-4848** | 1 | FLASHER AS | |
| | 6 | 2 | **7Y-3883** | 1 | CABLE AS | |
| | | 2 | **1S-7251** | 2 | TERMINAL-RING (FOR 1/2IN BOLT) | |
| B | 7 | 1 | **8T-8737** | 15 | PLUG-SEAL | |
| | 8 | 1 | **128-4249** | 2 | LOCKWASHER | |
| | 9 | 2 | **164-1056** | 1 | CHANNEL | |
| | 10 | 1 | **167-3700** | 1 | HARNESS AS-PLATFORM | |
| | | 1 | **102-8802** | 1 | KIT-RECEPTACLE (2-PIN) | |
| | | | | | (KIT INCLUDES RECEPTACLE AS. & WEDGE) | |
| | | 1 | **102-8803** | 1 | KIT-RECEPTACLE (3-PIN) | |
| | | | | | (KIT INCLUDES RECEPTACLE AS. & WEDGE) | |
| | | 1 | **102-8804** | 1 | KIT-RECEPTACLE (4-PIN) | |
| | | | | | (KIT INCLUDES RECEPTACLE AS. & WEDGE) | |
| | | 1 | **102-8805** | 1 | KIT-RECEPTACLE (6-PIN) | |
| | | | | | (KIT INCLUDES RECEPTACLE AS. & WEDGE) | |
| | | 1 | **102-8806** | 1 | KIT-RECEPTACLE (8-PIN) | |
| | | | | | (KIT INCLUDES RECEPTACLE AS. & WEDGE) | |
| | | 1 | **102-8801** | 1 | KIT-RECEPTACLE (12-PIN) | |
| | | | | | (KIT INCLUDES RECEPTACLE AS. & WEDGE) | |
| | | 1 | **155-2255** | 2 | KIT-CONNECTING PLUG (12-PIN) | |
| | | | | | (EACH KIT INCLUDES PLUG AS., WEDGE, & INTERFACE SEAL) | |
| | | 1 | **155-2265** | 1 | KIT-CONNECTING PLUG (8-PIN) | |
| | | | | | (KIT INCLUDES PLUG AS., WEDGE, & INTERFACE SEAL) | |
| | | 1 | **155-2260** | 3 | KIT-CONNECTING PLUG (3-PIN) | |
| | | | | | (EACH KIT INCLUDES PLUG AS., WEDGES, & INTERFACE SEAL) | |
| | | 1 | **155-2270** | 6 | KIT-CONNECTING PLUG (2-PIN) | |
| | | | | | (EACH KIT INCLUDES PLUG AS., WEDGE, & INTERFACE SEAL) | |
| | | 1 | **155-2271** | 3 | KIT-CONNECTING PLUG (4-PIN) | |
| | | | | | (EACH KIT INCLUDES PLUG AS., WEDGE, & INTERFACE SEAL) | |
| | | 1 | **155-2274** | 1 | KIT-CONNECTING PLUG (6-PIN) | |
| | | | | | (KIT INCLUDES PLUG AS., WEDGE, & INTERFACE SEAL) | |
| | | 1 | **177-9648** | 2 | KIT-CONNECTING PLUG (2-PIN) | |
| | | | | | (EACH KIT INCLUDES PLUG AS., WEDGE, & INTERFACE SEAL) | |
| | 11 | 1 | **184-6430** | 1 | COVER | |
| | 12 | 1 | **211-0052** | 2 | NUT (11/16-18 THD) | |
| | 13 | 2 | **213-6097** | 1 | HARNESS AS (POWER) | |
| | 14 | 1 | **240-0541** | 1 | BLOCK AS (FUSE) | |
| | 15 | 1 | **240-0542** | 1 | BLOCK AS (FUSE) | |
| M | 16 | 1 | **095-0733** | 8 | SCREW-MACHINE | |
| M | 17 | 1 | **138-8454** | 3 | SCREW-TRUSS HEAD (M4X0.7X10MM) | |
| B | 18 | 1 | **102-8802** | 4 | KIT-RECEPTACLE (2-PIN) | |
| | | | | | (EACH KIT INCLUDES RECEPTACLE AS. & WEDGE) | |
| B | 19 | 1 | **102-8803** | 1 | KIT-RECEPTACLE (3-PIN) | |
| | | | | | (KIT INCLUDES RECEPTACLE AS. & WEDGE) | |
| B | 20 | 1 | **102-8804** | 1 | KIT-RECEPTACLE (4-PIN) | |
| | | | | | (KIT INCLUDES RECEPTACLE AS. & WEDGE) | |

## 242-8521 WIRING GP-PLATFORM *(contd. )* i01993843

| NOTE | REF NO | GRAPHIC REF | PART NUMBER | QTY | PART NAME 1 2 3 4 5 6 (PRODUCT LEVEL) | SEE PAGE |
|---|---|---|---|---|---|---|
| | 21 | 1,2 | **3S-2093** | 26 | STRAP-CABLE | |
| | 22 | 1 | **4B-4863** | 11 | WASHER (4.7X11X1.2MM THK) | |
| M | 23 | 1 | **5C-7261** | 2 | NUT (M8X1.25 THD) | |
| | 24 | 2 | **7X-7729** | 2 | WASHER (11X25X3MM THK) | |
| | 25 | 1,2 | **8T-4121** | 6 | WASHER-HARD (11X21X2.5MM THK) | |
| M | 26 | 1 | **8T-4133** | 2 | NUT (M10X1.5 THD) | |
| M | 27 | 2 | **8T-4136** | 3 | BOLT (M10X1.5X25MM) | |
| M | 28 | 2 | **8T-4171** | 2 | BOLT (M6X1X12MM) | |
| M | 29 | 2 | **8T-4179** | 1 | BOLT (M12X1.75X20MM) | |
| | 30 | 2 | **8T-4205** | 2 | WASHER-HARD (7.2X14.5X2MM THK) | |
| | 31 | 2 | **8T-4223** | 1 | WASHER-HARD (13.5X25.5X3MM THK) | |
| | 32 | 1 | **8T-4224** | 2 | WASHER-HARD (8.8X16X2MM THK) | |
| | 33 | 1 | **9X-6772** | 3 | STRAP-CABLE | |

B-USE AS REQUIRED
D-ORDER BY THE METER
M-METRIC PART

*242-8521* **WIRING GP-PLATFORM** *(contd.)* **i01993843**

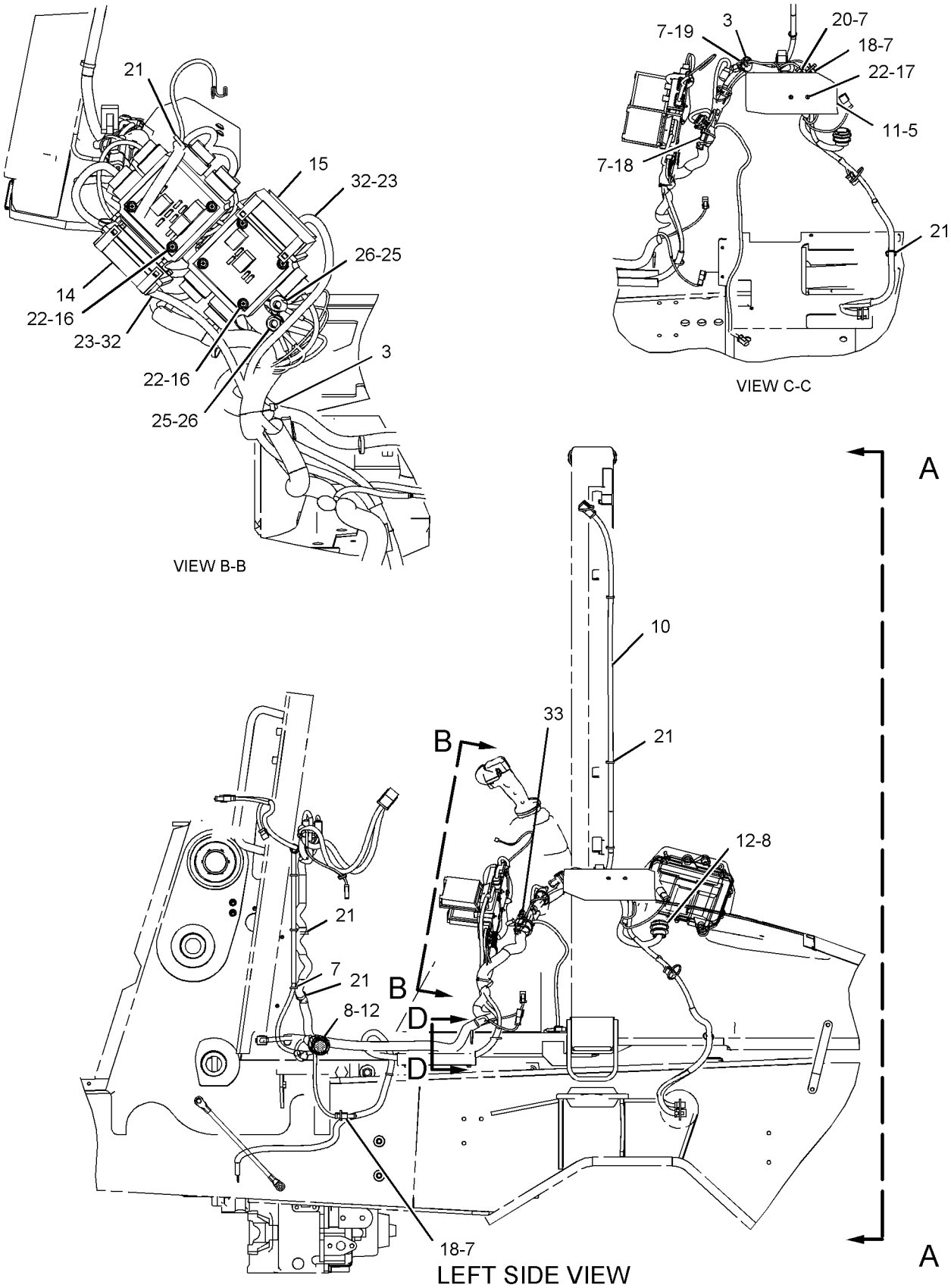


GRAPHIC #1 g01034371

*242-8521* **WIRING GP-PLATFORM** *(contd.)* **i01993843**

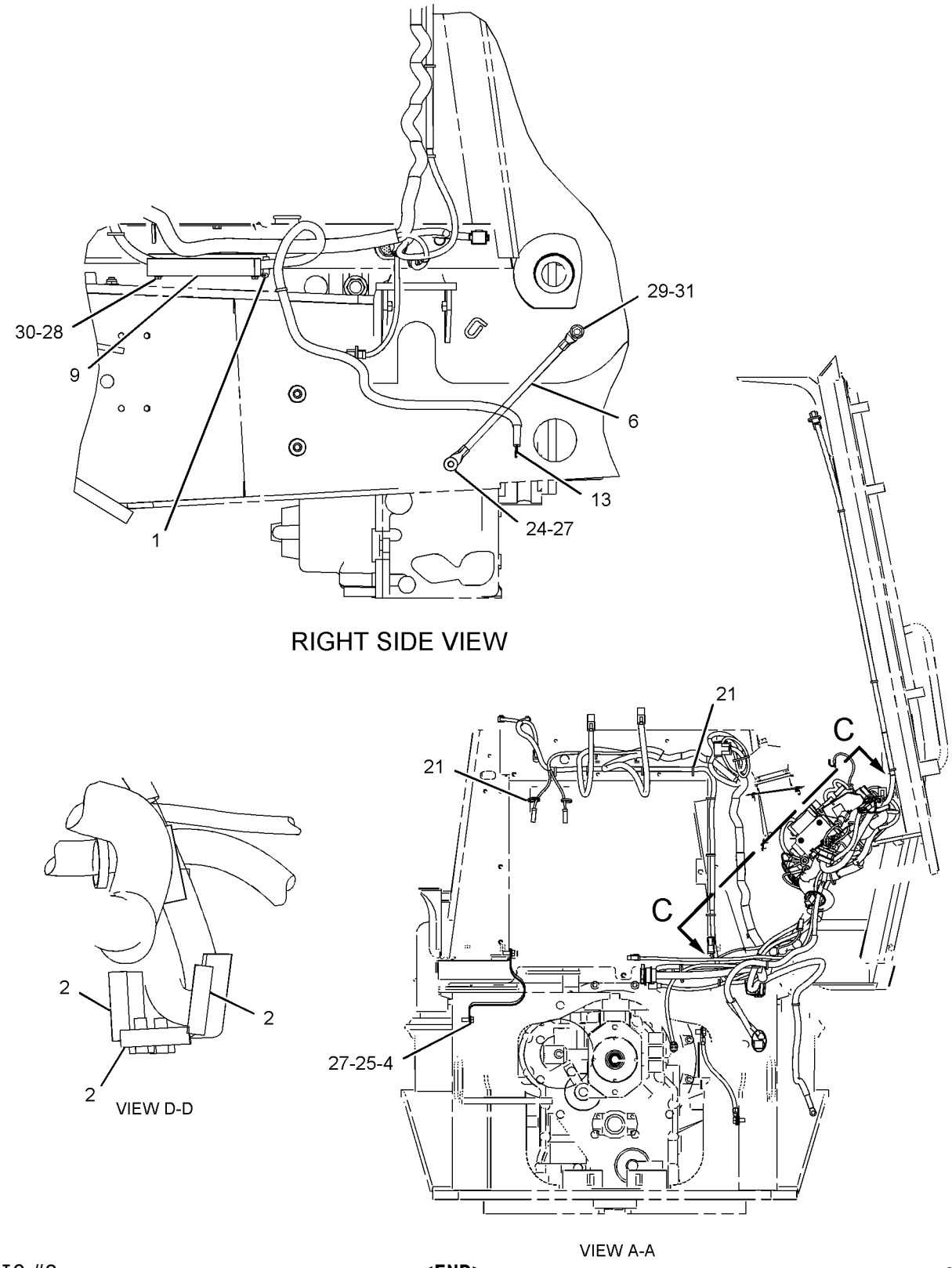


GRAPHIC #2 **<END>** g01034372

# *190-7557* WIRING GP-POWER RECEPTACLE

**S/N: BXC1-UP; DSX1-UP**
**PART OF 214-7008, 214-7009 CAB AR-ENCLOSED ROPS, 190-2802 CONVERSION**
**AR-CERTIFICATION**
**AN ATTACHMENT**

**SMCS-1408, 7301** **i02000063**

| NOTE | REF NO | GRAPHIC REF | PART NUMBER | QTY | PART NAME 1 2 3 4 5 6 (PRODUCT LEVEL) | SEE PAGE |
|---|---|---|---|---|---|---|
| | 1 | 1 | **113-8490** | 1 | FUSE (10 AMP) | |
| | 2 | 1 | **178-7539** | 1 | RECEPTACLE AS (POWER PORT) | |
| | 3 | 1 | **3S-2093** | 1 | STRAP-CABLE | |

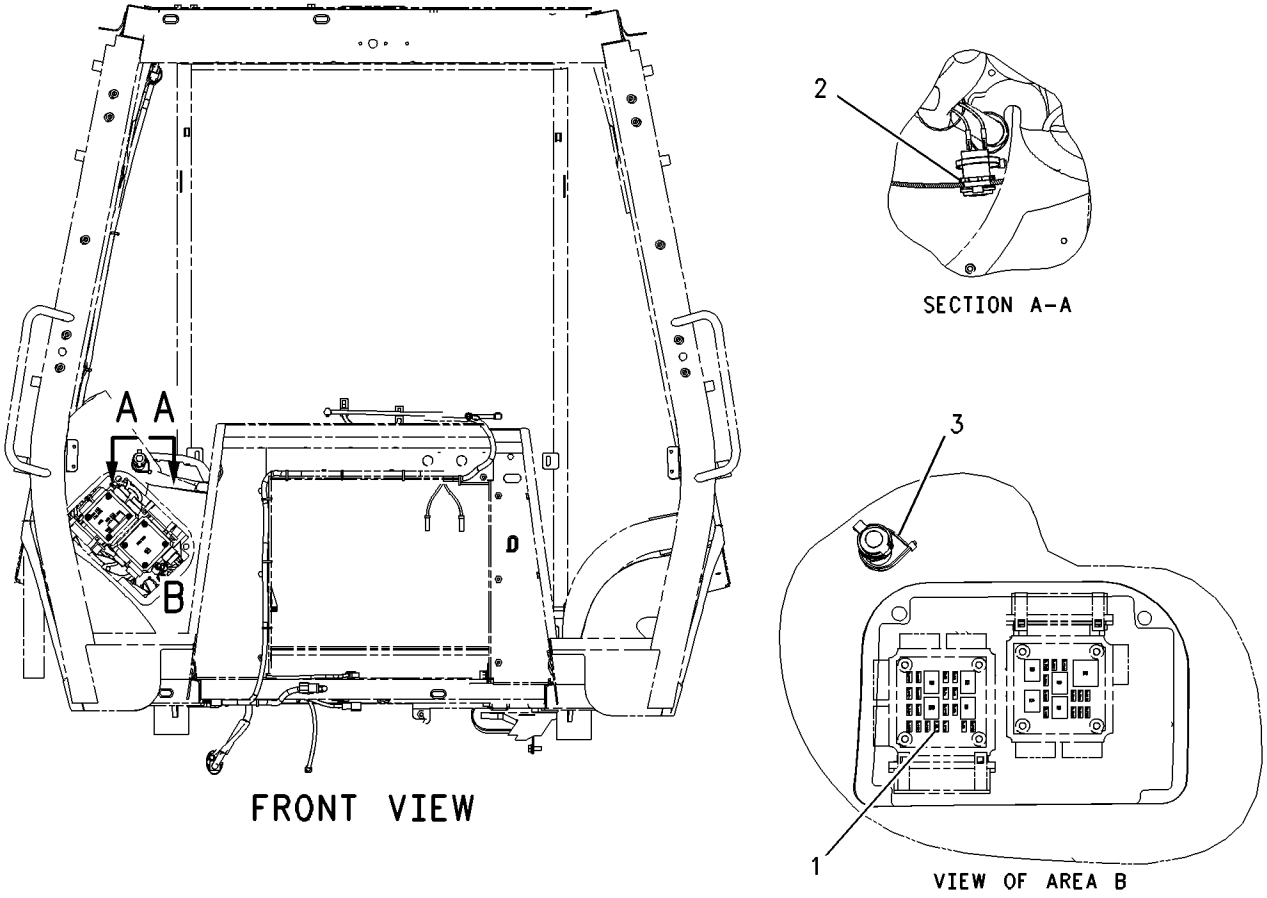


GRAPHIC #1 **<END>** g00878859

# ELECTRICAL AND STARTING SYSTEM

## *185-8807* WIRING GP-REAR

**S/N: BXC1-UP; DSX1-UP**

**PART OF 237-9288, 237-9289 CHASSIS AR**

**SMCS-1408** **i01670257**

| NOTE | REF NO | GRAPHIC REF | PART NUMBER | QTY | PART NAME 1 2 3 4 5 6 (PRODUCT LEVEL) | SEE PAGE |
|---|---|---|---|---|---|---|
| B | 1 | 1,2 | **3S-2093** | 8 | STRAP-CABLE | |
| | 2 | 1,2 | **7K-1181** | 6 | STRAP-CABLE | |
| B | 3 | 2 | **8T-8737** | 8 | PLUG-SEAL | |
| | 4 | 2 | **9U-2277** | 1 | CLIP AS | |
| B | 5 | 2 | **155-8522** | 1 | MOUNT | |
| | 6 | 1 | **167-3707** | 1 | HARNESS AS (REAR END) | |
| | | 1 | **102-8803** | 1 | KIT-RECEPTACLE (3 PIN) | |
| | | | | | (KIT SERVICES RECEPTACLE AS AND WEDGE) | |
| | | 1 | **102-8806** | 1 | KIT-RECEPTACLE (8 PIN) | |
| | | | | | (KIT SERVICES RECEPTACLE AS AND WEDGE) | |
| | | 1 | **155-2270** | 1 | KIT-CONNECTING PLUG (2 PIN) | |
| | | | | | (KIT SERVICES PLUG AS AND WEDGE) | |
| | | 1 | **155-2271** | 1 | KIT-CONNECTING PLUG (4 PIN) | |
| | | | | | (KIT SERVICES PLUG AS AND WEDGE) | |
| | | 1 | **155-2274** | 1 | KIT-CONNECTING PLUG (6 PIN) | |
| | | | | | (KIT SERVICES PLUG AS AND WEDGE) | |
| | 7 | 2 | **169-0597** | 1 | SWITCH AS (SIDE SHIFT LOCK) | |
| | | 2 | **111-7899** | 1 | GASKET | |
| | 8 | 2 | **096-4415** | 1 | LOCKWASHER | |
| BM | 9 | 2 | **150-4086** | 1 | SCREW (M4X.7X16MM) | |
| B | 10 | 2 | **102-8802** | 4 | KIT-RECEPTACLE (2 PIN) | |
| | | | | | (KIT SERVICES RECEPTACLE AS AND WEDGE) | |
| | 11 | 2 | **4P-7428** | 1 | CLIP | |
| | 12 | 2 | **4P-7581** | 2 | CLIP | |
| BM | 13 | 2 | **8T-2659** | 1 | LOCKNUT (M4X0.7 THD) | |
| | 14 | 2 | **8T-4121** | 2 | WASHER-HARD (11X21X2.5MM THK) | |
| M | 15 | 2 | **8T-4133** | 2 | NUT (M10X1.5 THD) | |
| M | 16 | 2 | **8T-4137** | 1 | BOLT (M10X1.5X20MM) | |
| M | 17 | 2 | **8T-4195** | 1 | BOLT (M10X1.5X30MM) | |

B-USE AS REQUIRED
M-METRIC PART

*185-8807* **WIRING GP-REAR** *(contd.)* **i01670257**

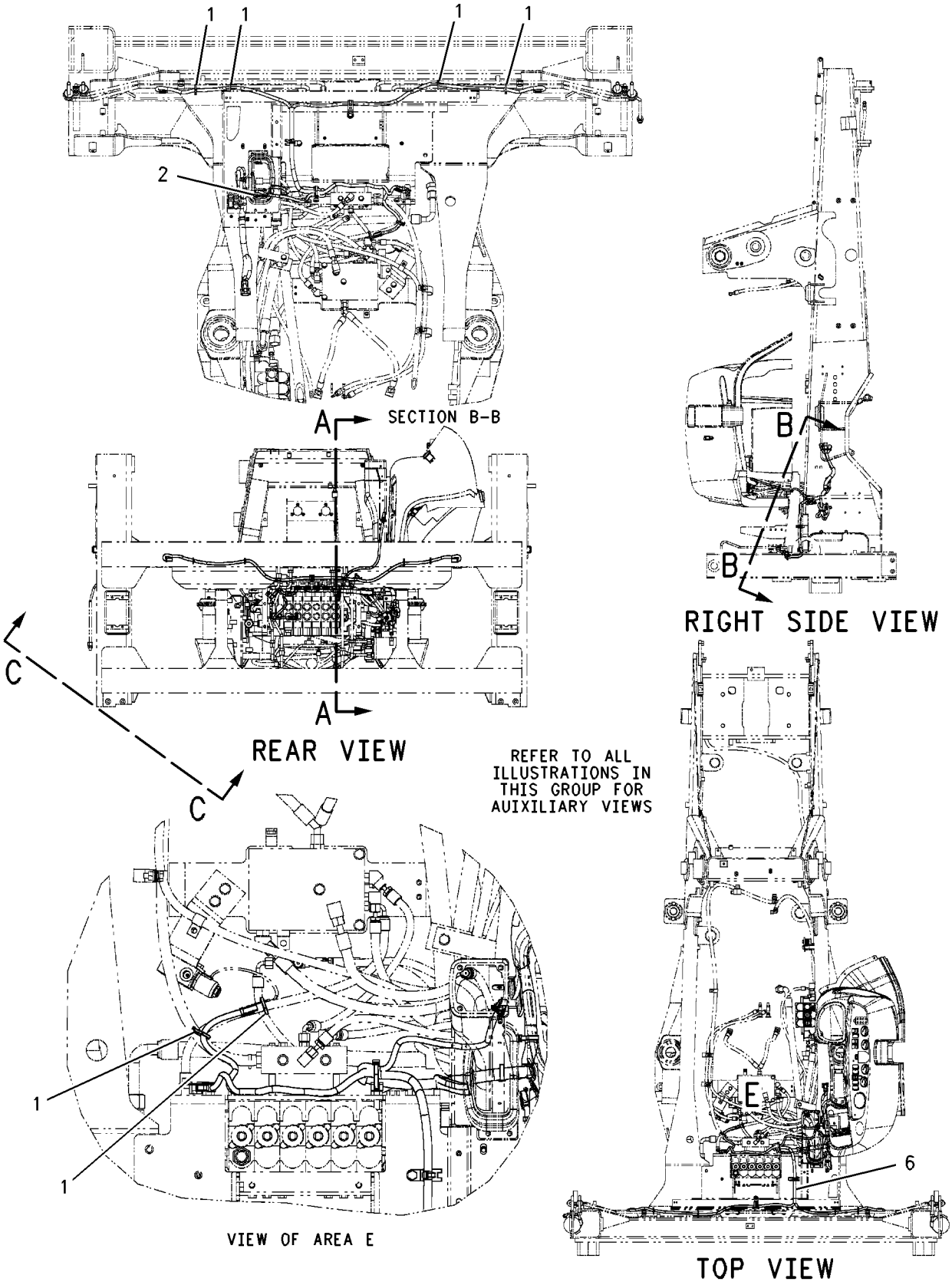


GRAPHIC #1 g00863376

*185-8807* **WIRING GP-REAR** *(contd.)* **i01670257**

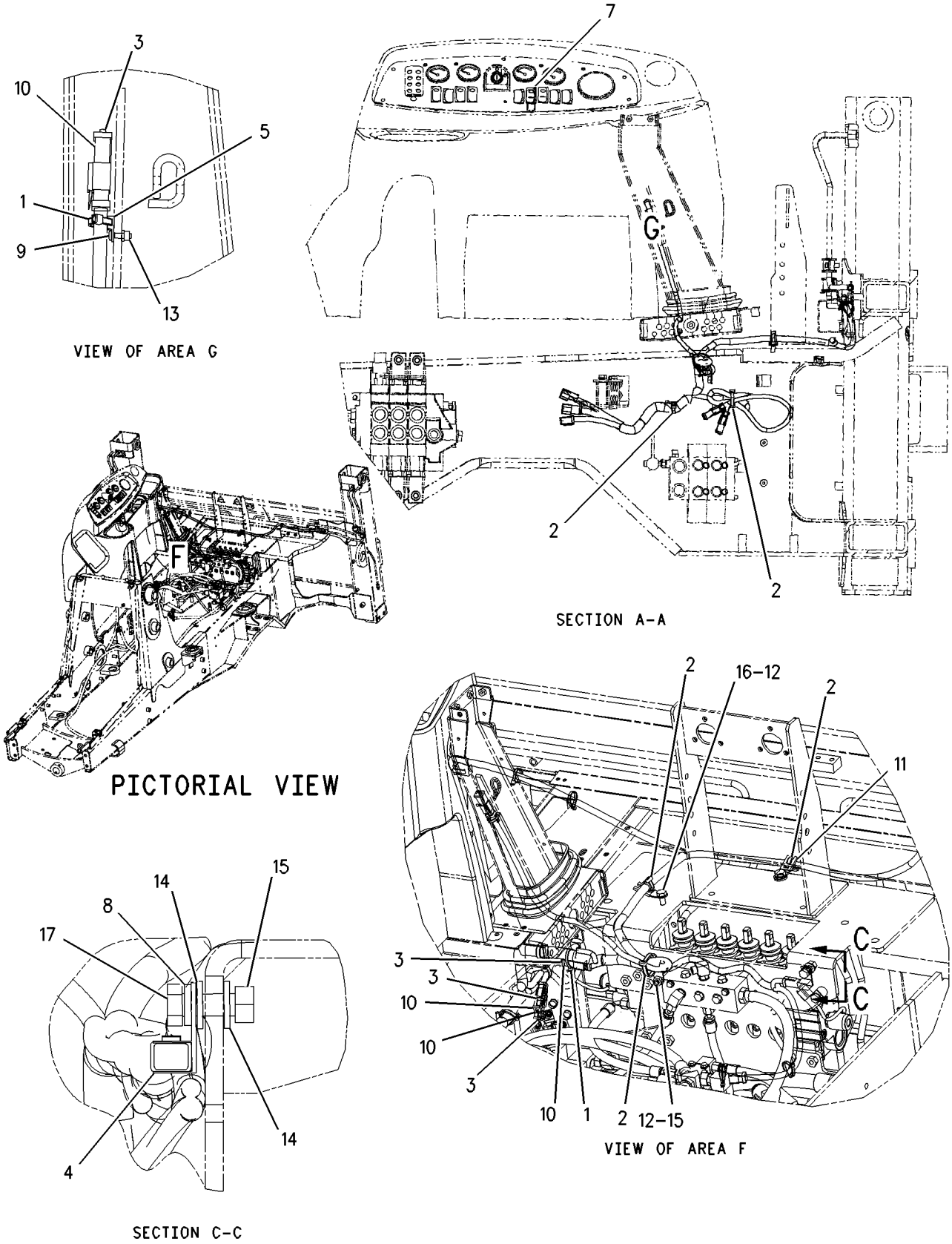


GRAPHIC #2 **<END>** g00863287

# ELECTRICAL AND STARTING SYSTEM

## *186-0311* WIRING GP-RIDE CONTROL

**S/N: BXC1-UP; DSX1-UP**
**PART OF 239-9400 CONTROL AR-RIDE**
**AN ATTACHMENT**

**SMCS-1408** **i02011348**

| NOTE | REF NO | GRAPHIC REF | PART NUMBER | QTY | PART NAME 1 2 3 4 5 6 (PRODUCT LEVEL) | SEE PAGE |
|---|---|---|---|---|---|---|
| | 1 | 1 | **3E-9362** | 1 | RELAY AS (12 VOLT) | |
| | 2 | 1 | **3S-2093** | 18 | STRAP-CABLE | |
| | 3 | 1 | **106-8704** | 1 | SUPPRESSOR AS-ARC | |
| | | 1 | **3E-3365** | 1 | WEDGE-RECEPTACLE LOCK (2-PIN) | |
| | | 1 | **186-3735** | 2 | PIN-CONNECTOR | |
| | | 1 | **102-8802** | 1 | KIT-RECEPTACLE (2-PIN) | |
| | 4 | 1 | **113-8490** | 1 | FUSE (10-AMPERE) | |
| | 5 | 1 | **131-9203** | 1 | SWITCH AS-PRESSURE | |
| | | 1 | **186-3735** | 3 | PIN-CONNECTOR | |
| | | 1 | **3E-3371** | 1 | WEDGE-RECEPTACLE LOCK (3-PIN) | |
| | | 1 | **102-8803** | 1 | KIT-RECEPTACLE (3-PIN) | |
| | 6 | 1 | **169-0607** | 1 | SWITCH AS-ROCKER (RIDE CONTROL) | |
| | | 1 | **111-7899** | 1 | GASKET | |
| | 7 | 1 | **174-6395** | 1 | HARNESS AS-RIDE CONTROL (FRONT CONSOLE) | |
| | | 1 | **155-2270** | 1 | KIT-CONNECTING PLUG (2-PIN) | |
| | | 1 | **155-2274** | 1 | KIT-CONNECTING PLUG (6-PIN) | |
| | 8 | 1 | **174-6398** | 1 | HARNESS AS-RIDE CONTROL (PLATFORM) | |
| | | 1 | **102-8804** | 1 | KIT-RECEPTACLE (4-PIN) | |
| | | 1 | **102-8805** | 1 | KIT-RECEPTACLE (6-PIN) | |
| | | 1 | **155-2270** | 2 | KIT-CONNECTING PLUG (2-PIN) | |
| | | 1 | **155-2260** | 1 | KIT-CONNECTING PLUG (3-PIN) | |
| | | 1 | **155-2274** | 1 | KIT-CONNECTING PLUG (6-PIN) | |
| | 9 | 1 | **200-2996** | 1 | HARNESS AS-RIDE CONTROL (FRAME, LEFT SIDE) | |
| | | 1 | **102-8803** | 1 | KIT-RECEPTACLE (3-PIN) | |
| | | 1 | **155-2260** | 1 | KIT-CONNECTING PLUG (3-PIN) | |
| | | 1 | **155-2270** | 1 | KIT-CONNECTING PLUG (2-PIN) | |
| M | 10 | 1 | **138-8454** | 1 | SCREW-TRUSS HEAD (M4X0.7X10MM) | |
| | 11 | 1 | **3J-1907** | 1 | SEAL-O-RING | |
| | 12 | 1 | **4B-4863** | 1 | WASHER (4.7X11X1.2MM THK) | |
| | 13 | 1 | **4P-8134** | 1 | CLIP | |

M-METRIC PART

*186-0311* **WIRING GP-RIDE CONTROL** *(contd.)* **i02011348**

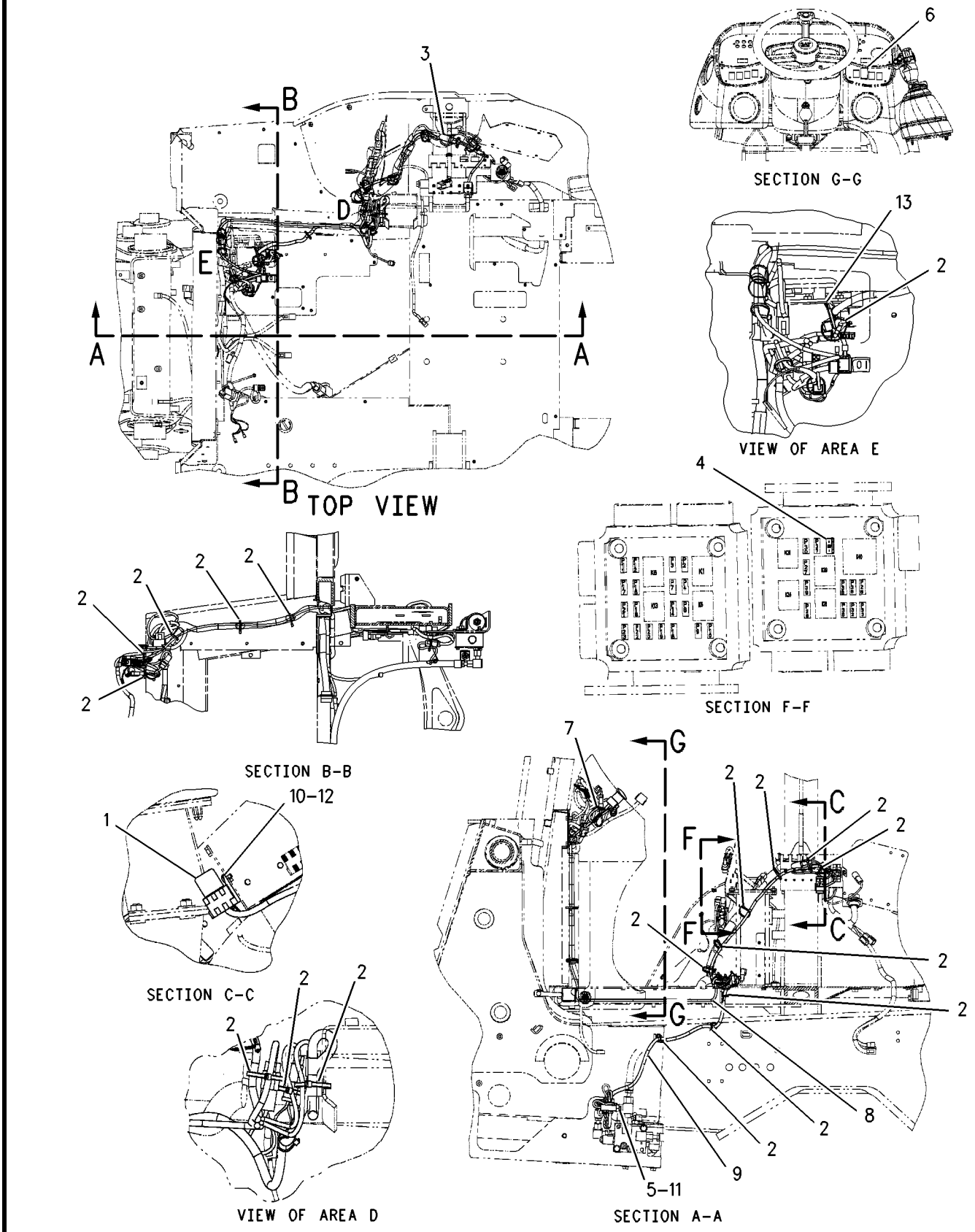


GRAPHIC #1 **<END>** g00775260

# *186-0312* WIRING GP-RIDE CONTROL—AUTOSHIFT

**S/N: BXC1-UP; DSX1-UP**

**PART OF 239-9403 CONTROL AR-RIDE, 239-9410 KIT-RIDE CONTROL**

**AN ATTACHMENT**

**SMCS-1408** **i02000090**

| NOTE | REF NO | GRAPHIC REF | PART NUMBER | QTY | PART NAME 1 2 3 4 5 6 (PRODUCT LEVEL) | SEE PAGE |
|---|---|---|---|---|---|---|
| | 1 | 1 | **3E-9362** | 1 | RELAY AS (12 VOLT) | |
| | 2 | 1 | **3S-2093** | 18 | STRAP-CABLE | |
| | 3 | 1 | **106-8704** | 2 | SUPPRESSOR AS-ARC | |
| | | | | | (EACH INCLUDES) | |
| | | 1 | **102-8802** | 1 | KIT-RECEPTACLE (2-PIN) | |
| | | 1 | **186-3735** | 2 | PIN-CONNECTOR | |
| | 4 | 1 | **113-8490** | 1 | FUSE (10 AMP) | |
| | 5 | 1 | **131-9203** | 1 | SWITCH AS-PRESSURE | |
| | | 1 | **102-8803** | 1 | KIT-RECEPTACLE (3-PIN) | |
| | | 1 | **186-3735** | 3 | PIN-CONNECTOR | |
| | 6 | 1 | **169-0608** | 1 | SWITCH AS (RIDE CONTROL) | |
| | | 1 | **111-7899** | 1 | GASKET | |
| | 7 | 1 | **174-6395** | 1 | HARNESS AS-RIDE CONTROL (FRONT CONSOLE) | |
| | | 1 | **155-2270** | 1 | KIT-CONNECTING PLUG (2-PIN) | |
| | | 1 | **155-2274** | 1 | KIT-CONNECTING PLUG (6-PIN) | |
| | 8 | 1 | **174-6398** | 1 | HARNESS AS-RIDE CONTROL (PLATFORM) | |
| | | 1 | **102-8804** | 1 | KIT-RECEPTACLE (4-PIN) | |
| | | 1 | **102-8805** | 1 | KIT-RECEPTACLE (6-PIN) | |
| | | 1 | **155-2270** | 1 | KIT-CONNECTING PLUG (2-PIN) | |
| | | 1 | **155-2260** | 1 | KIT-CONNECTING PLUG (3-PIN) | |
| | | 1 | **155-2274** | 1 | KIT-CONNECTING PLUG (6-PIN) | |
| | 9 | 1 | **200-2996** | 1 | HARNESS AS-RIDE CONTROL (FRAME) | |
| | | 1 | **102-8803** | 1 | KIT-RECEPTACLE (3-PIN) | |
| | | 1 | **155-2260** | 1 | KIT-CONNECTING PLUG (3-PIN) | |
| | | 1 | **155-2270** | 1 | KIT-CONNECTING PLUG (2-PIN) | |
| M | 10 | 1 | **138-8454** | 1 | SCREW-TRUSS HEAD (M4X0.7X10MM) | |
| | 11 | 1 | **3J-1907** | 1 | SEAL-O-RING | |
| | 12 | 1 | **4B-4863** | 1 | WASHER (4.7X11X1.2MM THK) | |
| | 13 | 1 | **4P-8134** | 1 | CLIP | |

M-METRIC PART

*186-0312* **WIRING GP-RIDE CONTROL** *(contd.)* **i02000090**

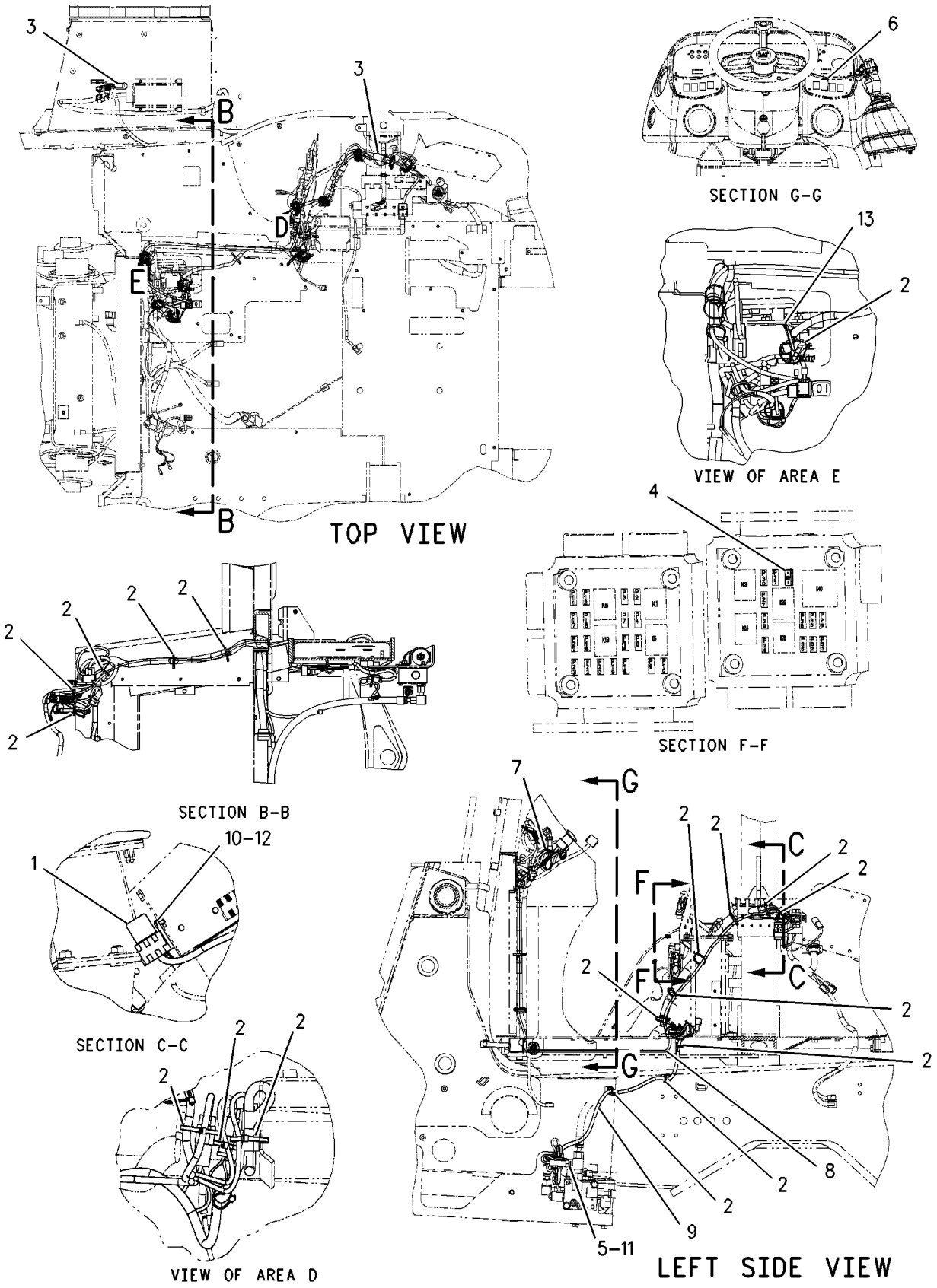


GRAPHIC #1 **<END>** g00863443

# *194-1947* WIRING GP-RIDE CONTROL

**S/N: BXC1-UP; DSX1-UP**
**PART OF 239-9404 CONTROL AR-RIDE**
**AN ATTACHMENT**

**SMCS-1408** **i02001095**

| NOTE | REF NO | GRAPHIC REF | PART NUMBER | QTY | PART NAME 1 2 3 4 5 6 (PRODUCT LEVEL) | SEE PAGE |
|---|---|---|---|---|---|---|
| | 1 | 1 | **3E-9362** | 3 | RELAY AS (12 VOLT) (DEAD ENGINE LOWER,RIDE CONTROL) | |
| | 2 | 1 | **3S-2093** | 39 | STRAP-CABLE | |
| | 3 | 1 | **106-8704** | 2 | SUPPRESSOR AS-ARC | |
| | | | | | (EACH INCLUDES) | |
| | | 1 | **3E-3365** | 1 | WEDGE-RECEPTACLE LOCK (2-PIN) | |
| | | 1 | **186-3735** | 2 | PIN-CONNECTOR | |
| | | 1 | **102-8802** | 1 | KIT-RECEPTACLE (2-PIN) | |
| | 4 | 1 | **113-8490** | 1 | FUSE (10 AMP) | |
| | 5 | 1 | **131-9203** | 1 | SWITCH AS-PRESSURE | |
| | | 1 | **3E-3371** | 1 | WEDGE-RECEPTACLE LOCK (3-PIN) | |
| | | 1 | **186-3735** | 3 | PIN-CONNECTOR | |
| | | 1 | **102-8803** | 1 | KIT-RECEPTACLE (3-PIN) | |
| | 6 | 1 | **169-0607** | 1 | SWITCH AS-ROCKER (RIDE CONTROL) | |
| | | 1 | **111-7899** | 1 | GASKET | |
| | 7 | 1 | **174-6398** | 1 | HARNESS AS-RIDE CONTROL (PLATFORM) | |
| | | 1 | **102-8804** | 1 | KIT-RECEPTACLE (4-PIN) | |
| | | 1 | **102-8805** | 1 | KIT-RECEPTACLE (6-PIN) | |
| | | 1 | **155-2270** | 2 | KIT-CONNECTING PLUG (2-PIN) | |
| | | 1 | **155-2260** | 1 | KIT-CONNECTING PLUG (3-PIN) | |
| | | 1 | **155-2274** | 1 | KIT-CONNECTING PLUG (6-PIN) | |
| | 8 | 1 | **194-1937** | 1 | HARNESS AS-RIDE CONTROL (FRAME, RIGHT SIDE) (DEAD ENGINE LOWER) | |
| | | 1 | **102-8804** | 1 | KIT-RECEPTACLE (4-PIN) | |
| | | 1 | **155-2260** | 1 | KIT-CONNECTING PLUG (3-PIN) | |
| | | 1 | **155-2270** | 1 | KIT-CONNECTING PLUG (2-PIN) | |
| | 9 | 1 | **194-1938** | 1 | HARNESS AS-RIDE CONTROL (SIDE CONSOLE) | |
| | | 1 | **102-8804** | 2 | KIT-RECEPTACLE (4-PIN) | |
| | | 1 | **155-2271** | 2 | KIT-CONNECTING PLUG (4-PIN) | |
| | | 1 | **155-2270** | 1 | KIT-CONNECTING PLUG (2-PIN) | |
| | 10 | 1 | **194-1941** | 1 | HARNESS AS-RIDE CONTROL (FRONT CONSOLE) | |
| | | 1 | **155-2270** | 1 | KIT-CONNECTING PLUG (2-PIN) | |
| | | 1 | **155-2274** | 1 | KIT-CONNECTING PLUG (6-PIN) | |
| | 11 | 1 | **200-2996** | 1 | HARNESS AS-RIDE CONTROL (FRAME, LEFT SIDE) | |
| | | 1 | **102-8803** | 1 | KIT-RECEPTACLE (3-PIN) | |
| | | 1 | **155-2260** | 1 | KIT-CONNECTING PLUG (3-PIN) | |
| | | 1 | **155-2270** | 1 | KIT-CONNECTING PLUG (2-PIN) | |
| M | 12 | 1 | **138-8454** | 3 | SCREW-TRUSS HEAD (M4X0.7X10MM) | |
| | 13 | 1 | **3J-1907** | 1 | SEAL-O-RING | |
| | 14 | 1 | **4B-4863** | 3 | WASHER (4.7X11X1.2MM THK) | |
| | 15 | 1 | **4P-8134** | 1 | CLIP | |

M-METRIC PART

*194-1947* **WIRING GP-RIDE CONTROL** *(contd.)* **i02001095**

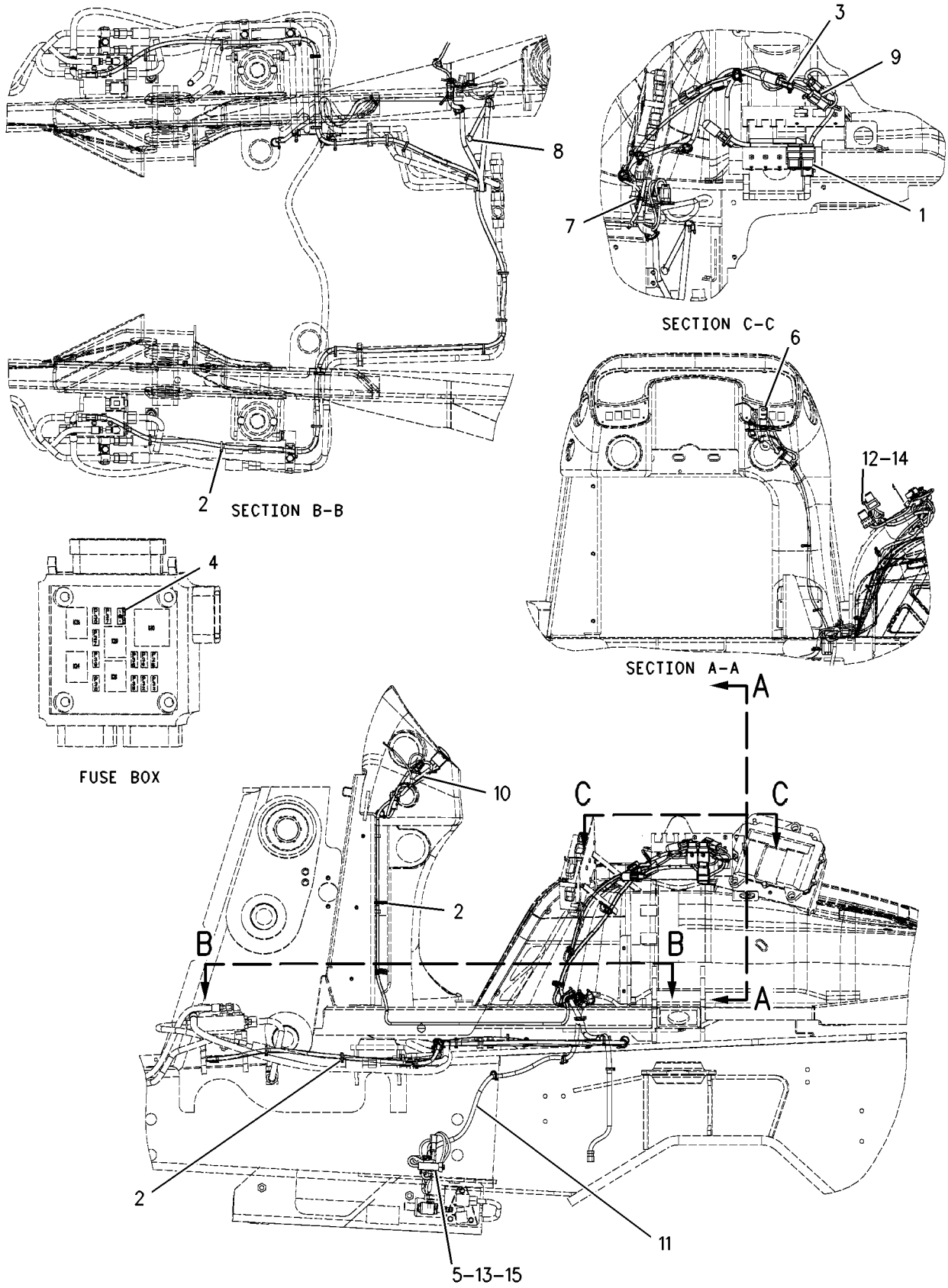


GRAPHIC #1 **<END>** g00771699

# *194-1948* WIRING GP-RIDE CONTROL—AUTOSHIFT

**S/N: BXC1-UP; DSX1-UP**
**PART OF 239-9405, 239-9413 CONTROL AR-RIDE**
**AN ATTACHMENT**

**SMCS-1408** **i02001097**

| NOTE | REF NO | GRAPHIC REF | PART NUMBER | QTY | PART NAME 1 2 3 4 5 6 (PRODUCT LEVEL) | SEE PAGE |
|---|---|---|---|---|---|---|
| | 1 | 1 | **3E-9362** | 3 | RELAY AS (12 VOLT) (DEAD ENGINE LOWER,RIDE CONTROL) | |
| | 2 | 1 | **3S-2093** | 39 | STRAP-CABLE | |
| | 3 | 1 | **106-8704** | 2 | SUPPRESSOR AS-ARC | |
| | | | | | (EACH INCLUDES) | |
| | | 1 | **102-8802** | 1 | KIT-RECEPTACLE (2-PIN) | |
| | | 1 | **186-3735** | 2 | PIN-CONNECTOR | |
| | 4 | 1 | **113-8490** | 1 | FUSE (10 AMP) | |
| | 5 | 1 | **131-9203** | 1 | SWITCH AS-PRESSURE | |
| | | 1 | **102-8803** | 1 | KIT-RECEPTACLE (3-PIN) | |
| | | 1 | **186-3735** | 3 | PIN-CONNECTOR | |
| | 6 | 1 | **169-0608** | 1 | SWITCH AS-ROCKER (RIDE CONTROL) | |
| | | 1 | **111-7899** | 1 | GASKET | |
| | 7 | 1 | **174-6398** | 1 | HARNESS AS-RIDE CONTROL (PLATFORM) | |
| | | 1 | **102-8804** | 1 | KIT-RECEPTACLE (4-PIN) | |
| | | 1 | **102-8805** | 1 | KIT-RECEPTACLE (6-PIN) | |
| | | 1 | **155-2270** | 2 | KIT-CONNECTING PLUG (2-PIN) | |
| | | 1 | **155-2260** | 1 | KIT-CONNECTING PLUG (3-PIN) | |
| | | 1 | **155-2274** | 1 | KIT-CONNECTING PLUG (6-PIN) | |
| | 8 | 1 | **194-1937** | 1 | HARNESS AS-RIDE CONTROL (FRAME, RIGHT SIDE) | |
| | | 1 | **102-8804** | 1 | KIT-RECEPTACLE (4-PIN) | |
| | | 1 | **155-2260** | 2 | KIT-CONNECTING PLUG (3-PIN) | |
| | | 1 | **155-2270** | 2 | KIT-CONNECTING PLUG (2-PIN) | |
| | 9 | 1 | **194-1938** | 1 | HARNESS AS-RIDE CONTROL (SIDE CONSOLE) | |
| | | 1 | **102-8804** | 2 | KIT-RECEPTACLE (4-PIN) | |
| | | 1 | **155-2271** | 2 | KIT-CONNECTING PLUG (4-PIN) | |
| | | 1 | **155-2270** | 1 | KIT-CONNECTING PLUG (2-PIN) | |
| | 10 | 1 | **194-1941** | 1 | HARNESS AS-RIDE CONTROL (FRONT CONSOLE) | |
| | | 1 | **155-2270** | 1 | KIT-CONNECTING PLUG (2-PIN) | |
| | | 1 | **155-2274** | 1 | KIT-CONNECTING PLUG (6-PIN) | |
| | 11 | 1 | **200-2996** | 1 | HARNESS AS-RIDE CONTROL (FRAME, LEFT SIDE) | |
| | | 1 | **102-8803** | 1 | KIT-RECEPTACLE (3-PIN) | |
| | | 1 | **155-2260** | 1 | KIT-CONNECTING PLUG (3-PIN) | |
| | | 1 | **155-2270** | 1 | KIT-CONNECTING PLUG (2-PIN) | |
| M | 12 | 1 | **138-8454** | 3 | SCREW-TRUSS HEAD (M4X0.7X10MM) | |
| | 13 | 1 | **3J-1907** | 1 | SEAL-O-RING | |
| | 14 | 1 | **4B-4863** | 3 | WASHER (4.7X11X1.2MM THK) | |
| | 15 | 1 | **4P-8134** | 1 | CLIP | |

M-METRIC PART

*194-1948* **WIRING GP-RIDE CONTROL** *(contd.)* **i02001097**

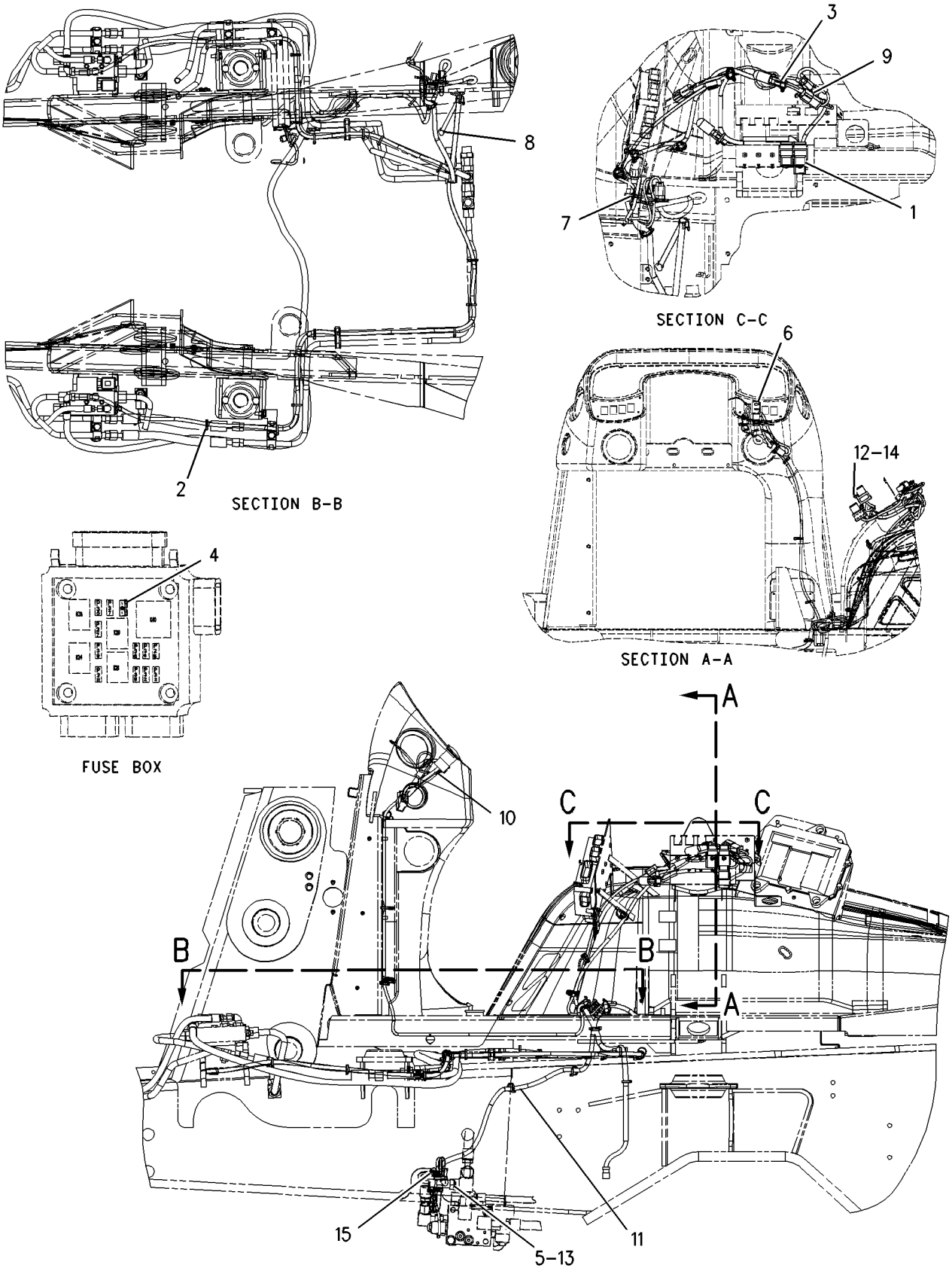


GRAPHIC #1 **<END>** g00774535

# ELECTRICAL AND STARTING SYSTEM

## *122-1645* WIRING GP-SENSOR

**S/N: BXC1-UP; DSX1-UP**

**AN ATTACHMENT**

**SMCS-1408** **i01938046**

| NOTE | REF NO | GRAPHIC REF | PART NUMBER | QTY | PART NAME 1 2 3 4 5 6 (PRODUCT LEVEL) | SEE PAGE |
|---|---|---|---|---|---|---|
| | 1 | 1 | **3S-2093** | 38 | STRAP-CABLE | |
| | 2 | 1 | **118-7790** | 1 | BRACKET AS | |
| M | 3 | 1 | **8T-4138** | 2 | BOLT (M6X1X20MM) | |
| | 4 | 1 | **8T-4205** | 2 | WASHER-HARD (7.2X14.5X2MM THK) | |
| | 5 | 1 | **107-5605** | 1 | HARNESS AS-WORK TOOL (SENSOR) | |
| | | 1 | **102-8803** | 1 | KIT-RECEPTACLE (3 PIN) | |
| | 6 | 1 | **206-1486** | 1 | SWITCH AS-ROLLER (RETURN TO DIG) | |
| | | 1 | **2H-3922** | 1 | LOCKWASHER | |
| | | 1 | **6V-8363** | 2 | SCREW (10-32X0.312 IN) | |
| | | 1 | **6V-8370** | 1 | NUT-HEX (3/4-32 THD) | |
| | | 1 | **8F-1434** | 2 | LOCKWASHER | |
| | | 1 | **9X-0199** | 1 | BOOT-SWITCH | |

M-METRIC PART

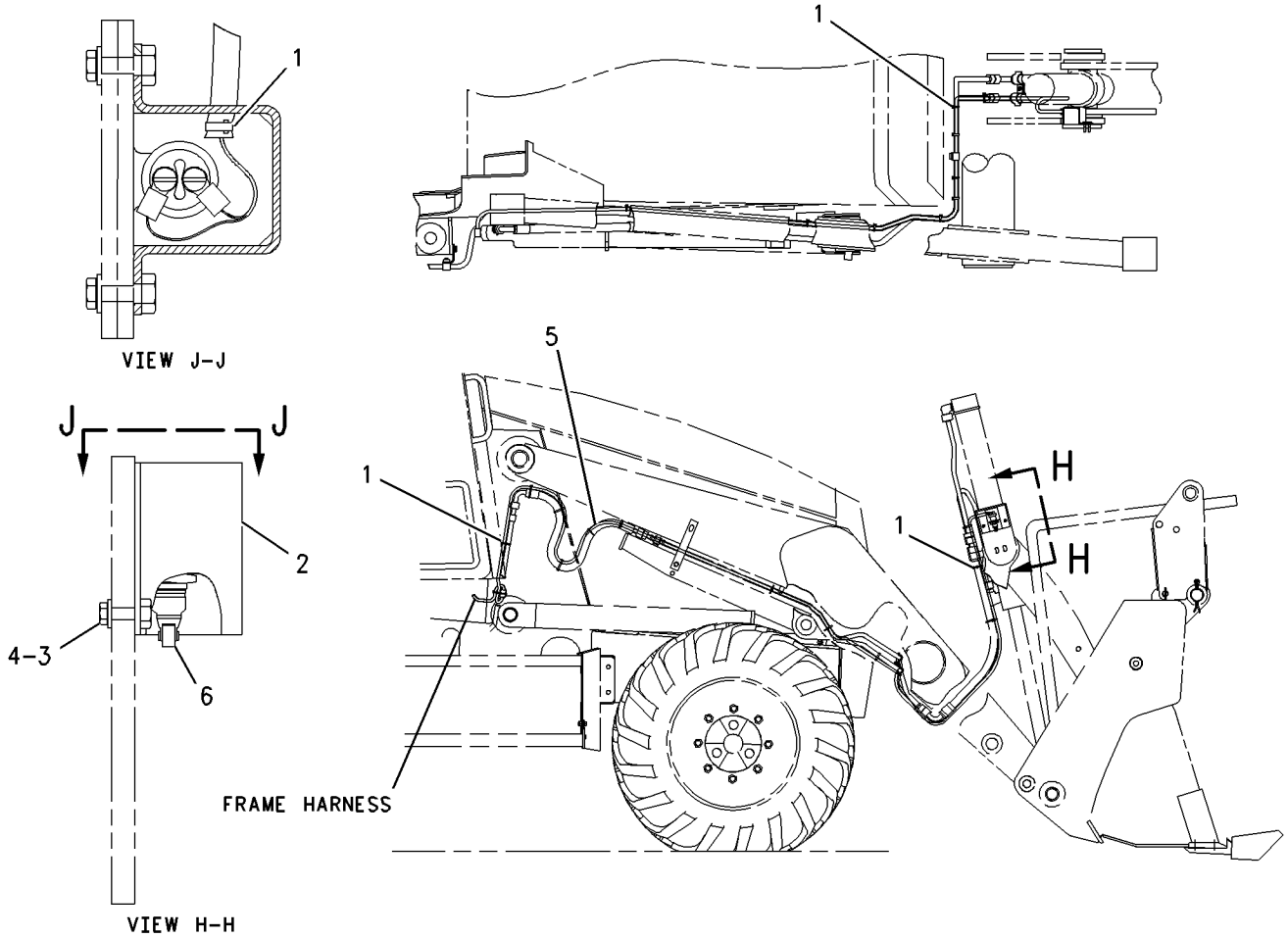


GRAPHIC #1 **<END>** g00890606

# *186-0307* WIRING GP-STABILIZER ALARM

**S/N: BXC1-UP; DSX1-UP**
**PART OF 210-8918 STABILIZER AR**
**AN ATTACHMENT**

**SMCS-1408, 7222, 7400** **i01807130**

| NOTE | REF NO | GRAPHIC REF | PART NUMBER | QTY | PART NAME 1 2 3 4 5 6 (PRODUCT LEVEL) | SEE PAGE |
|---|---|---|---|---|---|---|
| | 1 | 1 | **3S-2093** | 9 | STRAP-CABLE | |
| | 2 | 1 | **136-5185** | 1 | HORN | |
| | 3 | 1 | **172-9200** | 1 | SUPPRESSOR-ARC | |
| | 4 | 1 | **186-0320** | 1 | HARNESS AS-ALARM (STABILIZER) | |
| | | 1 | **102-8802** | 3 | KIT-RECEPTACLE (2 PIN) | |
| | | 1 | **155-2270** | 2 | KIT-CONNECTING PLUG (2 PIN) | |
| | | 1 | **155-2271** | 1 | KIT-CONNECTING PLUG (4 PIN) | |

*186-0307* **WIRING GP-STABILIZER ALARM** *(contd.)* **i01807130**

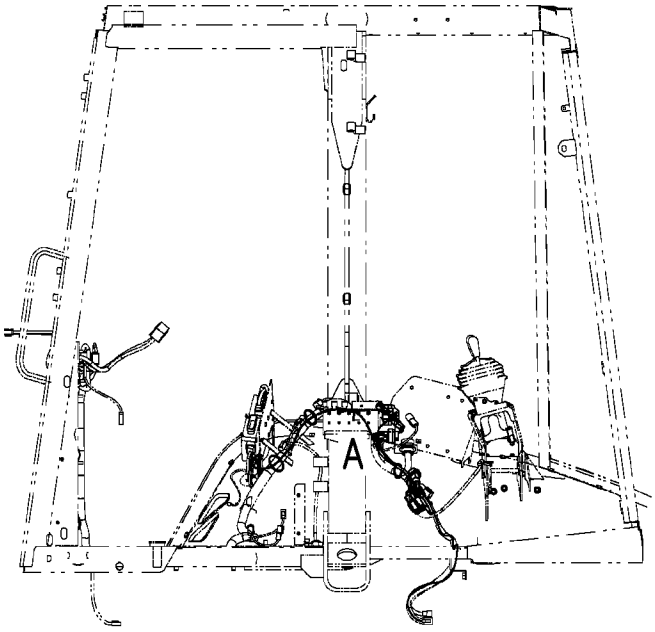


LEFT SIDE VIEW

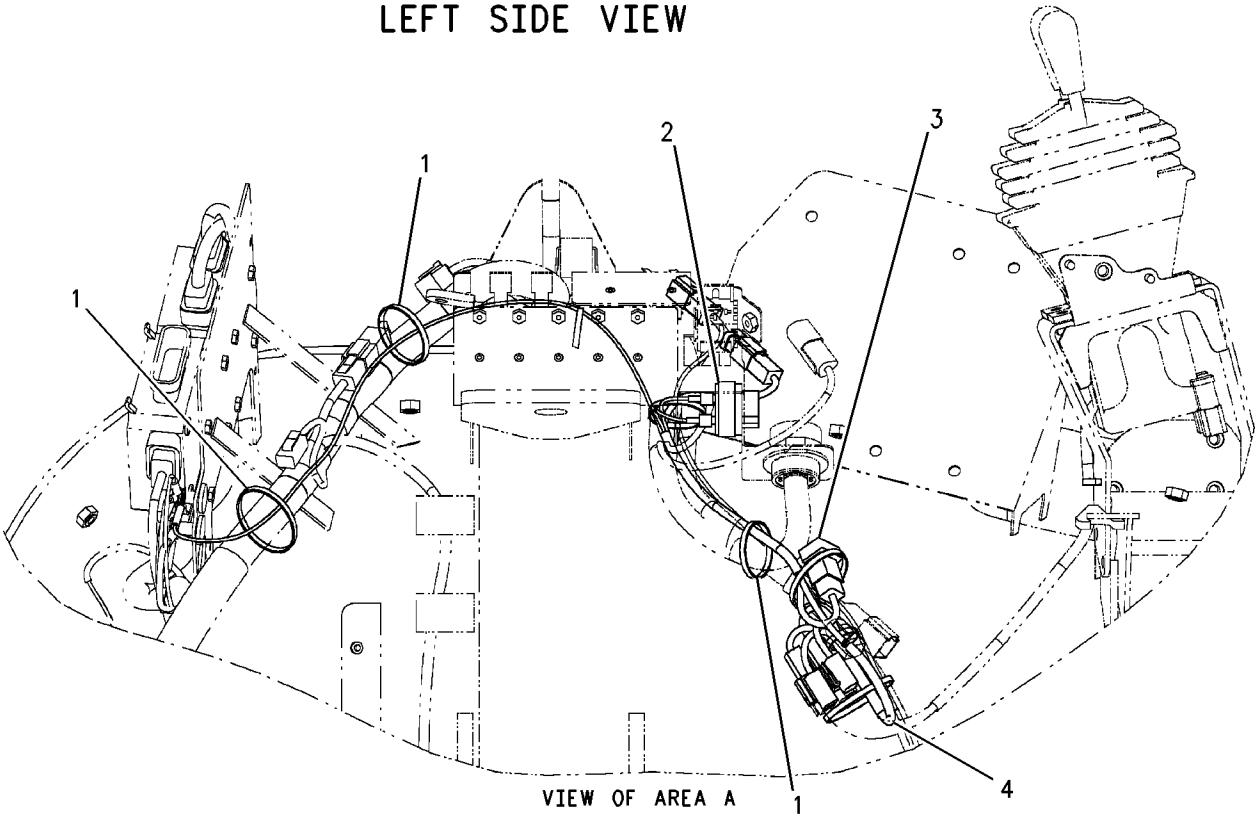


VIEW OF AREA A

GRAPHIC #1 **<END>** g00864642

# ELECTRICAL AND STARTING SYSTEM

## *186-0309* WIRING GP-STEERING—ALL WHEEL DRIVE

**S/N: BXC1-UP; DSX1-UP**

**PART OF 237-6463 DRIVE AR-BACKHOE LOADER**

**SMCS-1408, 4334** **i01734161**

| NOTE | REF NO | GRAPHIC REF | PART NUMBER | QTY | PART NAME 1 2 3 4 5 6 (PRODUCT LEVEL) | SEE PAGE |
|---|---|---|---|---|---|---|
| | 1 | 1 | **3S-2093** | 1 | STRAP-CABLE | |
| | 2 | 1 | **106-8704** | 1 | SUPPRESSOR AS-ARC | |
| | | 1 | **102-8802** | 1 | KIT-RECEPTACLE (2 PIN) | |
| | | | | | (KIT INCLUDES RECEPTACLE AS AND WEDGE) | |
| | | 1 | **3E-3365** | 1 | WEDGE-RECEPTACLE LOCK (2 PIN) | |
| | | 1 | **8T-8729** | 2 | PIN-CONNECTOR | |
| | 3 | 1 | **141-2759** | 1 | FUSE (5 AMP) | |
| | 4 | 1 | **146-9439** | 1 | RELAY AS (12 VOLT) | |
| | 5 | 1 | **169-0598** | 1 | SWITCH AS (ALL WHEEL DRIVE) | |
| | | 1 | **111-7899** | 1 | GASKET | |

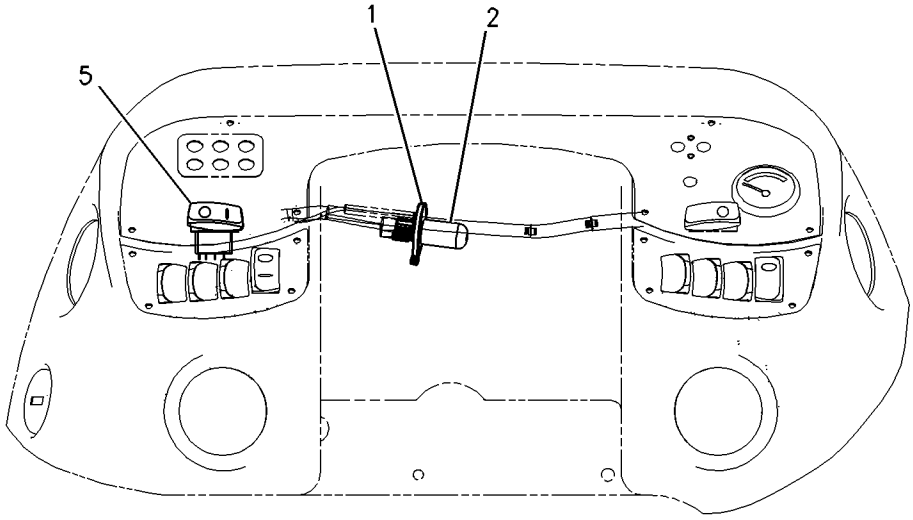


FRONT VIEW

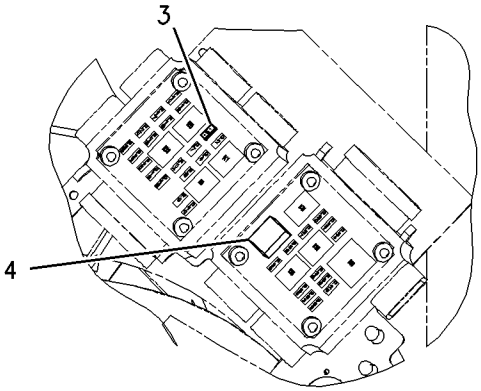


FUSE PANEL

GRAPHIC #1 **<END>** g00732887

# POWER TRAIN

## 231-0705 AXLE GP-DRIVE & STEERING

**S/N: BXC1-UP; DSX1-UP**

**PART OF 237-6463 DRIVE AR-BACKHOE LOADER**

**SMCS-3020, 3250, 3258, 3259, 3260, 3264, 3278, 4050, 4313** **i01994447**

| NOTE | REF NO | GRAPHIC REF | PART NUMBER | QTY | PART NAME 1 2 3 4 5 6 (PRODUCT LEVEL) | SEE PAGE |
|---|---|---|---|---|---|---|
| | 1 | 1 | **154-5404** | 2 | BEARING | |
| | 2 | 1 | **199-0639** | 4 | SCREW (WHEEL HUB) | |
| | 3 | 1 | **207-4254** | 6 | BOLT | |
| | 4 | 1 | **207-4258** | 2 | NUT | |
| | 5 | 1 | **219-8798** | 2 | SEAL-LIP TYPE | |
| | 6 | 1 | **209-9875** | 2 | DOWEL | |
| | 7 | 1 | **197-9155** | 1 | BREATHER (AXLE) | |
| | 8 | 1 | **209-7456** | 2 | BUSHING | |
| | 9 | 1 | **211-6735** | 2 | SEAL-O-RING | |
| | 10 | 1 | **214-5097** | 1 | CYLINDER GP-STEERING | |
| | | 1 | **215-2023** | 1 | KIT-SEAL | |
| | 11 | 1 | **152-6144** | 3 | PLUG AS-MAGNETIC | |
| | 12 | 1 | **208-0321** | 11 | BOLT-FLANGE HEAD (M12X1.75X33MM) | |
| | 13 | 1 | **209-7464** | 2 | SEAL | |
| M | 14 | 1 | **199-0683** | 16 | BOLT (M16X2X38MM) | |
| | 15 | 1 | **210-5937** | 2 | WASHER (46X66X3MM THK) | |
| B | 16 | 1 | **198-7841** | 8 | SHIM (.15MM THK) | |
| B | 17 | 1 | **198-7842** | 4 | SHIM (.2MM THK) | |
| B | 18 | 1 | **198-7843** | 4 | SHIM (.5MM THK) | |
| Y | 19 | 1 | **238-5258** | 1 | DIFFERENTIAL & BEVEL GEAR GP | 227 |
| | 20 | 1 | **210-5942** | 2 | RING | |
| | 21 | 1 | **209-9883** | 1 | HOUSING | |
| | 22 | 1 | **210-5946** | 2 | SHAFT GP-AXLE | |
| | | | | | (EACH INCLUDES) | |
| | | 1 | **174-4643** | 4 | KIT-SPIDER | |
| | | 1 | **174-4671** | 1 | YOKE | |
| | 23 | 1 | **209-9886** | 2 | TIE ROD GP | |
| | | | | | (EACH INCLUDES) | |
| | 23A | 1 | **217-2883** | 1 | TIE ROD | |
| | 23B | 1 | **217-2884** | 1 | BALL JOINT | |
| | 23C | 1 | **217-2885** | 1 | NUT | |
| | 24 | 1 | **209-9887** | 1 | BUSHING | |
| | 25 | 1 | **210-5947** | 2 | WASHER-THRUST (44.6X58X7MM THK) | |
| | 26 | 1 | **216-7473** | 4 | PIN GP-AXLE | |
| | | | | | (EACH INCLUDES) | |
| | 26A | 1 | **198-7823** | 1 | BEARING AS | |
| | 26B | 1 | **198-7825** | 1 | SEAL | |
| | 26C | 1 | **198-7838** | 1 | PIN | |
| Y | 27 | 1 | **210-5924** | 2 | PLANETARY GP-FINAL DRIVE | 238 |
| Y | 28 | 1 | **209-9884** | 1 | HOUSING & FLANGE GP-AXLE (RH) | 234 |
| Y | 29 | 1 | **209-9885** | 1 | HOUSING & FLANGE GP-AXLE (LH) | 235 |
| | 30 | 1 | **069-4707** | 1 | SEALANT (GASKET) | |

B-USE AS REQUIRED
M-METRIC PART
Y-SEPARATE ILLUSTRATION

## 231-0705 AXLE GP-DRIVE & STEERING *(contd. )* i01994447

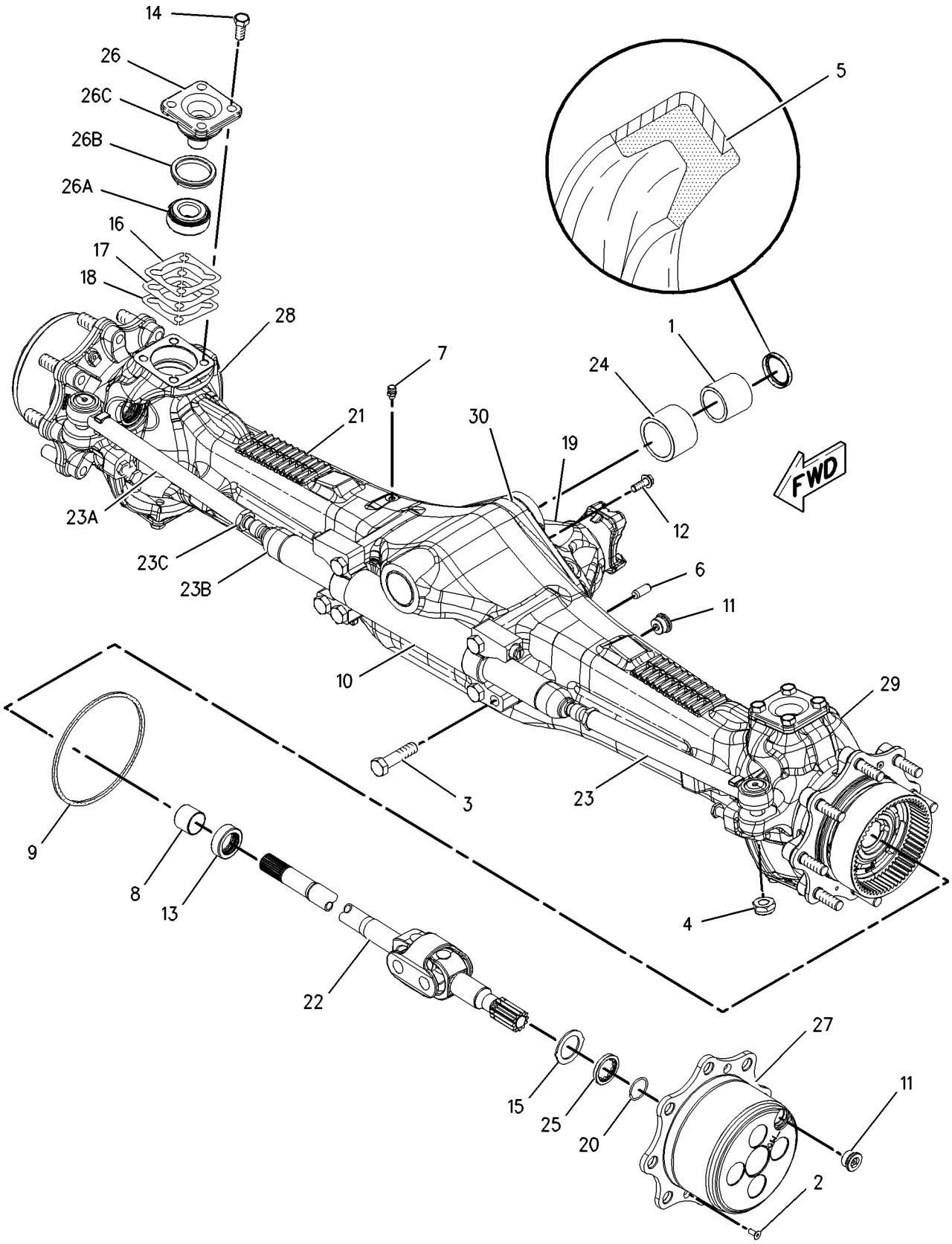


GRAPHIC #1 **<END>** g00997535

# POWER TRAIN

## 156-2857 AXLE GP-REAR

**S/N: BXC1-UP; DSX1-UP**

**PART OF 237-6463 DRIVE AR-BACKHOE LOADER**

**SMCS-3278, 3282** **i02005300**

| NOTE | REF NO | GRAPHIC REF | PART NUMBER | QTY | PART NAME 1 2 3 4 5 6 (PRODUCT LEVEL) | SEE PAGE |
|---|---|---|---|---|---|---|
| | 1 | 1 | **118-5837** | 2 | SHAFT AS | |
| | | | | | (EACH INCLUDES) | |
| | 1A | 1 | **9R-5219** | 8 | BOLT-SPECIAL | |
| | 2 | 2 | **9R-2407** | 1 | RETAINER AS | |
| | 2A | 2 | **3N-6408** | 1 | CUP-BEARING (TAPERED ROLLER BEARING) | |
| | 2B | 2 | **4K-5843** | 1 | CUP-BEARING (TAPERED ROLLER BEARING) | |
| | 3 | 1 | **156-1928** | 1 | HOUSING AS-LH | |
| | 3A | 1 | **6Y-7652** | 1 | CUP-BEARING (TAPERED ROLLER BEARING) | |
| | 3B | 1 | **8S-9151** | 1 | CUP-BEARING (TAPERED ROLLER BEARING) | |
| | 3C | 1 | **156-1929** | 2 | STUD | |
| | 3D | 1 | **156-1930** | 1 | GEAR-PLANET RING (56 TEETH) | |
| | 4 | 1 | **156-2571** | 1 | HOUSING AS-RH | |
| | 4A | 1 | **6Y-7652** | 1 | CUP-BEARING (TAPERED ROLLER BEARING) | |
| | 4B | 1 | **8S-9151** | 1 | CUP-BEARING (TAPERED ROLLER BEARING) | |
| | 4C | 1 | **156-1929** | 2 | STUD | |
| | 4D | 1 | **156-1930** | 1 | GEAR-PLANET RING (56 TEETH) | |
| | 5 | 1 | **186-4117** | 2 | CARRIER AS | |
| | | | | | (EACH INCLUDES) | |
| | 5A | 1 | **7T-6652** | 1 | CONE-BEARING (TAPERED ROLLER BEARING) (TAPERED ROLLER BEARING) | |
| | 5B | 1 | **9R-2417** | 3 | WASHER (33.07X48.38X1.06MM THK) | |
| | 5C | 1 | **9R-2418** | 6 | WASHER (32.94X57.21X.78MM THK) | |
| | 5D | 1 | **9R-2419** | 3 | KIT-BEARING | |
| | 5E | 1 | **9R-2420** | 1 | RETAINER | |
| | 5F | 1 | **9R-2421** | 3 | SHAFT | |
| | 5G | 1 | **186-4118** | 3 | GEAR-PLANET (20 TEETH) | |
| | 6 | 1 | **9F-2167** | 2 | SCREW-PURGE | |
| | 7 | 1 | **9R-0883** | 1 | PIN | |
| | 8 | 1 | **9R-0823** | 1 | LEVER AS | |
| B | 9 | 2 | **9R-2427** | 1 | SHIM (0.965MM THK) | |
| B | | 2 | **9R-2428** | 1 | SHIM (1.118MM THK) | |
| B | | 2 | **9R-2429** | 1 | SHIM (1.270MM THK) | |
| B | | 2 | **9R-2430** | 1 | SHIM (1.422MM THK) | |
| B | | 2 | **9R-2431** | 1 | SHIM (1.575MM THK) | |
| B | | 2 | **9R-2432** | 1 | SHIM (1.727MM THK) | |
| B | | 2 | **9R-2433** | 1 | SHIM (1.880MM THK) | |
| B | | 2 | **9R-2434** | 1 | SHIM (2.032MM THK) | |
| | 10 | 1 | **9R-2425** | 2 | WASHER (23.088X69.6X9.52MM THK) | |
| | 11 | 1 | **156-2572** | 1 | HOUSING-REAR BRAKE (RH) | |
| | 12 | 1 | **9R-9410** | 2 | SEAL-REAR BRAKE | |
| | 13 | 1 | **9R-9409** | 2 | SEAL-REAR BRAKE | |
| | 14 | 1 | **9R-9408** | 2 | PISTON-REAR BRAKE | |
| B | 15 | 2 | **9R-2446** | 1 | SPACER (45.86X50.98X31.858MM THK) | |
| B | | 2 | **9R-2447** | 1 | SPACER (45.86X50.98X31.908MM THK) | |
| B | | 2 | **9R-2448** | 1 | SPACER (45.86X50.98X31.959MM THK) | |
| B | | 2 | **9R-2449** | 1 | SPACER (45.86X50.98X32.010MM THK) | |
| B | | 2 | **9R-2450** | 1 | SPACER (45.86X50.98X32.061MM THK) | |
| B | | 2 | **9R-2451** | 1 | SPACER (45.86X50.98X32.112MM THK) | |
| B | | 2 | **9R-2452** | 1 | SPACER (45.86X50.98X32.162MM THK) | |
| B | | 2 | **9R-2453** | 1 | SPACER (45.86X50.98X32.213MM THK) | |
| B | | 2 | **9R-2454** | 1 | SPACER (45.86X50.98X32.264MM THK) | |
| B | | 2 | **9R-2455** | 1 | SPACER (45.86X50.98X32.315MM THK) | |
| B | | 2 | **9R-2456** | 1 | SPACER (45.86X50.98X32.366MM THK) | |
| B | | 2 | **9R-2457** | 1 | SPACER (45.86X50.98X32.416MM THK) | |
| B | | 2 | **9R-2458** | 1 | SPACER (45.86X50.98X32.467MM THK) | |
| B | | 2 | **9R-2459** | 1 | SPACER (45.86X50.98X32.518MM THK) | |

## 156-2857 AXLE GP-REAR *(contd. )* i02005300

| NOTE | REF NO | GRAPHIC REF | PART NUMBER | QTY | PART NAME 1 2 3 4 5 6 (PRODUCT LEVEL) | SEE PAGE |
|---|---|---|---|---|---|---|
| B | | 2 | **9R-2460** | 1 | SPACER (45.86X50.98X32.569MM THK) | |
| | 16 | 1 | **230-4017** | 8 | DISC-BRAKE | |
| | 17 | 1 | **9R-2474** | 2 | PIN | |
| | 18 | 1 | **9R-9401** | 8 | PLATE | |
| | 19 | 1 | **8S-4740** | 12 | BOLT (9/16-12X5 IN) | |
| | 20 | 1 | **9R-9398** | 2 | MANIFOLD-BRAKE TUBE | |
| | 21 | 1 | **8H-1607** | 2 | SEAL-O-RING | |
| | 22 | 1 | **9R-2424** | 2 | GEAR (16 TEETH) | |
| | 23 | 1 | **8M-8157** | 4 | SEAL-O-RING | |
| | 24 | 2 | **2A-4576** | 1 | CUP-BEARING (TAPERED ROLLER BEARING) | |
| | 25 | 2 | **5L-9656** | 1 | CONE-BEARING (TAPERED ROLLER BEARING) | |
| | 26 | 1 | **9X-8880** | 25 | BOLT (5/8-11X2 IN) | |
| | 27 | 2 | **9R-2508** | 1 | HOUSING | |
| | 28 | 2 | **113-1147** | 1 | FLANGE | |
| | 29 | 2 | **9R-2497** | 1 | SEAL | |
| | 30 | 2 | **9R-2501** | 1 | WASHER (32.5X60.5X5.6MM THK) (5.6MM THK) | |
| | 31 | 2 | **9R-2502** | 1 | NUT (1 1/4-18 THD) | |
| | 32 | 2 | **3B-5302** | 1 | PIN-COTTER | |
| | 33 | 2 | **9R-2498** | 1 | RETAINER | |
| | 34 | 2 | **3B-4509** | 6 | LOCKWASHER | |
| | 35 | 2 | **3K-3379** | 6 | BOLT (9/16-12X1IN) | |
| | 36 | 1 | **9X-8883** | 1 | BOLT (5/8-11X2.75 IN) | |
| | 37 | 1 | **5L-9018** | 4 | BOLT-SOCKET HEAD (1/4X20X1.75 IN) | |
| | 38 | 1 | **8T-6760** | 2 | PLUG-PIPE | |
| | 39 | 2 | **9R-2499** | 1 | SEAL AS | |
| | 40 | 2 | **9R-2496** | 1 | SEAL | |
| | 41 | 2 | **7T-6653** | 1 | CONE-BEARING (TAPERED ROLLER BEARING) | |
| | 42 | 1 | **118-5839** | 2 | SEAL-REAR AXLE | |
| | 43 | 2 | **9R-2512** | 1 | SEAL | |
| | 44 | 1 | **030-1957** | 2 | CONE-BEARING (TAPERED ROLLER BEARING) | |
| | 45 | 2 | **7T-6654** | 1 | CONE-BEARING (TAPERED ROLLER BEARING) | |
| | 46 | 1 | **9R-2505** | 1 | SEAL | |
| | 47 | 1 | **9R-2504** | 1 | SHAFT | |
| M | 48 | 1 | **9R-2507** | 1 | SCREW-SPECIAL | |
| | 49 | 2 | **7T-7621** | 1 | BEARING AS | |
| | 50 | 2 | **9R-2494** | 1 | RING | |
| | 51 | 2 | **9R-2480** | 1 | CASE AS | |
| | 52 | 2 | **2S-0480** | 1 | CUP-BEARING (TAPERED ROLLER BEARING) | |
| | 53 | 2 | **2S-0479** | 1 | CONE-BEARING (TAPERED ROLLER BEARING) | |
| | 54 | 1 | **9R-2506** | 1 | FORK | |
| | 55 | 2 | **9R-2492** | 1 | WASHER (64.389X78.74X3.124MM THK) (3.1MM THK) | |
| | 56 | 2 | **9R-2493** | 1 | RING | |
| | 57 | 2 | **9R-2488** | 1 | GEAR (16 TEETH) | |
| | 58 | 2 | **9R-2482** | 1 | COUPLING | |
| | 59 | 1 | **156-1934** | 1 | HOUSING-BRAKE | |
| | 60 | 2 | **9R-2486** | 1 | SPRING | |
| | 61 | 2 | **9R-2483** | 1 | ADAPTER | |
| | 62 | 2 | **9R-2484** | 2 | BUSHING-TERMINAL | |
| | 63 | 2 | **9R-2490** | 2 | WASHER (76.2X101.6X1.5MM THK) | |
| | 64 | 2 | **9R-2491** | 1 | SPIDER | |
| | 65 | 2 | **9R-9403** | 4 | PINION | |
| | 66 | 2 | **9R-2489** | 4 | WASHER-SPRING | |
| | 67 | 2 | **9R-2485** | 8 | BOLT (1/2-13X1.85IN) | |
| | 68 | 1 | **9R-2495** | 2 | SEAL | |
| | 69 | 2 | **118-9117** | 1 | GEAR SET | |
| M | 70 | 2 | **9R-6671** | 12 | BOLT (1/2-20X1.62IN) | |
| | 71 | 2 | **2M-2570** | 12 | LOCKNUT | |
| | 72 | 2 | **9R-2503** | 1 | BLOCK | |
| | 73 | 1 | **2L-6267** | 1 | LOCKNUT | |

## 156-2857 AXLE GP-REAR *(contd. )*

i02005300

| NOTE | REF NO | GRAPHIC REF | PART NUMBER | QTY | PART NAME 1 2 3 4 5 6 (PRODUCT LEVEL) | SEE PAGE |
|---|---|---|---|---|---|---|
| | 74 | 2 | **0T-0318** | 2 | BOLT (7/16-14X1 IN) | |
| | 75 | 2 | **9R-2487** | 1 | GEAR (16 TEETH) | |
| B | 76 | 1 | **9R-2435** | 2 | SPACER (22.86X53.85X1.25MM THK) | |
| B | | 1 | **9R-2436** | 2 | SPACER (22.86X53.85X1.35MM THK) | |
| B | | 1 | **9R-2437** | 2 | SPACER (22.86X53.85X1.45MM THK) | |
| B | | 1 | **9R-2438** | 2 | SPACER (22.86X53.85X1.55MM THK) | |
| B | | 1 | **9R-2439** | 2 | SPACER (22.86X53.85X1.65MM THK) | |
| B | | 1 | **9R-2440** | 2 | SPACER (22.86X53.85X1.75MM THK) | |
| B | | 1 | **9R-2441** | 2 | SPACER (22.86X53.85X1.85MM THK) | |
| B | | 1 | **9R-2442** | 2 | SPACER (22.86X53.85X1.96MM THK) | |
| B | | 1 | **9R-2443** | 2 | SPACER (22.86X53.85X2.06MM THK) | |
| B | | 1 | **9R-2444** | 2 | SPACER (22.86X53.85X2.16MM THK) | |
| B | | 1 | **9R-2445** | 2 | SPACER (22.86X53.85X2.26MM THK) | |
| | 77 | 2 | **9R-6602** | 2 | PLUG-MAGNETIC | |
| | 78 | 1 | **5P-0540** | 4 | NUT-HEX FULL (9/16-18 THD) | |
| | 79 | 1 | **156-2573** | 1 | HOUSING-BRAKE | |
| | 80 | 1 | **156-1933** | 1 | HOUSING-REAR BRAKE (LH) | |
| | 81 | 1 | **9R-2426** | 2 | LOCK | |
| M | 82 | 1 | **9R-2466** | 2 | BOLT (7/8-14X1.625IN) | |

B-USE AS REQUIRED
M-METRIC PART

## 156-2857 AXLE GP-REAR *(contd. )*

i02005300

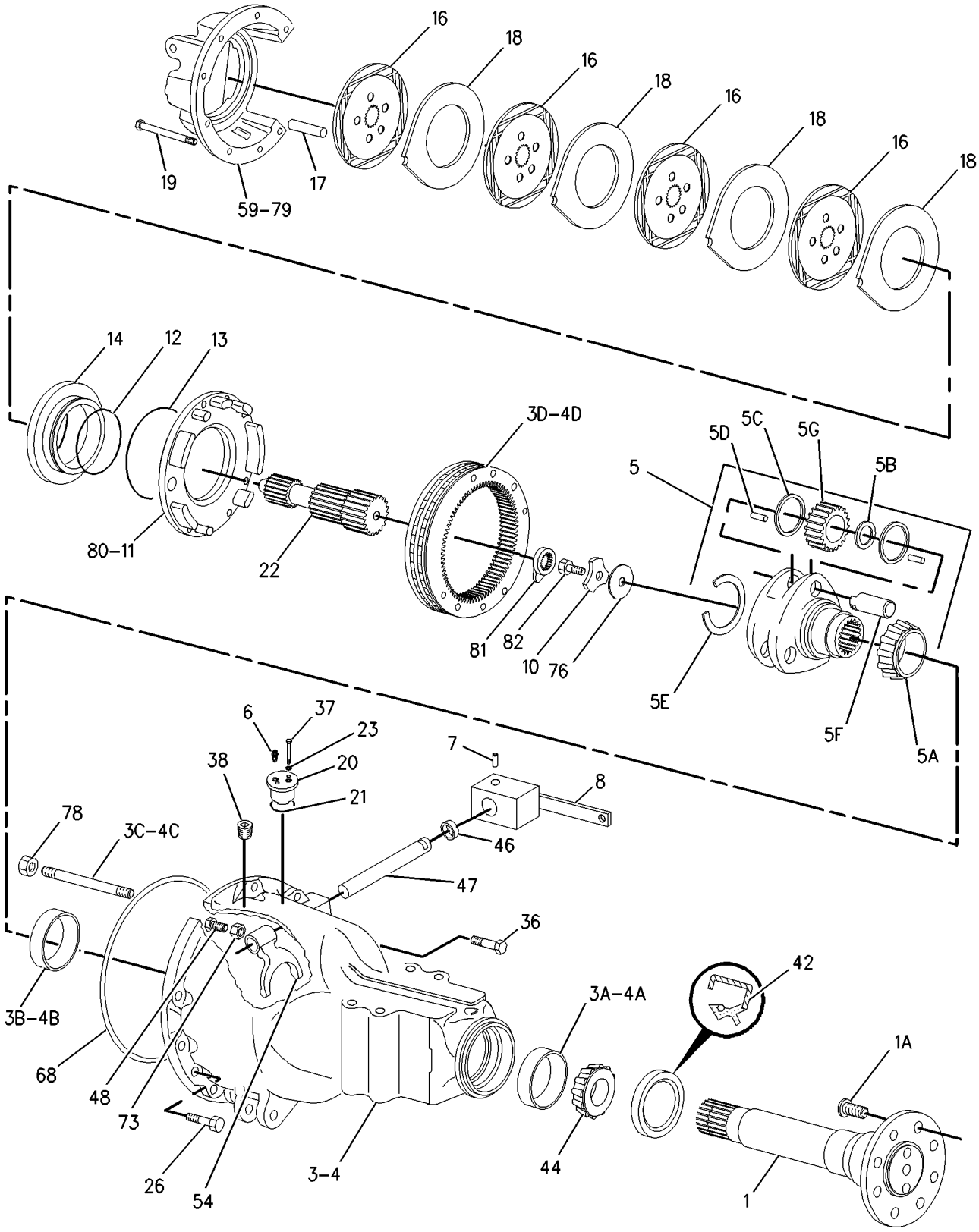


GRAPHIC #1

g00986345

**156-2857 AXLE GP-REAR** *(contd. )* **i02005300**

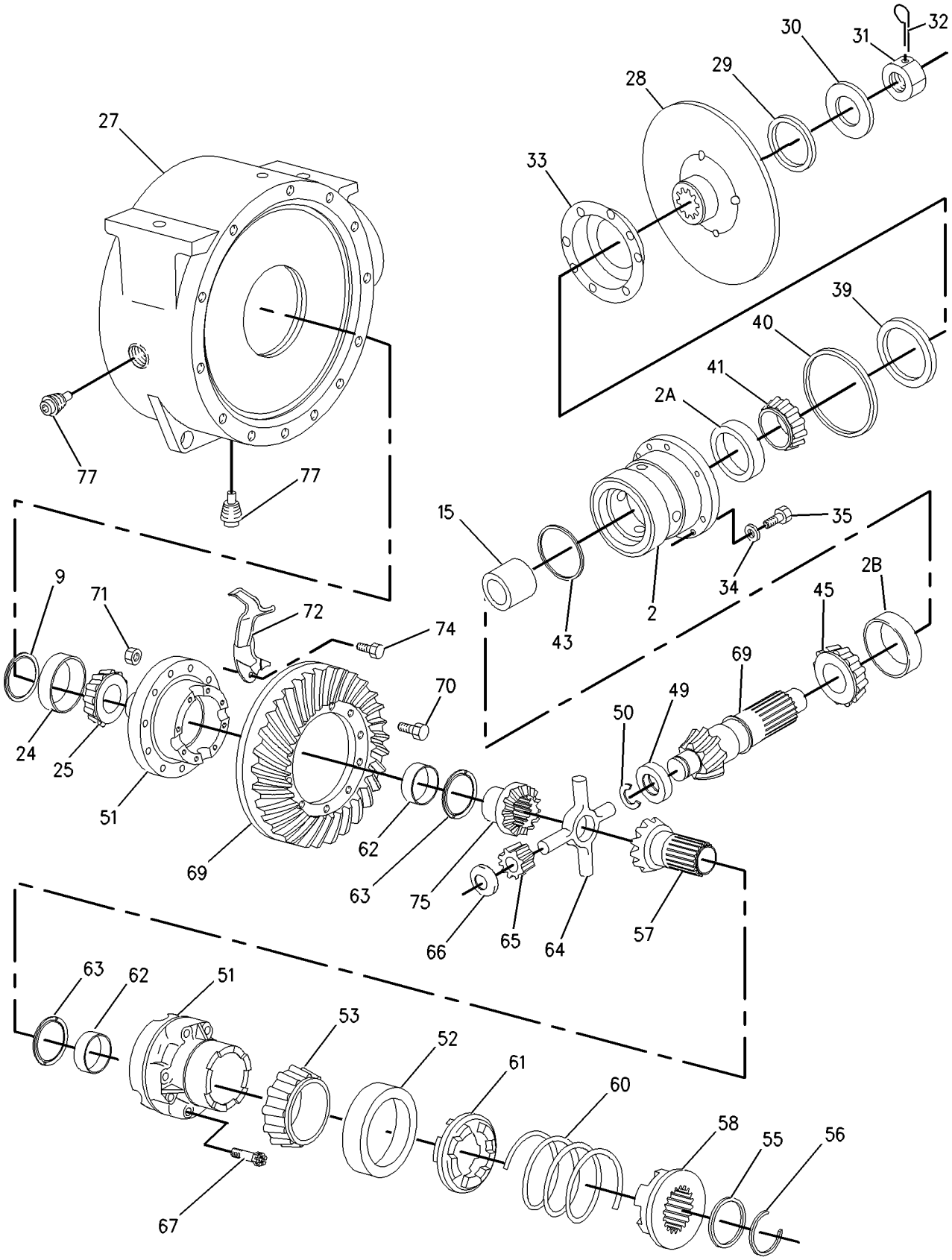


GRAPHIC #2 **<END>** g00986346

# POWER TRAIN

## *191-9114* CONTROL GP-DIFFERENTIAL LOCK

**S/N: BXC1-UP; DSX1-UP**

**PART OF 184-7970 POWER TRAIN AR**

**SMCS-3264, 3272, 3273** **i01956939**

| NOTE | REF NO | GRAPHIC REF | PART NUMBER | QTY | PART NAME 1 2 3 4 5 6 (PRODUCT LEVEL) | SEE PAGE |
|---|---|---|---|---|---|---|
| | 1 | 1 | **9R-5567** | 1 | PLATE AS | |
| M | 2 | 1 | **8T-4244** | 1 | NUT (M12X1.75 THD) | |
| | 3 | 1 | **5P-0372** | 2 | LOCK PIN | |
| | 4 | 1 | **8B-1419** | 1 | PIN-CLEVIS | |
| | 5 | 1 | **191-9113** | 1 | ROD AS | |
| C | 6 | 1 | **8T-4815** | 1 | ROD END | |
| | 7 | 1 | **8C-4987** | 1 | PIN-CLEVIS | |
| M | 8 | 1 | **8T-4133** | 1 | NUT (M10X1.5 THD) | |
| | 9 | 1 | **9R-3051** | 1 | ROD | |
| | 10 | 1 | **9R-2806** | 1 | PIN | |
| | 11 | 1 | **9R-2807** | 1 | CLIP | |
| | 12 | 1 | **103-4867** | 1 | SPRING | |
| | 13 | 1 | **9R-1581** | 1 | BOOT | |
| C | 14 | 1 | **8T-5063** | 1 | ROD END | |

C-CHANGE FROM PREVIOUS TYPE
M-METRIC PART

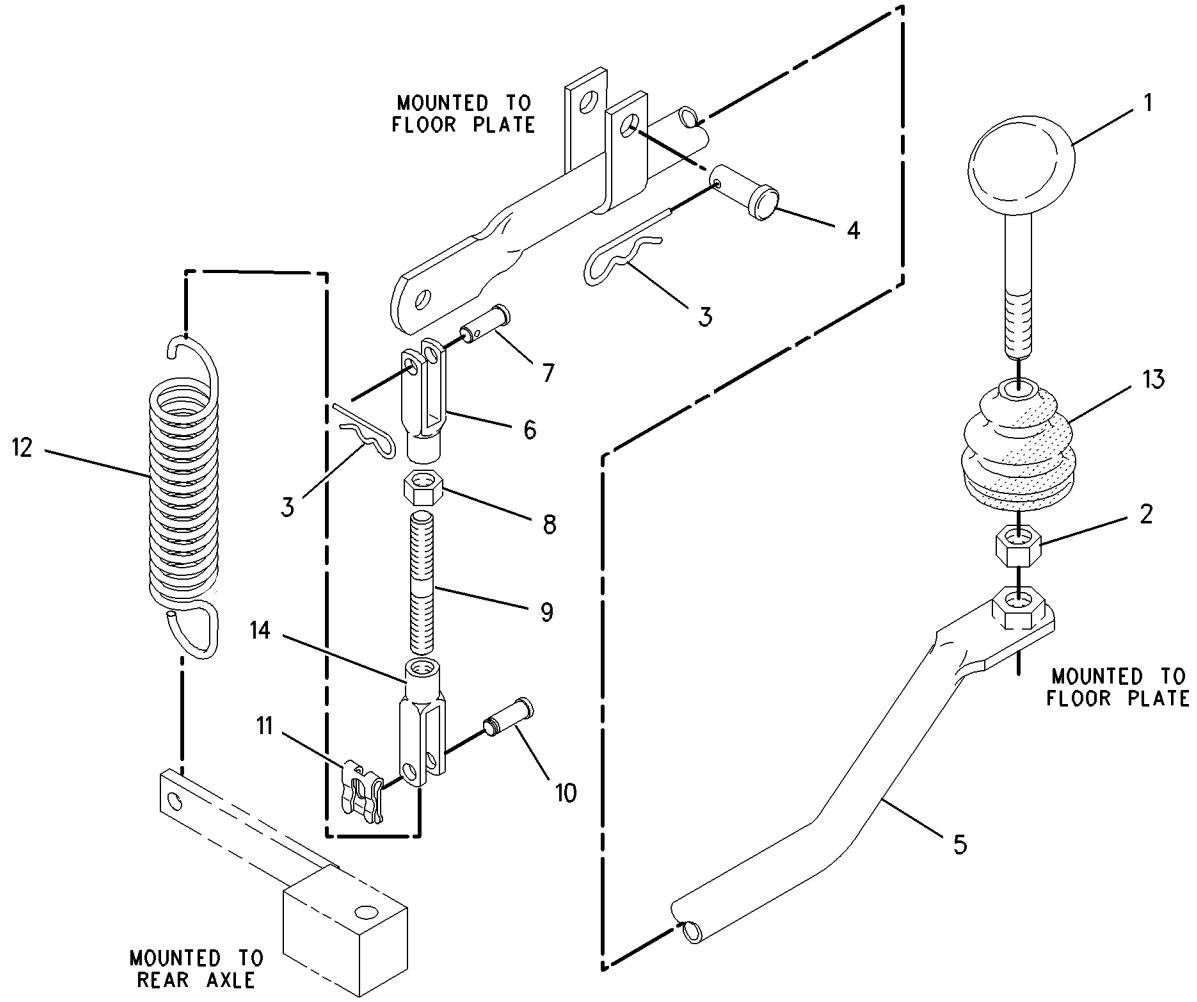


GRAPHIC #1 **<END>** g00995446

# POWER TRAIN

## *164-1130* CONTROL GP-TRANSMISSION

**S/N: BXC1-UP; DSX1-UP**
**PART OF 214-7012, 214-7014 POWER TRAIN AR**
**AN ATTACHMENT**

**SMCS-3065** **i01984704**

| NOTE | REF NO | GRAPHIC REF | PART NUMBER | QTY | PART NAME 1 2 3 4 5 6 (PRODUCT LEVEL) | SEE PAGE |
|---|---|---|---|---|---|---|
| | 1 | 1 | **102-8802** | 1 | KIT-RECEPTACLE (2-PIN) | |
| | 2 | 1 | **3E-3365** | 1 | WEDGE-RECEPTACLE LOCK (2 PIN) | |
| | 3 | 1 | **9R-1766** | 1 | KNOB (BOTTOM) | |
| | 4 | 1 | **9R-1767** | 1 | BOOT | |
| | 5 | 1 | **9R-9868** | 1 | SWITCH AS-PUSH BUTTON (TRANSMISSION NEUTRAL) | |
| | | 1 | **9X-3401** | 2 | PIN-CONNECTOR | |
| | 6 | 1 | **107-5591** | 1 | NUT-JAM (3/4-16 THD) | |
| | 7 | 1 | **164-1113** | 1 | PLATE | |
| | 8 | 1 | **164-1153** | 1 | KNOB (TOP) | |
| | 9 | 1 | **164-1197** | 1 | ROD AS | |
| | 10 | 1 | **164-1365** | 1 | BOOT | |
| | 11 | 1 | **164-1368** | 4 | CLIP | |
| | 12 | 1 | **174-6640** | 1 | CONTROL GP-TRANSMISSION | |
| | 13 | 1 | **8T-4223** | 1 | WASHER-HARD (13.5X25.5X3MM THK) | |
| M | 14 | 1 | **8T-4956** | 1 | BOLT (M12X1.75X35MM) | |
| | 15 | 1 | **8T-9501** | 2 | SCREW (10-16X.75 IN) | |

M-METRIC PART

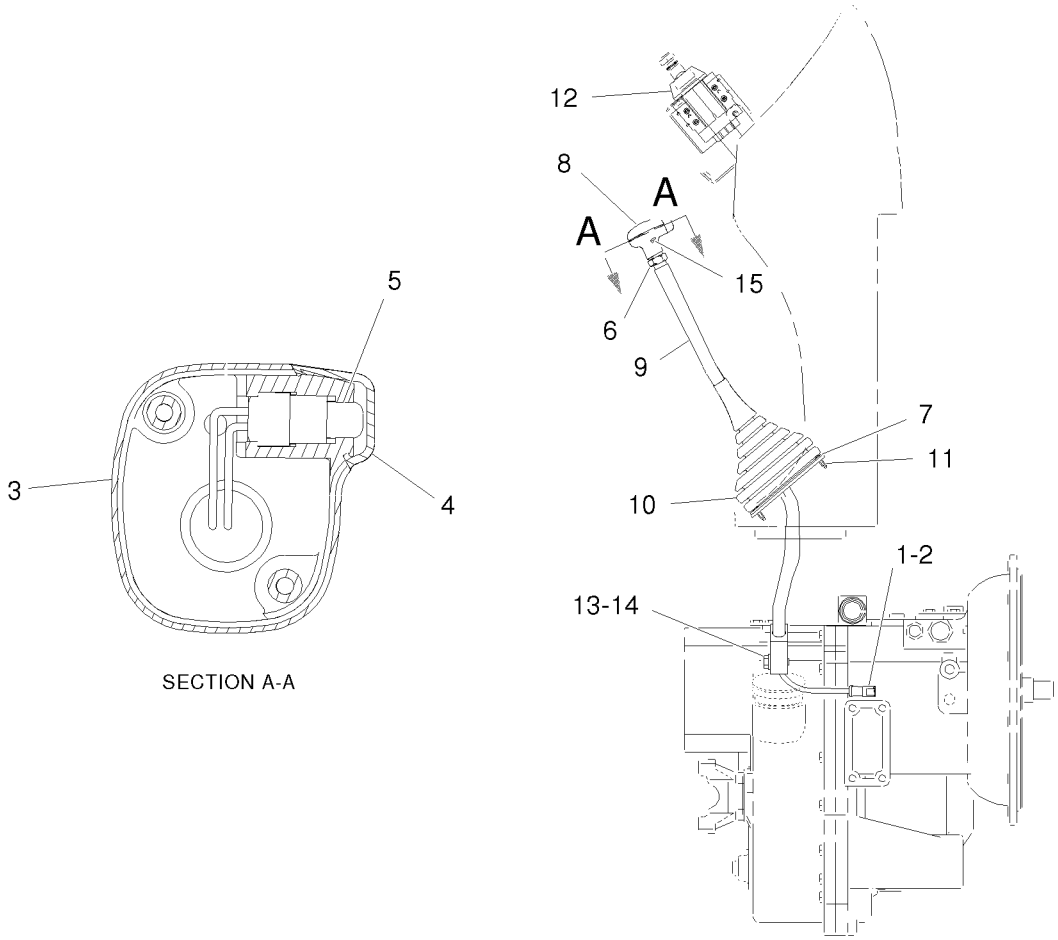


GRAPHIC #1 **<END>** g01028519

# *238-5258* DIFFERENTIAL & BEVEL GEAR GP

**S/N: BXC1-UP; DSX1-UP**

**PART OF 231-0705 AXLE GP-DRIVE & STEERING**

**SMCS-3256, 3258, 3281, 3283, 3284** **i02005301**

| NOTE | REF NO | GRAPHIC REF | PART NUMBER | QTY | PART NAME 1 2 3 4 5 6 (PRODUCT LEVEL) | SEE PAGE |
|---|---|---|---|---|---|---|
| | 1 | 1 | **4J-0520** | 1 | SEAL-O-RING | |
| | 2 | 1 | **216-4457** | 1 | SEAL | |
| | 3 | 1 | **216-4458** | 2 | BEARING | |
| | 4 | 1 | **136-7808** | 1 | BEARING AS-TAPERED ROLLER | |
| | 5 | 1 | **216-4461** | 1 | BEARING | |
| | 6 | 1 | **209-7454** | 2 | NUT (M94X2 THD) | |
| | 7 | 1 | **152-6144** | 1 | PLUG AS-MAGNETIC | |
| | 8 | 1 | **209-7462** | 2 | WASHER (40X50X.06MM THK) | |
| | 9 | 1 | **209-7463** | 1 | SLEEVE (COLLAPSIBLE) | |
| M | 10 | 1 | **199-0695** | 2 | BOLT (M6X1X14MM) | |
| | 11 | 1 | **209-7472** | 1 | NUT (M24X1.5 THD) | |
| | 12 | 1 | **216-4465** | 1 | WASHER (24.5X52X10MM THK) | |
| | 13 | 1 | **216-4464** | 1 | YOKE | |
| | 14 | 1 | **199-0858** | 2 | RETAINER | |
| Y | 15 | 1 | **216-9498** | 1 | DIFFERENTIAL GP | 229 |
| | 16 | 1 | **238-5257** | 1 | GEAR GP-BEVEL | |
| | 17 | 1 | **217-2880** | 4 | DOWEL | |
| | 18 | 1 | **216-5515** | 1 | HOUSING GP-DIFFERENTIAL | |
| | 18A | 1 | **208-0322** | 4 | BOLT-FLANGE HEAD | |
| B | 19 | 1 | **209-7473** | 1 | SHIM (2.5MM THK) | |
| B | | | **219-8751** | 1 | SHIM (2.6MM THK) | |
| B | | | **219-8752** | 1 | SHIM (2.7MM THK) | |
| B | | | **219-8753** | 1 | SHIM (2.8MM THK) | |
| B | | | **219-8754** | 1 | SHIM (2.9MM THK) | |
| B | | | **219-8755** | 1 | SHIM (3.0MM THK) | |
| B | | | **219-8756** | 1 | SHIM (3.1MM THK) | |
| B | | | **219-8757** | 1 | SHIM (3.2MM THK) | |
| B | | | **219-8758** | 1 | SHIM (3.3MM THK) | |
| B | | | **219-8759** | 1 | SHIM (3.4MM THK) | |

B-USE AS REQUIRED
M-METRIC PART
Y-SEPARATE ILLUSTRATION

*238-5258* **DIFFERENTIAL & BEVEL GEAR GP** *(contd.)* **i02005301**

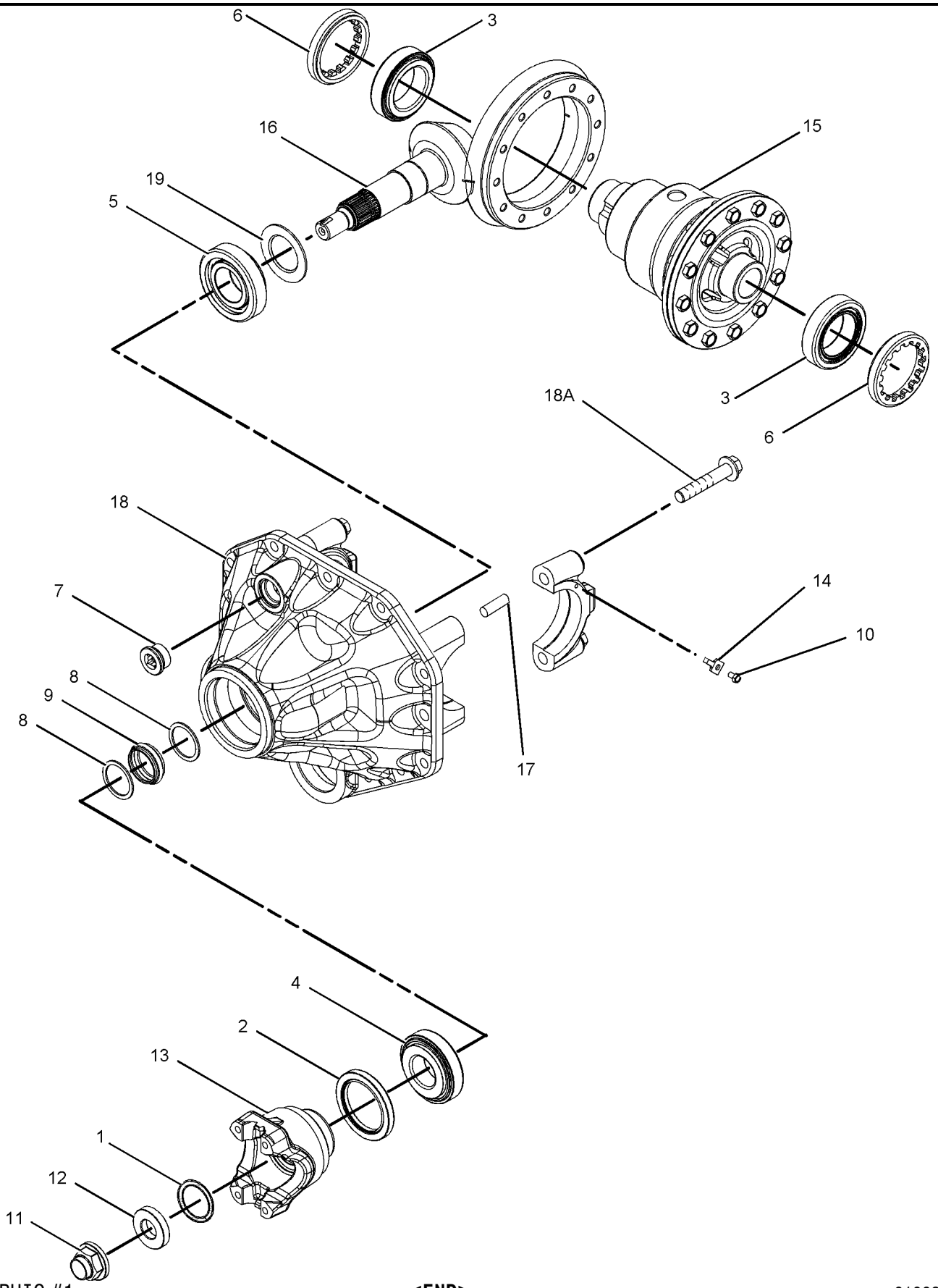


GRAPHIC #1 **<END>** g01008372

# POWER TRAIN

## *216-9498* DIFFERENTIAL GP

**S/N: BXC1-UP; DSX1-UP**

**PART OF 238-5258 DIFFERENTIAL & BEVEL GEAR GP**

**SMCS-3258** **i02005424**

| NOTE | REF NO | GRAPHIC REF | PART NUMBER | QTY | PART NAME 1 2 3 4 5 6 (PRODUCT LEVEL) | SEE PAGE |
|---|---|---|---|---|---|---|
| | 1 | 1 | **216-8687** | 1 | COVER | |
| | 2 | 1 | **216-8689** | 1 | HOUSING-DIFFERENTIAL | |
| | 3 | 1 | **229-5093** | 2 | WASHER-THRUST (49X72X1.5MM THK) | |
| M | 4 | 1 | **144-6734** | 12 | BOLT (M10X1.5X30MM) | |
| | | | | | AVAILABLE REPAIR KIT(S): | |
| | | | **216-8700** | | GEAR GP-BEVEL (KIT) | |
| | | | | | (INCLUDES PIN,WASHERS,PIN,DISC AND GEARS) | |

M-METRIC PART

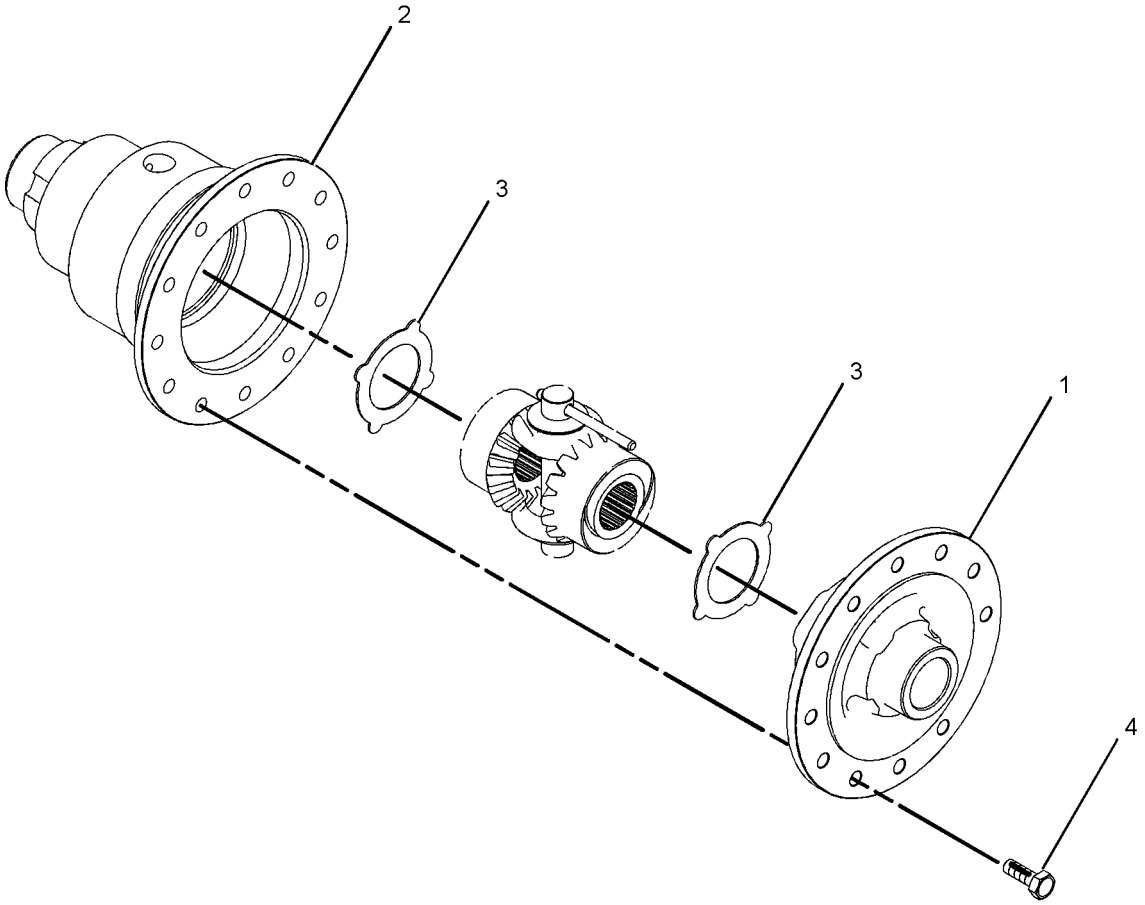


GRAPHIC #1 **<END>** g01008123

# POWER TRAIN

## *237-6463* DRIVE AR-BACKHOE LOADER–2 WHEEL STEER–ALL WHEEL DRIVE

**S/N: BXC1-UP; DSX1-UP**

**PART OF 214-6993, 214-6994 COMMON AR**

**SMCS-3278, 4313** **i02006242**

| NOTE | PART NUMBER | QTY | PART NAME 1 2 3 4 5 6 (PRODUCT LEVEL) | SEE PAGE |
|---|---|---|---|---|
| Y | **231-0705** | 1 | AXLE GP-DRIVE & STEERING (FRONT) | 218 |
| Y | **156-2857** | 1 | AXLE GP-REAR | 220 |
| | **202-5710** | 1 | FILM-IDENTIFICATION (FUSE PANEL) | |
| | **231-9352** | 1 | FILM-IDENTIFICATION (FUSE PANEL) | |
| Y | *190-8954* | 1 | LINES GP-PUMP | 477 |
| Y | *202-5711* | 1 | LINES GP-STEERING | 300 |
| Y | *202-6199* | 1 | MOUNTING GP-AXLE | 237 |
| Y | *238-8550* | 1 | PUMP GP-METERING | 303 |
| Y | *186-0309* | 1 | WIRING GP-STEERING (AWD) | 217 |

Y-SEPARATE ILLUSTRATION

**<END>**

# *111-7907* DRIVE GP-FLEXIBLE COUPLING

**S/N: BXC1-UP; DSX1-UP**

**PART OF 185-7586 TRANSMISSION AR-DIRECT DRIVE, 185-7587 TRANSMISSION AR-POWER SHIFT**

**AN ATTACHMENT**

**SMCS-3252** **i01053593**

| NOTE | REF NO | GRAPHIC REF | PART NUMBER | QTY | PART NAME 1 2 3 4 5 6 (PRODUCT LEVEL) | SEE PAGE |
|---|---|---|---|---|---|---|
| M | 1 | 1 | **8T-4200** | 8 | BOLT (M8X1.25X16MM) | |
| M | 2 | 1 | **6V-8455** | 6 | BOLT (M10X1.5X16MM) | |
| | 3 | 1 | **117-9713** | 1 | PLATE-CONVERTER REINFORCEMENT | |
| | 4 | 1 | **8T-4224** | 8 | WASHER-HARD (2MM THK) | |
| | 5 | 1 | **111-7906** | 1 | PLATE-CONVERTER DRIVE | |

M-METRIC PART

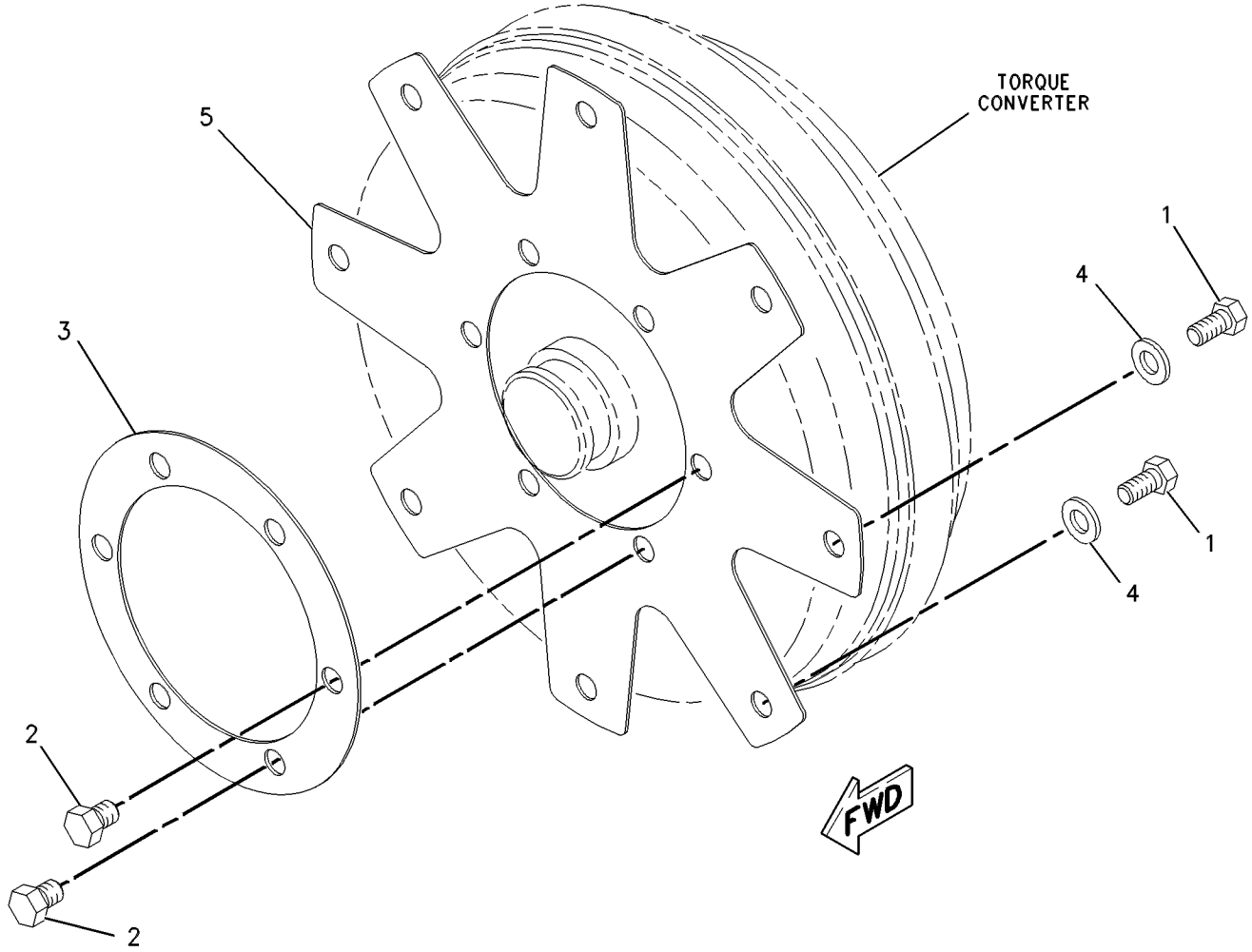


GRAPHIC #1 **<END>** g00547374

# POWER TRAIN

## *234-7527* FILLER GP-POWER TRAIN OIL

**S/N: BXC1-UP; DSX1-UP**
**PART OF 214-7012, 214-7014 POWER TRAIN AR**
**AN ATTACHMENT**

**SMCS-3005, 3081** **i01985077**

| NOTE | REF NO | GRAPHIC REF | PART NUMBER | QTY | PART NAME 1 2 3 4 5 6 (PRODUCT LEVEL) | SEE PAGE |
|---|---|---|---|---|---|---|
| | 1 | 1 | **9P-1872** | 1 | SPACER | |
| | 2 | 1 | **234-9613** | 1 | TUBE AS | |
| | 3 | 1 | **236-7295** | 1 | GAUGE GP-OIL LEVEL (DIPSTICK) | |
| | 4 | 1 | **4J-0522** | 1 | SEAL-O-RING | |
| | 5 | 1 | **5P-7854** | 1 | CLIP | |
| | 6 | 1 | **8S-0023** | 1 | CLIP (SLOT) | |
| | 7 | 1 | **8S-0024** | 1 | CLIP (TAB) | |
| | 8 | 1 | **8T-4121** | 1 | WASHER-HARD (11X21X2.5MM THK) | |
| M | 9 | 1 | **8T-4136** | 1 | BOLT (M10X1.5X25MM) | |
| | 10 | 1 | **8T-4223** | 3 | WASHER-HARD (13.5X25.5X3MM THK) | |
| M | 11 | 1 | **8T-4956** | 2 | BOLT (M12X1.75X35MM) | |
| M | 12 | 1 | **8T-6868** | 1 | BOLT (M12X1.75X80MM) | |

M-METRIC PART

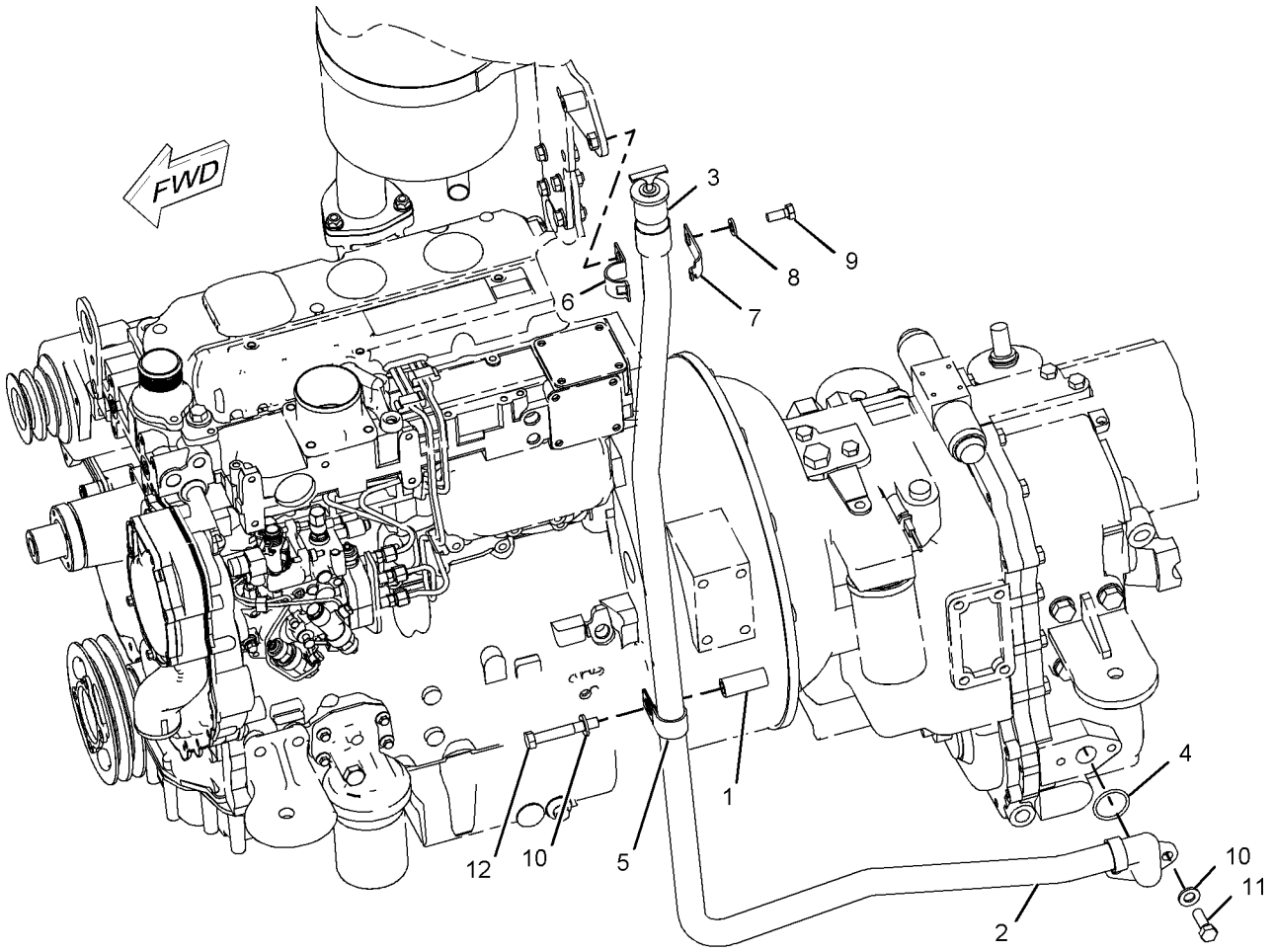


GRAPHIC #1 **<END>** g01033492

# POWER TRAIN

## *234-7528* FILLER GP-POWER TRAIN OIL

**S/N: BXC1-UP; DSX1-UP**
**PART OF 214-7013, 214-7015 POWER TRAIN AR**
**AN ATTACHMENT**

**SMCS-3005, 3081** **i01988393**

| NOTE | REF NO | GRAPHIC REF | PART NUMBER | QTY | PART NAME 1 2 3 4 5 6 (PRODUCT LEVEL) | SEE PAGE |
|---|---|---|---|---|---|---|
| | 1 | 1 | **9P-1872** | 1 | SPACER | |
| | 2 | 1 | **236-7295** | 1 | GAUGE GP-OIL LEVEL (DIPSTICK) | |
| M | 3 | 1 | **8T-6868** | 1 | BOLT (M12X1.75X80MM) | |
| | 4 | 1 | **4J-0522** | 1 | SEAL-O-RING | |
| | 5 | 1 | **5P-7854** | 1 | CLIP | |
| | 6 | 1 | **8S-0023** | 1 | CLIP (SLOT) | |
| | 7 | 1 | **8S-0024** | 1 | CLIP (TAB) | |
| | 8 | 1 | **8T-4121** | 1 | WASHER-HARD (11X21X2.5MM THK) | |
| M | 9 | 1 | **8T-4136** | 1 | BOLT (M10X1.5X25MM) | |
| | 10 | 1 | **8T-4223** | 3 | WASHER-HARD (13.5X25.5X3MM THK) | |
| M | 11 | 1 | **8T-4956** | 2 | BOLT (M12X1.75X35MM) | |

M-METRIC PART

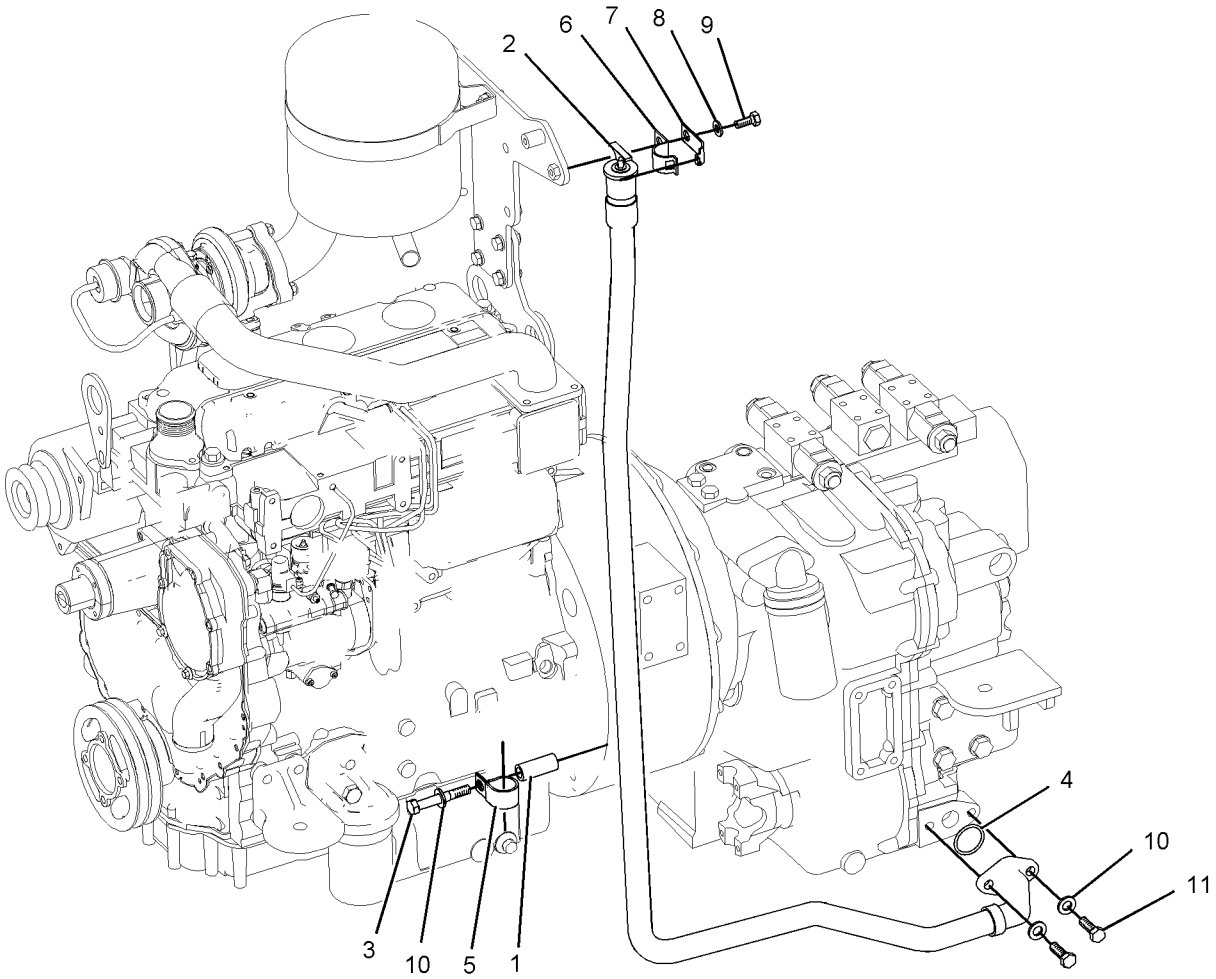


GRAPHIC #1 **<END>** g01030592

# POWER TRAIN

## *209-9884* HOUSING & FLANGE GP-AXLE

**S/N: BXC1-UP; DSX1-UP**

**PART OF 231-0705 AXLE GP-DRIVE & STEERING**

**SMCS-4057, 4234** **i02005837**

| NOTE | REF NO | GRAPHIC REF | PART NUMBER | QTY | PART NAME 1 2 3 4 5 6 (PRODUCT LEVEL) | SEE PAGE |
|---|---|---|---|---|---|---|
| | 1 | 1 | **217-2877** | 1 | HOUSING GP-AXLE (RH) | |
| | 1A | 1 | **199-0648** | 1 | NUT-JAM | |
| | 1B | 1 | **198-7814** | 1 | BOLT (M16X100MM) | |
| | 1C | 1 | **209-7460** | 1 | BUSHING | |
| | 1D | 1 | **209-7465** | 1 | SEAL | |
| | 1E | 1 | **231-0700** | 1 | HOUSING | |
| | 2 | 1 | *231-0703* | 1 | FLANGE AS | |
| | 2A | 1 | **2S-0480** | 2 | CUP-BEARING (TAPERED ROLLER BEARING) | |
| | 2B | 1 | **178-8608** | 2 | CONE | |
| | 2C | 1 | **226-4346** | 8 | STUD | |
| | 2D | 1 | **229-5092** | 1 | SEAL | |
| | 3 | 1 | **226-4366** | 1 | NUT-SPANNER | |
| | 4 | 1 | **226-4370** | 1 | BOLT-LOCKING | |
| | 5 | 1 | **229-5085** | 1 | SPACER (110X123X18.36MM THK) | |
| | 6 | 1 | **217-2879** | 1 | GEAR GP-RING | |
| | 7 | 1 | **226-4365** | 1 | WASHER-TAB | |
| | | | | | AVAILABLE REPAIR KIT(S): | |
| | | | **231-0676** | 1 | KIT-FLANGE | |
| | | | | | (INCLUDES STUDS) | |

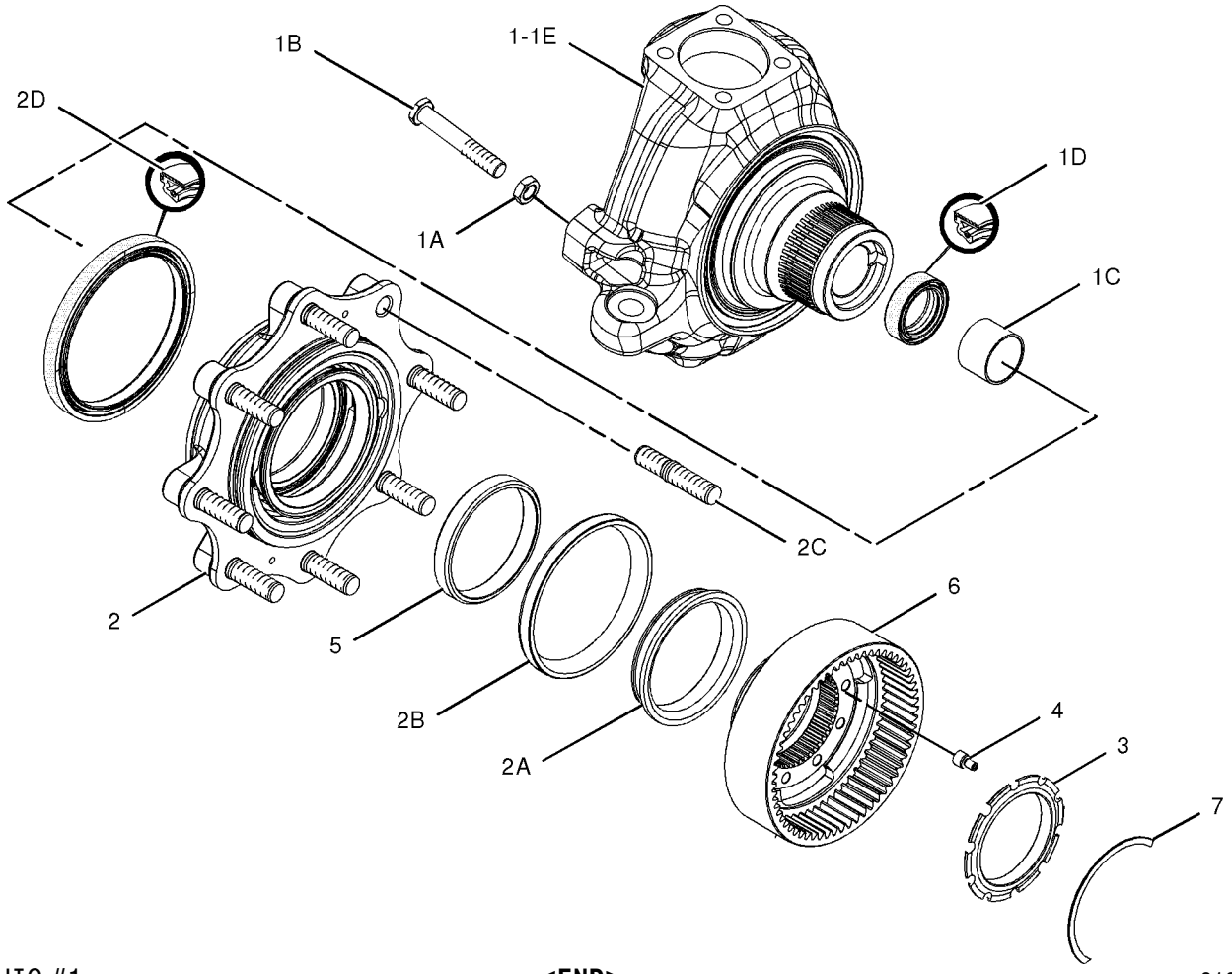


GRAPHIC #1 **<END>** g01038238

# POWER TRAIN

## *209-9885* HOUSING & FLANGE GP-AXLE

**S/N: BXC1-UP; DSX1-UP**

**PART OF 231-0705 AXLE GP-DRIVE & STEERING**

**SMCS-4057, 4234** **i02006067**

| NOTE | REF NO | GRAPHIC REF | PART NUMBER | QTY | PART NAME 1 2 3 4 5 6 (PRODUCT LEVEL) | SEE PAGE |
|---|---|---|---|---|---|---|
| | 1 | 1 | **217-2878** | 1 | HOUSING GP-AXLE (LH) | |
| | 1A | 1 | **199-0648** | 1 | NUT-JAM | |
| | 1B | 1 | **198-7814** | 1 | BOLT (M16X100MM) | |
| | 1C | 1 | **209-7460** | 1 | BUSHING | |
| | 1D | 1 | **209-7465** | 1 | SEAL | |
| | 1E | 1 | **231-0700** | 1 | HOUSING | |
| | 2 | 1 | **231-0703** | 1 | FLANGE AS | |
| | 2A | 1 | **2S-0480** | 1 | CUP-BEARING (TAPERED ROLLER BEARING) | |
| | 2B | 1 | **178-8608** | 1 | CONE | |
| | 2C | 1 | **226-4346** | 1 | STUD | |
| | 2D | 1 | **229-5092** | 1 | SEAL | |
| | 3 | 1 | **226-4366** | 1 | NUT-SPANNER | |
| | 4 | 1 | **226-4370** | 1 | BOLT-LOCKING | |
| | 5 | 1 | **229-5085** | 1 | SPACER (110X123X18.36MM THK) | |
| | 6 | 1 | **217-2879** | 1 | GEAR GP-RING | |
| | 7 | 1 | **226-4365** | 1 | WASHER-TAB | |

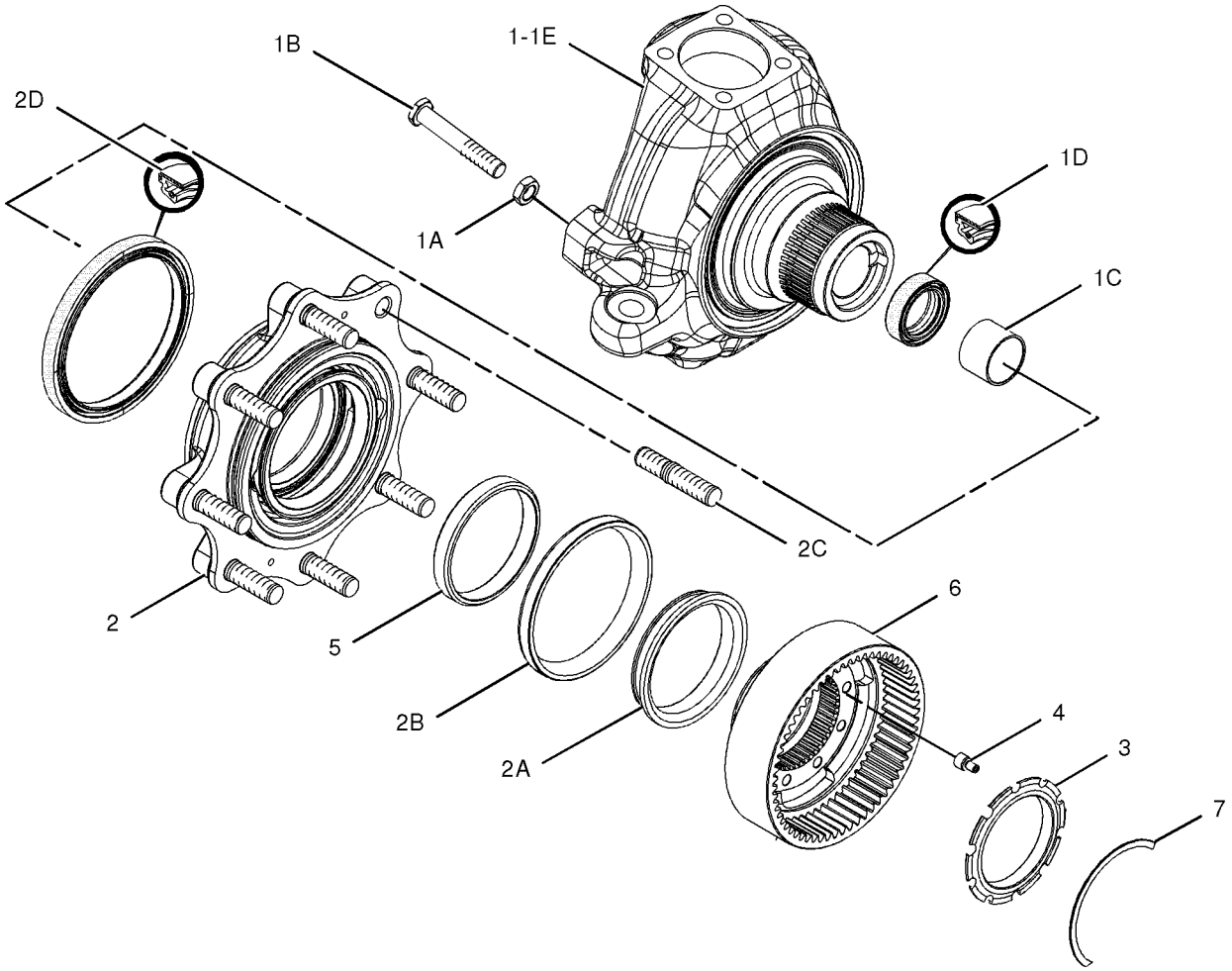


GRAPHIC #1 **<END>** g01038243

# POWER TRAIN

## *130-8149* LOCKOUT GP-FOURTH GEAR

**S/N: BXC1-UP; DSX1-UP**
**PART OF 206-4924 CONVERSION AR-CERTIFICATION**
**AN ATTACHMENT**

**SMCS-7000** **i01127124**

| NOTE | REF NO | GRAPHIC REF | PART NUMBER | QTY | PART NAME 1 2 3 4 5 6 (PRODUCT LEVEL) | SEE PAGE |
|---|---|---|---|---|---|---|
| | 1 | 1 | **120-9763** | 1 | PLUG-LOCKOUT | |
| | 2 | 1 | **3J-1907** | 1 | SEAL-O-RING (11.89MM ID) | |
| D | 3 | 1 | **8C-8418** | | LOCKWIRE (0.4M) | |
| | 4 | 1 | **8S-8158** | 1 | SEAL-WIRE | |
| | 5 | 1 | **127-5469** | 1 | WASHER-LOCK | |

D-ORDER BY THE METER

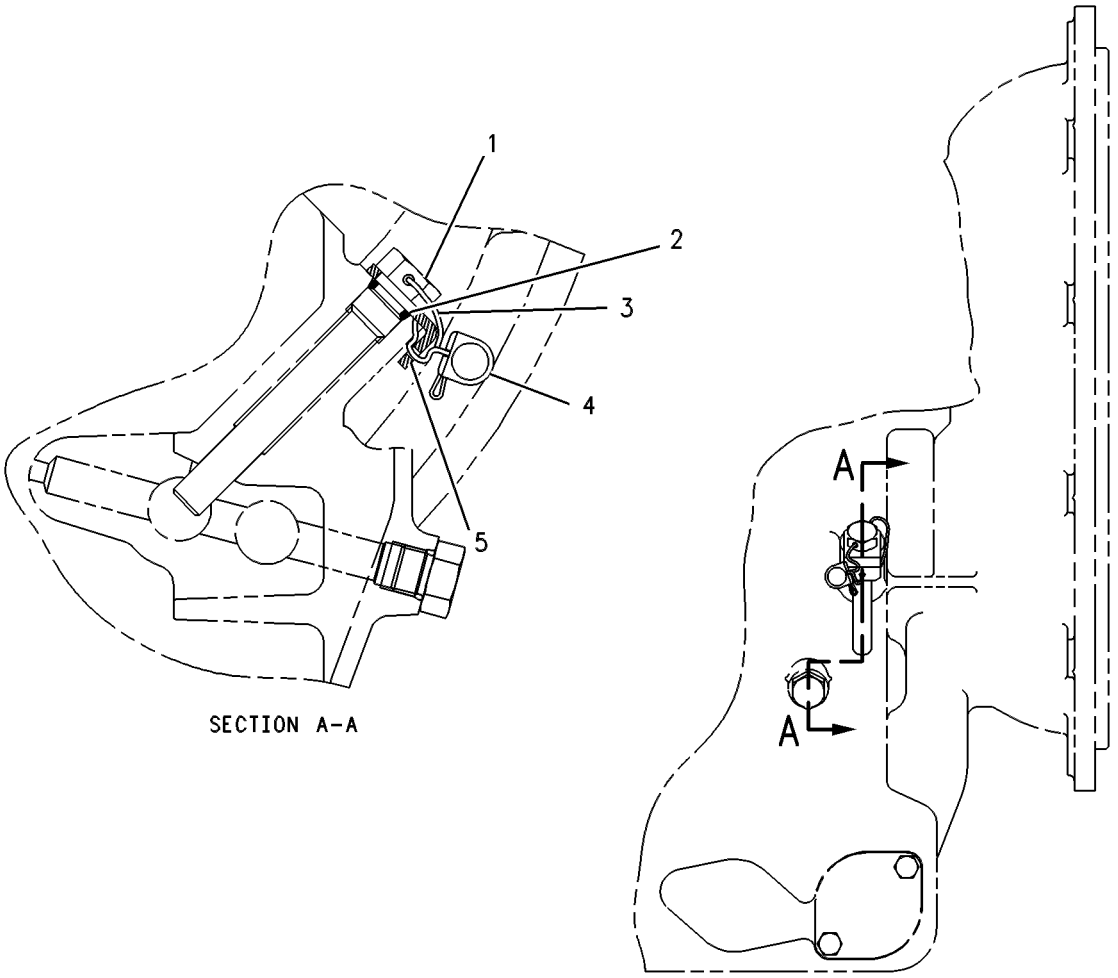


GRAPHIC #1 **<END>** g00258869

# POWER TRAIN

## *202-6199* MOUNTING GP-AXLE—ALL WHEEL DRIVE

**S/N: BXC1-UP; DSX1-UP**

**PART OF 237-6463 DRIVE AR-BACKHOE LOADER**

**SMCS-3268** **i01964646**

| NOTE | REF NO | GRAPHIC REF | PART NUMBER | QTY | PART NAME 1 2 3 4 5 6 (PRODUCT LEVEL) | SEE PAGE |
|---|---|---|---|---|---|---|
| B | 1 | 1 | **1K-7082** | 1 | WASHER (2X4X1/32 IN THK) | |
| | 2 | 1 | **5F-5434** | 1 | VALVE AS-RELIEF (AIR VENT) | |
| B | 3 | 1 | **9R-9702** | 2 | WASHER (56X100X1.6MM THK) | |
| | 4 | 1 | **112-9629** | 1 | PIN | |
| | 5 | 1 | **165-8996** | 2 | WASHER-THRUST (55.5X100.5X5MM THK) | |
| M | 6 | 1 | **7X-2570** | 8 | BOLT (M20X2.5X220MM) | |
| M | 7 | 1 | **8T-4131** | 8 | NUT (M20X2.5 THD) | |
| M | 8 | 1 | **8T-5041** | 1 | BOLT (M12X1.75X120MM) | |
| | 9 | 1 | **8T-5439** | 16 | WASHER (21.5X45X6MM THK) | |
| M | 10 | 1 | **8T-8549** | 1 | LOCKNUT (M12X1.75 THD) | |

B-USE AS REQUIRED
M-METRIC PART

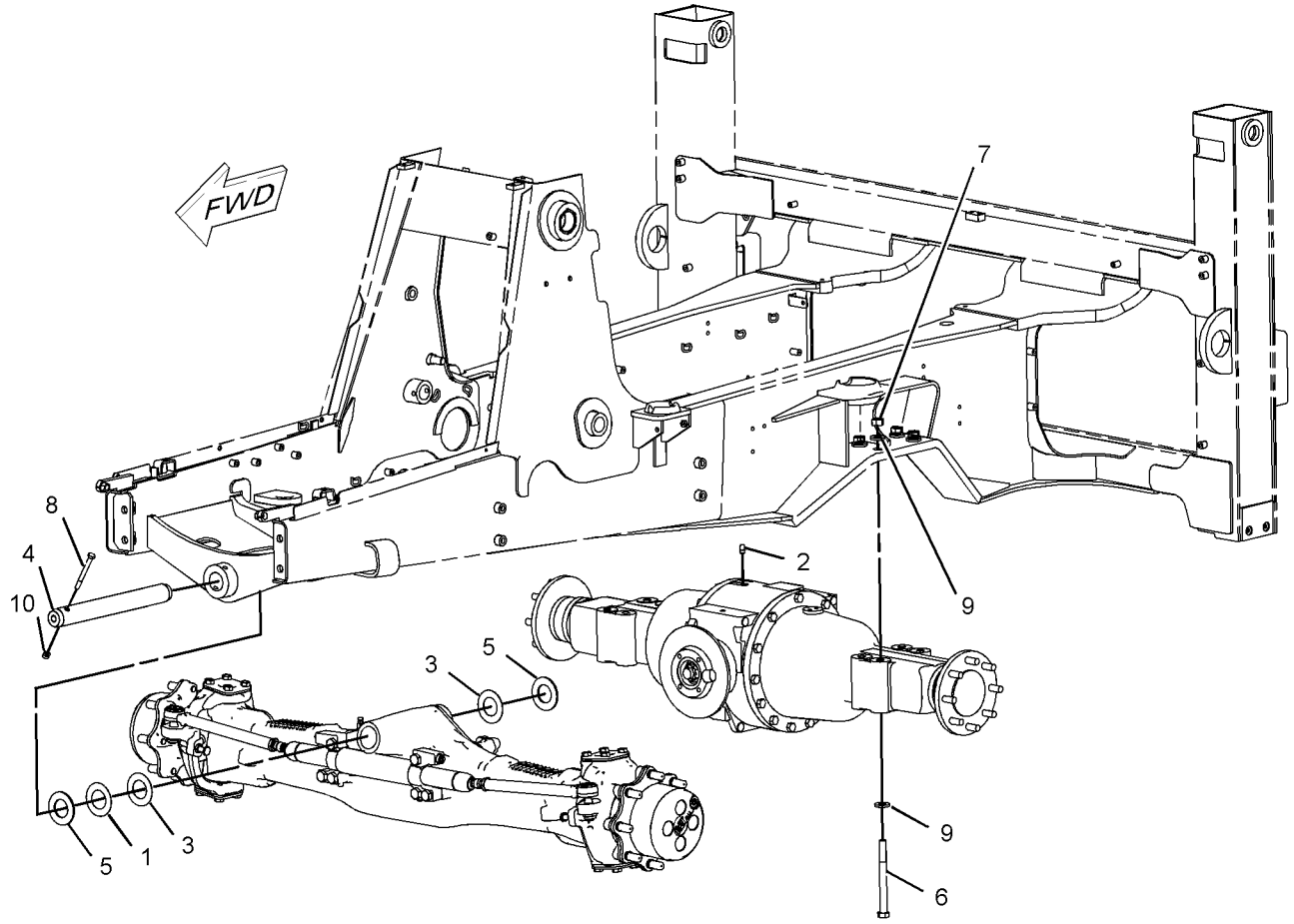


GRAPHIC #1 **<END>** g01021004

# POWER TRAIN

## *210-5924* PLANETARY GP-FINAL DRIVE

**S/N: BXC1-UP; DSX1-UP**

**PART OF 231-0705 AXLE GP-DRIVE & STEERING**

**SMCS-4050** **i01946542**

| NOTE | REF NO | GRAPHIC REF | PART NUMBER | QTY | PART NAME 1 2 3 4 5 6 (PRODUCT LEVEL) | SEE PAGE |
|---|---|---|---|---|---|---|
| | 1 | 1 | **210-5931** | 4 | RETAINER | |
| | 2 | 1 | **210-5934** | 4 | GEAR-PLANET | |
| | 3 | 1 | **095-0924** | 4 | RING-RETAINING | |
| | 4 | 1 | **209-7466** | 1 | KIT-PLANETARY CARRIER | |
| | 5 | 1 | **219-8783** | 23 | KIT-ROLLER BEARING | |

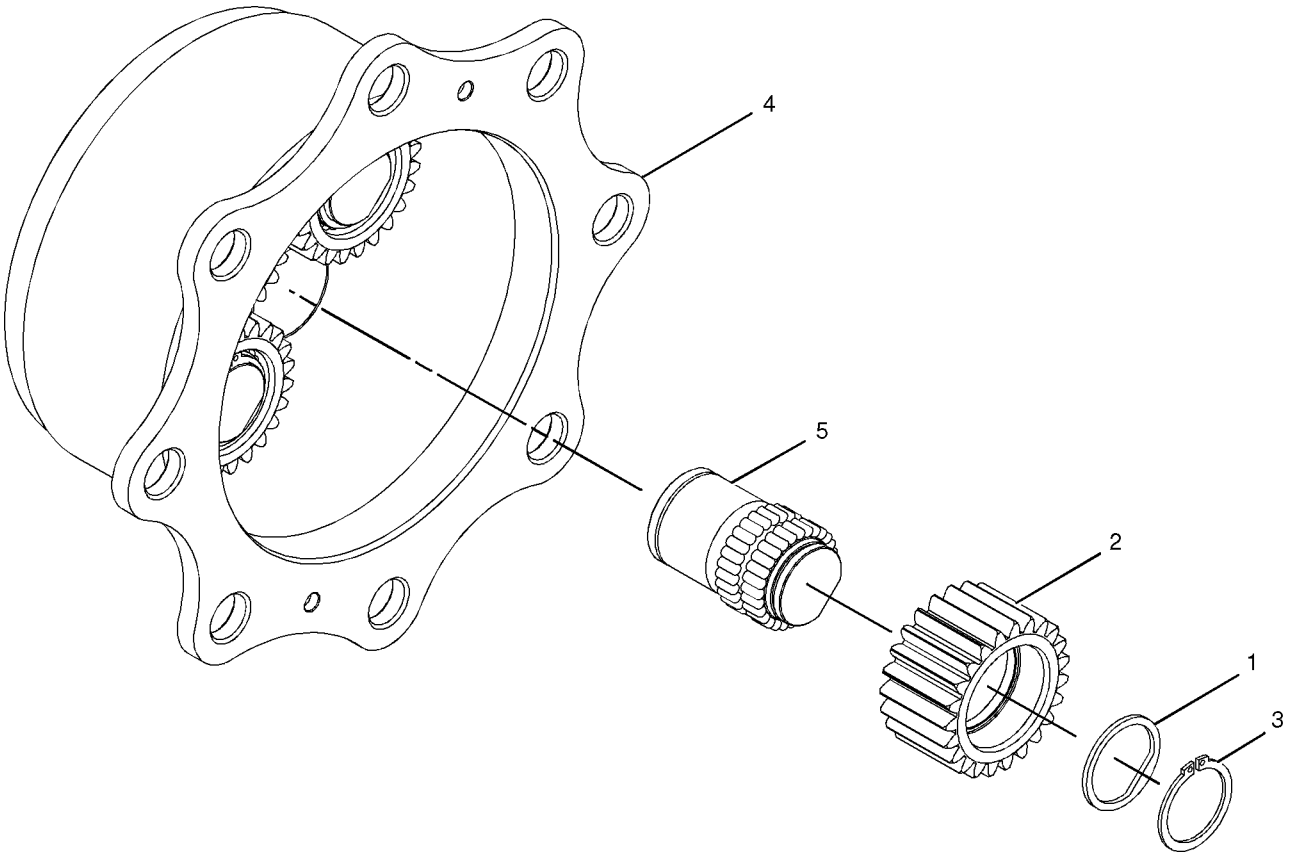


GRAPHIC #1 **<END>** g01013213

# POWER TRAIN

## *184-7970* POWER TRAIN AR–2 WHEEL STEER

**S/N: BXC1-UP; DSX1-UP**

**PART OF 214-6993, 214-6994 COMMON AR**

**SMCS-3000, 4000** **i01439916**

| NOTE | PART NUMBER | QTY | PART NAME 1 2 3 4 5 6 (PRODUCT LEVEL) | SEE PAGE |
|---|---|---|---|---|
| Y | *191-9114* | 1 | CONTROL GP-DIFFERENTIAL LOCK | 225 |
| Y | *184-6570* | 1 | CONTROL GP-PARKING BRAKE | 291 |
| Y | *165-6918* | 1 | CONTROL GP-SERVICE BRAKE | 292 |
| Y | *184-7898* | 1 | MOUNTING GP-INSTRUMENT PANEL | 756 |
| Y | *113-1151* | 1 | SHAFT GP-DRIVE | 241 |

Y-SEPARATE ILLUSTRATION

**<END>**

## *214-7012* POWER TRAIN AR–ALL WHEEL DRIVE–STANDARD SHIFT

**S/N: BXC1-UP; DSX1-UP**

**AN ATTACHMENT**

**SMCS-3000, 4000** **i01969807**

| NOTE | PART NUMBER | QTY | PART NAME 1 2 3 4 5 6 (PRODUCT LEVEL) | SEE PAGE |
|---|---|---|---|---|
| | **164-1105** | 1 | CONSOLE-FRONT | |
| Y | *164-1130* | 1 | CONTROL GP-TRANSMISSION | 226 |
| Y | *234-7527* | 1 | FILLER GP-POWER TRAIN OIL | 232 |
| Y | *143-0786* | 1 | LINES GP-POWER TRAIN COOLER | 59 |
| Y | *143-0782* | 1 | MOUNTING GP-ENGINE & TMSN | 41 |
| Y | *185-3525* | 1 | MOUNTING GP-INSTRUMENT PANEL | 757 |
| Y | *202-5733* | 1 | SHAFT GP-DRIVE | 244 |
| Y | *185-7586* | 1 | TRANSMISSION AR-DIRECT DRIVE | 247 |

Y-SEPARATE ILLUSTRATION

**<END>**

## *214-7013* POWER TRAIN AR–ALL WHEEL DRIVE–AUTOSHIFT

**S/N: BXC1-UP; DSX1-UP**

**AN ATTACHMENT**

**SMCS-3000, 4000** **i01969812**

| NOTE | PART NUMBER | QTY | PART NAME 1 2 3 4 5 6 (PRODUCT LEVEL) | SEE PAGE |
|---|---|---|---|---|
| | **164-1146** | 1 | CONSOLE-FRONT | |
| Y | *234-7528* | 1 | FILLER GP-POWER TRAIN OIL | 233 |
| Y | *143-0789* | 1 | LINES GP-POWER TRAIN COOLER | 61 |
| Y | *143-0788* | 1 | MOUNTING GP-ENGINE & TMSN | 42 |
| Y | *185-3525* | 1 | MOUNTING GP-INSTRUMENT PANEL | 757 |
| Y | *138-4559* | 1 | SHAFT GP-DRIVE | 242 |
| Y | *185-7587* | 1 | TRANSMISSION AR-POWER SHIFT | 247 |
| Y | *237-8037* | 1 | WIRING GP-AUTOSHIFT (AUTOSHIFT) | 176 |

Y-SEPARATE ILLUSTRATION

**<END>**

## *214-7014* POWER TRAIN AR—ALL WHEEL DRIVE—STANDARD SHIFT

**S/N: BXC1-UP; DSX1-UP**

**AN ATTACHMENT**

**SMCS-3000, 4000** **i02000056**

| NOTE | PART NUMBER | QTY | PART NAME 1 2 3 4 5 6 (PRODUCT LEVEL) | SEE PAGE |
|---|---|---|---|---|
| Y | *237-9541* | 1 | CONSOLE GP-FRONT | 717 |
| Y | *164-1130* | 1 | CONTROL GP-TRANSMISSION | 226 |
| Y | *164-1141* | 1 | DUCT GP-AIR | 735 |
| Y | *234-7527* | 1 | FILLER GP-POWER TRAIN OIL | 232 |
| Y | *143-0786* | 1 | LINES GP-POWER TRAIN COOLER | 59 |
| Y | *143-0782* | 1 | MOUNTING GP-ENGINE & TMSN | 41 |
| Y | *185-3525* | 1 | MOUNTING GP-INSTRUMENT PANEL | 757 |
| Y | *202-5733* | 1 | SHAFT GP-DRIVE | 244 |
| Y | *185-7586* | 1 | TRANSMISSION AR-DIRECT DRIVE | 247 |

Y-SEPARATE ILLUSTRATION

**<END>**

## *214-7015* POWER TRAIN AR—ALL WHEEL DRIVE—AUTOSHIFT

**S/N: BXC1-UP; DSX1-UP**

**AN ATTACHMENT**

**SMCS-3000, 4000** **i02000059**

| NOTE | PART NUMBER | QTY | PART NAME 1 2 3 4 5 6 (PRODUCT LEVEL) | SEE PAGE |
|---|---|---|---|---|
| Y | *237-9542* | 1 | CONSOLE GP-FRONT | 718 |
| Y | *164-1142* | 1 | DUCT GP-AIR | 737 |
| Y | *234-7528* | 1 | FILLER GP-POWER TRAIN OIL | 233 |
| Y | *143-0789* | 1 | LINES GP-POWER TRAIN COOLER | 61 |
| Y | *143-0788* | 1 | MOUNTING GP-ENGINE & TMSN | 42 |
| Y | *185-3525* | 1 | MOUNTING GP-INSTRUMENT PANEL | 757 |
| Y | *202-5732* | 1 | SHAFT GP-DRIVE | 243 |
| Y | *185-7587* | 1 | TRANSMISSION AR-POWER SHIFT | 247 |
| Y | *237-8037* | 1 | WIRING GP-AUTOSHIFT (AUTOSHIFT) | 176 |

Y-SEPARATE ILLUSTRATION

**<END>**

# POWER TRAIN

## *113-1151* SHAFT GP-DRIVE–REAR

**S/N: BXC1-UP; DSX1-UP**

**PART OF 184-7970 POWER TRAIN AR**

**SMCS-3253** **i01108413**

| NOTE | REF NO | GRAPHIC REF | PART NUMBER | QTY | PART NAME 1 2 3 4 5 6 (PRODUCT LEVEL) | SEE PAGE |
|---|---|---|---|---|---|---|
| | 1 | 1 | **8T-0799** | 4 | BOLT (1/2-20X1-1/2) | |
| | 2 | 1 | **5V-2545** | 2 | STRAP | |
| | 3 | 1 | **107-6826** | 4 | BOLT (M24X19.1MM) | |
| | 4 | 1 | **113-1150** | 1 | SHAFT AS-MAIN | |
| | | 1 | **117-9887** | 2 | KIT-SPIDER & BEARING | |
| | 5 | 1 | **8T-4223** | 4 | WASHER-HARD (3MM THK) | |

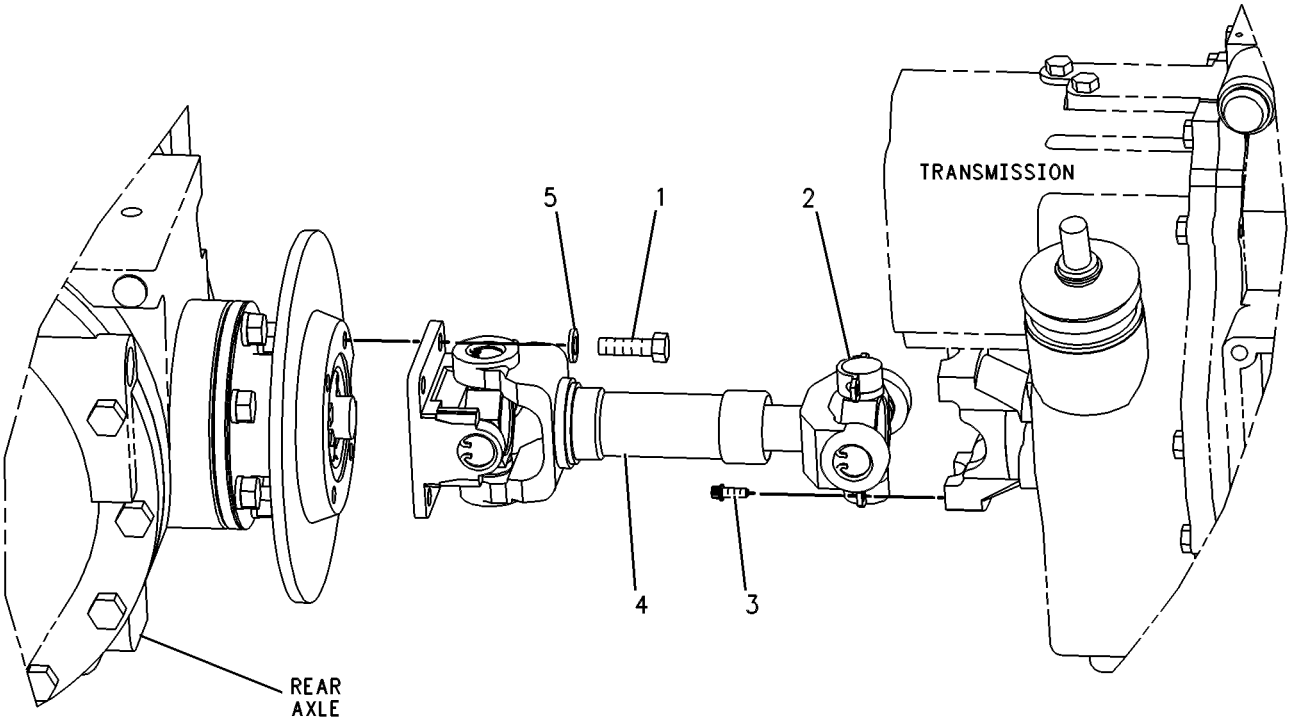


GRAPHIC #1 **<END>** g00131518

# POWER TRAIN

## *138-4559* SHAFT GP-DRIVE—FRONT—POWERSHIFT

**S/N: BXC1-UP; DSX1-UP**
**PART OF 214-7013 POWER TRAIN AR**
**AN ATTACHMENT**

**SMCS-3253** **i01108417**

| NOTE | REF NO | GRAPHIC REF | PART NUMBER | QTY | PART NAME 1 2 3 4 5 6 (PRODUCT LEVEL) | SEE PAGE |
|---|---|---|---|---|---|---|
| | 1 | 1 | **5V-2545** | 4 | STRAP | |
| | 2 | 1 | **107-6826** | 8 | BOLT (M24X19.1MM) | |
| | 3 | 1 | **138-4560** | 1 | SHAFT AS | |
| | | 1 | **117-9887** | 2 | KIT-SPIDER & BEARING | |

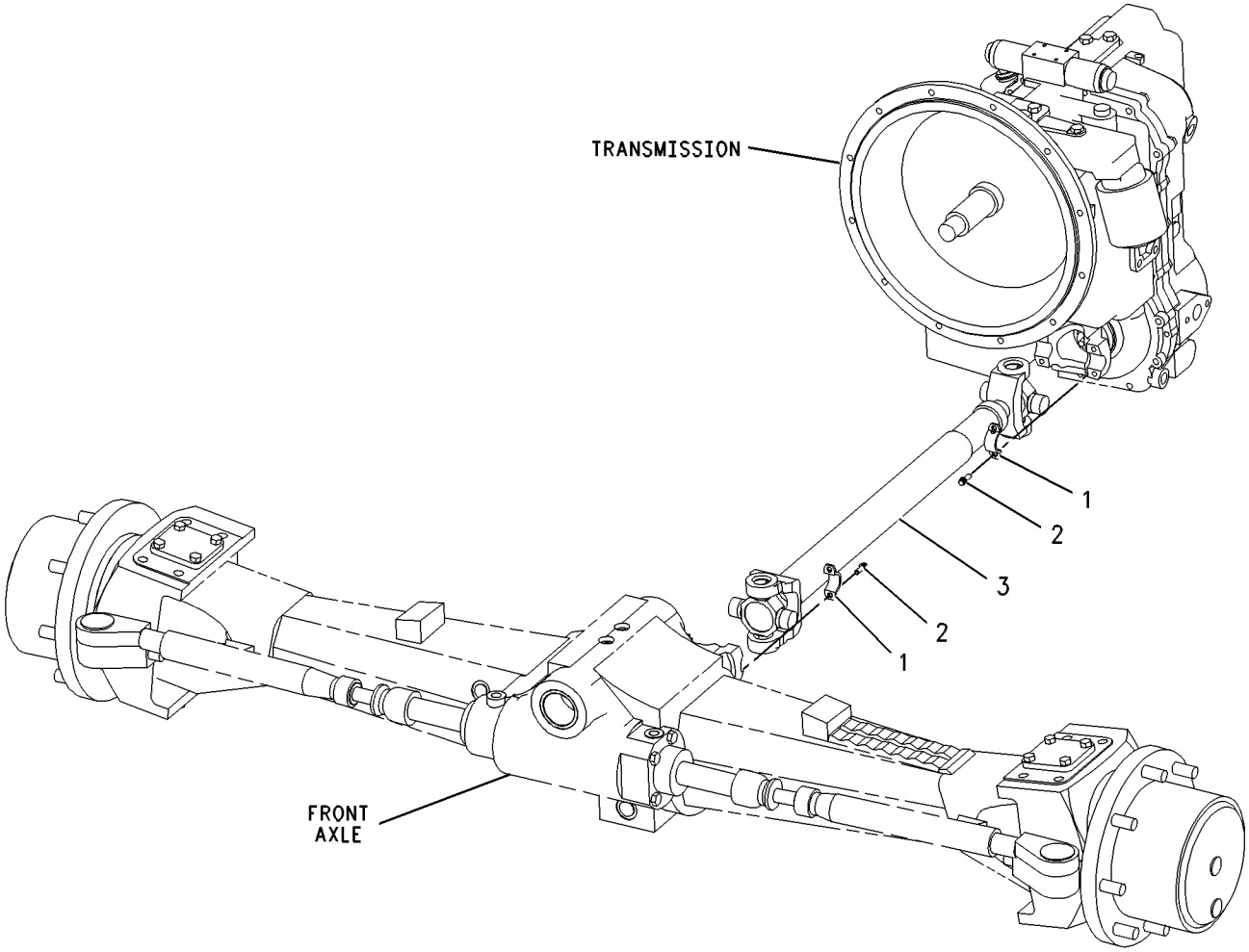


GRAPHIC #1 **<END>** g00286414

# POWER TRAIN

## *202-5732* SHAFT GP-DRIVE

**S/N: BXC1-UP; DSX1-UP**
**PART OF 214-7015 POWER TRAIN AR**
**AN ATTACHMENT**

**SMCS-3253** **i02000925**

| NOTE | REF NO | GRAPHIC REF | PART NUMBER | QTY | PART NAME 1 2 3 4 5 6 (PRODUCT LEVEL) | SEE PAGE |
|---|---|---|---|---|---|---|
| | 1 | 1 | **5V-2545** | 4 | STRAP | |
| M | 2 | 1 | **107-6826** | 8 | BOLT (M24X19.1MM) | |
| | 3 | 1 | **202-7875** | 1 | SHAFT AS-FRONT | |
| | | 1 | **117-9887** | 2 | KIT-SPIDER & BEARING | |

M-METRIC PART

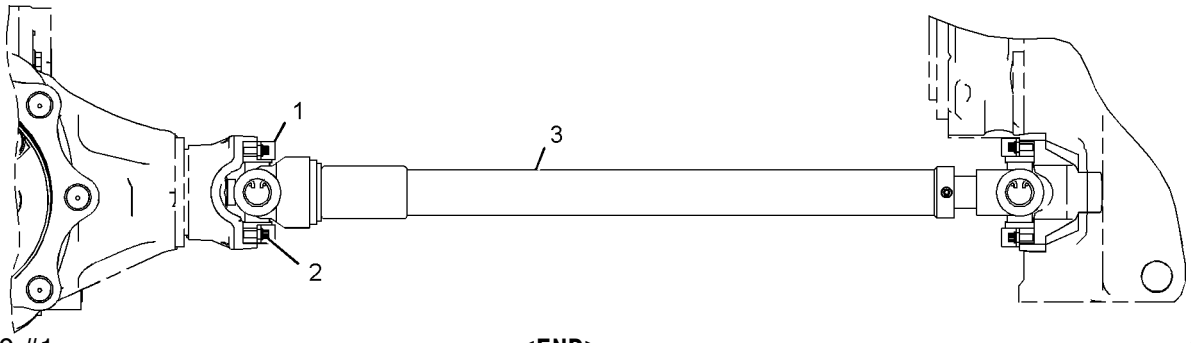


GRAPHIC #1 **<END>** g01036556

# POWER TRAIN

## *202-5733* SHAFT GP-DRIVE—ALL WHEEL DRIVE

**S/N: BXC1-UP; DSX1-UP**
**PART OF 214-7014 POWER TRAIN AR**
**AN ATTACHMENT**

**SMCS-3253** **i01994455**

| NOTE | REF NO | GRAPHIC REF | PART NUMBER | QTY | PART NAME 1 2 3 4 5 6 (PRODUCT LEVEL) | SEE PAGE |
|---|---|---|---|---|---|---|
| | 1 | 1 | **5V-2545** | 4 | STRAP | |
| M | 2 | 1 | **107-6826** | 8 | BOLT (M24X19.1MM) | |
| | 3 | 1 | **202-7874** | 1 | SHAFT AS | |
| | | 1 | **117-9887** | 2 | KIT-SPIDER & BEARING | |

M-METRIC PART

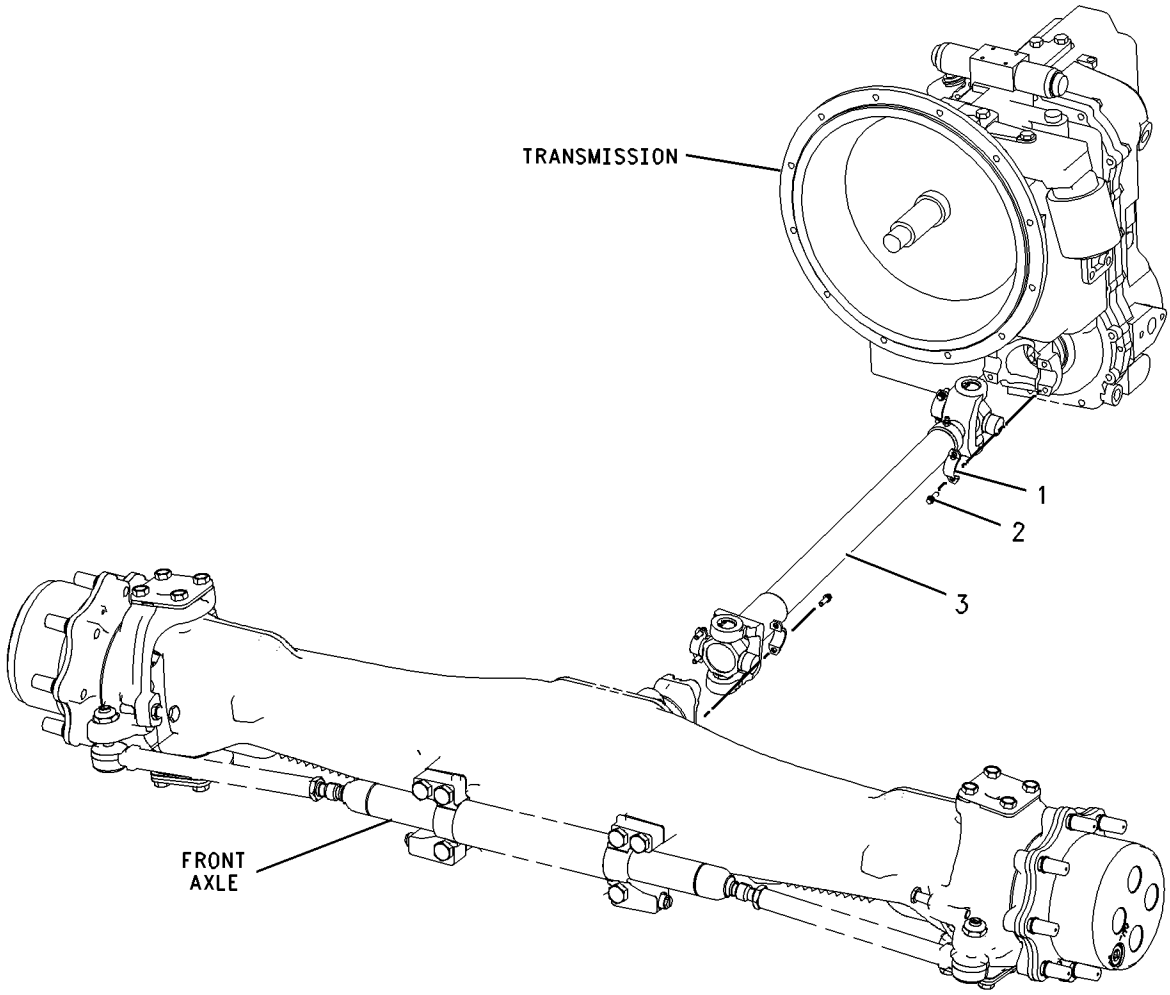


GRAPHIC #1 **<END>** g00996052

# *202-6008* TRANSMISSION & MOUNTING GP—ALL WHEEL DRIVE—STANDARD SHIFT

**S/N: BXC1-UP; DSX1-UP**

**PART OF 185-7586 TRANSMISSION AR-DIRECT DRIVE AN ATTACHMENT**

**SMCS-3030** **i01949166**

| NOTE | REF NO | GRAPHIC REF | PART NUMBER | QTY | PART NAME 1 2 3 4 5 6 (PRODUCT LEVEL) | SEE PAGE |
|---|---|---|---|---|---|---|
| | 1 | 1 | **113-9221** | 1 | SUPPORT-REAR | |
| | 2 | 1 | **138-7137** | 1 | SUPPORT AS | |
| Y | 3 | 1 | **201-8562** | 1 | TRANSMISSION GP-DIRECT DRIVE (ALL WHEEL DRIVE) | 248 |
| M | 4 | 1 | **7X-2553** | 4 | BOLT (M16X2X40MM) | |
| | 5 | 1 | **8T-4223** | 4 | WASHER-HARD (13.5X25.5X3MM THK) | |
| M | 6 | 1 | **8T-4956** | 4 | BOLT (M12X1.75X35MM) | |
| | 7 | 1 | **9X-8257** | 4 | WASHER (17.5X30X3.5MM THK) | |

M-METRIC PART
Y-SEPARATE ILLUSTRATION

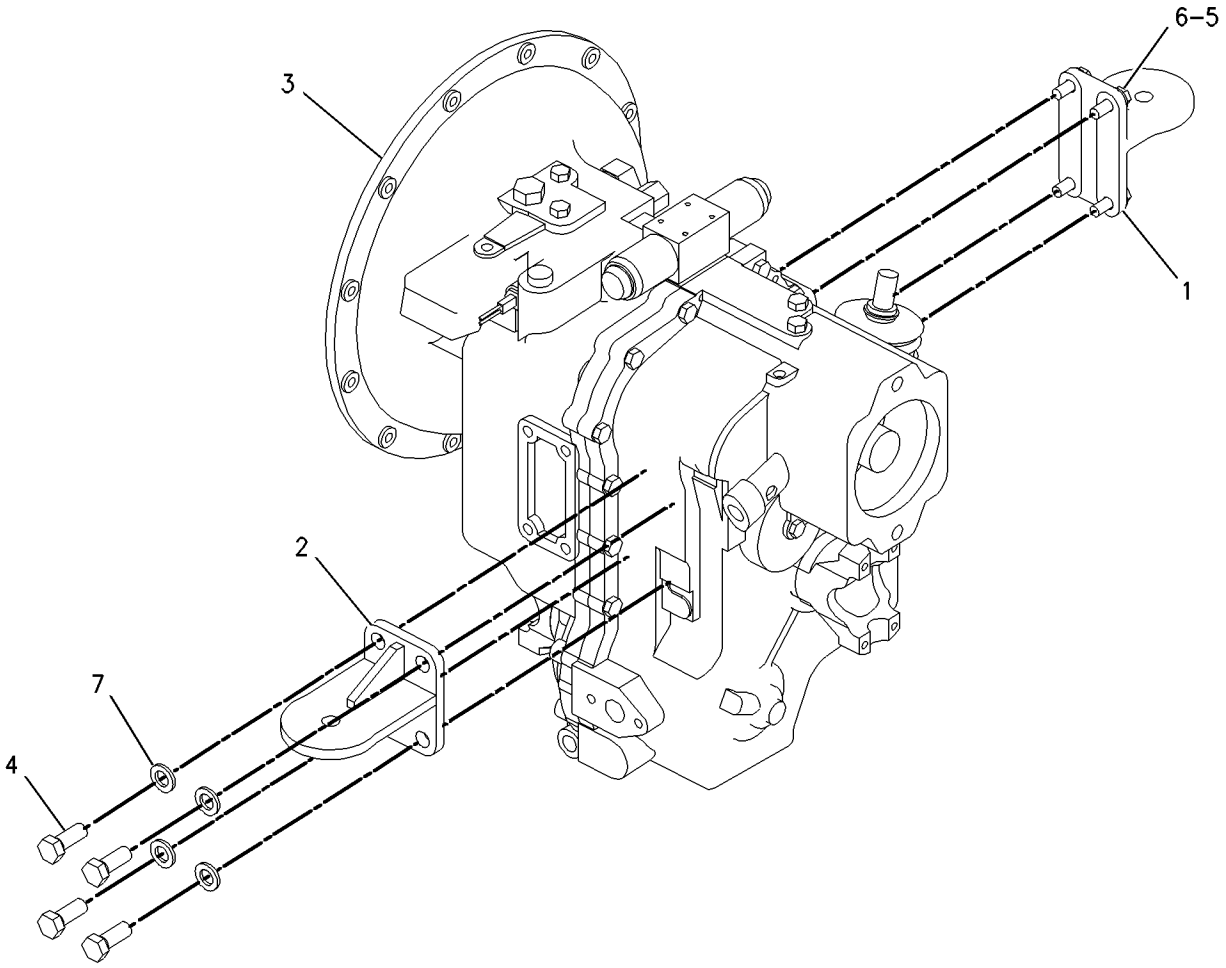


GRAPHIC #1 **<END>** g00869096

# *202-7432* TRANSMISSION & MOUNTING GP—ALL WHEEL DRIVE

**S/N: BXC1-UP; DSX1-UP**
**PART OF 185-7587 TRANSMISSION AR-POWER SHIFT**
**AN ATTACHMENT**

**SMCS-3030** **i02005403**

| NOTE | REF NO | GRAPHIC REF | PART NUMBER | QTY | PART NAME 1 2 3 4 5 6 (PRODUCT LEVEL) | SEE PAGE |
|---|---|---|---|---|---|---|
| | 1 | 1 | **113-9221** | 1 | SUPPORT-REAR | |
| | 2 | 1 | **138-7138** | 1 | SUPPORT AS | |
| Y | 3 | 1 | **192-0849** | 1 | TRANSMISSION GP-POWER SHIFT (ALL WHEEL DRIVE) | 254 |
| M | 4 | 1 | **7X-2553** | 4 | BOLT (M16X2X40MM) | |
| | 5 | 1 | **8T-4223** | 4 | WASHER-HARD (13.5X25.5X3MM THK) | |
| M | 6 | 1 | **8T-4956** | 4 | BOLT (M12X1.75X35MM) | |
| | 7 | 1 | **9X-8257** | 4 | WASHER (17.5X30X3.5MM THK) | |

M-METRIC PART
Y-SEPARATE ILLUSTRATION

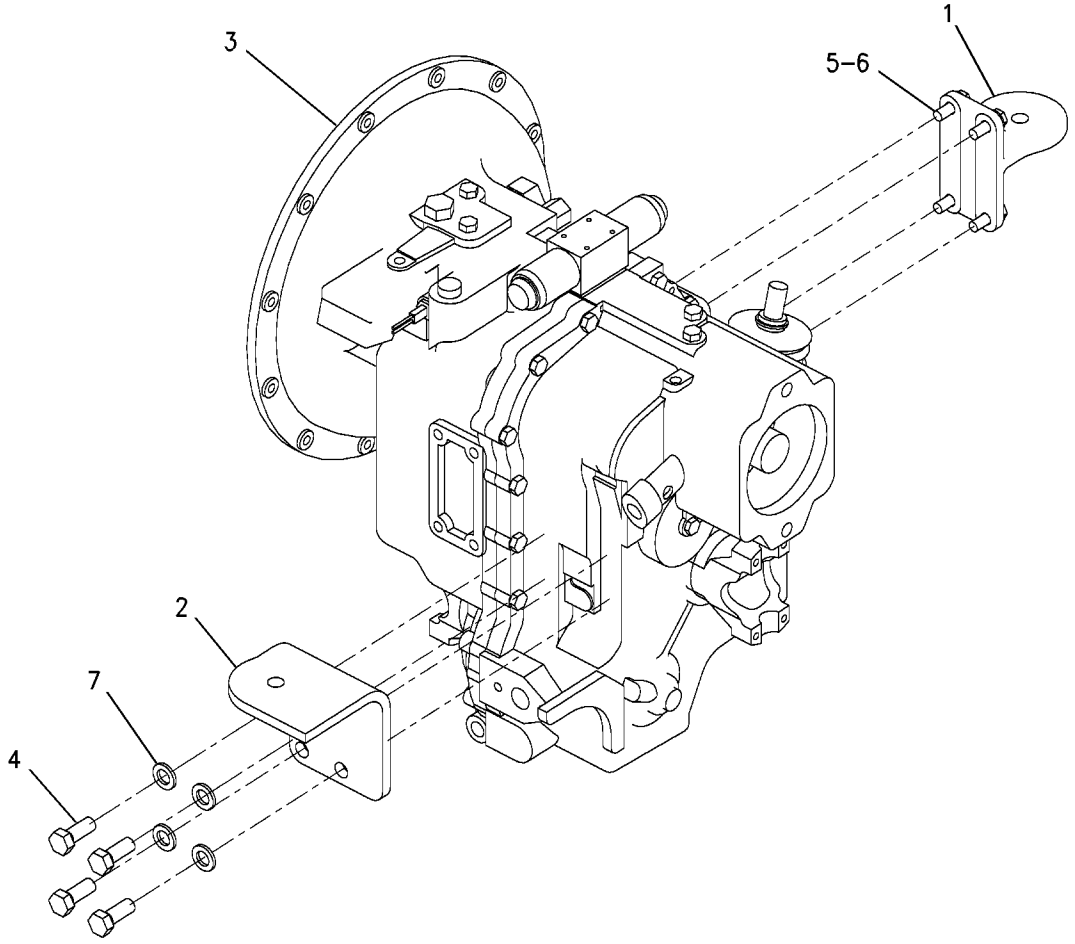


GRAPHIC #1 **<END>** g00797515

## *185-7586* TRANSMISSION AR-DIRECT DRIVE—ALL WHEEL DRIVE

**S/N: BXC1-UP; DSX1-UP**
**PART OF 214-7012, 214-7014 POWER TRAIN AR**
**AN ATTACHMENT**

**SMCS-3030** **i01981638**

| NOTE | PART NUMBER | QTY | PART NAME 1 2 3 4 5 6 (PRODUCT LEVEL) | SEE PAGE |
|---|---|---|---|---|
| Y | *111-7907* | 1 | DRIVE GP-FLEXIBLE COUPLING | 231 |
| Y | *202-6008* | 1 | TRANSMISSION & MOUNTING GP | 245 |
| | **119-4740** | 1 | FILTER AS-OIL (TRANSMISSION) | |
| | **140-7393** | 1 | TORQUE CONVERTER AS | |
| | | | —OR— | |
| | **212-6215** | 1 | TORQUE CONVERTER AS | |

Y-SEPARATE ILLUSTRATION

**<END>**

## *185-7587* TRANSMISSION AR-POWER SHIFT—ALL WHEEL DRIVE

**S/N: BXC1-UP; DSX1-UP**
**PART OF 214-7013, 214-7015 POWER TRAIN AR**
**AN ATTACHMENT**

**SMCS-3030** **i01999288**

| NOTE | PART NUMBER | QTY | PART NAME 1 2 3 4 5 6 (PRODUCT LEVEL) | SEE PAGE |
|---|---|---|---|---|
| Y | *111-7907* | 1 | DRIVE GP-FLEXIBLE COUPLING | 231 |
| | **119-4740** | 1 | FILTER AS-OIL (TRANSMISSION) | |
| | **212-6215** | 1 | TORQUE CONVERTER AS | |
| Y | **202-7432** | 1 | TRANSMISSION & MOUNTING GP | 246 |

Y-SEPARATE ILLUSTRATION

**<END>**

# POWER TRAIN

## 201-8562 TRANSMISSION GP-DIRECT DRIVE—ALL WHEEL DRIVE

**S/N: BXC1-UP; DSX1-UP**
**PART OF 202-6008 TRANSMISSION & MOUNTING GP**
**AN ATTACHMENT**

**SMCS-3030** **i01981326**

| NOTE | REF NO | GRAPHIC REF | PART NUMBER | QTY | PART NAME 1 2 3 4 5 6 (PRODUCT LEVEL) | SEE PAGE |
|---|---|---|---|---|---|---|
| | 1 | 3 | **174-9711** | 1 | GASKET | |
| | 2 | 3 | **175-0054** | 1 | SEAL-O-RING | |
| | 3 | 3 | **9M-1974** | 3 | WASHER-HARD (8.8X16X2MM THK) | |
| | 4 | 3 | **122-3652** | 2 | PLUG | |
| | 5 | 3 | **121-7405** | 1 | VALVE GP-RELIEF (CLUTCH PRESSURE) | |
| | 5A | 3 | **6V-9178** | 1 | SEAL-O-RING | |
| | 5B | 3 | **7X-4744** | 1 | SEAL-O-RING | |
| | 5C | 3 | **106-9586** | 1 | SEAL-O-RING | |
| | 6 | 3 | **121-7396** | 1 | VALVE GP-RELIEF (CONVERTER) | |
| | 6A | 3 | **6V-4589** | 1 | SEAL-O-RING | |
| | 6B | 3 | **8L-2746** | 1 | SEAL-O-RING | |
| M | 7 | 1,3 | **8C-5748** | 7 | BOLT (M8X1.25X55MM) | |
| | 8 | 1 | **9P-9150** | 4 | WASHER (8.25X18X.84MM THK) | |
| | 9 | 2 | **192-0845** | 1 | CASE AS | |
| | 10 | 2 | **156-9275** | 1 | CASE-TRANSMISSION | |
| | 11 | 1,2,3 | **9S-4191** | 10 | PLUG | |
| | 12 | 1,2,3 | **3J-1907** | 11 | SEAL-O-RING | |
| M | 13 | 1 | **6V-8335** | 14 | BOLT-SELF LOCKING (M10X1.5X40MM) | |
| | 14 | 2 | **7T-3022** | 2 | SLEEVE | |
| | 15 | 2 | **123-8906** | 3 | CUP-TAPERED ROLLER | |
| | 16 | 2 | **123-8905** | 3 | CONE | |
| | 17 | 2 | **9U-8886** | 4 | RING-SEAL (44.95MM ID) | |
| | 18 | 2 | **7T-3021** | 2 | SYNCHRONIZER GP | |
| | 19 | 2 | **161-3249** | 1 | RING-RETAINING | |
| | 20 | 2 | **8E-5707** | 1 | PLATE-END | |
| | 21 | 2 | **121-0697** | 1 | WASHER-THRUST (45X65X5MM THK) | |
| | 22 | 2 | **172-6050** | 2 | BEARING-SPECIAL | |
| | 23 | 2 | **095-0927** | 1 | RING-RETAINING | |
| | 24 | 2 | **121-0714** | 1 | PISTON | |
| | 25 | 2 | **178-9566** | 1 | SPRING-PISTON | |
| | 26 | 2 | **121-0885** | 1 | RETAINER | |
| | 27 | 2 | **6T-9196** | 1 | SEAL | |
| | 28 | 2 | **6T-9194** | 8 | PLATE | |
| | 29 | 2 | **6Y-7957** | 8 | DISC-FRICTION | |
| | 30 | 2 | **190-9767** | 1 | SHAFT AS | |
| | 31 | 2 | **121-0904** | 1 | GEAR AS | |
| | 32 | 2 | **123-8912** | 2 | BEARING-ROLLER | |
| | 33 | 2 | **122-1877** | 1 | WASHER-THRUST (40X65X4MM THK) | |
| | 34 | 2 | **211-6758** | 1 | GEAR (19 TEETH) | |
| | 35 | 2 | **121-1251** | 1 | GEAR (28 TEETH) | |
| | 36 | 2 | **117-4650** | 1 | GEAR (37 TEETH) | |
| | 37 | 2 | **6T-9160** | 1 | GEAR (43 TEETH) | |
| | 38 | 2 | **121-1253** | 1 | GEAR (37 TEETH) | |
| | 39 | 2 | **6V-8500** | 2 | BEARING | |
| | 40 | 2 | **7T-3017** | 1 | SPACER (52.5X59X9.6MM THK) | |
| | 41 | 2 | **7T-3018** | 1 | SLEEVE | |
| | 42 | 2 | **6Y-2326** | 1 | RING | |
| | 43 | 2 | **122-1878** | 1 | RING-SEAL | |
| | 44 | 2 | **122-1879** | 1 | SPACER (58X67.5X2MM THK) | |
| B | 45 | 2 | **104-3288** | 1 | SHIM (0.05MM THK) | |
| B | | 2 | **121-2059** | 1 | SHIM (0.08MM THK) | |
| B | | 2 | **121-2060** | 1 | SHIM (0.18MM THK) | |
| B | | 2 | **121-2061** | 1 | SHIM (0.6MM THK) | |
| M | 46 | 3 | **6V-7731** | 2 | BOLT (M10X1.5X70MM) | |
| | 47 | 3 | **6Y-2035** | 1 | GASKET | |

## 201-8562 TRANSMISSION GP-DIRECT DRIVE *(contd. )* i01981326

| NOTE | REF NO | GRAPHIC REF | PART NUMBER | QTY | PART NAME 1 2 3 4 5 6 (PRODUCT LEVEL) | SEE PAGE |
|---|---|---|---|---|---|---|
| | 48 | 3 | **7T-3119** | 1 | HOUSING | |
| | 49 | 2 | **121-2062** | 1 | WASHER-THRUST (35X55X4MM THK) | |
| | 50 | 2 | **7T-3034** | | SHIM (2.02MM THK) | |
| B | 51 | 2 | **6T-9144** | 1 | SHIM (.051MM THK) | |
| B | | 2 | **6T-9147** | 1 | SHIM (.076MM THK) | |
| B | | 2 | **6T-9146** | 1 | SHIM (.127MM THK) | |
| B | | 2 | **6T-9145** | 1 | SHIM (.178MM THK) | |
| B | | 2 | **6T-9143** | 1 | SHIM (.381MM THK) | |
| B | | 2 | **6T-9142** | 1 | SHIM (.508MM THK) | |
| | 52 | 3 | **1H-9721** | 1 | PLUG-EXPANSION | |
| | 53 | 3 | **6K-0806** | 1 | STRAP-CABLE | |
| | 54 | 3 | **7T-3111** | 1 | COVER | |
| | 55 | 1 | **120-9762** | 4 | SEAL-O-RING | |
| | 56 | 3 | **121-7391** | 1 | LEVER | |
| | 57 | 2 | **005-0469** | 2 | CUP-BEARING | |
| | 58 | 2 | **005-0471** | 2 | CONE-BEARING | |
| | 59 | 2 | **211-6759** | 1 | SHAFT (OUTPUT) | |
| | 60 | 2 | **123-8910** | 1 | CUP-TAPERED ROLLER | |
| | 61 | 2 | **123-8909** | 1 | CONE-BEARING | |
| | 62 | 2 | **7T-2646** | 2 | SPACER (66X79.5X2.02MM THK) | |
| B | 63 | 2 | **6T-9166** | 2 | SHIM (0.051MM THK) | |
| B | | 2 | **6T-9165** | 2 | SHIM (0.076MM THK) | |
| B | | 2 | **6T-9164** | 2 | SHIM (0.178MM THK) | |
| B | | 2 | **6T-9163** | 2 | SHIM (0.599MM THK) | |
| | 64 | 3 | **7T-3251** | 1 | BREATHER (TRANSMISSION) | |
| M | 65 | 1 | **6V-8210** | 2 | BOLT (M8X1.25X16 MM) | |
| | 66 | 1 | **106-9861** | 1 | PLATE-COVER | |
| | 67 | 2 | **7T-3051** | 1 | PLUG | |
| | 68 | 2 | **8T-1580** | 1 | CUP | |
| | 69 | 2 | **8T-1581** | 1 | CONE | |
| | 70 | 2 | **6Y-2737** | 1 | CUP-BEARING | |
| | 71 | 2 | **6Y-2736** | 1 | CONE-BEARING | |
| | 72 | 2 | **121-2500** | 3 | WASHER-THRUST (50X70X4MM THK) | |
| | 73 | 2 | **121-2511** | 1 | SHAFT | |
| | 74 | 2 | **121-2537** | 1 | SHAFT-REVERSE | |
| | 75 | 2 | **121-2545** | 1 | SHAFT AS-INPUT | |
| | | 2 | **123-0714** | 1 | BEARING | |
| | | 2 | **123-2920** | 3 | PLUG | |
| | 76 | 2 | **121-2603** | 1 | GEAR (40 TEETH) | |
| | 77 | 2 | **121-2604** | 1 | GEAR (27 TEETH) | |
| | 78 | 2 | **121-0694** | 1 | WASHER-THRUST (40X70X4MM THK) | |
| | 79 | 2 | **122-1882** | 2 | PLATE-END | |
| | 80 | 2 | **122-1881** | 12 | PLATE-CLUTCH | |
| | 81 | 2 | **122-1880** | 12 | DISC | |
| | 82 | 2 | **6V-8757** | 3 | RING | |
| | 83 | 2 | **178-8200** | 2 | RETAINER-SPRING | |
| | 84 | 2 | **178-8134** | 2 | SPRING | |
| | 85 | 2 | **178-8132** | 2 | SEAL | |
| M | 86 | 1 | **121-9875** | 4 | BOLT (M10X1.5X55MM) | |
| | 87 | 2 | **122-6787** | 2 | YOKE AS | |
| | | 2 | **123-1377** | 1 | GUARD | |
| | 88 | 2 | **122-1883** | 1 | SPACER (38X45X5MM THK) | |
| | 89 | 2 | **122-1885** | 2 | SPACER (51X55X4MM THK) | |
| | 90 | 2 | **123-8913** | 4 | BEARING-ROLLER | |
| | 91 | 2 | **172-5317** | 2 | BEARING-SPECIAL | |
| | 92 | 2 | **122-3649** | 2 | RING-RETAINING | |
| | 93 | 2 | **7T-3195** | 2 | WASHER (12.3X47X6.35MM THK) | |
| | 94 | 3 | **123-2920** | 1 | PLUG | |
| M | 95 | 2 | **6V-8097** | 2 | BOLT (M12X1.75X30MM) | |

## 201-8562 TRANSMISSION GP-DIRECT DRIVE *(contd.)* i01981326

| NOTE | REF NO | GRAPHIC REF | PART NUMBER | QTY | PART NAME 1 2 3 4 5 6 (PRODUCT LEVEL) | SEE PAGE |
|---|---|---|---|---|---|---|
| | 96 | 2 | **5P-8066** | 2 | SEAL-O-RING | |
| | 97 | 2 | **122-1884** | 1 | SPACER (45X49X8MM THK) | |
| | 98 | 2 | **121-7385** | 1 | PUMP GP-TRANSMISSION | |
| | | 2 | **208-8240** | 1 | SEAL-LIP TYPE | |
| | 99 | 2 | **7X-4741** | 1 | SEAL (140MM ID) | |
| | 100 | 2 | **122-1886** | 1 | RING-SEAL | |
| | 101 | 1 | **014-5645** | 3 | BALL | |
| | 102 | 1 | **6Y-1341** | 2 | SPRING | |
| | 103 | 1 | **121-7403** | 1 | FORK-SHIFT | |
| | 104 | 1 | **121-7389** | 1 | ROD AS-GEARSHIFT | |
| | 105 | 1 | **121-7390** | 1 | ROD AS-GEARSHIFT | |
| | 106 | 1 | **7T-3249** | 2 | SCREW (3/8-24X0.75 IN) | |
| | 107 | 2 | **123-8907** | 2 | CONE-BEARING | |
| | 108 | 2 | **123-8908** | 2 | CUP-TAPERED ROLLER | |
| | 109 | 3 | **7T-3109** | 1 | PIN | |
| | 110 | 1 | **121-7404** | 1 | FORK-SHIFT | |
| | 111 | 3 | **127-3017** | 1 | SEAT AS | |
| | 112 | 2 | **6V-5100** | 1 | SEAL-O-RING | |
| | 113 | 3 | **3S-2093** | 1 | STRAP-CABLE | |
| | 114 | 2 | **1U-8846** | 1 | SEALANT-GASKET | |
| | 115 | 1 | **123-2919** | 2 | NUT (M11X1 THD) | |
| | 116 | 1 | **122-1876** | 1 | TUBE | |
| | 117 | 1 | **6Y-1896** | 1 | PLUG AS | |
| | | 1 | **5P-6718** | 1 | SEAL-O-RING | |
| | 118 | 1 | **123-2918** | 1 | SLEEVE | |
| | 119 | 2 | **121-7398** | 1 | SPACER (70X79.5X2MM THK) | |
| B | 120 | 2 | **121-7399** | 1 | SHIM (0.05MM THK) | |
| B | | 2 | **121-7400** | 1 | SHIM (0.08MM THK) | |
| B | | 2 | **121-7401** | 1 | SHIM (0.18MM THK) | |
| B | | 2 | **121-7402** | 1 | SHIM (0.6MM THK) | |
| | 121 | 1 | **9W-5460** | 1 | RING | |
| | 122 | 1 | **4F-7952** | 1 | SEAL-O-RING | |
| | 123 | 1 | **7T-2651** | 1 | STRAINER (TRANSMISSION CASE) | |
| | 124 | 2 | **178-8133** | 2 | GUIDE-SPRING | |
| M | 125 | 1 | **9X-6615** | 4 | BOLT (M5X.8X30MM) | |
| Y | 126 | 3 | **121-4036** | 1 | VALVE GP-SOLENOID (ALL WHEEL DRIVE) | 261 |
| Y | 127 | 3 | **223-8181** | 1 | VALVE GP-SOLENOID (FORWARD, NEUTRAL, REVERSE) | 265 |
| | 128 | 1 | **3G-6927** | 1 | ADAPTER | |
| | 129 | 1 | **7T-3253** | 2 | DOWEL | |
| | 130 | 2 | **216-2267** | 2 | SEAL-LIP TYPE | |
| | 131 | 1 | **122-6785** | 1 | PLUG AS | |

B-USE AS REQUIRED
M-METRIC PART
Y-SEPARATE ILLUSTRATION

## 201-8562 TRANSMISSION GP-DIRECT DRIVE *(contd.)* i01981326

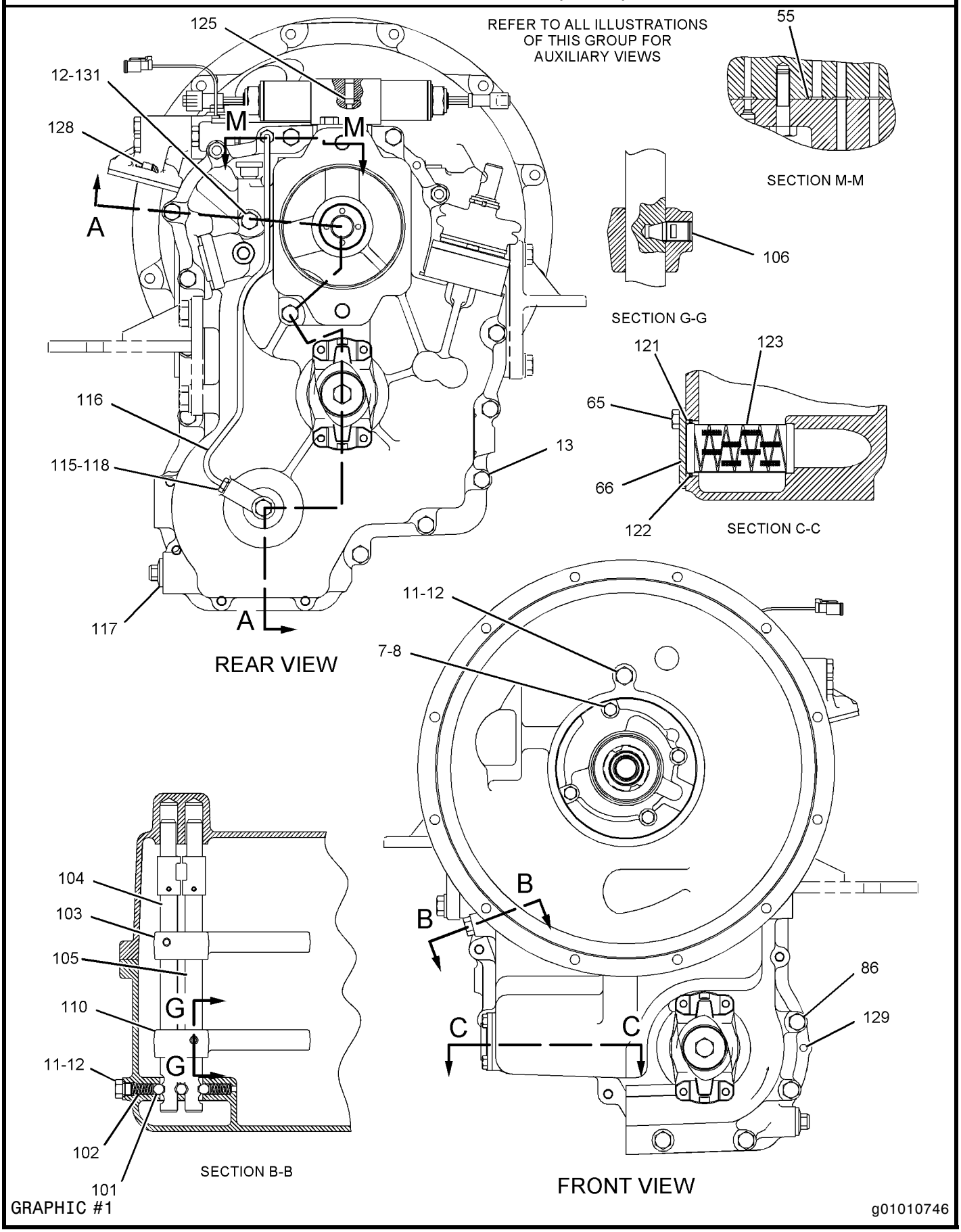


GRAPHIC #1 g01010746

## 201-8562 TRANSMISSION GP-DIRECT DRIVE *(contd.)* i01981326

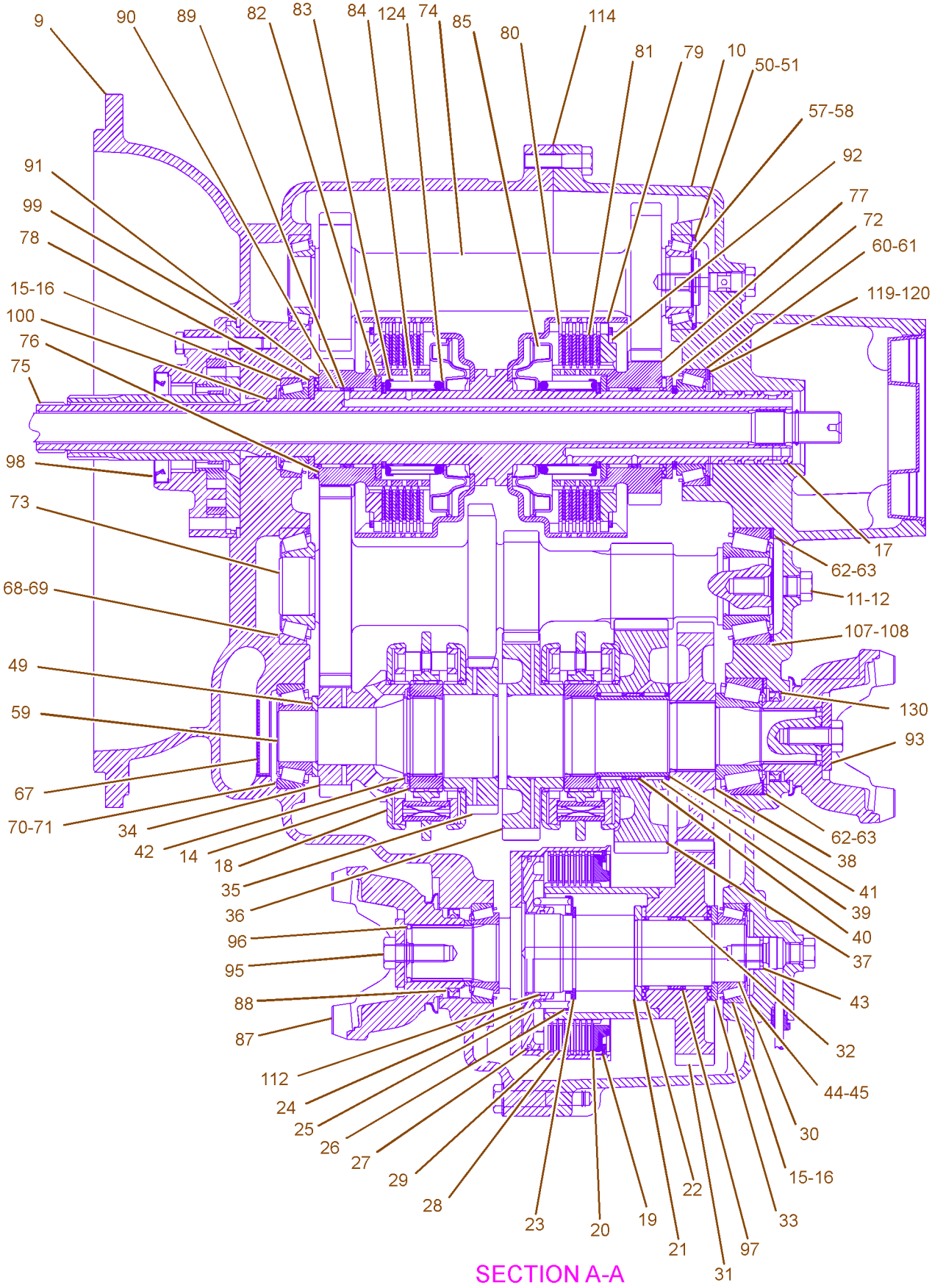


GRAPHIC #2 g01010748

## 201-8562 TRANSMISSION GP-DIRECT DRIVE *(contd.)* i01981326

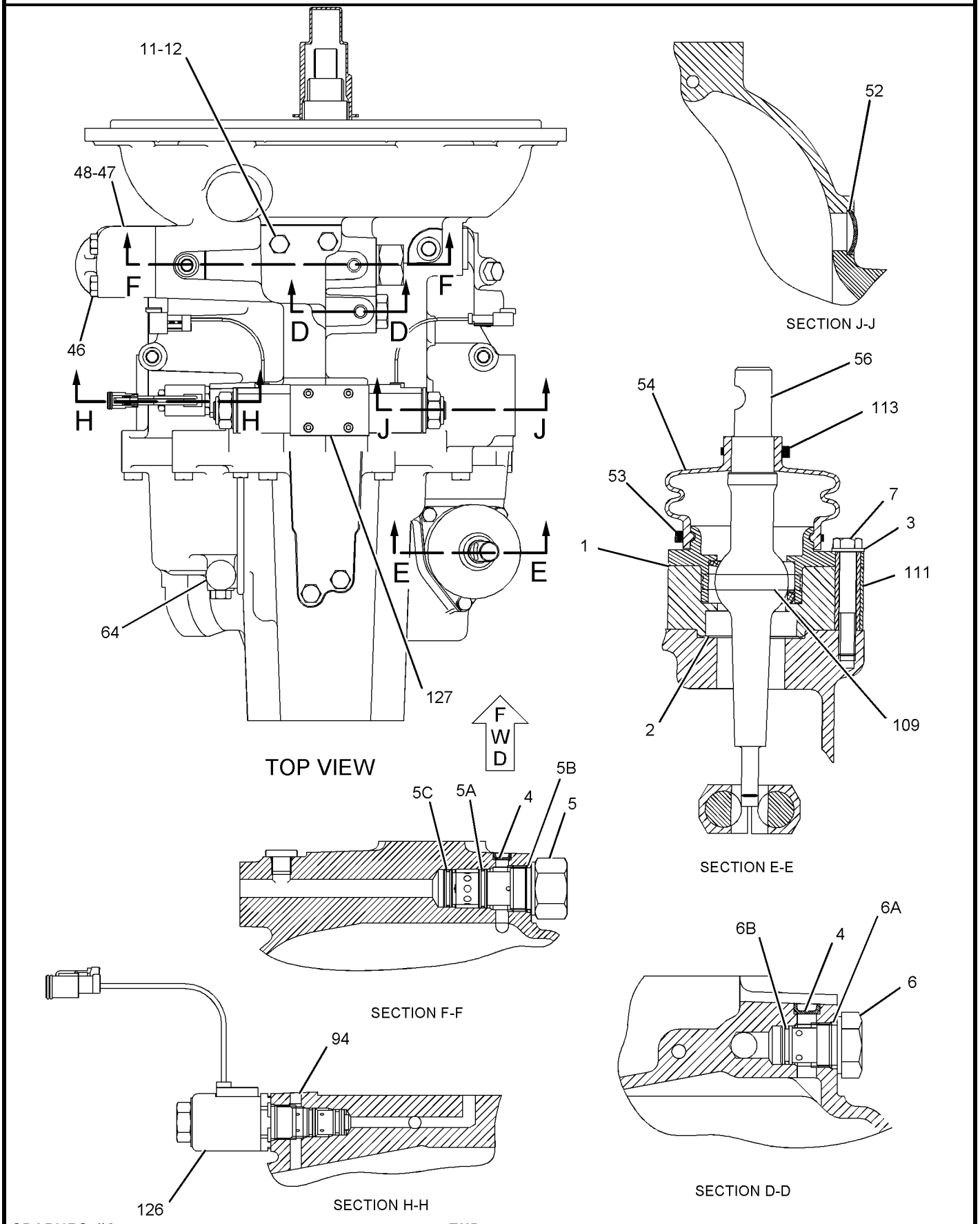


GRAPHIC #3 **<END>** g01010751

# POWER TRAIN

## 192-0849 TRANSMISSION GP-POWER SHIFT—ALL WHEEL DRIVE

**S/N: BXC1-UP; DSX1-UP**
**PART OF 202-7432 TRANSMISSION & MOUNTING GP**
**AN ATTACHMENT**

**SMCS-3030** **i01797259**

| NOTE | REF NO | GRAPHIC REF | PART NUMBER | QTY | PART NAME 1 2 3 4 5 6 (PRODUCT LEVEL) | SEE PAGE |
|---|---|---|---|---|---|---|
| | 1 | 2 | **178-9566** | 2 | SPRING-PISTON | |
| M | 2 | 1 | **8C-5748** | 4 | BOLT (M8X1.25X55MM) | |
| | 3 | 1,2 | **161-3249** | 1 | RING-RETAINING | |
| | 4 | 1,2 | **8T-1581** | 1 | CONE | |
| | 5 | 1,3 | **150-7732** | 2 | SEAL-O-RING | |
| M | 6 | 3 | **8T-0271** | 2 | BOLT-SOCKET HEAD (M10X1.5X35MM) | |
| | 7 | 2,3 | **8T-1580** | 1 | CUP | |
| | 8 | 3 | **4F-7952** | 1 | SEAL-O-RING | |
| | 9 | 1 | **147-0218** | 1 | TUBE AS-TRANSFER | |
| Y | 10 | 1 | **148-8988** | 1 | VALVE GP-SOLENOID | 263 |
| M | 11 | 1 | **8C-8545** | 2 | BOLT-SOCKET HEAD | |
| | 12 | 1,2 | **120-9762** | 5 | SEAL-O-RING | |
| Y | 13 | 1 | **148-8986** | 1 | VALVE GP-SOLENOID | 262 |
| | 14 | 1 | **147-0253** | 1 | CASE AS-REAR | |
| | | 1 | **9W-0717** | 11 | PLUG | |
| | 15 | 1 | **121-7398** | 1 | SPACER (2MM THK) | |
| B | | 1 | **121-7402** | 1 | SHIM (0.6MM THK) | |
| B | | 1 | **121-7401** | 1 | SHIM (0.18MM THK) | |
| B | | 1 | **121-7400** | 1 | SHIM (0.08MM THK) | |
| B | | 1 | **121-7399** | 1 | SHIM (0.05MM THK) | |
| | 16 | 3 | **7T-2651** | 1 | STRAINER | |
| | 17 | 3 | **9W-5460** | 1 | RING | |
| Y | 18 | 3 | **147-0209** | 1 | VALVE GP-RELIEF | 260 |
| | 19 | 3 | **121-7396** | 1 | VALVE GP-RELIEF | |
| | | 3 | **6V-4589** | 1 | SEAL-O-RING | |
| | | 3 | **8L-2746** | 1 | SEAL-O-RING | |
| | 20 | 1 | **7T-2646** | 2 | SPACER (2.02MM THK) | |
| B | | 1 | **6T-9166** | 2 | SHIM (0.051MM THK) | |
| B | | 1 | **6T-9165** | 2 | SHIM (0.076MM THK) | |
| B | | 1 | **6T-9164** | 2 | SHIM (0.178MM THK) | |
| | | 1 | **6T-9163** | 2 | SHIM (0.599MM THK) | |
| | 21 | 3 | **6T-9202** | 2 | PLUG | |
| Y | 22 | 3 | **121-4036** | 2 | VALVE GP-SOLENOID | 261 |
| | 23 | 3 | **106-9861** | 1 | PLATE-COVER | |
| | 24 | 2 | **122-1878** | 1 | RING-SEAL | |
| | 25 | 1 | **147-0201** | 1 | TUBE AS | |
| | 26 | 1,3 | **7W-3556** | 12 | WASHER (146.03X213X8MM THK) | |
| | 27 | 1,3 | **147-0234** | 6 | BOLT (9/16-18X21MM) | |
| B | 28 | 1 | **1U-8846** | | SEALANT-GASKET | |
| | 29 | 1 | **5P-8066** | 2 | SEAL-O-RING | |
| M | 30 | 1,2 | **6V-8097** | 3 | BOLT (M12X1.75X30MM) | |
| | 31 | 1,2 | **7T-3195** | 3 | WASHER (6.35MM THK) | |
| | 32 | 1 | **122-6787** | 2 | YOKE AS | |
| | | 1 | **123-1377** | 1 | GUARD | |
| | 33 | 1 | **8T-2193** | 2 | SEAL-LIP (48.0MM ID) | |
| | 34 | 1 | **121-7385** | 1 | PUMP GP-TRANSMISSION | |
| | | 1 | **124-6612** | 1 | SEAL-LIP TYPE (57.15MM ID) | |
| | 35 | 1 | **9P-9150** | 4 | WASHER (8.25X18X.84MM THK) | |
| | 36 | 2 | **173-0332** | 1 | SHAFT AS | |
| | | 2 | **163-9091** | 1 | PLUG | |
| | 37 | 1 | **7X-4741** | 1 | SEAL (140MM ID) | |
| | 38 | 1,3 | **9S-4185** | 3 | PLUG | |
| | 39 | 1,3 | **3K-0360** | 3 | SEAL-O-RING | |
| | 40 | 1,2 | **123-8906** | 5 | CUP-TAPERED ROLLER | |
| | 41 | 1,2 | **123-8905** | 5 | CONE-TAPERED | |

## 192-0849 TRANSMISSION GP-POWER SHIFT *(contd.)* i01797259

| NOTE | REF NO | GRAPHIC REF | PART NUMBER | QTY | PART NAME 1 2 3 4 5 6 (PRODUCT LEVEL) | SEE PAGE |
|---|---|---|---|---|---|---|
| | 42 | 1,2 | **121-0694** | 2 | WASHER-THRUST (4MM THK) | |
| | 43 | 1,2 | **172-5317** | 6 | BEARING-SPECIAL | |
| | 44 | 2 | **123-8913** | 2 | BEARING-ROLLER | |
| | 45 | 2 | **147-0224** | 1 | GEAR (45 AND 32 TEETH) | |
| | 46 | 1,2 | **8E-5707** | 7 | PLATE-END | |
| | 47 | 1,2 | **6V-8757** | 6 | RING | |
| | 48 | 1,2 | **6T-9194** | 45 | PLATE | |
| | 49 | 1,2 | **6Y-7929** | 37 | DISC-FRICTION | |
| | 50 | 1,2 | **9U-8875** | 6 | RING-RETAINING | |
| | 51 | 1,2 | **121-2500** | 4 | WASHER-THRUST (4MM THK) | |
| | 52 | 1,2 | **147-0202** | 2 | GEAR (45 AND 24 TEETH) | |
| | 53 | 2 | **147-0257** | 1 | SHAFT AS-INPUT | |
| | | 2 | **123-2920** | 3 | PLUG | |
| | 54 | 2 | **9U-8886** | 4 | RING-SEAL (44.95MM ID) | |
| | 55 | 2 | **123-8910** | 1 | CUP-TAPERED ROLLER | |
| | 56 | 2 | **123-8909** | 1 | CONE-TAPERED ROLLER | |
| | 57 | 1,2 | **7T-6655** | 4 | BEARING | |
| | 58 | 1,2 | **147-0259** | 2 | SPACER (18.7MM THK) | |
| | 59 | 1,2 | **147-0238** | 5 | SPRING AS | |
| | 60 | 1,2 | **6V-5100** | 5 | SEAL-O-RING | |
| | 61 | 1,2 | **147-0228** | 4 | PISTON-CLUTCH | |
| | 62 | 1,2 | **6T-9196** | 7 | SEAL | |
| | 63 | 2 | **122-1886** | 1 | RING-SEAL | |
| | 64 | 2 | **123-8907** | 3 | CONE-TAPERED ROLLER | |
| | 65 | 2 | **123-8908** | 3 | CUP-TAPERED ROLLER | |
| | 66 | 2 | **147-0212** | 1 | GEAR (42 TEETH) | |
| | 67 | 2 | **147-0216** | 1 | GEAR (38 TEETH) | |
| | 68 | 2 | **147-0203** | 3 | WASHER-THRUST (5MM THK) | |
| | 69 | 2 | **147-0258** | 1 | SPACER (16MM THK) | |
| | 70 | 2 | **147-0215** | 1 | GEAR (45 AND 19 TEETH) | |
| | 71 | 2 | **172-6050** | 6 | BEARING-SPECIAL | |
| | 72 | 2 | **122-1877** | 3 | WASHER-THRUST (4MM THK) | |
| | 73 | 1,2 | **6Y-1192** | 7 | RING-SEAL (32MM ID) | |
| | 74 | 2 | **123-8912** | 6 | BEARING-ROLLER | |
| | 75 | 3 | **9S-4191** | 14 | PLUG | |
| | 76 | 2 | **147-0264** | 1 | GEAR (45 AND 28 TEETH) | |
| | 77 | 2 | **147-0260** | 1 | RETAINER-SPRING | |
| | 78 | 2 | **095-0928** | 1 | RING-RETAINING | |
| | 79 | 2 | **147-0205** | 2 | WASHER | |
| | 80 | 2 | **147-0248** | 1 | SPACER (15.8MM THK) | |
| | 81 | 2 | **157-2090** | 1 | GEAR (38 TEETH) | |
| | 82 | 2 | **172-6743** | 2 | BEARING-SPECIAL | |
| | 83 | 2 | **147-0242** | 1 | GEAR (32 TEETH) | |
| | 84 | 2 | **150-3757** | 2 | BEARING | |
| | 85 | 2 | **009-2062** | 2 | SEAL-O-RING | |
| | 86 | 2 | **157-2088** | 2 | PISTON AS | |
| | 87 | 2 | **147-0261** | 1 | SHAFT AS-OUTPUT (REAR) | |
| | | 2 | **9W-0717** | 2 | PLUG | |
| | 88 | 2 | **095-0927** | 1 | RING-RETAINING | |
| | 89 | 2 | **122-1884** | 1 | SPACER (8MM THK) | |
| | 90 | 2 | **147-0210** | 1 | GEAR (45 AND 36 TEETH) | |
| | 91 | 2 | **147-0207** | 1 | SHAFT AS-OUTPUT (FRONT) | |
| | 92 | 1,2 | **122-1879** | 2 | SPACER (2MM THK) | |
| B | | 1,2 | **104-3288** | 2 | SHIM (0.05MM THK) | |
| B | | 1,2 | **121-2059** | 2 | SHIM (0.08MM THK) | |
| B | | 1,2 | **121-2060** | 2 | SHIM (0.18MM THK) | |
| B | | 1,2 | **121-2061** | 2 | SHIM (0.6MM THK) | |
| M | 93 | 3 | **6V-8210** | 2 | BOLT (M8X1.25X16 MM) | |
| | 94 | 3 | **147-0236** | 1 | TUBE AS-TRANSFER | |

## 192-0849 TRANSMISSION GP-POWER SHIFT *(contd.)* i01797259

| NOTE | REF NO | GRAPHIC REF | PART NUMBER | QTY | PART NAME 1 2 3 4 5 6 (PRODUCT LEVEL) | SEE PAGE |
|---|---|---|---|---|---|---|
| | 95 | 1 | **147-0226** | 1 | TUBE AS | |
| | 96 | 1 | **147-0256** | 1 | SHAFT AS-REVERSE | |
| | | 1 | **9W-0717** | 1 | PLUG | |
| | | 1 | **147-0270** | 1 | ORIFICE | |
| | 97 | 3 | **147-0211** | 1 | ELBOW AS | |
| | | 3 | **3G-6927** | 1 | ADAPTER | |
| | 98 | 2 | **6Y-7957** | 8 | DISC-FRICTION | |
| | 99 | 2 | **147-0227** | 1 | PISTON-CLUTCH | |
| M | 100 | 3 | **6V-8335** | 16 | BOLT-SELF LOCKING (M10X1.5X40MM) | |
| | 101 | 3 | **147-0262** | 4 | WASHER (1.5MM THK) | |
| | 102 | 3 | **147-0266** | 2 | BOLT (3/4-16X21MM) | |
| | 103 | 3 | **189-5746** | 1 | SENSOR GP-SPEED | |
| | | 3 | **102-8802** | 1 | KIT-RECEPTACLE (2 PIN) | |
| | | 3 | **3E-3365** | 1 | WEDGE-RECEPTACLE LOCK (2 PIN) | |
| | | 3 | **186-3735** | 2 | PIN-CONNECTOR | |
| E | | 3 | **9X-1386** | | SLEEVE (14CM) | |
| | | 3 | **171-5349** | 1 | STRAP-MARKER | |
| | 104 | 3 | **1V-6341** | 1 | SEAL | |
| | 105 | 3 | **3J-1907** | 14 | SEAL-O-RING | |
| M | 106 | 3 | **8T-0643** | 1 | BOLT (M10X1.50X80MM) | |
| | 107 | 3 | **6Y-1896** | 1 | PLUG AS-DRAIN | |
| | | 3 | **5P-6718** | 1 | SEAL-O-RING | |
| | 108 | 1,2,3 | **205-9244** | 4 | PLUG | |
| M | 109 | 3 | **9X-6615** | 12 | BOLT (M5X.8X30MM) | |
| | 110 | 3 | **7T-3253** | 2 | DOWEL | |
| | 111 | 3 | **7T-3251** | 1 | BREATHER | |
| | 112 | 1 | **192-0850** | 1 | CASE AS | |
| | | 1 | **9W-0717** | 4 | PLUG | |
| | | 1 | **147-0268** | 4 | PLUG | |
| | 113 | 1 | **122-1883** | 1 | SPACER (5MM THK) | |
| | 114 | 2 | **121-0885** | 1 | RETAINER | |
| Y | 115 | 1 | **199-3117** | 1 | VALVE GP-SOLENOID | 264 |

B-USE AS REQUIRED
E-ORDER BY THE CENTIMETER
M-METRIC PART
Y-SEPARATE ILLUSTRATION

## 192-0849 TRANSMISSION GP-POWER SHIFT *(contd.)* i01797259

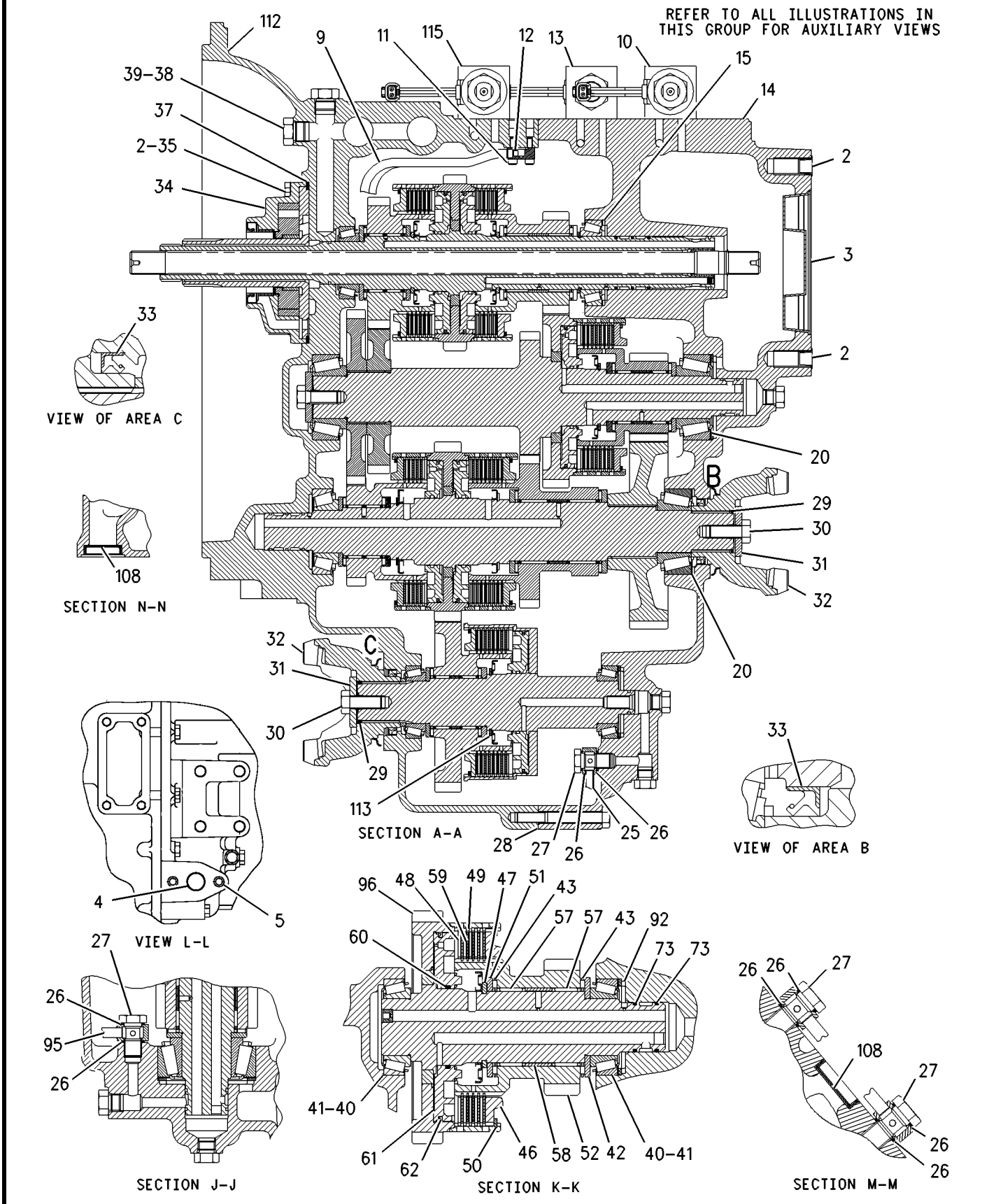


GRAPHIC #1 g00927745

## 192-0849 TRANSMISSION GP-POWER SHIFT *(contd.)* i01797259

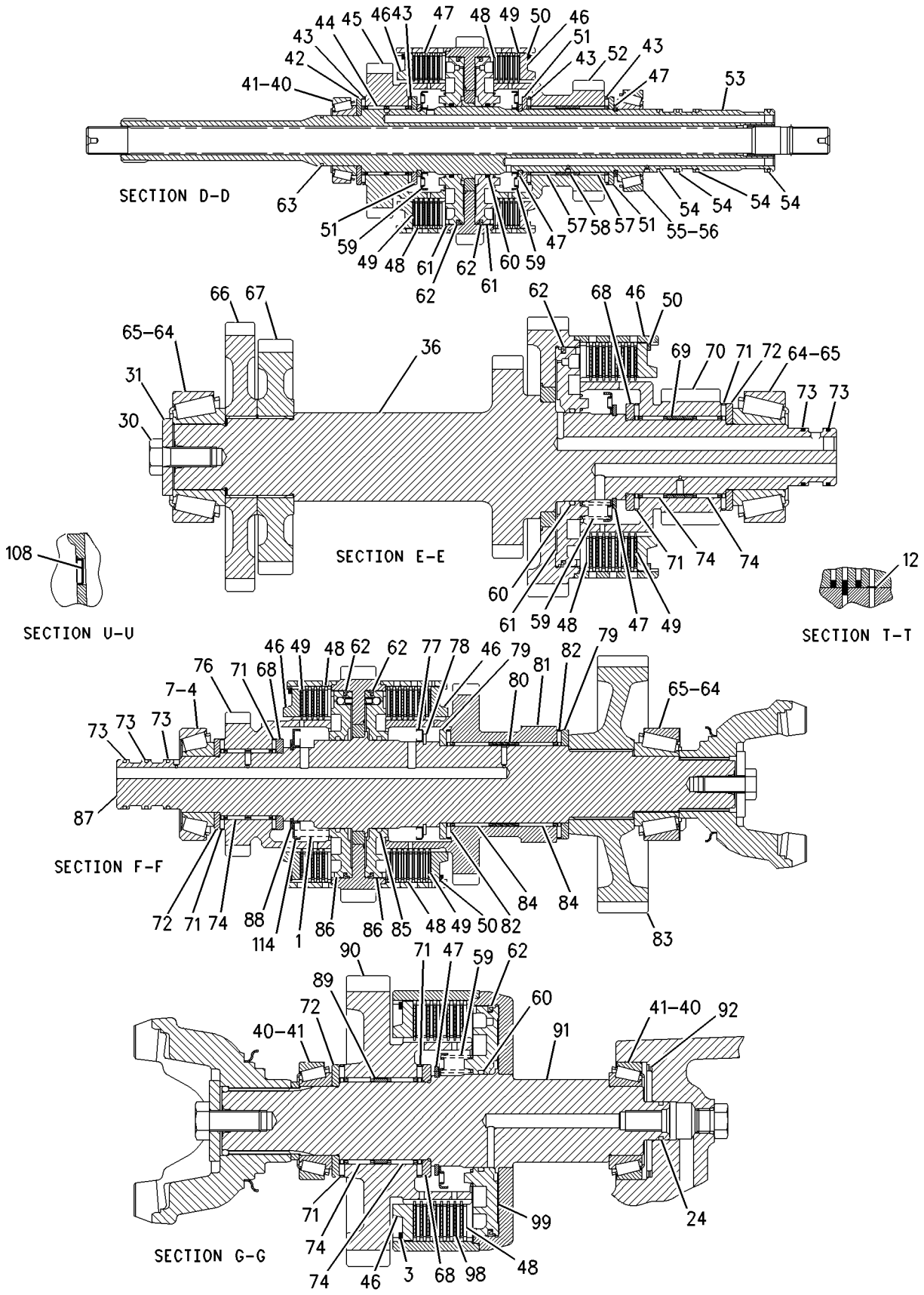


GRAPHIC #2 g00797176

**192-0849 TRANSMISSION GP-POWER SHIFT** *(contd. )* **i01797259**

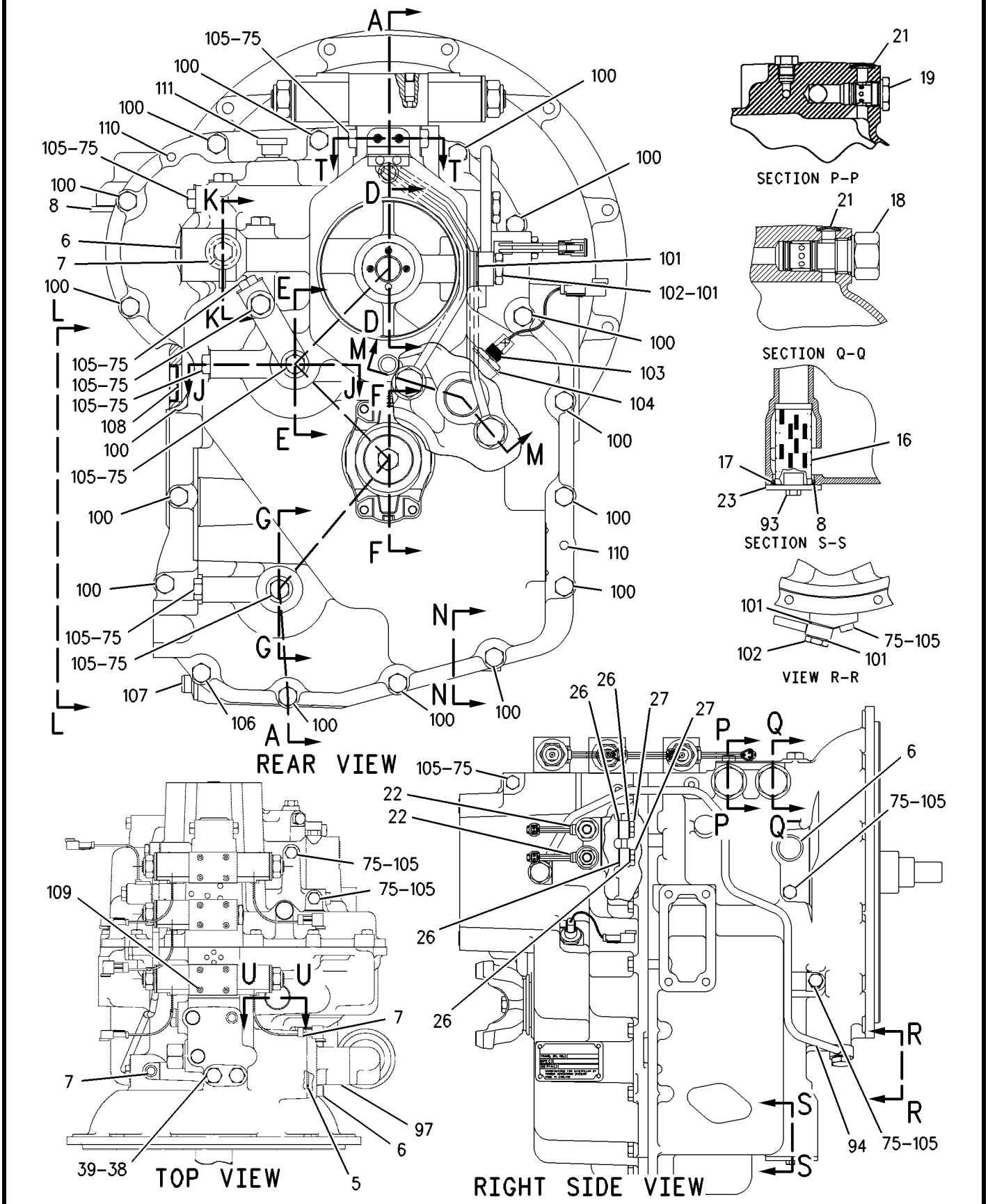


GRAPHIC #3 **<END>** g00797077

# POWER TRAIN

## 147-0209 VALVE GP-RELIEF

**S/N: BXC1-UP; DSX1-UP**
**PART OF 192-0849 TRANSMISSION GP-POWER SHIFT**
**AN ATTACHMENT**

**SMCS-3133, 3182, 3210, 3213** **i00724885**

| NOTE | REF NO | GRAPHIC REF | PART NUMBER | QTY | PART NAME 1 2 3 4 5 6 (PRODUCT LEVEL) | SEE PAGE |
|---|---|---|---|---|---|---|
| | 1 | 1 | **7X-4744** | 1 | SEAL-O-RING | |
| | 2 | 1 | **6V-9178** | 1 | SEAL-O-RING (25.12MM ID) | |
| | 3 | 1 | **106-9586** | 1 | SEAL-O-RING (23.52MM ID) | |

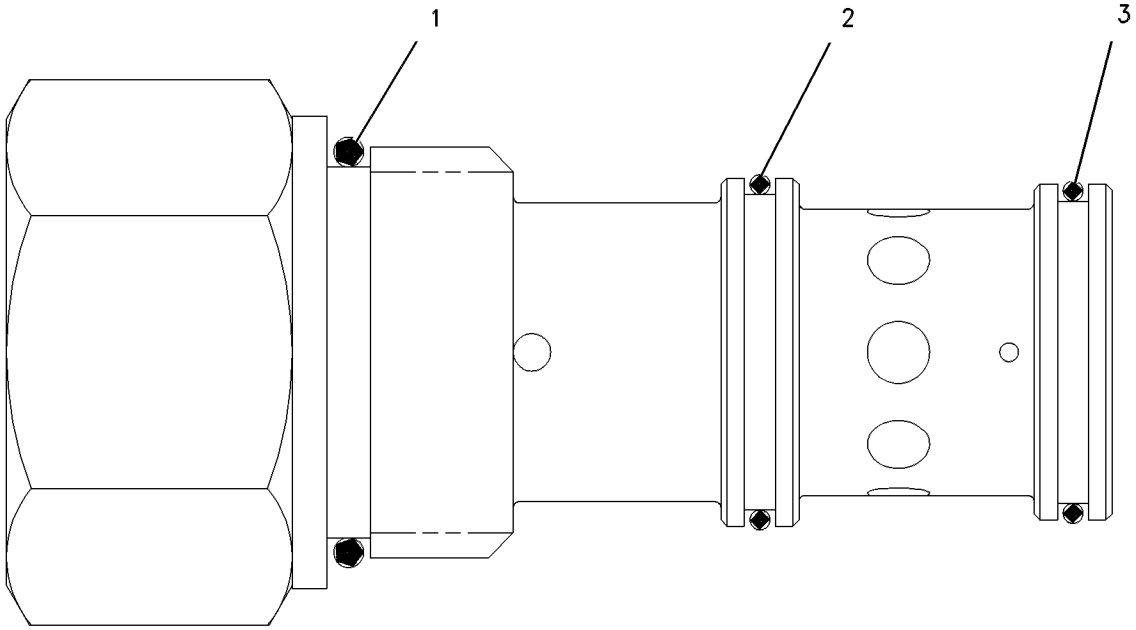


GRAPHIC #1 **<END>** g00304718

# *121-4036* VALVE GP-SOLENOID

**S/N: BXC1-UP; DSX1-UP**

**PART OF 201-8562 TRANSMISSION GP-DIRECT DRIVE, 192-0849 TRANSMISSION GP-POWER SHIFT**

**AN ATTACHMENT**

**SMCS-3174** **i01745053**

| NOTE | REF NO | GRAPHIC REF | PART NUMBER | QTY | PART NAME 1 2 3 4 5 6 (PRODUCT LEVEL) | SEE PAGE |
|---|---|---|---|---|---|---|
| | 1 | 1 | **3J-9196** | 1 | NUT-JAM (1/2-20 THD) | |
| | 2 | 1 | **122-1672** | 1 | CARTRIDGE AS | |
| | 3 | 1 | **130-0013** | 1 | COIL AS | |
| | 4 | 1 | **1S-9593** | 2 | STRAP-CABLE | |
| | | 1 | **102-8807** | 1 | KIT-CONNECTING PLUG (2 PIN) | |
| | | | | | (KIT SERVICES RECEPTACLE AS AND WEDGE) | |
| | | 1 | **3E-3362** | 1 | WEDGE-PLUG LOCK (2 PIN) | |
| | | 1 | **186-3736** | 2 | SOCKET-CONNECTOR | |
| | | | | | AVAILABLE REPAIR KIT(S): | |
| | | | **122-1135** | 1 | KIT-SEAL | |

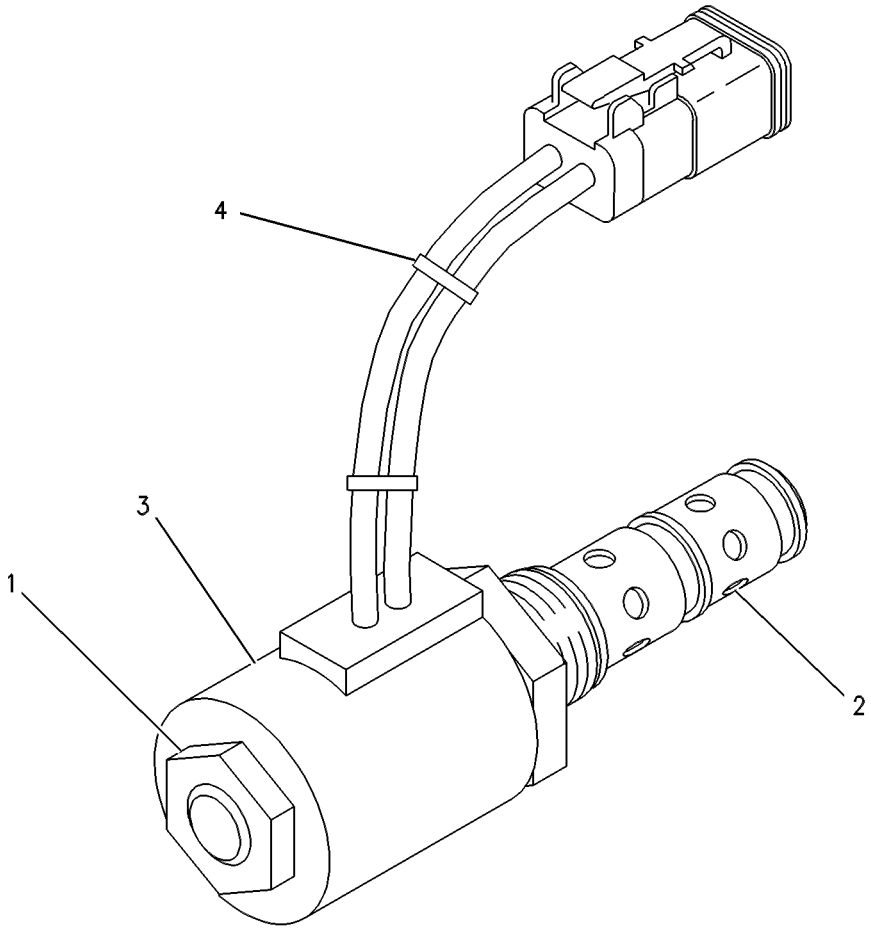


GRAPHIC #1 **<END>** g00131539

# POWER TRAIN

## *148-8986* VALVE GP-SOLENOID

**S/N: BXC1-UP; DSX1-UP**
**PART OF 192-0849 TRANSMISSION GP-POWER SHIFT**
**AN ATTACHMENT**

**SMCS-3174** **i01710046**

| NOTE | REF NO | GRAPHIC REF | PART NUMBER | QTY | PART NAME 1 2 3 4 5 6 (PRODUCT LEVEL) | SEE PAGE |
|---|---|---|---|---|---|---|
| | 1 | 1 | **117-2911** | 1 | COIL AS | |
| | | 1 | **1S-9593** | 2 | STRAP-CABLE | |
| | | 1 | **102-8802** | 1 | KIT-RECEPTACLE (2 PIN) | |
| | | | | | (KIT SERVICES RECEPTACLE AS AND WEDGE) | |
| | | 1 | **3E-3365** | 1 | WEDGE-RECEPTACLE LOCK (2 PIN) | |
| | | 1 | **186-3735** | 2 | PIN-CONNECTOR | |
| | 2 | 1 | **061-8639** | 2 | SEAL-O-RING (15.54MM ID) | |
| | 3 | 1 | **8L-2779** | 4 | SEAL-O-RING | |
| | 4 | 1 | **202-0040** | 1 | NUT-LOCKING | |
| | 5 | 1 | **150-4932** | 1 | PLUG-ORIFICE | |
| | 6 | 1 | **143-4655** | 1 | WASHER (M18.4X24.8X0.8MM THK) | |

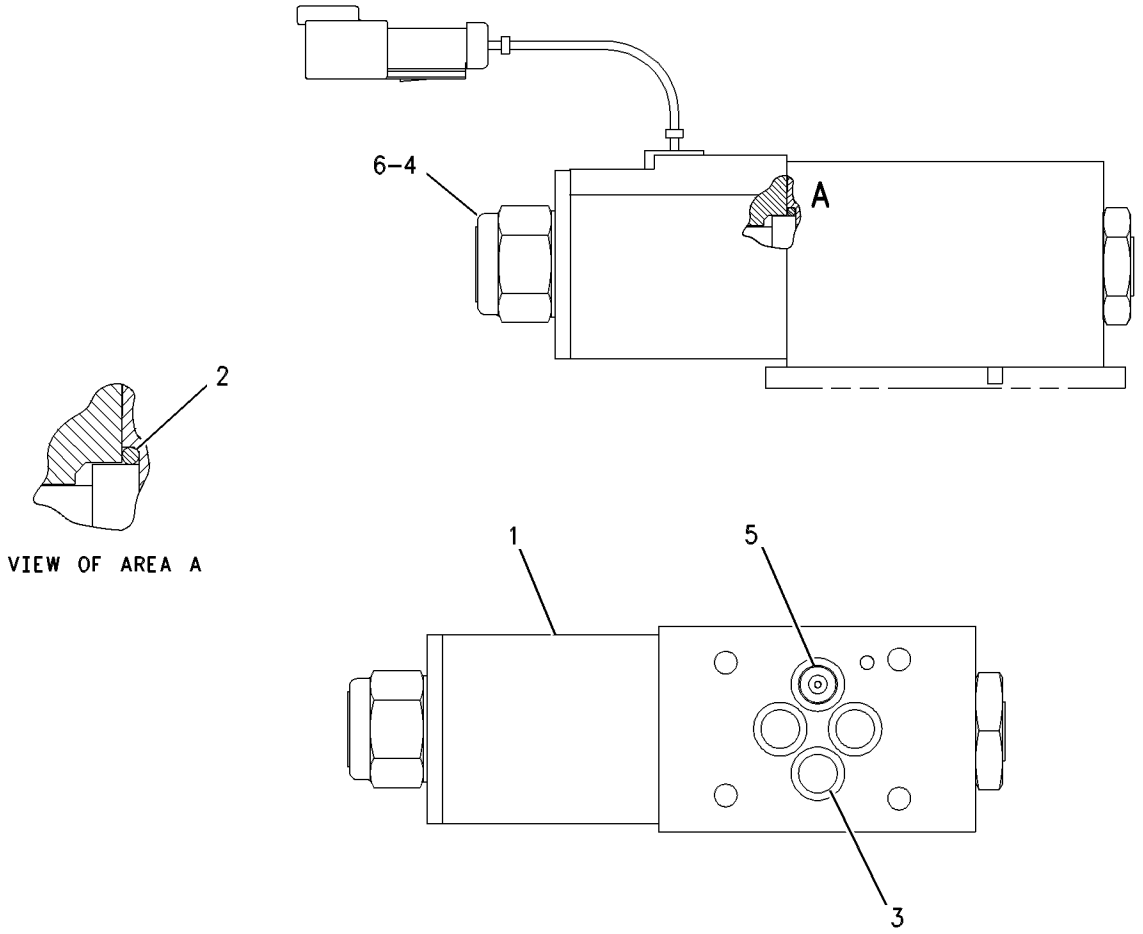


GRAPHIC #1 **<END>** g00304719

# POWER TRAIN

## *148-8988* VALVE GP-SOLENOID

**S/N: BXC1-UP; DSX1-UP**
**PART OF 192-0849 TRANSMISSION GP-POWER SHIFT**
**AN ATTACHMENT**

**SMCS-3174** **i01710043**

| NOTE | REF NO | GRAPHIC REF | PART NUMBER | QTY | PART NAME 1 2 3 4 5 6 (PRODUCT LEVEL) | SEE PAGE |
|---|---|---|---|---|---|---|
| | 1 | 1 | **117-2911** | 1 | COIL AS | |
| | | 1 | **1S-9593** | 2 | STRAP-CABLE | |
| | | 1 | **102-8802** | 1 | KIT-RECEPTACLE (2 PIN) | |
| | | | | | (KIT SERVICES RECEPTACLE AS AND WEDGE) | |
| | | 1 | **3E-3365** | 1 | WEDGE-RECEPTACLE LOCK (2 PIN) | |
| | | 1 | **186-3735** | 2 | PIN-CONNECTOR | |
| | 2 | 1 | **130-0912** | 1 | COIL AS | |
| | | 1 | **1S-9593** | 2 | STRAP-CABLE | |
| | | 1 | **102-8803** | 1 | KIT-RECEPTACLE (3 PIN) | |
| | | | | | (KIT SERVICES RECEPTACLE AS AND WEDGE) | |
| | | 1 | **3E-3371** | 1 | WEDGE-RECEPTACLE LOCK (3 PIN) | |
| | | 1 | **186-3735** | 2 | PIN-CONNECTOR | |
| | | 1 | **8T-8737** | 1 | PLUG-SEAL | |
| | 3 | 1 | **061-8639** | 2 | SEAL-O-RING (15.54MM ID) | |
| | 4 | 1 | **8L-2779** | 4 | SEAL-O-RING | |
| | 5 | 1 | **202-0040** | 2 | NUT-LOCKING | |
| | 6 | 1 | **150-4932** | 1 | PLUG-ORIFICE | |
| | 7 | 1 | **143-4655** | 2 | WASHER (M18.4X24.8X0.8MM THK) | |

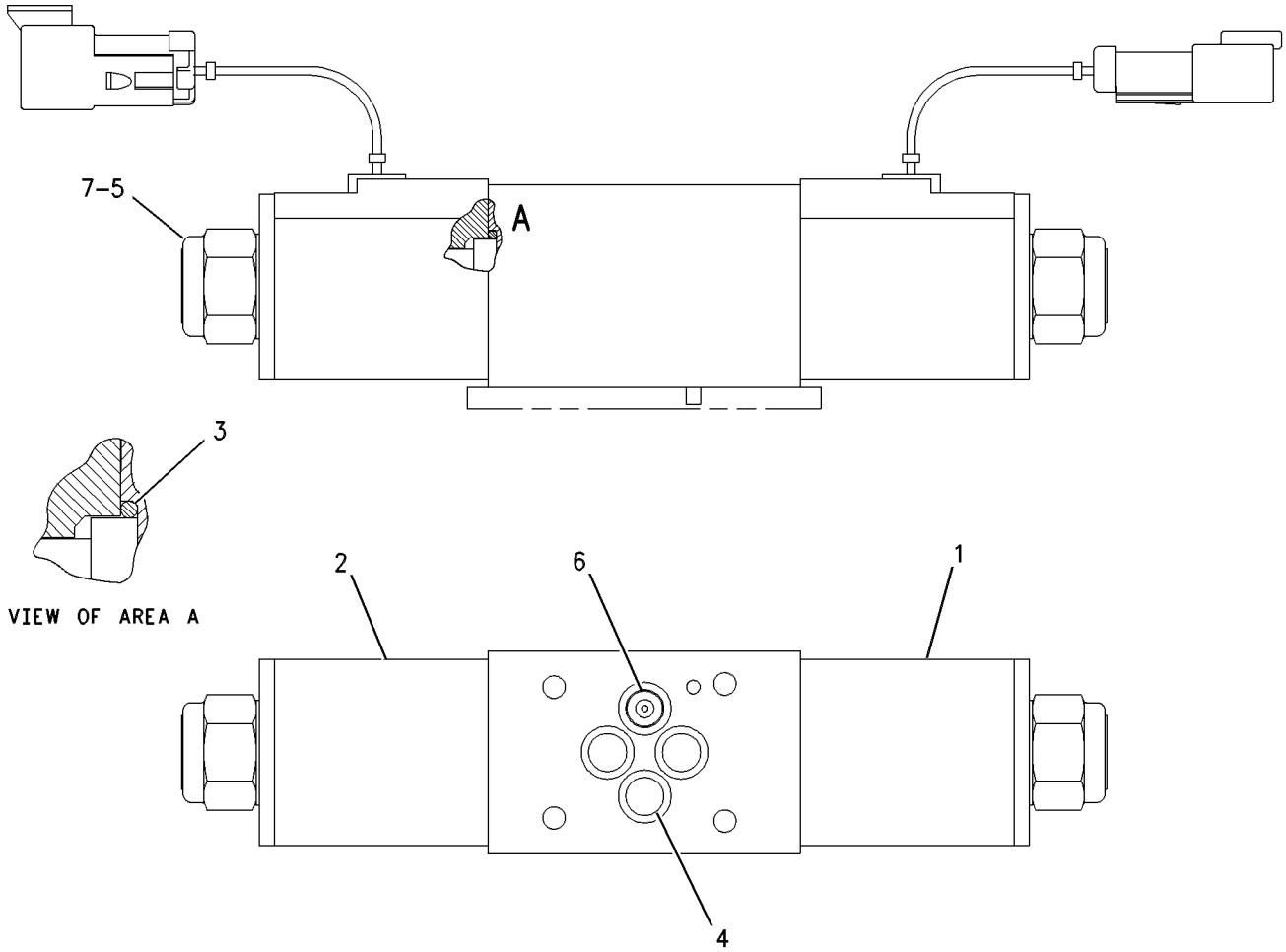


GRAPHIC #1 **<END>** g00304722

# POWER TRAIN

## *199-3117* VALVE GP-SOLENOID

**S/N: BXC1-UP; DSX1-UP**
**PART OF 192-0849 TRANSMISSION GP-POWER SHIFT**
**AN ATTACHMENT**

**SMCS-3174** **i01828991**

| NOTE | REF NO | GRAPHIC REF | PART NUMBER | QTY | PART NAME 1 2 3 4 5 6 (PRODUCT LEVEL) | SEE PAGE |
|---|---|---|---|---|---|---|
| | 1 | 1 | **117-2911** | 1 | COIL AS | |
| | | 1 | **1S-9593** | 2 | STRAP-CABLE | |
| | | 1 | **102-8802** | 1 | KIT-RECEPTACLE (2 PIN) | |
| | | 1 | **3E-3365** | 1 | WEDGE-RECEPTACLE LOCK (2 PIN) | |
| | | 1 | **8T-8729** | 2 | PIN-CONNECTOR | |
| | 2 | 1 | **130-0912** | 1 | COIL AS | |
| | | 1 | **1S-9593** | 2 | STRAP-CABLE | |
| | | 1 | **102-8803** | 1 | KIT-RECEPTACLE (3 PIN) | |
| | | 1 | **3E-3371** | 1 | WEDGE-RECEPTACLE LOCK (3 PIN) | |
| | | 1 | **8T-8729** | 2 | PIN-CONNECTOR | |
| | | 1 | **8T-8737** | 1 | PLUG-SEAL | |
| | 3 | 1 | **061-8639** | 2 | SEAL-O-RING | |
| | 4 | 1 | **8L-2779** | 4 | SEAL-O-RING | |
| | 5 | 1 | **202-0040** | 2 | NUT-LOCKING | |
| | 6 | 1 | **218-3597** | 1 | PLUG-ORIFICE | |
| | 7 | 1 | **143-4655** | 2 | WASHER (M18.4X24.8X0.8MM THK) | |

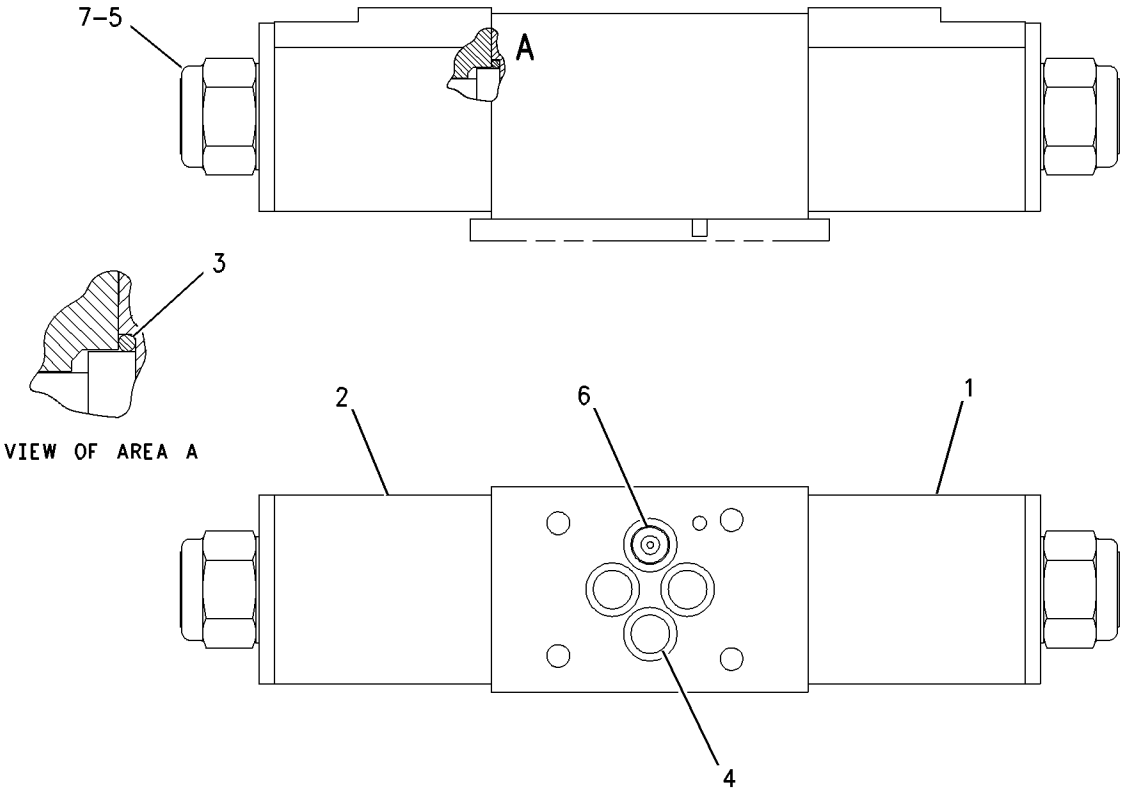


GRAPHIC #1 **<END>** g00817783

# POWER TRAIN

## *223-8181* VALVE GP-SOLENOID

**S/N: BXC1-UP; DSX1-UP**
**PART OF 201-8562 TRANSMISSION GP-DIRECT DRIVE**
**AN ATTACHMENT**

**SMCS-3174** **i01950403**

| NOTE | REF NO | GRAPHIC REF | PART NUMBER | QTY | PART NAME 1 2 3 4 5 6 (PRODUCT LEVEL) | SEE PAGE |
|---|---|---|---|---|---|---|
| | 1 | 1 | **117-2911** | 1 | COIL AS | |
| | | 1 | **1S-9593** | 2 | STRAP-CABLE | |
| | | 1 | **102-8802** | 1 | KIT-RECEPTACLE (2 PIN) | |
| | | 1 | **3E-3365** | 1 | WEDGE-RECEPTACLE LOCK (2 PIN) | |
| | | 1 | **186-3735** | 2 | PIN-CONNECTOR | |
| | 2 | 1 | **130-0912** | 1 | COIL AS | |
| | | 1 | **1S-9593** | 2 | STRAP-CABLE | |
| | | 1 | **102-8803** | 1 | KIT-RECEPTACLE (3 PIN) | |
| | | 1 | **3E-3371** | 1 | WEDGE-RECEPTACLE LOCK (3 PIN) | |
| | | 1 | **186-3735** | 2 | PIN-CONNECTOR | |
| | | 1 | **8T-8737** | 1 | PLUG-SEAL | |
| | 3 | 1 | **143-6227** | 1 | PLUG-ORIFICE | |
| | 4 | 1 | **202-0040** | 2 | NUT-LOCKING | |
| | 5 | 1 | **061-8639** | 2 | SEAL-O-RING | |
| | 6 | 1 | **143-4655** | 2 | WASHER (M18.4X24.8X0.8MM THK) | |
| | 7 | 1 | **8L-2779** | 4 | SEAL-O-RING | |

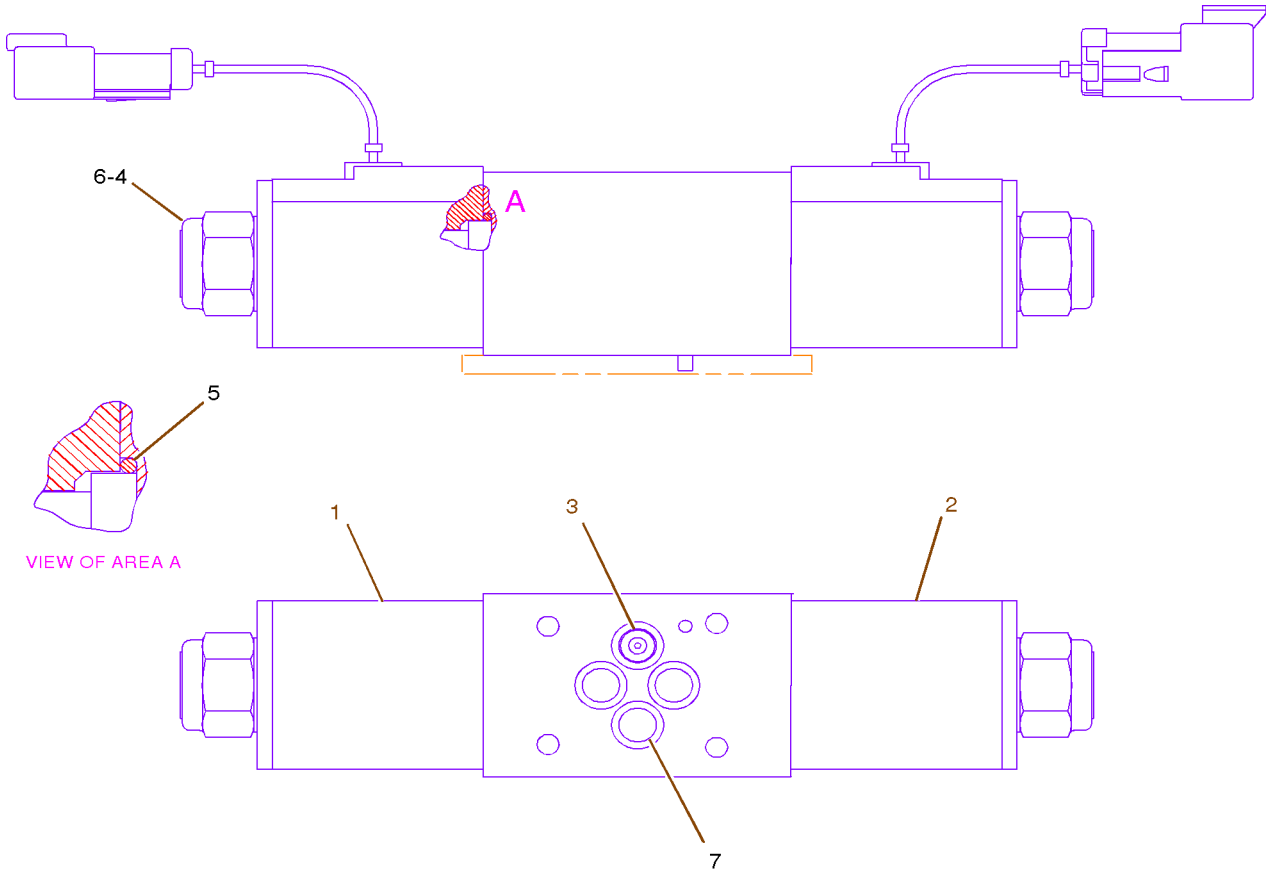


GRAPHIC #1 **<END>** g01010971

# POWER TRAIN

## *6D-0337* VALVE GP-TIRE

**S/N: BXC1-UP; DSX1-UP**

**PART OF 119-7771, 119-7772, 119-7783, 119-7784, 178-7228, 178-7229, 195-6330, 195-6331, 216-9118, 216-9119, 216-9124, 216-9125, 234-2851, 234-2852, 234-2858, 234-2859, 238-9673, 238-9674, 238-9676, 238-9677, 238-9679, 238-9680 WHEEL & TIRE GP**

**AN ATTACHMENT**

**SMCS-4203** **i01954585**

| NOTE | REF NO | GRAPHIC REF | PART NUMBER | QTY | PART NAME 1 2 3 4 5 6 (PRODUCT LEVEL) | SEE PAGE |
|---|---|---|---|---|---|---|
| | 1 | 1 | **6D-0443** | 1 | HOUSING AS-CORE | |
| | 2 | 1 | **2D-2628** | 1 | CORE-VALVE | |
| | 3 | 1 | **2D-2633** | 1 | CAP (VALVE STEM) | |
| | 4 | 1 | **8D-2707** | 2 | SPUD AS | |
| | | | | | (EACH INCLUDES) | |
| | 5 | 1 | **2D-2629** | 1 | GROMMET | |
| | 6 | 1 | **2D-2630** | 1 | WASHER | |
| | 7 | 1 | **2D-2631** | 1 | NUT (.482-26 THD) | |

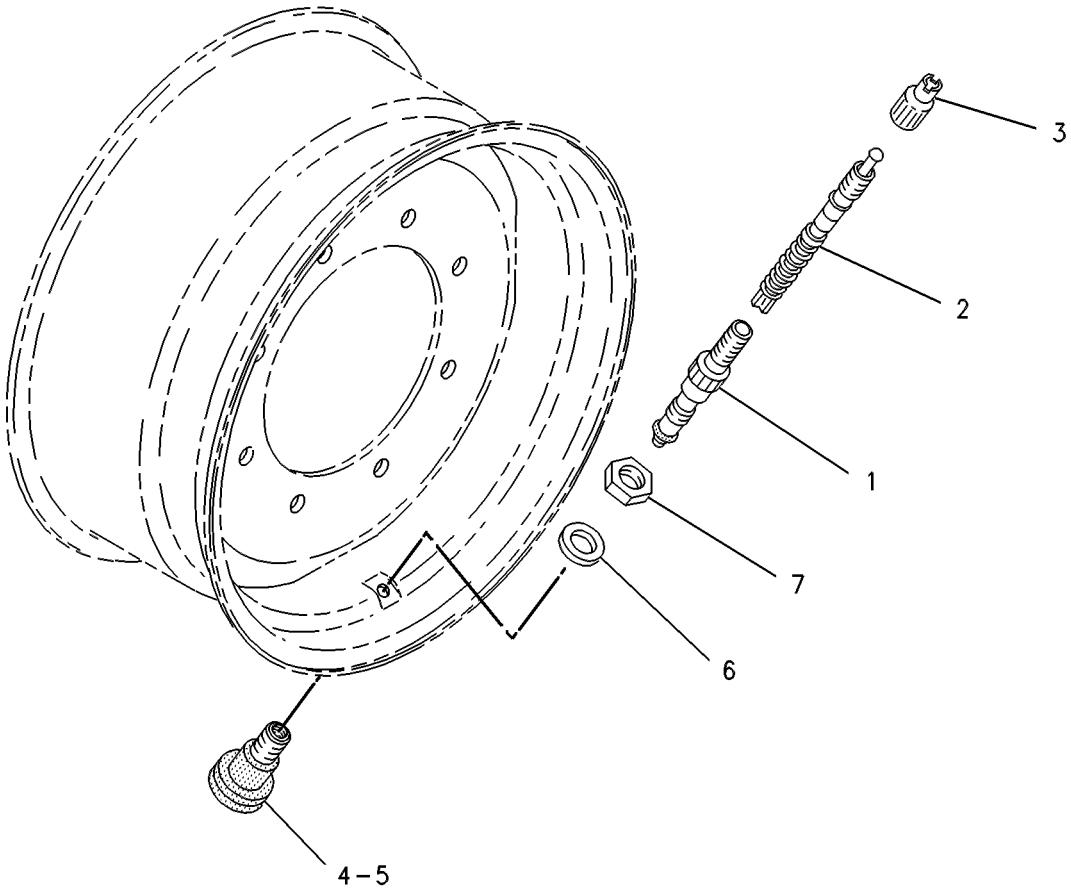


GRAPHIC #1 **<END>** g00121904

## *201-1920* VALVE GP-TIRE

**S/N: BXC1-UP; DSX1-UP**
**PART OF 201-1869, 201-1870, 201-1875, 201-1876, 201-1956, 201-1957, 201-1960, 201-1961, 201-1963, 201-1964, 216-9148, 216-9149, 234-2847, 234-2848 WHEEL & TIRE GP**
**AN ATTACHMENT**

**SMCS-4203** **i01551797**

| NOTE | PART NUMBER | QTY | PART NAME 1 2 3 4 5 6 (PRODUCT LEVEL) | SEE PAGE |
|---|---|---|---|---|
| | **6D-0337** | 1 | VALVE GP-TIRE | |
| | **6D-0443** | 1 | HOUSING AS-CORE | |
| | **2D-2628** | 1 | CORE-VALVE | |
| | **2D-2633** | 1 | CAP | |
| | **8D-2707** | 1 | SPUD AS | |
| | **2D-2629** | 1 | GROMMET | |
| | **2D-2630** | 1 | WASHER-RING | |
| | **2D-2631** | 1 | NUT (.482-26 THD) | |

**<END>**

## *195-6332* WHEEL & TIRE AR—ALL WHEEL DRIVE

**S/N: BXC1-UP; DSX1-UP**
**PART OF 238-6967 WHEEL & TIRE AR**
**AN ATTACHMENT**

**SMCS-4201, 4202, 4203, 4208, 4209** **i01963673**

| NOTE | PART NUMBER | QTY | PART NAME 1 2 3 4 5 6 (PRODUCT LEVEL) | SEE PAGE |
|---|---|---|---|---|
| | **141-7221** | 16 | NUT-HEX FLANGE (3/4-16 THD) | |
| Y | *195-6330* | 1 | WHEEL & TIRE GP (RH) | 275 |
| Y | *195-6331* | 1 | WHEEL & TIRE GP (LH) | 275 |

Y-SEPARATE ILLUSTRATION

**<END>**

## *238-6955* WHEEL & TIRE AR—TWO WHEEL DRIVE

**S/N: BXC1-UP; DSX1-UP**
**AN ATTACHMENT**

**SMCS-4201, 4202, 4203, 4208, 4209** **i01961946**

| NOTE | PART NUMBER | QTY | PART NAME 1 2 3 4 5 6 (PRODUCT LEVEL) | SEE PAGE |
|---|---|---|---|---|
| Y | *178-7227* | 1 | WHEEL & TIRE GP (REAR) | 274 |
| Y | *201-1874* | 1 | WHEEL & TIRE GP (FRONT) | 277 |

Y-SEPARATE ILLUSTRATION

**<END>**

## *238-6956* WHEEL & TIRE AR—ALL WHEEL DRIVE

**S/N: BXC1-UP; DSX1-UP**
**AN ATTACHMENT**

**SMCS-4201, 4202, 4203, 4208, 4209** **i01961945**

| NOTE | PART NUMBER | QTY | PART NAME 1 2 3 4 5 6 (PRODUCT LEVEL) | SEE PAGE |
|---|---|---|---|---|
| Y | *119-7773* | 1 | WHEEL & TIRE GP (REAR) | 273 |
| Y | *201-1874* | 1 | WHEEL & TIRE GP (FRONT) | 277 |

Y-SEPARATE ILLUSTRATION

**<END>**

## *238-6957* WHEEL & TIRE AR—ALL WHEEL DRIVE

**S/N: BXC1-UP; DSX1-UP**
**AN ATTACHMENT**

**SMCS-4201, 4202, 4203, 4208, 4209** **i01961944**

| NOTE | PART NUMBER | QTY | PART NAME 1 2 3 4 5 6 (PRODUCT LEVEL) | SEE PAGE |
|---|---|---|---|---|
| Y | *119-7782* | 1 | WHEEL & TIRE GP (REAR) | 273 |
| Y | *201-1874* | 1 | WHEEL & TIRE GP (FRONT) | 277 |

Y-SEPARATE ILLUSTRATION

**<END>**

## *238-6959* WHEEL & TIRE AR—ALL WHEEL DRIVE

**S/N: BXC1-UP; DSX1-UP**
**AN ATTACHMENT**

**SMCS-4201, 4202, 4203, 4208, 4209** **i01961941**

| NOTE | PART NUMBER | QTY | PART NAME 1 2 3 4 5 6 (PRODUCT LEVEL) | SEE PAGE |
|---|---|---|---|---|
| Y | *216-9117* | 1 | WHEEL & TIRE GP (REAR) | 281 |
| Y | *216-9147* | 1 | WHEEL & TIRE GP (FRONT) | 283 |

Y-SEPARATE ILLUSTRATION

**<END>**

## *238-6960* WHEEL & TIRE AR—ALL WHEEL DRIVE

**S/N: BXC1-UP**
**AN ATTACHMENT**

**SMCS-4201, 4202, 4203, 4208, 4209** **i01961936**

| NOTE | PART NUMBER | QTY | PART NAME 1 2 3 4 5 6 (PRODUCT LEVEL) | SEE PAGE |
|---|---|---|---|---|
| Y | *216-9123* | 1 | WHEEL & TIRE GP (REAR) | 282 |
| Y | *216-9147* | 1 | WHEEL & TIRE GP (FRONT) | 283 |

Y-SEPARATE ILLUSTRATION

**<END>**

# POWER TRAIN

## *238-6963* WHEEL & TIRE AR—ALL WHEEL DRIVE

**S/N: BXC1-UP; DSX1-UP**
**AN ATTACHMENT**

**SMCS-4201, 4202, 4203, 4208, 4209** **i01963723**

| NOTE | PART NUMBER | QTY | PART NAME 1 2 3 4 5 6 (PRODUCT LEVEL) | SEE PAGE |
|---|---|---|---|---|
| Y | *234-2846* | 1 | WHEEL & TIRE GP (FRONT) | 284 |
| Y | *234-2857* | 1 | WHEEL & TIRE GP (REAR) | 286 |

Y-SEPARATE ILLUSTRATION

**<END>**

## *238-6964* WHEEL & TIRE AR—ALL WHEEL DRIVE

**S/N: BXC1-UP; DSX1-UP**
**AN ATTACHMENT**

**SMCS-4201, 4202, 4203, 4208, 4209** **i01963739**

| NOTE | PART NUMBER | QTY | PART NAME 1 2 3 4 5 6 (PRODUCT LEVEL) | SEE PAGE |
|---|---|---|---|---|
| Y | *234-2846* | 1 | WHEEL & TIRE GP (FRONT) | 284 |
| Y | *234-2850* | 1 | WHEEL & TIRE GP (REAR) | 285 |

Y-SEPARATE ILLUSTRATION

**<END>**

## *238-6965* WHEEL & TIRE AR—ALL WHEEL DRIVE

**S/N: BXC1-UP; DSX1-UP**
**AN ATTACHMENT**

**SMCS-4201, 4202, 4203, 4208, 4209** **i01961934**

| NOTE | PART NUMBER | QTY | PART NAME 1 2 3 4 5 6 (PRODUCT LEVEL) | SEE PAGE |
|---|---|---|---|---|
| Y | *119-7782* | 1 | WHEEL & TIRE GP (REAR) | 273 |
| Y | *201-1962* | 1 | WHEEL & TIRE GP (FRONT) | 280 |

Y-SEPARATE ILLUSTRATION

**<END>**

## *238-6966* WHEEL & TIRE AR—ALL WHEEL DRIVE

**S/N: BXC1-UP; DSX1-UP**
**AN ATTACHMENT**

**SMCS-4201, 4202, 4203, 4208, 4209** **i01961960**

| NOTE | PART NUMBER | QTY | PART NAME 1 2 3 4 5 6 (PRODUCT LEVEL) | SEE PAGE |
|---|---|---|---|---|
| Y | *238-9672* | 1 | WHEEL & TIRE AR (REAR) | 271 |
| Y | *201-1962* | 1 | WHEEL & TIRE GP (FRONT) | 280 |

Y-SEPARATE ILLUSTRATION

**<END>**

## *238-6967* WHEEL & TIRE AR—ALL WHEEL DRIVE

**S/N: BXC1-UP; DSX1-UP**
**AN ATTACHMENT**

**SMCS-4201, 4202, 4203, 4208, 4209** **i01961961**

| NOTE | PART NUMBER | QTY | PART NAME 1 2 3 4 5 6 (PRODUCT LEVEL) | SEE PAGE |
|---|---|---|---|---|
| Y | *195-6332* | 1 | WHEEL & TIRE AR (REAR) | 267 |
| Y | *201-1868* | 1 | WHEEL & TIRE GP (FRONT) | 276 |

Y-SEPARATE ILLUSTRATION

**<END>**

## *238-6970* WHEEL & TIRE AR—ALL WHEEL DRIVE

**S/N: BXC1-UP; DSX1-UP**
**AN ATTACHMENT**

**SMCS-4201, 4202, 4203, 4208, 4209** **i01961965**

| NOTE | PART NUMBER | QTY | PART NAME 1 2 3 4 5 6 (PRODUCT LEVEL) | SEE PAGE |
|---|---|---|---|---|
| Y | *238-9675* | 1 | WHEEL & TIRE AR (REAR) | 271 |
| Y | *201-1949* | 1 | WHEEL & TIRE GP (FRONT) | 278 |

Y-SEPARATE ILLUSTRATION

**<END>**

## *238-6971* WHEEL & TIRE AR—ALL WHEEL DRIVE

**S/N: BXC1-UP; DSX1-UP**
**AN ATTACHMENT**

**SMCS-4201, 4202, 4203, 4208, 4209** **i01961966**

| NOTE | PART NUMBER | QTY | PART NAME 1 2 3 4 5 6 (PRODUCT LEVEL) | SEE PAGE |
|---|---|---|---|---|
| Y | *238-9678* | 1 | WHEEL & TIRE AR (REAR) | 272 |
| Y | *201-1949* | 1 | WHEEL & TIRE GP (FRONT) | 278 |

Y-SEPARATE ILLUSTRATION

**<END>**

## *238-6973* WHEEL & TIRE AR—ALL WHEEL DRIVE

**S/N: BXC1-UP; DSX1-UP**
**AN ATTACHMENT**

**SMCS-4201, 4202, 4203, 4208, 4209** **i01961968**

| NOTE | PART NUMBER | QTY | PART NAME 1 2 3 4 5 6 (PRODUCT LEVEL) | SEE PAGE |
|---|---|---|---|---|
| Y | *238-9675* | 1 | WHEEL & TIRE AR (REAR) | 271 |
| Y | *201-1955* | 1 | WHEEL & TIRE GP (FRONT) | 278 |

Y-SEPARATE ILLUSTRATION

**<END>**

# POWER TRAIN

## *238-6974* WHEEL & TIRE AR—ALL WHEEL DRIVE

**S/N: BXC1-UP; DSX1-UP**
**AN ATTACHMENT**

**SMCS-4201, 4202, 4203, 4208, 4209** **i01961969**

| NOTE | PART NUMBER | QTY | PART NAME 1 2 3 4 5 6 (PRODUCT LEVEL) | SEE PAGE |
|---|---|---|---|---|
| Y | *238-9678* | 1 | WHEEL & TIRE AR (REAR) | 272 |
| Y | *201-1955* | 1 | WHEEL & TIRE GP (FRONT) | 278 |

Y-SEPARATE ILLUSTRATION

**<END>**

## *238-9672* WHEEL & TIRE AR—REAR

**S/N: BXC1-UP; DSX1-UP**
**PART OF 238-6966 WHEEL & TIRE AR**
**AN ATTACHMENT**

**SMCS-4201, 4202, 4203, 4208, 4209** **i01946202**

| NOTE | PART NUMBER | QTY | PART NAME 1 2 3 4 5 6 (PRODUCT LEVEL) | SEE PAGE |
|---|---|---|---|---|
| Y | *238-9673* | 1 | WHEEL & TIRE GP (LH) | 287 |
| Y | *238-9674* | 1 | WHEEL & TIRE GP (RH) | 287 |
| | | | | |
| | **141-7221** | 16 | NUT-HEX FLANGE (3/4-16 THD) | |

Y-SEPARATE ILLUSTRATION

**<END>**

## *238-9675* WHEEL & TIRE AR—REAR

**S/N: BXC1-UP; DSX1-UP**
**PART OF 238-6970, 238-6973 WHEEL & TIRE AR**
**AN ATTACHMENT**

**SMCS-4201, 4202, 4203, 4208, 4209** **i01946203**

| NOTE | PART NUMBER | QTY | PART NAME 1 2 3 4 5 6 (PRODUCT LEVEL) | SEE PAGE |
|---|---|---|---|---|
| Y | *238-9676* | 1 | WHEEL & TIRE GP (LH) | 287 |
| Y | *238-9677* | 1 | WHEEL & TIRE GP (RH) | 288 |
| | | | | |
| | **141-7221** | 16 | NUT-HEX FLANGE (3/4-16 THD) | |

Y-SEPARATE ILLUSTRATION

**<END>**

## *238-9678* WHEEL & TIRE AR–REAR

**S/N: BXC1-UP; DSX1-UP**
**PART OF 238-6971, 238-6974 WHEEL & TIRE AR**
**AN ATTACHMENT**

**SMCS-4201, 4202, 4203, 4208, 4209** **i01946204**

| NOTE | PART NUMBER | QTY | PART NAME 1 2 3 4 5 6 (PRODUCT LEVEL) | SEE PAGE |
|---|---|---|---|---|
| Y | *238-9679* | 1 | WHEEL & TIRE GP (LH) | 288 |
| Y | *238-9680* | 1 | WHEEL & TIRE GP (RH) | 288 |
| | | | | |
| | **141-7221** | 16 | NUT-HEX FLANGE (3/4-16 THD) | |

Y-SEPARATE ILLUSTRATION

**<END>**

## *119-7771* WHEEL & TIRE GP–LH

**S/N: BXC1-UP; DSX1-UP**
**PART OF 119-7773 WHEEL & TIRE GP**
**AN ATTACHMENT**

**SMCS-4201, 4202, 4203, 4208, 4209** **i01968131**

| NOTE | PART NUMBER | QTY | PART NAME 1 2 3 4 5 6 (PRODUCT LEVEL) | SEE PAGE |
|---|---|---|---|---|
| C | *146-8319* | 1 | TIRE (16.9 X 28-12PLY) | |
| Y | **6D-0337** | 1 | VALVE GP-TIRE | 266 |
| | **119-7776** | 1 | WHEEL AS (REAR) | |

C-CHANGE FROM PREVIOUS TYPE
Y-SEPARATE ILLUSTRATION

**<END>**

## *119-7772* WHEEL & TIRE GP–RH

**S/N: BXC1-UP; DSX1-UP**
**PART OF 119-7773 WHEEL & TIRE GP**
**AN ATTACHMENT**

**SMCS-4201, 4202, 4203, 4208, 4209** **i01969158**

| NOTE | PART NUMBER | QTY | PART NAME 1 2 3 4 5 6 (PRODUCT LEVEL) | SEE PAGE |
|---|---|---|---|---|
| | *146-8319* | 1 | TIRE (16.9 X 28-12PLY) | |
| Y | **6D-0337** | 1 | VALVE GP-TIRE | 266 |
| | **119-7776** | 1 | WHEEL AS (REAR) | |

Y-SEPARATE ILLUSTRATION

**<END>**

## *119-7773* WHEEL & TIRE GP—REAR

**S/N: BXC1-UP; DSX1-UP**
**PART OF 238-6956 WHEEL & TIRE AR**
**AN ATTACHMENT**

**SMCS-4201, 4202, 4203, 4208, 4209** **i01778131**

| NOTE | PART NUMBER | QTY | PART NAME 1 2 3 4 5 6 (PRODUCT LEVEL) | SEE PAGE |
|---|---|---|---|---|
| | **141-7221** | 16 | NUT-HEX FLANGE (3/4-16) | |
| Y | *119-7771* | 1 | WHEEL & TIRE GP (LH) | 272 |
| Y | *119-7772* | 1 | WHEEL & TIRE GP (RH) | 272 |

Y-SEPARATE ILLUSTRATION

**<END>**

## *119-7782* WHEEL & TIRE GP—REAR

**S/N: BXC1-UP; DSX1-UP**
**PART OF 238-6957, 238-6965 WHEEL & TIRE AR**
**AN ATTACHMENT**

**SMCS-4201, 4202, 4203, 4208, 4209** **i01778133**

| NOTE | PART NUMBER | QTY | PART NAME 1 2 3 4 5 6 (PRODUCT LEVEL) | SEE PAGE |
|---|---|---|---|---|
| | **141-7221** | 1 | NUT-HEX FLANGE (3/4-16) | |
| Y | *119-7783* | 1 | WHEEL & TIRE GP (LH) | 273 |
| Y | *119-7784* | 1 | WHEEL & TIRE GP (RH) | 274 |

Y-SEPARATE ILLUSTRATION

**<END>**

## *119-7783* WHEEL & TIRE GP—LH

**S/N: BXC1-UP; DSX1-UP**
**PART OF 119-7782 WHEEL & TIRE GP**
**AN ATTACHMENT**

**SMCS-4201, 4202, 4203, 4208, 4209** **i01778135**

| NOTE | PART NUMBER | QTY | PART NAME 1 2 3 4 5 6 (PRODUCT LEVEL) | SEE PAGE |
|---|---|---|---|---|
| | *135-5893* | 1 | TIRE (18.4/15X26) | |
| Y | **6D-0337** | 1 | VALVE GP-TIRE | 266 |
| | **119-7785** | 1 | WHEEL AS-REAR | |

Y-SEPARATE ILLUSTRATION

**<END>**

## *119-7784* WHEEL & TIRE GP–RH

**S/N: BXC1-UP; DSX1-UP**
**PART OF 119-7782 WHEEL & TIRE GP**
**AN ATTACHMENT**

**SMCS-4201, 4202, 4203, 4208, 4209** **i01778139**

| NOTE | PART NUMBER | QTY | PART NAME 1 2 3 4 5 6 (PRODUCT LEVEL) | SEE PAGE |
|---|---|---|---|---|
| | *135-5893* | 1 | TIRE (18.4X15-26PLY) | |
| Y | **6D-0337** | 1 | VALVE GP-TIRE | 266 |
| | **119-7785** | 1 | WHEEL AS-REAR | |

Y-SEPARATE ILLUSTRATION

**<END>**

## *178-7227* WHEEL & TIRE GP–REAR

**S/N: BXC1-UP; DSX1-UP**
**PART OF 238-6955 WHEEL & TIRE AR**
**FOR USE WITH FOUR WHEEL DRIVE**
**AN ATTACHMENT**

**SMCS-4201, 4202, 4203, 4208, 4209** **i01776160**

| NOTE | PART NUMBER | QTY | PART NAME 1 2 3 4 5 6 (PRODUCT LEVEL) | SEE PAGE |
|---|---|---|---|---|
| | **141-7221** | 16 | NUT-HEX FLANGE (3/4-16) | |
| Y | *178-7228* | 1 | WHEEL & TIRE GP (LH) | 274 |
| Y | *178-7229* | 1 | WHEEL & TIRE GP (RH) | 275 |

Y-SEPARATE ILLUSTRATION

**<END>**

## *178-7228* WHEEL & TIRE GP–LH

**S/N: BXC1-UP; DSX1-UP**
**PART OF 178-7227 WHEEL & TIRE GP**
**AN ATTACHMENT**

**SMCS-4201, 4202, 4203, 4208, 4209** **i01776403**

| NOTE | PART NUMBER | QTY | PART NAME 1 2 3 4 5 6 (PRODUCT LEVEL) | SEE PAGE |
|---|---|---|---|---|
| | *178-7230* | 1 | TIRE (16.9X28-12PLY) | |
| | **119-7776** | 1 | WHEEL AS (REAR) | |
| Y | **6D-0337** | 1 | VALVE GP-TIRE | 266 |

Y-SEPARATE ILLUSTRATION

**<END>**

## *178-7229* WHEEL & TIRE GP–RH

**S/N: BXC1-UP; DSX1-UP**
**PART OF 178-7227 WHEEL & TIRE GP**
**AN ATTACHMENT**

**SMCS-4201, 4202, 4203, 4208, 4209** **i01776450**

| NOTE | PART NUMBER | QTY | PART NAME 1 2 3 4 5 6 (PRODUCT LEVEL) | SEE PAGE |
|---|---|---|---|---|
| | *178-7230* | 1 | TIRE (16.9X28-12PLY) | |
| | **119-7776** | 1 | WHEEL AS (REAR) | |
| Y | **6D-0337** | 1 | VALVE GP-TIRE | 266 |
| Y-SEPARATE ILLUSTRATION | | | | |

**<END>**

## *195-6330* WHEEL & TIRE GP–RH

**S/N: BXC1-UP; DSX1-UP**
**PART OF 195-6332 WHEEL & TIRE AR**
**AN ATTACHMENT**

**SMCS-4201, 4202, 4203, 4208, 4209** **i01964064**

| NOTE | PART NUMBER | QTY | PART NAME 1 2 3 4 5 6 (PRODUCT LEVEL) | SEE PAGE |
|---|---|---|---|---|
| | *195-6329* | 1 | TIRE (440/80R28) | |
| Y | **6D-0337** | 1 | VALVE GP-TIRE | 266 |
| | **119-7776** | 1 | WHEEL AS (REAR) | |
| Y-SEPARATE ILLUSTRATION | | | | |

**<END>**

## *195-6331* WHEEL & TIRE GP–LH

**S/N: BXC1-UP; DSX1-UP**
**PART OF 195-6332 WHEEL & TIRE AR**
**AN ATTACHMENT**

**SMCS-4201, 4202, 4203, 4208, 4209** **i01964152**

| NOTE | PART NUMBER | QTY | PART NAME 1 2 3 4 5 6 (PRODUCT LEVEL) | SEE PAGE |
|---|---|---|---|---|
| | *195-6329* | 1 | TIRE (440/80R28) | |
| Y | **6D-0337** | 1 | VALVE GP-TIRE | 266 |
| | **119-7776** | 1 | WHEEL AS (REAR) | |
| Y-SEPARATE ILLUSTRATION | | | | |

**<END>**

## *201-1868* WHEEL & TIRE GP—FRONT

**S/N: BXC1-UP; DSX1-UP**
**PART OF 238-6967 WHEEL & TIRE AR**
**AN ATTACHMENT**

**SMCS-4201, 4202, 4203, 4208, 4209** **i01962234**

| NOTE | PART NUMBER | QTY | PART NAME 1 2 3 4 5 6 (PRODUCT LEVEL) | SEE PAGE |
|---|---|---|---|---|
| | *201-1915* | 1 | MOUNTING GP-WHEEL (FRONT) | |
| M | **178-1304** | 8 | NUT-HEX FLANGE (M20X1.5 THD) | |
| | **8T-5439** | 8 | WASHER (21.5X45X6MM THK) | |
| Y | *201-1869* | 1 | WHEEL & TIRE GP (LH) | 276 |
| Y | *201-1870* | 1 | WHEEL & TIRE GP (RH) | 276 |

M-METRIC PART
Y-SEPARATE ILLUSTRATION

**<END>**

## *201-1869* WHEEL & TIRE GP—FRONT

**S/N: BXC1-UP; DSX1-UP**
**PART OF 201-1868 WHEEL & TIRE GP**
**AN ATTACHMENT**

**SMCS-4201, 4202, 4203, 4208, 4209** **i01962587**

| NOTE | PART NUMBER | QTY | PART NAME 1 2 3 4 5 6 (PRODUCT LEVEL) | SEE PAGE |
|---|---|---|---|---|
| | *194-0832* | 1 | TIRE (340/80R18) | |
| Y | *201-1920* | 1 | VALVE GP-TIRE | 267 |
| | **202-6186** | 1 | WHEEL AS (FRONT) | |

Y-SEPARATE ILLUSTRATION

**<END>**

## *201-1870* WHEEL & TIRE GP—FRONT

**S/N: BXC1-UP; DSX1-UP**
**PART OF 201-1868 WHEEL & TIRE GP**
**AN ATTACHMENT**

**SMCS-4201, 4202, 4203, 4208, 4209** **i01962262**

| NOTE | PART NUMBER | QTY | PART NAME 1 2 3 4 5 6 (PRODUCT LEVEL) | SEE PAGE |
|---|---|---|---|---|
| | *194-0832* | 1 | TIRE (340/80R18) | |
| Y | *201-1920* | 1 | VALVE GP-TIRE | 267 |
| | **202-6186** | 1 | WHEEL AS (FRONT) | |

Y-SEPARATE ILLUSTRATION

**<END>**

# POWER TRAIN

## *201-1874* WHEEL & TIRE GP—FRONT

**S/N: BXC1-UP; DSX1-UP**
**PART OF 238-6955, 238-6956, 238-6957 WHEEL & TIRE AR**
**AN ATTACHMENT**

**SMCS-4201, 4202, 4203, 4208, 4209** **i01551481**

| NOTE | PART NUMBER | QTY | PART NAME 1 2 3 4 5 6 (PRODUCT LEVEL) | SEE PAGE |
|---|---|---|---|---|
| Y | *201-1875* | 1 | WHEEL & TIRE GP | 277 |
| Y | *201-1876* | 1 | WHEEL & TIRE GP | 277 |
| | *201-1915* | 1 | MOUNTING GP-WHEEL | |
| | **8T-5439** | 8 | WASHER (21.5X45X6MM THK) | |
| M | **178-1304** | 8 | NUT-HEX FLANGE | |

M-METRIC PART
Y-SEPARATE ILLUSTRATION

**<END>**

## *201-1875* WHEEL & TIRE GP

**S/N: BXC1-UP; DSX1-UP**
**PART OF 201-1874 WHEEL & TIRE GP**
**AN ATTACHMENT**

**SMCS-4201, 4202, 4203, 4208, 4209** **i02007685**

| NOTE | PART NUMBER | QTY | PART NAME 1 2 3 4 5 6 (PRODUCT LEVEL) | SEE PAGE |
|---|---|---|---|---|
| | *9R-6481* | 1 | TIRE (12.5X18-10PLY) | |
| Y | *201-1920* | 1 | VALVE GP-TIRE | 267 |
| | **195-6339** | 1 | WHEEL AS (FRONT) | |

Y-SEPARATE ILLUSTRATION

**<END>**

## *201-1876* WHEEL & TIRE GP

**S/N: BXC1-UP; DSX1-UP**
**PART OF 201-1874 WHEEL & TIRE GP**
**AN ATTACHMENT**

**SMCS-4201, 4202, 4203, 4208, 4209** **i02007687**

| NOTE | PART NUMBER | QTY | PART NAME 1 2 3 4 5 6 (PRODUCT LEVEL) | SEE PAGE |
|---|---|---|---|---|
| | *9R-6481* | 1 | TIRE (12.5X18-10PLY) | |
| Y | *201-1920* | 1 | VALVE GP-TIRE | 267 |
| | **195-6339** | 1 | WHEEL AS (FRONT) | |

Y-SEPARATE ILLUSTRATION

**<END>**

## *201-1949* WHEEL & TIRE GP—FRONT

**S/N: BXC1-UP; DSX1-UP**
**PART OF 238-6970, 238-6971 WHEEL & TIRE AR**
**AN ATTACHMENT**

**SMCS-4201, 4202, 4203, 4208, 4209** **i01962596**

| NOTE | PART NUMBER | QTY | PART NAME 1 2 3 4 5 6 (PRODUCT LEVEL) | SEE PAGE |
|---|---|---|---|---|
| | *201-1915* | 1 | MOUNTING GP-WHEEL (FRONT) | |
| | **8T-5439** | 16 | WASHER (21.5X45X6MM THK) | |
| | **201-1919** | 16 | NUT (M20X1.5 THD) | |
| Y | *201-1960* | 1 | WHEEL & TIRE GP (LH) | 279 |
| Y | *201-1961* | 1 | WHEEL & TIRE GP (RH) | 279 |

Y-SEPARATE ILLUSTRATION

**<END>**

## *201-1955* WHEEL & TIRE GP—FRONT

**S/N: BXC1-UP; DSX1-UP**
**PART OF 238-6973, 238-6974 WHEEL & TIRE AR**
**AN ATTACHMENT**

**SMCS-4201, 4202, 4203, 4208, 4209** **i01962598**

| NOTE | PART NUMBER | QTY | PART NAME 1 2 3 4 5 6 (PRODUCT LEVEL) | SEE PAGE |
|---|---|---|---|---|
| | *201-1915* | 1 | MOUNTING GP-WHEEL (FRONT) | |
| | **8T-5439** | 16 | WASHER (21.5X45X6MM THK) | |
| | **201-1919** | 16 | NUT (M20X1.5 THD) | |
| Y | *201-1956* | 1 | WHEEL & TIRE GP (LH) | 278 |
| Y | *201-1957* | 1 | WHEEL & TIRE GP (RH) | 279 |

Y-SEPARATE ILLUSTRATION

**<END>**

## *201-1956* WHEEL & TIRE GP—LH

**S/N: BXC1-UP; DSX1-UP**
**PART OF 201-1955 WHEEL & TIRE GP**
**AN ATTACHMENT**

**SMCS-4201, 4202, 4203, 4208, 4209** **i01962520**

| NOTE | PART NUMBER | QTY | PART NAME 1 2 3 4 5 6 (PRODUCT LEVEL) | SEE PAGE |
|---|---|---|---|---|
| | *187-6075* | 1 | TIRE (335/80R18) | |
| Y | *201-1920* | 1 | VALVE GP-TIRE | 267 |
| | **202-6186** | 1 | WHEEL AS (FRONT) | |

Y-SEPARATE ILLUSTRATION

**<END>**

## *201-1957* WHEEL & TIRE GP–RH

**S/N: BXC1-UP; DSX1-UP**
**PART OF 201-1955 WHEEL & TIRE GP**
**AN ATTACHMENT**

**SMCS-4201, 4202, 4203, 4208, 4209** **i01962541**

| NOTE | PART NUMBER | QTY | PART NAME 1 2 3 4 5 6 (PRODUCT LEVEL) | SEE PAGE |
|---|---|---|---|---|
| | *187-6075* | 1 | TIRE (335/80R18) | |
| Y | *201-1920* | 1 | VALVE GP-TIRE | 267 |
| | **202-6186** | 1 | WHEEL AS (FRONT) | |

Y-SEPARATE ILLUSTRATION

**<END>**

## *201-1960* WHEEL & TIRE GP–LH

**S/N: BXC1-UP; DSX1-UP**
**PART OF 201-1949 WHEEL & TIRE GP**
**AN ATTACHMENT**

**SMCS-4201, 4202, 4203, 4208, 4209** **i01962565**

| NOTE | PART NUMBER | QTY | PART NAME 1 2 3 4 5 6 (PRODUCT LEVEL) | SEE PAGE |
|---|---|---|---|---|
| | *201-1879* | 1 | TIRE (12.5/80R18 R4) | |
| Y | *201-1920* | 1 | VALVE GP-TIRE | 267 |
| | **202-6186** | 1 | WHEEL AS (FRONT) | |

Y-SEPARATE ILLUSTRATION

**<END>**

## *201-1961* WHEEL & TIRE GP–RH

**S/N: BXC1-UP; DSX1-UP**
**PART OF 201-1949 WHEEL & TIRE GP**
**AN ATTACHMENT**

**SMCS-4201, 4202, 4203, 4208, 4209** **i01962570**

| NOTE | PART NUMBER | QTY | PART NAME 1 2 3 4 5 6 (PRODUCT LEVEL) | SEE PAGE |
|---|---|---|---|---|
| | *201-1879* | 1 | TIRE (12.5/80R18 R4) | |
| Y | *201-1920* | 1 | VALVE GP-TIRE | 267 |
| | **202-6186** | 1 | WHEEL AS (FRONT) | |

Y-SEPARATE ILLUSTRATION

**<END>**

## *201-1962* WHEEL & TIRE GP—FRONT

**S/N: BXC1-UP; DSX1-UP**
**PART OF 238-6965, 238-6966 WHEEL & TIRE AR**
**AN ATTACHMENT**

**SMCS-4201, 4202, 4203, 4208, 4209** **i02007689**

| NOTE | PART NUMBER | QTY | PART NAME 1 2 3 4 5 6 (PRODUCT LEVEL) | SEE PAGE |
|---|---|---|---|---|
| | *201-1915* | 1 | MOUNTING GP-WHEEL (FRONT) | |
| | **8T-5439** | 16 | WASHER (21.5X45X6MM THK) | |
| | **201-1919** | 16 | NUT (M20X1.5 THD) | |
| Y | *201-1963* | 1 | WHEEL & TIRE GP (LH) | 280 |
| Y | *201-1964* | 1 | WHEEL & TIRE GP (RH) | 280 |

Y-SEPARATE ILLUSTRATION

**<END>**

## *201-1963* WHEEL & TIRE GP—LH

**S/N: BXC1-UP; DSX1-UP**
**PART OF 201-1962 WHEEL & TIRE GP**
**AN ATTACHMENT**

**SMCS-4201, 4202, 4203, 4208, 4209** **i01962575**

| NOTE | PART NUMBER | QTY | PART NAME 1 2 3 4 5 6 (PRODUCT LEVEL) | SEE PAGE |
|---|---|---|---|---|
| | *201-1929* | 1 | TIRE (340/80R18) | |
| Y | *201-1920* | 1 | VALVE GP-TIRE | 267 |
| | **202-6186** | 1 | WHEEL AS (FRONT) | |

Y-SEPARATE ILLUSTRATION

**<END>**

## *201-1964* WHEEL & TIRE GP—RH

**S/N: BXC1-UP; DSX1-UP**
**PART OF 201-1962 WHEEL & TIRE GP**
**AN ATTACHMENT**

**SMCS-4201, 4202, 4203, 4208, 4209** **i02007691**

| NOTE | PART NUMBER | QTY | PART NAME 1 2 3 4 5 6 (PRODUCT LEVEL) | SEE PAGE |
|---|---|---|---|---|
| | *201-1929* | 1 | TIRE (340/80R18) | |
| Y | *201-1920* | 1 | VALVE GP-TIRE | 267 |
| | **195-6339** | 1 | WHEEL AS (FRONT) | |

Y-SEPARATE ILLUSTRATION

**<END>**

## *216-9117* WHEEL & TIRE GP–REAR

**S/N: BXC1-UP; DSX1-UP**
**TWO WHEEL STEER**
**PART OF 238-6959 WHEEL & TIRE AR**
**AN ATTACHMENT**

**SMCS-4201, 4202, 4203, 4208, 4209** **i01938150**

| NOTE | PART NUMBER | QTY | PART NAME 1 2 3 4 5 6 (PRODUCT LEVEL) | SEE PAGE |
|---|---|---|---|---|
| Y | *216-9118* | 1 | WHEEL & TIRE GP (LH) | 281 |
| Y | *216-9119* | 1 | WHEEL & TIRE GP (RH) | 281 |
| | **141-7221** | 16 | NUT-HEX FLANGE (3/4-16 THD) | |
| Y-SEPARATE ILLUSTRATION | | | | |

**<END>**

## *216-9118* WHEEL & TIRE GP–LH

**S/N: BXC1-UP; DSX1-UP**
**PART OF 216-9117 WHEEL & TIRE GP**
**AN ATTACHMENT**

**SMCS-4201, 4202, 4203, 4208, 4209** **i01938153**

| NOTE | PART NUMBER | QTY | PART NAME 1 2 3 4 5 6 (PRODUCT LEVEL) | SEE PAGE |
|---|---|---|---|---|
| | *216-9112* | 1 | TIRE (18.4-26) | |
| Y | **6D-0337** | 1 | VALVE GP-TIRE | 266 |
| | **119-7785** | 1 | WHEEL AS (REAR) | |
| Y-SEPARATE ILLUSTRATION | | | | |

**<END>**

## *216-9119* WHEEL & TIRE GP–RH

**S/N: BXC1-UP; DSX1-UP**
**PART OF 216-9117 WHEEL & TIRE GP**
**AN ATTACHMENT**

**SMCS-4201, 4202, 4203, 4208, 4209** **i01938149**

| NOTE | PART NUMBER | QTY | PART NAME 1 2 3 4 5 6 (PRODUCT LEVEL) | SEE PAGE |
|---|---|---|---|---|
| | *216-9112* | 1 | TIRE (18.4-26) | |
| Y | **6D-0337** | 1 | VALVE GP-TIRE | 266 |
| | *119-7785* | 1 | WHEEL AS (REAR) | |
| Y-SEPARATE ILLUSTRATION | | | | |

**<END>**

## *216-9123* WHEEL & TIRE GP–REAR

**S/N: BXC1-UP**
**TWO WHEEL STEER**
**PART OF 238-6960 WHEEL & TIRE AR**
**AN ATTACHMENT**

**SMCS-4201, 4202, 4203, 4208, 4209** **i01938154**

| NOTE | PART NUMBER | QTY | PART NAME 1 2 3 4 5 6 (PRODUCT LEVEL) | SEE PAGE |
|---|---|---|---|---|
| Y | *216-9124* | 1 | WHEEL & TIRE GP (LH) | 282 |
| Y | *216-9125* | 1 | WHEEL & TIRE GP (RH) | 282 |
| | **141-7221** | 16 | NUT-HEX FLANGE (3/4-16 THD) | |

Y-SEPARATE ILLUSTRATION

**<END>**

## *216-9124* WHEEL & TIRE GP–LH

**S/N: BXC1-UP**
**PART OF 216-9123 WHEEL & TIRE GP**
**AN ATTACHMENT**

**SMCS-4201, 4202, 4203, 4208, 4209** **i01938148**

| NOTE | PART NUMBER | QTY | PART NAME 1 2 3 4 5 6 (PRODUCT LEVEL) | SEE PAGE |
|---|---|---|---|---|
| | *216-9113* | 1 | TIRE (16.9-28) | |
| Y | **6D-0337** | 1 | VALVE GP-TIRE | 266 |
| | **119-7776** | 1 | WHEEL AS (REAR) | |

Y-SEPARATE ILLUSTRATION

**<END>**

## *216-9125* WHEEL & TIRE GP–RH

**S/N: BXC1-UP**
**PART OF 216-9123 WHEEL & TIRE GP**
**AN ATTACHMENT**

**SMCS-4201, 4202, 4203, 4208, 4209** **i01938147**

| NOTE | PART NUMBER | QTY | PART NAME 1 2 3 4 5 6 (PRODUCT LEVEL) | SEE PAGE |
|---|---|---|---|---|
| | *216-9113* | 1 | TIRE (16.9-28) | |
| Y | **6D-0337** | 1 | VALVE GP-TIRE | 266 |
| | **119-7776** | 1 | WHEEL AS (REAR) | |

Y-SEPARATE ILLUSTRATION

**<END>**

# POWER TRAIN

## *216-9147* WHEEL & TIRE GP–FRONT

**S/N: BXC1-UP; DSX1-UP**
**PART OF 238-6959, 238-6960 WHEEL & TIRE AR**
**AN ATTACHMENT**

**SMCS-4201, 4202, 4203, 4208, 4209** **i02007694**

| NOTE | PART NUMBER | QTY | PART NAME 1 2 3 4 5 6 (PRODUCT LEVEL) | SEE PAGE |
|---|---|---|---|---|
| | *201-1915* | 1 | MOUNTING GP-WHEEL (FRONT) | |
| | **8T-5439** | 16 | WASHER (21.5X45X6MM THK) | |
| | **201-1919** | 16 | NUT (M20X1.5 THD) | |
| Y | *216-9148* | 1 | WHEEL & TIRE GP (LH) | 283 |
| Y | *216-9149* | 1 | WHEEL & TIRE GP (RH) | 283 |

Y-SEPARATE ILLUSTRATION

**<END>**

## *216-9148* WHEEL & TIRE GP–LH

**S/N: BXC1-UP; DSX1-UP**
**PART OF 216-9147 WHEEL & TIRE GP**
**AN ATTACHMENT**

**SMCS-4201, 4202, 4203, 4208, 4209** **i01962597**

| NOTE | PART NUMBER | QTY | PART NAME 1 2 3 4 5 6 (PRODUCT LEVEL) | SEE PAGE |
|---|---|---|---|---|
| | **216-9111** | 1 | TIRE (12.5/80-18 10PLY) | |
| Y | *201-1920* | 1 | VALVE GP-TIRE | 267 |
| | **202-6186** | 1 | WHEEL AS (FRONT) | |

Y-SEPARATE ILLUSTRATION

**<END>**

## *216-9149* WHEEL & TIRE GP–RH

**S/N: BXC1-UP; DSX1-UP**
**PART OF 216-9147 WHEEL & TIRE GP**
**AN ATTACHMENT**

**SMCS-4201, 4202, 4203, 4208, 4209** **i01962048**

| NOTE | PART NUMBER | QTY | PART NAME 1 2 3 4 5 6 (PRODUCT LEVEL) | SEE PAGE |
|---|---|---|---|---|
| | **216-9111** | 1 | TIRE (12.5/80-18 10PLY) | |
| Y | *201-1920* | 1 | VALVE GP-TIRE | 267 |
| | **202-6186** | 1 | WHEEL AS (FRONT) | |

Y-SEPARATE ILLUSTRATION

**<END>**

## *234-2846* WHEEL & TIRE GP—FRONT

**S/N: BXC1-UP; DSX1-UP**
**PART OF 238-6963, 238-6964 WHEEL & TIRE AR**
**AN ATTACHMENT**

**SMCS-4201, 4202, 4203, 4208, 4209** **i02007700**

| NOTE | PART NUMBER | QTY | PART NAME 1 2 3 4 5 6 (PRODUCT LEVEL) | SEE PAGE |
|---|---|---|---|---|
| | *201-1915* | 1 | MOUNTING GP-WHEEL (FRONT) | |
| | **8T-5439** | 16 | WASHER (21.5X45X6MM THK) | |
| | **201-1919** | 16 | NUT (M20X1.5 THD) | |
| Y | **234-2847** | 1 | WHEEL & TIRE GP (LH) | 284 |
| Y | **234-2848** | 1 | WHEEL & TIRE GP (RH) | 284 |

Y-SEPARATE ILLUSTRATION

**<END>**

## *234-2847* WHEEL & TIRE GP—LH

**S/N: BXC1-UP; DSX1-UP**
**PART OF 234-2846 WHEEL & TIRE GP**
**AN ATTACHMENT**

**SMCS-4201, 4202, 4203, 4208, 4209** **i02007707**

| NOTE | PART NUMBER | QTY | PART NAME 1 2 3 4 5 6 (PRODUCT LEVEL) | SEE PAGE |
|---|---|---|---|---|
| | **234-2842** | 1 | TIRE (12.5/80-18) | |
| Y | *201-1920* | 1 | VALVE GP-TIRE | 267 |
| | **202-6186** | 1 | WHEEL AS (FRONT) | |

Y-SEPARATE ILLUSTRATION

**<END>**

## *234-2848* WHEEL & TIRE GP—RH

**S/N: BXC1-UP; DSX1-UP**
**PART OF 234-2846 WHEEL & TIRE GP**
**AN ATTACHMENT**

**SMCS-4201, 4202, 4203, 4208, 4209** **i02007708**

| NOTE | PART NUMBER | QTY | PART NAME 1 2 3 4 5 6 (PRODUCT LEVEL) | SEE PAGE |
|---|---|---|---|---|
| | **234-2842** | 1 | TIRE (12.5/80-18) | |
| Y | *201-1920* | 1 | VALVE GP-TIRE | 267 |
| | **202-6186** | 1 | WHEEL AS (FRONT) | |

Y-SEPARATE ILLUSTRATION

**<END>**

## *234-2850* WHEEL & TIRE GP—REAR

**S/N: BXC1-UP; DSX1-UP**
**PART OF 238-6964 WHEEL & TIRE AR**
**AN ATTACHMENT**

**SMCS-4201, 4202, 4203, 4208, 4209** **i01935955**

| NOTE | PART NUMBER | QTY | PART NAME 1 2 3 4 5 6 (PRODUCT LEVEL) | SEE PAGE |
|---|---|---|---|---|
| | **141-7221** | 16 | NUT-HEX FLANGE (3/4-16 THD) | |
| Y | *234-2851* | 1 | WHEEL & TIRE GP (LH) | 285 |
| Y | *234-2852* | 1 | WHEEL & TIRE GP (RH) | 285 |

Y-SEPARATE ILLUSTRATION

**<END>**

## *234-2851* WHEEL & TIRE GP—LH

**S/N: BXC1-UP; DSX1-UP**
**PART OF 234-2850 WHEEL & TIRE GP**
**AN ATTACHMENT**

**SMCS-4201, 4202, 4203, 4208, 4209** **i01935957**

| NOTE | PART NUMBER | QTY | PART NAME 1 2 3 4 5 6 (PRODUCT LEVEL) | SEE PAGE |
|---|---|---|---|---|
| | *234-2849* | 1 | TIRE (16.9-28 TI-06 12PLY) | |
| Y | **6D-0337** | 1 | VALVE GP-TIRE | 266 |
| | **119-7776** | 1 | WHEEL AS (REAR) | |

Y-SEPARATE ILLUSTRATION

**<END>**

## *234-2852* WHEEL & TIRE GP—RH

**S/N: BXC1-UP; DSX1-UP**
**PART OF 234-2850 WHEEL & TIRE GP**
**AN ATTACHMENT**

**SMCS-4201, 4202, 4203, 4208, 4209** **i01935959**

| NOTE | PART NUMBER | QTY | PART NAME 1 2 3 4 5 6 (PRODUCT LEVEL) | SEE PAGE |
|---|---|---|---|---|
| | *234-2849* | 1 | TIRE (16.9-28 TI-06 12PLY) | |
| Y | **6D-0337** | 1 | VALVE GP-TIRE | 266 |
| | **119-7776** | 1 | WHEEL AS (REAR) | |

Y-SEPARATE ILLUSTRATION

**<END>**

## *234-2857* WHEEL & TIRE GP–REAR

**S/N: BXC1-UP; DSX1-UP**
**PART OF 238-6963 WHEEL & TIRE AR**
**AN ATTACHMENT**

**SMCS-4201, 4202, 4203, 4208, 4209** **i01935961**

| NOTE | PART NUMBER | QTY | PART NAME 1 2 3 4 5 6 (PRODUCT LEVEL) | SEE PAGE |
|---|---|---|---|---|
| | **141-7221** | 16 | NUT-HEX FLANGE (3/4-16 THD) | |
| Y | *234-2858* | 1 | WHEEL & TIRE GP (LH) | 286 |
| Y | *234-2859* | 1 | WHEEL & TIRE GP (RH) | 286 |

Y-SEPARATE ILLUSTRATION

**<END>**

## *234-2858* WHEEL & TIRE GP–LH

**S/N: BXC1-UP; DSX1-UP**
**PART OF 234-2857 WHEEL & TIRE GP**
**AN ATTACHMENT**

**SMCS-4201, 4202, 4203, 4208, 4209** **i01935962**

| NOTE | PART NUMBER | QTY | PART NAME 1 2 3 4 5 6 (PRODUCT LEVEL) | SEE PAGE |
|---|---|---|---|---|
| | *234-2856* | 1 | TIRE (18.4-26 TI-06 12PLY) | |
| Y | **6D-0337** | 1 | VALVE GP-TIRE | 266 |
| | **119-7785** | 1 | WHEEL AS (REAR) | |

Y-SEPARATE ILLUSTRATION

**<END>**

## *234-2859* WHEEL & TIRE GP–RH

**S/N: BXC1-UP; DSX1-UP**
**PART OF 234-2857 WHEEL & TIRE GP**
**AN ATTACHMENT**

**SMCS-4201, 4202, 4203, 4208, 4209** **i01935965**

| NOTE | PART NUMBER | QTY | PART NAME 1 2 3 4 5 6 (PRODUCT LEVEL) | SEE PAGE |
|---|---|---|---|---|
| | *234-2856* | 1 | TIRE (18.4-26 TI-06 12PLY) | |
| Y | **6D-0337** | 1 | VALVE GP-TIRE | 266 |
| | **119-7785** | 1 | WHEEL AS (REAR) | |

Y-SEPARATE ILLUSTRATION

**<END>**

## *238-9673* WHEEL & TIRE GP–LH

**S/N: BXC1-UP; DSX1-UP**
**PART OF 238-9672 WHEEL & TIRE AR**
**AN ATTACHMENT**

**SMCS-4201, 4202, 4203, 4208, 4209** **i02005425**

| NOTE | PART NUMBER | QTY | PART NAME 1 2 3 4 5 6 (PRODUCT LEVEL) | SEE PAGE |
|---|---|---|---|---|
| | *201-1975* | 1 | TIRE (440/80 R28) | |
| Y | **6D-0337** | 1 | VALVE GP-TIRE | 266 |
| | **119-7776** | 1 | WHEEL AS (REAR) | |

Y-SEPARATE ILLUSTRATION

**<END>**

## *238-9674* WHEEL & TIRE GP–RH

**S/N: BXC1-UP; DSX1-UP**
**PART OF 238-9672 WHEEL & TIRE AR**
**AN ATTACHMENT**

**SMCS-4201, 4202, 4203, 4208, 4209** **i02005426**

| NOTE | PART NUMBER | QTY | PART NAME 1 2 3 4 5 6 (PRODUCT LEVEL) | SEE PAGE |
|---|---|---|---|---|
| | *201-1975* | 1 | TIRE (440/80 R28) | |
| Y | **6D-0337** | 1 | VALVE GP-TIRE | 266 |
| | **119-7776** | 1 | WHEEL AS (REAR) | |

Y-SEPARATE ILLUSTRATION

**<END>**

## *238-9676* WHEEL & TIRE GP–LH

**S/N: BXC1-UP; DSX1-UP**
**PART OF 238-9675 WHEEL & TIRE AR**
**AN ATTACHMENT**

**SMCS-4201, 4202, 4203, 4208, 4209** **i02005427**

| NOTE | PART NUMBER | QTY | PART NAME 1 2 3 4 5 6 (PRODUCT LEVEL) | SEE PAGE |
|---|---|---|---|---|
| | *201-1974* | 1 | TIRE (16.9R28) | |
| Y | **6D-0337** | 1 | VALVE GP-TIRE | 266 |
| | **119-7776** | 1 | WHEEL AS (REAR) | |

Y-SEPARATE ILLUSTRATION

**<END>**

## *238-9677* WHEEL & TIRE GP–RH

**S/N: BXC1-UP; DSX1-UP**
**PART OF 238-9675 WHEEL & TIRE AR**
**AN ATTACHMENT**

**SMCS-4201, 4202, 4203, 4208, 4209** **i02005428**

| NOTE | PART NUMBER | QTY | PART NAME 1 2 3 4 5 6 (PRODUCT LEVEL) | SEE PAGE |
|---|---|---|---|---|
| | *201-1974* | 1 | TIRE (16.9R28) | |
| Y | **6D-0337** | 1 | VALVE GP-TIRE | 266 |
| | **119-7776** | 1 | WHEEL AS (REAR) | |

Y-SEPARATE ILLUSTRATION

**<END>**

## *238-9679* WHEEL & TIRE GP–LH

**S/N: BXC1-UP; DSX1-UP**
**PART OF 238-9678 WHEEL & TIRE AR**
**AN ATTACHMENT**

**SMCS-4201, 4202, 4203, 4208, 4209** **i02005429**

| NOTE | PART NUMBER | QTY | PART NAME 1 2 3 4 5 6 (PRODUCT LEVEL) | SEE PAGE |
|---|---|---|---|---|
| | *201-1880* | 1 | TIRE (480/80R26) | |
| Y | **6D-0337** | 1 | VALVE GP-TIRE | 266 |
| | **119-7785** | 1 | WHEEL AS (REAR) | |

Y-SEPARATE ILLUSTRATION

**<END>**

## *238-9680* WHEEL & TIRE GP–RH

**S/N: BXC1-UP; DSX1-UP**
**PART OF 238-9678 WHEEL & TIRE AR**
**AN ATTACHMENT**

**SMCS-4201, 4202, 4203, 4208, 4209** **i02005430**

| NOTE | PART NUMBER | QTY | PART NAME 1 2 3 4 5 6 (PRODUCT LEVEL) | SEE PAGE |
|---|---|---|---|---|
| | *201-1880* | 1 | TIRE (480/80R26) | |
| Y | **6D-0337** | 1 | VALVE GP-TIRE | 266 |
| | **119-7785** | 1 | WHEEL AS (REAR) | |

Y-SEPARATE ILLUSTRATION

**<END>**

# BRAKING SYSTEM

## 129-0138 BRAKE GP-PARKING

**S/N: BXC1-UP; DSX1-UP**

**PART OF 184-6570 CONTROL GP-PARKING BRAKE**

**SMCS-3275, 3276, 3277, 4267** **i01876851**

| NOTE | REF NO | GRAPHIC REF | PART NUMBER | QTY | PART NAME 1 2 3 4 5 6 (PRODUCT LEVEL) | SEE PAGE |
|---|---|---|---|---|---|---|
| | 1 | 1 | **230-3809** | 1 | BRAKE AS | |
| | | 1 | **230-3810** | 1 | KIT-BRAKE LINING | |
| | | | | | (INCLUDES LINING AND SPRING) | |
| | | 1 | **230-3811** | 1 | KIT-BRAKE CALIPER | |
| | | | | | (INCLUDES LINING,NUTS,WASHERS,BOOT, | |
| | | | | | THRUST BEARING,BOLT,SLEEVE/BOLT AS,SLEEVE PROTECTORS) | |
| | | 1 | **166-9413** | 1 | KIT-CAM (COUNTERCLOCKWISE) | |
| | | | | | (INCLUDES CAM,BEARING,RETAINER) | |
| | 2 | 1 | **124-9464** | 1 | BRACKET | |
| | 3 | 1 | **130-7282** | 1 | BRACKET | |

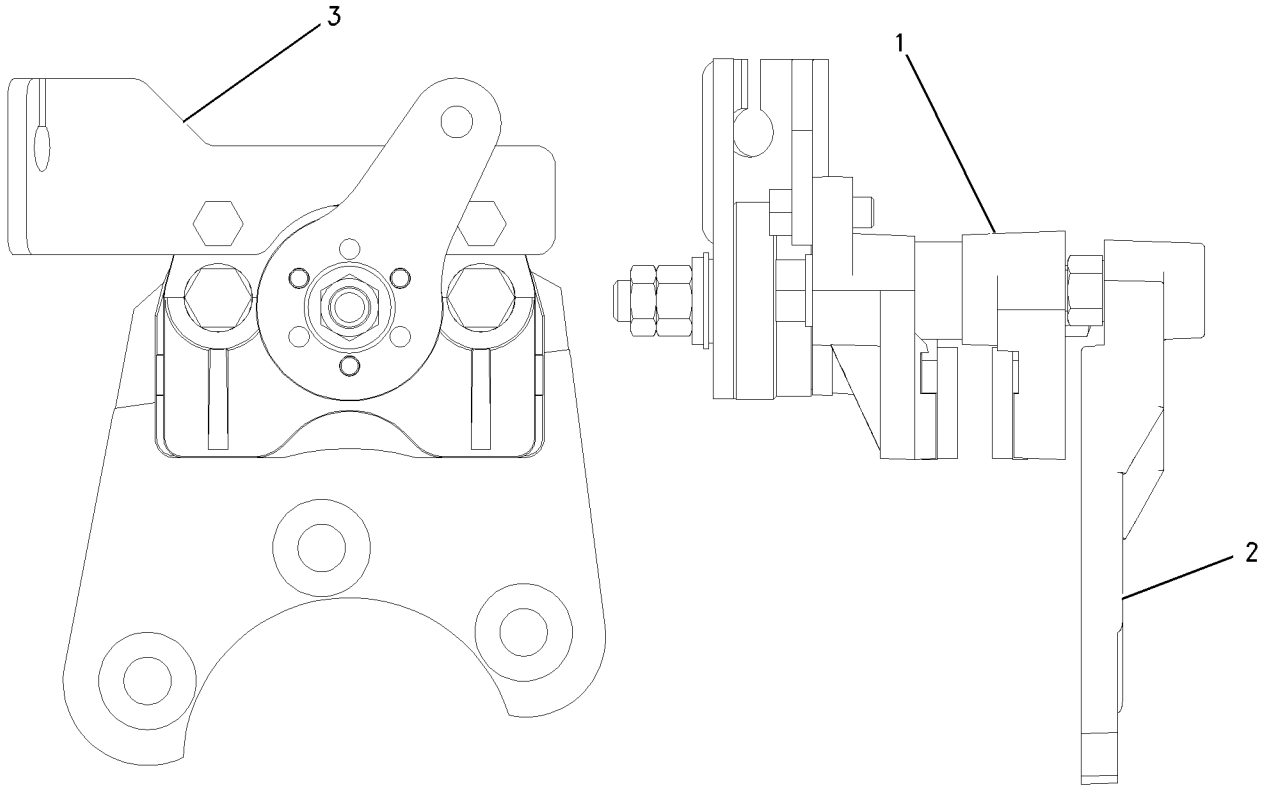


GRAPHIC #1 **<END>** g00729467

# BRAKING SYSTEM

## *163-0754* CONTROL GP-PARKING BRAKE

**S/N: BXC1-UP; DSX1-UP**

**PART OF 184-6570 CONTROL GP-PARKING BRAKE**

**SMCS-4282, 4284** **i01388150**

| NOTE | REF NO | GRAPHIC REF | PART NUMBER | QTY | PART NAME 1 2 3 4 5 6 (PRODUCT LEVEL) | SEE PAGE |
|---|---|---|---|---|---|---|
| Y | 1 | 1 | **163-0753** | 1 | LEVER GP-HAND CONTROL | 295 |
| | 2 | 1 | **163-0755** | 1 | CABLE GP | |
| | | 1 | **6V-8759** | 1 | RING-RETAINING | |

Y-SEPARATE ILLUSTRATION

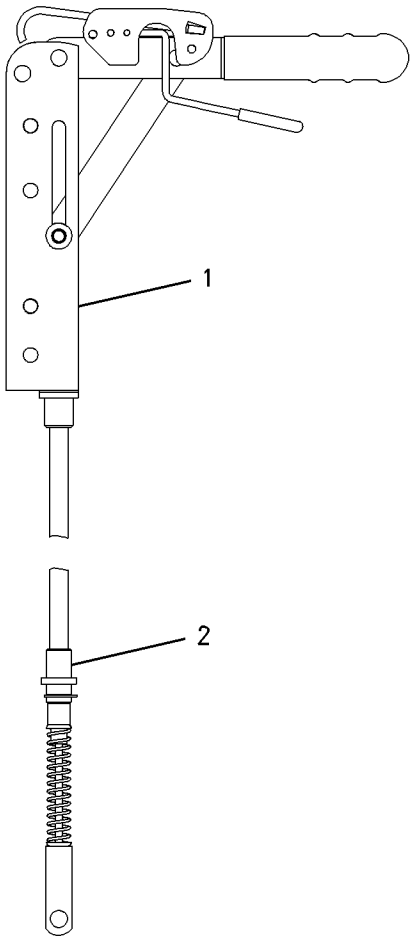


GRAPHIC #1 **<END>** g00729449

# BRAKING SYSTEM

## *184-6570* CONTROL GP-PARKING BRAKE

**S/N: BXC1-UP; DSX1-UP**

**PART OF 184-7970 POWER TRAIN AR**

**SMCS-4282, 4284** **i01499369**

| NOTE | REF NO | GRAPHIC REF | PART NUMBER | QTY | PART NAME 1 2 3 4 5 6 (PRODUCT LEVEL) | SEE PAGE |
|---|---|---|---|---|---|---|
| Y | 1 | 1 | **129-0138** | 1 | BRAKE GP-PARKING | 289 |
| | 2 | 1 | **154-5416** | 1 | SWITCH AS (PARKING BRAKE ALARM) | |
| | | 1 | **155-2270** | 1 | KIT-CONNECTING PLUG (2 PIN) | |
| | | | | | (KIT SERVICES PLUG AS. AND WEDGE) | |
| Y | 3 | 1 | **163-0754** | 1 | CONTROL GP-PARKING BRAKE | 290 |
| | 4 | 1 | **180-7245** | 1 | BRACKET AS | |
| M | 5 | 1 | **6V-9189** | 2 | LOCKNUT (M8X1.25 THD) | |
| | 6 | 1 | **7M-0242** | 3 | WASHER (5MM THK) | |
| | 7 | 1 | **8S-4734** | 3 | BOLT (9/16-12X2 IN) | |
| M | 8 | 1 | **8T-0276** | 2 | BOLT (M8X1.25X45MM) | |
| | 9 | 1 | **8T-4224** | 2 | WASHER-HARD (8.8X16X2MM THK) | |
| | 10 | 1 | **9R-2806** | 1 | PIN | |
| | 11 | 1 | **9R-2807** | 1 | CLIP | |
| M | 12 | 1 | **9X-2043** | 4 | SCREW-TRUSS HEAD (M6X1X14MM) | |

M-METRIC PART
Y-SEPARATE ILLUSTRATION

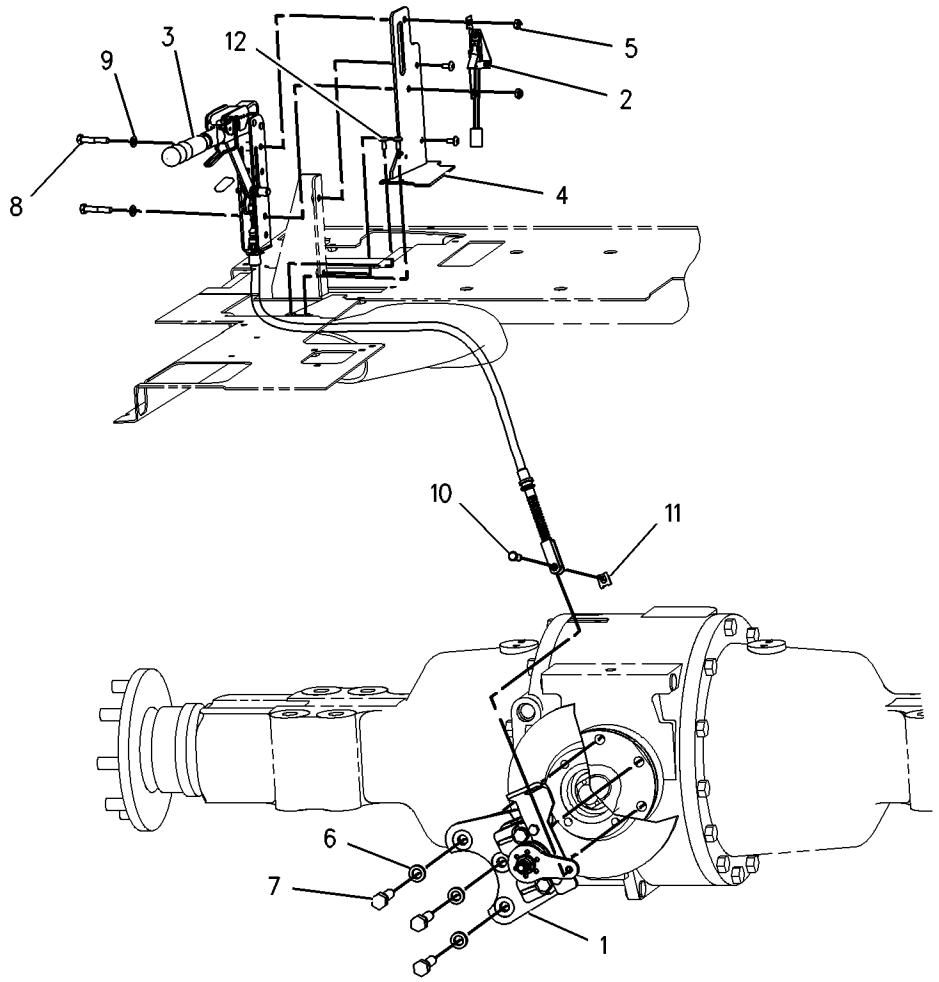


GRAPHIC #1 **<END>** g00725939

# BRAKING SYSTEM

## *165-6918* CONTROL GP-SERVICE BRAKE

**S/N: BXC1-UP; DSX1-UP**

**PART OF 184-7970 POWER TRAIN AR**

**SMCS-4269** **i02005432**

| NOTE | REF NO | GRAPHIC REF | PART NUMBER | QTY | PART NAME 1 2 3 4 5 6 (PRODUCT LEVEL) | SEE PAGE |
|---|---|---|---|---|---|---|
| Y | 1 | 1 | **4E-8619** | 1 | RESERVOIR GP-BRAKE | 296 |
| | 2 | 1 | **5G-8108** | 1 | CLAMP | |
| | 3 | 1 | **6S-8620** | 4 | CLAMP-HOSE | |
| | 4 | 1 | **9R-8189** | 2 | PUSHROD | |
| | 5 | 1 | **9R-9334** | 1 | BRACKET AS | |
| | 6 | 1 | **105-8034** | 2 | SWITCH AS-LIMIT | |
| I | 7 | 1 | **155-8154** | 2 | HOSE AS | |
| | 8 | 1 | **165-6595** | 1 | PIN AS | |
| | 9 | 1 | **165-6599** | 2 | ROD END (YOKE) | |
| | 10 | 1 | **165-6601** | 2 | SPACER (20.75X45X35MMTHK) | |
| | 11 | 1 | **165-6602** | 2 | SPRING | |
| | 12 | 1 | **165-6603** | 1 | PLATE | |
| | 13 | 1 | **167-8160** | 1 | PLATE AS | |
| | 14 | 1 | *167-8161* | 1 | CYLINDER AS | |
| | | 1 | **201-2157** | 1 | KIT-SERVICE | |
| | | 1 | **113-5049** | 1 | TUBE AS | |
| I | 15 | 1 | **167-8164** | 2 | HOSE AS | |
| | 16 | 1 | **171-8623** | 1 | GROMMET | |
| | 17 | 1 | **174-7820** | 2 | TUBE AS | |
| | 18 | 1 | *184-6581* | 2 | CONNECTOR AS | |
| | | | | | (EACH INCLUDES) | |
| | | 1 | **3J-1907** | 1 | SEAL-O-RING | |
| | | 1 | **195-5830** | 1 | CONNECTOR | |
| C | 19 | 1 | **205-3759** | 1 | BRACKET AS | |
| M | | 1 | **8T-7547** | 4 | BOLT (M8X1.25X30MM) | |
| C | 20 | 1 | **205-3760** | 1 | PEDAL AS-LH | |
| | | 1 | **165-6585** | 1 | BEARING-SLEEVE | |
| C | 21 | 1 | **205-3761** | 1 | PEDAL AS-RH | |
| | | 1 | **165-6585** | 1 | BEARING-SLEEVE | |
| | 22 | 1 | **212-3518** | 1 | PLATE AS | |
| | 23 | 1 | *148-8325* | 2 | CONNECTOR GP | |
| | | | | | (EACH INCLUDES) | |
| | | 1 | **3J-1907** | 1 | SEAL-O-RING | |
| | | 1 | **4J-5477** | 1 | SEAL-O-RING | |
| | | 1 | **6V-8641** | 1 | CONNECTOR | |
| | 24 | 1 | *148-8368* | 2 | ELBOW GP | |
| | | | | | (EACH INCLUDES) | |
| | | 1 | **3J-1907** | 1 | SEAL-O-RING | |
| | | 1 | **4J-5477** | 1 | SEAL-O-RING | |
| | | 1 | **6V-8627** | 1 | ELBOW | |
| | 25 | 1 | **1A-0621** | 2 | GROMMET | |
| | 26 | 1 | **1A-5350** | 2 | CLIP | |
| | 27 | 1 | **1H-1200** | 1 | PIN-SPRING | |
| | 28 | 1 | **2P-1279** | 2 | LOCKNUT (9/16-18 THD) | |
| | 29 | 1 | **3S-2093** | 1 | STRAP-CABLE | |
| | 30 | 1 | **4J-5477** | 4 | SEAL-O-RING | |
| M | 31 | 1 | **5C-7261** | 9 | NUT (M8X1.25 THD) | |
| M | 32 | 1 | **8T-4133** | 2 | NUT (M10X1.5 THD) | |
| M | 33 | 1 | **8T-4138** | 6 | BOLT (M6X1X20MM) | |
| M | 34 | 1 | **8T-4189** | 4 | BOLT (M8X1.25X20MM) | |
| M | 35 | 1 | **8T-4200** | 1 | BOLT (M8X1.25X16MM) | |
| | 36 | 1 | **8T-4205** | 6 | WASHER-HARD (7.2X14.5X2MM THK) | |
| | 37 | 1 | **8T-4224** | 14 | WASHER-HARD (8.8X16X2MM THK) | |
| | 38 | 1 | **9R-2807** | 2 | CLIP | |
| | 39 | 1 | **9R-7138** | 2 | PIN-CLEVIS | |
| M | 40 | 1 | **9X-2042** | 7 | SCREW-TRUSS HEAD (M6X1X12MM) | |

## *165-6918* CONTROL GP-SERVICE BRAKE *(contd.)* i02005432

| NOTE | REF NO | GRAPHIC REF | PART NUMBER | QTY | PART NAME 1 2 3 4 5 6 (PRODUCT LEVEL) | SEE PAGE |
|---|---|---|---|---|---|---|
| E | 41 | 1 | **5P-1442** | 2 | HOSE (23.6CM) | |

C-CHANGE FROM PREVIOUS TYPE
E-ORDER BY THE CENTIMETER
I-REFER TO HYDRAULIC INFORMATION SYSTEM
M-METRIC PART
Y-SEPARATE ILLUSTRATION

*165-6918* **CONTROL GP-SERVICE BRAKE** *(contd. )* **i02005432**

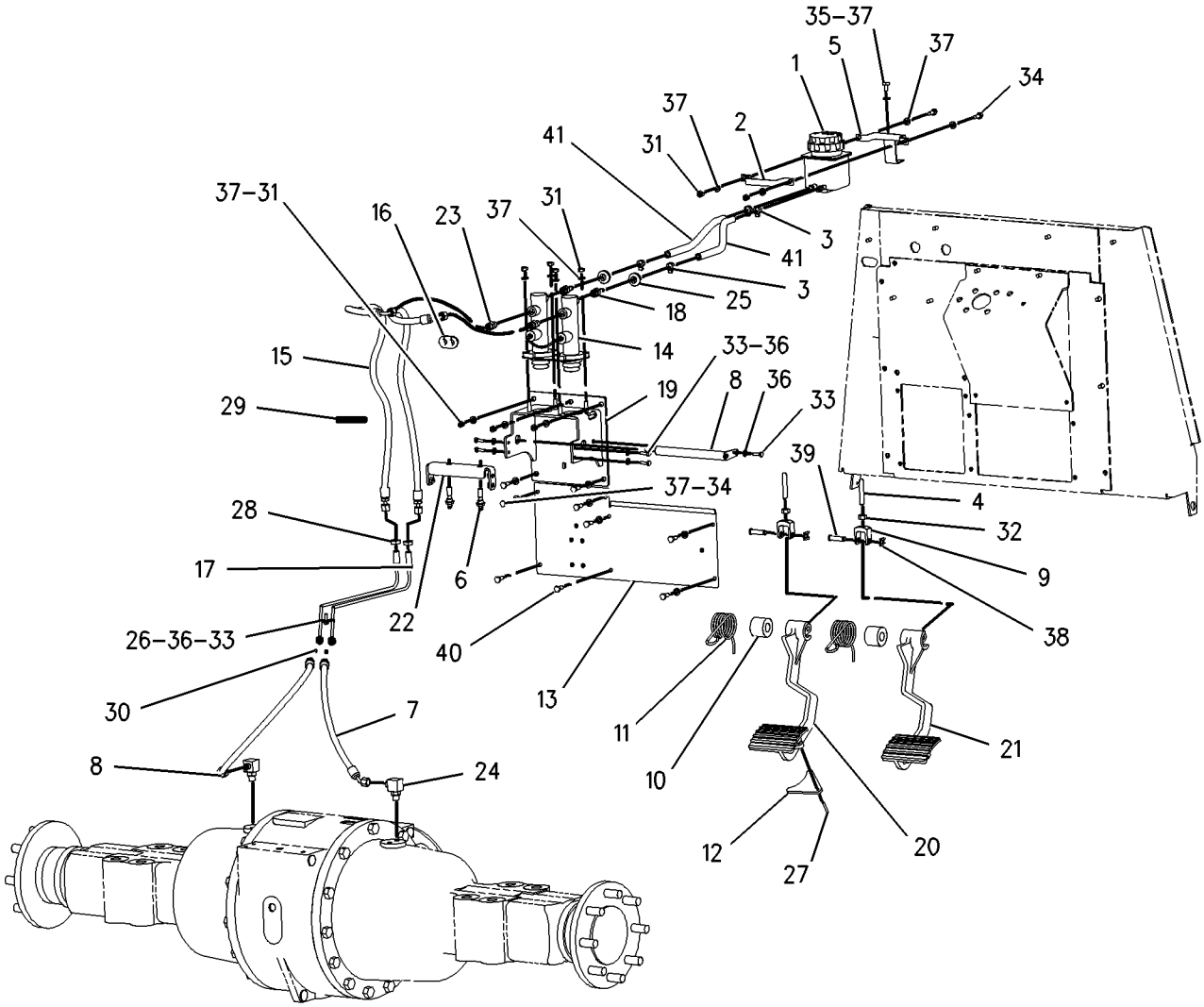


GRAPHIC #1 **<END>** g00864649

# BRAKING SYSTEM

## *163-0753* LEVER GP-HAND CONTROL

**S/N: BXC1-UP; DSX1-UP**

**PART OF 163-0754 CONTROL GP-PARKING BRAKE**

**SMCS-4284** **i01388136**

| NOTE | REF NO | GRAPHIC REF | PART NUMBER | QTY | PART NAME 1 2 3 4 5 6 (PRODUCT LEVEL) | SEE PAGE |
|---|---|---|---|---|---|---|
| | 1 | 1 | **7R-8239** | 2 | SPACER | |
| | 2 | 1 | **039-9133** | 1 | PIN (38.86 MM LG) | |
| | 3 | 1 | **164-9598** | 1 | GRIP | |
| | 4 | 1 | **164-9599** | 1 | COVER | |
| | 5 | 1 | **3B-4610** | 1 | COTTER | |
| | 6 | 1 | **8T-4224** | 2 | WASHER-HARD (8.8X16X2MM THK) | |

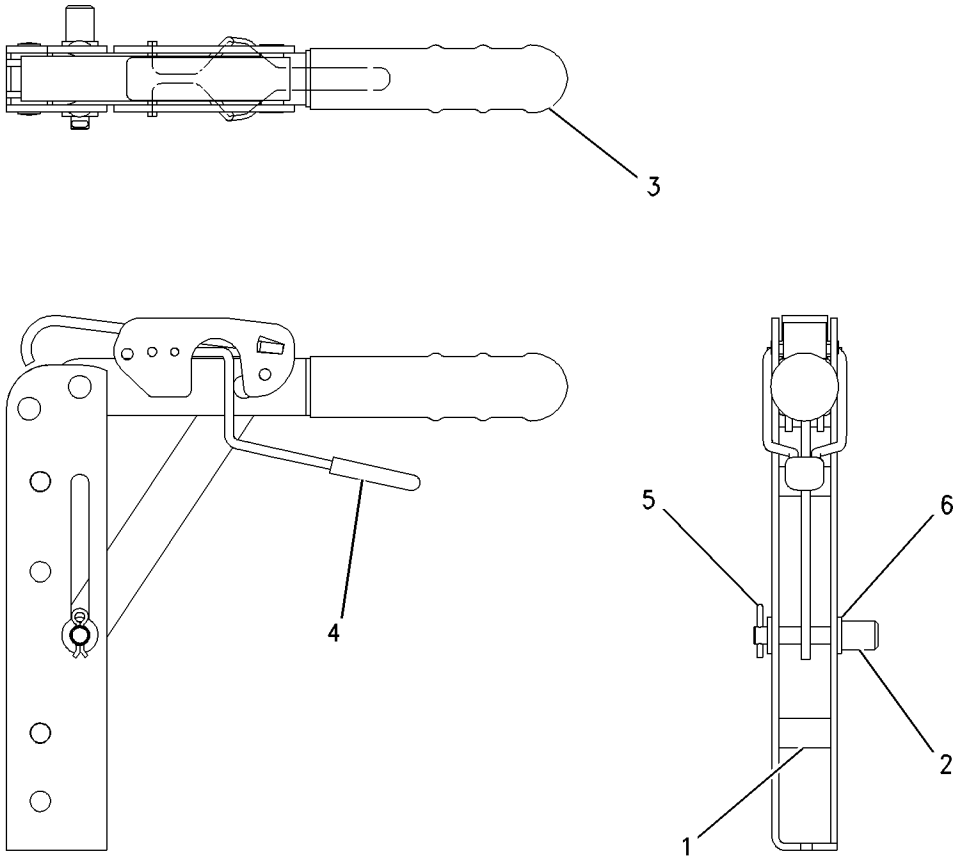


GRAPHIC #1 **<END>** g00729504

# BRAKING SYSTEM

## 4E-8619 RESERVOIR GP-BRAKE

**S/N: BXC1-UP; DSX1-UP**

**PART OF 165-6918 CONTROL GP-SERVICE BRAKE**

**SMCS-4291** **i01670353**

| NOTE | REF NO | GRAPHIC REF | PART NUMBER | QTY | PART NAME 1 2 3 4 5 6 (PRODUCT LEVEL) | SEE PAGE |
|---|---|---|---|---|---|---|
| | 1 | 1 | **7N-7779** | 1 | SOCKET-CONNECTOR | |
| | 2 | 1 | **7N-9737** | 1 | HOUSING-PLUG | |
| | 3 | 1 | **7N-7780** | 1 | PIN-CONNECTOR | |
| F | | 1 | **8R-6263** | | INDICATOR AS | |
| | | | | | AVAILABLE REPAIR KIT(S): | |
| | | | **159-7907** | 1 | KIT-BRAKE RESERVOIR | |

F-NOT SHOWN

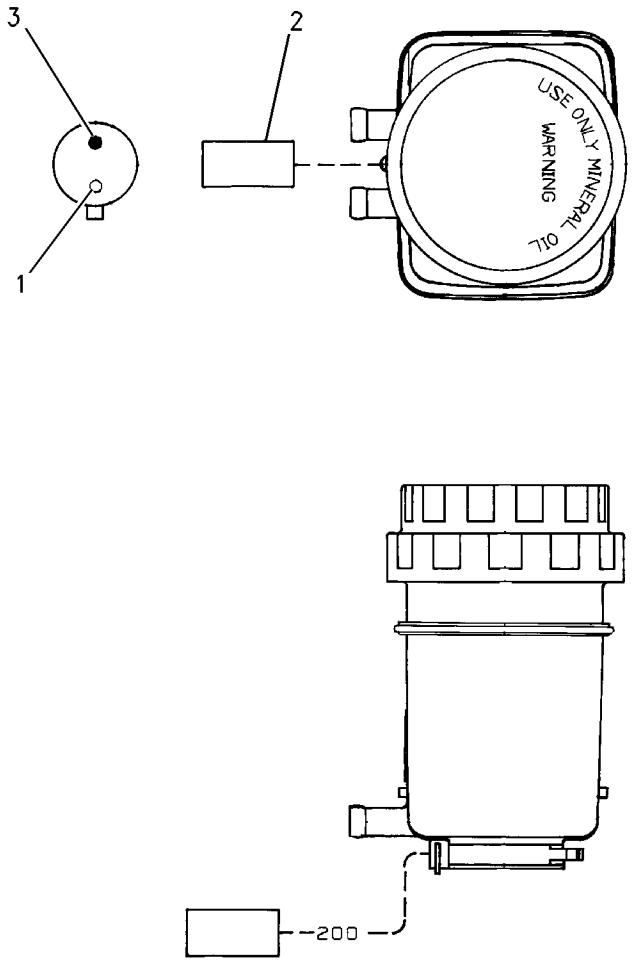


GRAPHIC #1 **<END>** g00862942

# STEERING SYSTEM

## *183-4897* CONTROL GP-STEERING

**S/N: BXC1-UP; DSX1-UP**
**PART OF 214-7008, 214-7009 CAB AR-ENCLOSED ROPS**
**AN ATTACHMENT**

**SMCS-4309, 4310, 4322, 4338, 4343** **i01783030**

| NOTE | REF NO | GRAPHIC REF | PART NUMBER | QTY | PART NAME 1 2 3 4 5 6 (PRODUCT LEVEL) | SEE PAGE |
|---|---|---|---|---|---|---|
| Y | 1 | 1 | *153-9580* | 1 | STEERING WHEEL GP | 304 |
| | 2 | 1 | **163-7940** | 1 | PANEL AS | |
| | 3 | 1 | **185-3529** | 1 | CONSOLE AS | |
| | 4 | 1 | **206-6974** | 1 | STEERING COLUMN AS | |
| M | 5 | 1 | **5C-7261** | 2 | NUT (M8X1.25 THD) | |
| | 6 | 1 | **8T-4121** | 2 | WASHER-HARD (11X21X2.5MM THK) | |
| M | 7 | 1 | **8T-4136** | 2 | BOLT (M10X1.5X25MM) | |
| M | 8 | 1 | **8T-4189** | 2 | BOLT (M8X1.25X20MM) | |
| | 9 | 1 | **8T-4224** | 4 | WASHER-HARD (8.8X16X2MM THK) | |
| M | 10 | 1 | **8T-8894** | 4 | BOLT-SOCKET HEAD (M10X1.5X20MM) | |
| M | 11 | 1 | **9X-2044** | 6 | SCREW-TRUSS HEAD (M6X1X16MM) | |

M-METRIC PART
Y-SEPARATE ILLUSTRATION

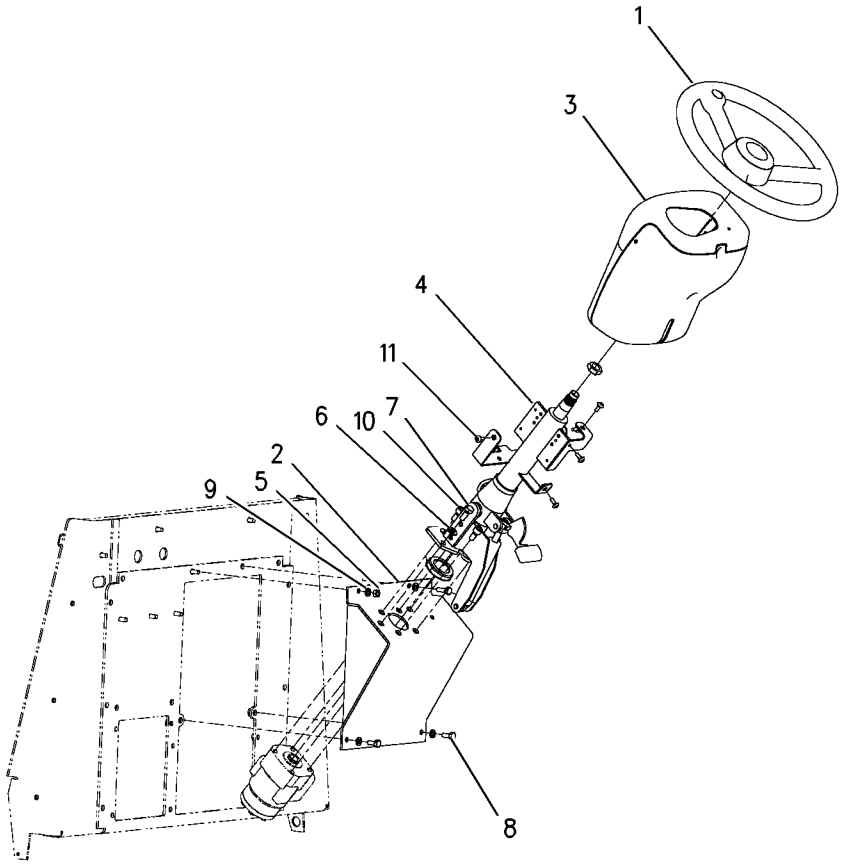


GRAPHIC #1 **<END>** g00875322

# STEERING SYSTEM

## *183-4898* CONTROL GP-STEERING

**S/N: BXC1-UP; DSX1-UP**

**AN ATTACHMENT**

**SMCS-4309, 4310, 4322, 4338, 4343** **i01673625**

| NOTE | REF NO | GRAPHIC REF | PART NUMBER | QTY | PART NAME 1 2 3 4 5 6 (PRODUCT LEVEL) | SEE PAGE |
|---|---|---|---|---|---|---|
| | 1 | 1 | **1V-9385** | 1 | COVER-EMBLEM | |
| | 2 | 1 | **163-7940** | 1 | PANEL AS | |
| | 3 | 1 | **180-8170** | 1 | COLUMN AS-STEER | |
| M | | 1 | **6V-8227** | 1 | NUT (M18X1.5-6 THD) | |
| M | | 1 | **6V-9632** | 5 | NUT-WELD (M6X1 THD) | |
| | | 1 | **7T-1099** | 1 | LINK | |
| | 4 | 1 | **185-3529** | 1 | CONSOLE AS | |
| | 5 | 1 | **032-1557** | 1 | STEERING WHEEL | |
| M | 6 | 1 | **5C-7261** | 2 | NUT (M8X1.25 THD) | |
| | 7 | 1 | **8T-4121** | 2 | WASHER-HARD (11X21X2.5MM THK) | |
| M | 8 | 1 | **8T-4136** | 2 | BOLT (M10X1.5X25MM) | |
| M | 9 | 1 | **8T-4189** | 2 | BOLT (M8X1.25X20MM) | |
| | 10 | 1 | **8T-4224** | 4 | WASHER-HARD (8.8X16X2MM THK) | |
| M | 11 | 1 | **8T-8894** | 4 | BOLT-SOCKET HEAD (M10X1.5X20MM) | |
| | 12 | 1 | **9K-5635** | 3 | SCREW-TAPPING (8-18X1.0 IN) | |
| M | 13 | 1 | **9X-2044** | 6 | SCREW-TRUSS HEAD (M6X1X16MM) | |

M-METRIC PART

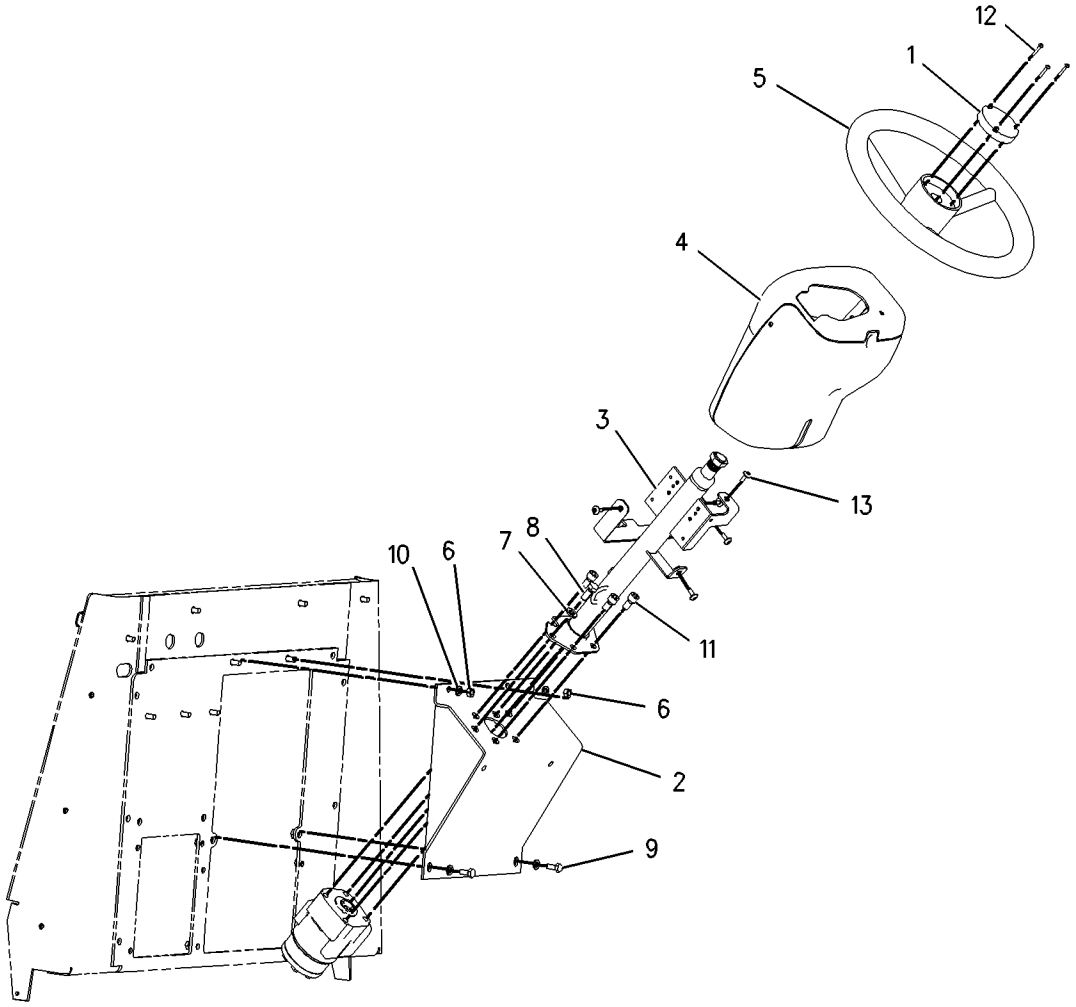


GRAPHIC #1 **<END>** g00856951

# STEERING SYSTEM

## 153-7369 KNOB GP-STEERING

**S/N: BXC1-UP; DSX1-UP**
**FIELD INSTALLATION**
**AN ATTACHMENT**

**SMCS-4309** **i01029926**

| NOTE | REF NO | GRAPHIC REF | PART NUMBER | QTY | PART NAME 1 2 3 4 5 6 (PRODUCT LEVEL) | SEE PAGE |
|---|---|---|---|---|---|---|
| M | 1 | 1 | **8T-6869** | 1 | BOLT (M8X1.25X60MM) | |
| | 2 | 1 | **8T-4224** | 1 | WASHER-HARD (2MM THK) | |
| M | 3 | 1 | **5C-7261** | 1 | NUT (M8X1.25 THD) | |

M-METRIC PART

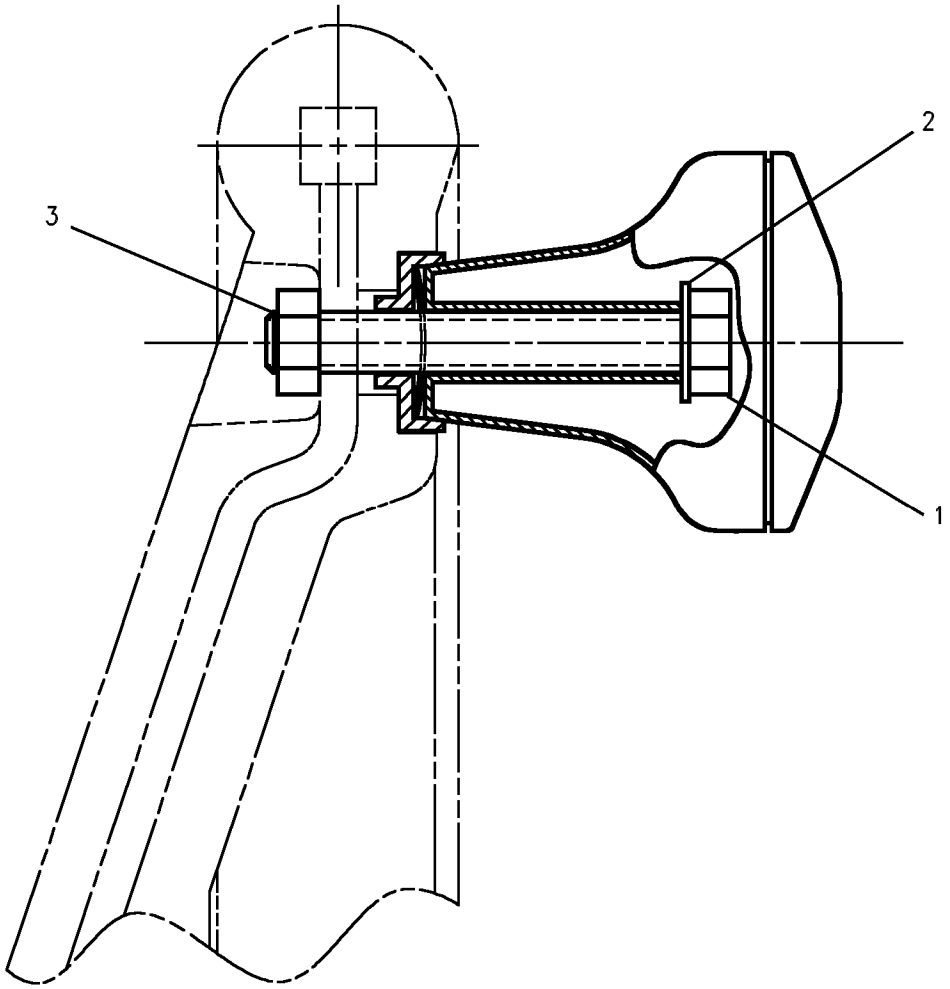


GRAPHIC #1 **<END>** g00534771

# STEERING SYSTEM

## *202-5711* LINES GP-STEERING—2 WHEEL STEER—ALL WHEEL DRIVE

**S/N: BXC1-UP; DSX1-UP**

**PART OF 237-6463 DRIVE AR-BACKHOE LOADER**

**SMCS-4304** **i01909583**

| NOTE | REF NO | GRAPHIC REF | PART NUMBER | QTY | PART NAME 1 2 3 4 5 6 (PRODUCT LEVEL) | SEE PAGE |
|---|---|---|---|---|---|---|
| G | 1 | 1 | **160-2248** | | SLEEVE-ABRASION (8IN) | |
| | 2 | 1 | **5D-1026** | 2 | CLAMP-HOSE | |
| | 3 | 1 | **7K-1181** | 5 | STRAP-CABLE | |
| I | 4 | 1 | **117-3242** | 1 | HOSE AS | |
| | 5 | 1 | *195-2037* | 1 | FITTING AS | |
| | | 1 | **3K-0360** | 1 | SEAL-O-RING | |
| | | 1 | **034-3679** | 1 | FITTING | |
| | 6 | 1 | **204-0317** | 1 | CONNECTOR AS | |
| | | 1 | **3K-0360** | 1 | SEAL-O-RING | |
| | | 1 | **6V-8397** | 1 | SEAL-O-RING | |
| | | 1 | **092-3635** | 1 | CONNECTOR | |
| | 7 | 1 | **210-7465** | 1 | HOSE AS | |
| | 8 | 1 | **210-7466** | 1 | HOSE AS | |
| I | 9 | 1 | **214-3159** | 1 | HOSE AS | |
| | 10 | 1 | *148-8316* | 1 | CONNECTOR AS | |
| | | 1 | **3J-7354** | 1 | SEAL-O-RING | |
| | | 1 | **4J-5477** | 1 | SEAL-O-RING | |
| | | 1 | **6V-8647** | 1 | CONNECTOR | |
| | 11 | 1 | *148-8318* | 2 | CONNECTOR GP | |
| | | | | | (EACH INCLUDES) | |
| | | 1 | **3K-0360** | 1 | SEAL-O-RING | |
| | | 1 | **6V-8397** | 1 | SEAL-O-RING | |
| | | 1 | **6V-8634** | 1 | CONNECTOR | |
| | 12 | 1 | *148-8346* | 1 | ELBOW GP | |
| | | 1 | **3K-0360** | 1 | SEAL-O-RING | |
| | | 1 | **6V-8398** | 1 | SEAL-O-RING | |
| | | 1 | **8T-1686** | 1 | ELBOW | |
| | 13 | 1 | *148-8367* | 1 | ELBOW GP | |
| | | 1 | **6V-8397** | 1 | SEAL-O-RING | |
| | | 1 | **6V-9850** | 1 | ELBOW (SWIVEL) | |
| | 14 | 1 | *148-8369* | 1 | ELBOW GP | |
| | | 1 | **3J-7354** | 1 | SEAL-O-RING | |
| | | 1 | **4J-5477** | 1 | SEAL-O-RING | |
| | | 1 | **6V-8628** | 1 | ELBOW | |
| | 15 | 1 | *148-8383* | 2 | ELBOW AS | |
| | | | | | (EACH INCLUDES) | |
| | | 1 | **3K-0360** | 1 | SEAL-O-RING | |
| | | 1 | **6V-8397** | 1 | SEAL-O-RING | |
| | | 1 | **8T-1683** | 1 | ELBOW | |
| | 16 | 1 | *164-5544* | 2 | ELBOW GP | |
| | | | | | (EACH INCLUDES) | |
| | | 1 | **3E-2333** | 1 | ELBOW | |
| | | 1 | **6V-8398** | 1 | SEAL-O-RING | |
| | 17 | 1 | **5K-5338** | 1 | CLIP | |
| | 18 | 1 | **5P-4295** | 2 | CLIP | |
| | 19 | 1 | **5P-7462** | 1 | CLIP (SLOT) | |
| | 20 | 1 | **5P-7463** | 1 | CLIP (TAB) | |
| | 21 | 1 | **6D-4246** | 1 | CLIP | |
| | 22 | 1 | **6V-0683** | 1 | GROMMET | |
| | 23 | 1 | **8T-4121** | 4 | WASHER-HARD (11X21X2.5MM THK) | |
| M | 24 | 1 | **8T-4136** | 4 | BOLT (M10X1.5X25MM) | |
| | 25 | 1 | **9M-8406** | 1 | CLIP | |
| E | 26 | 1 | **5P-1505** | | HOSE (53CM) | |

## *202-5711* LINES GP-STEERING *(contd.)* i01909583

E-ORDER BY THE CENTIMETER
G-ORDER BY THE INCH
I-SEE HOSE FABRICATION GUIDE
M-METRIC PART

*202-5711* **LINES GP-STEERING** *(contd. )* **i01909583**

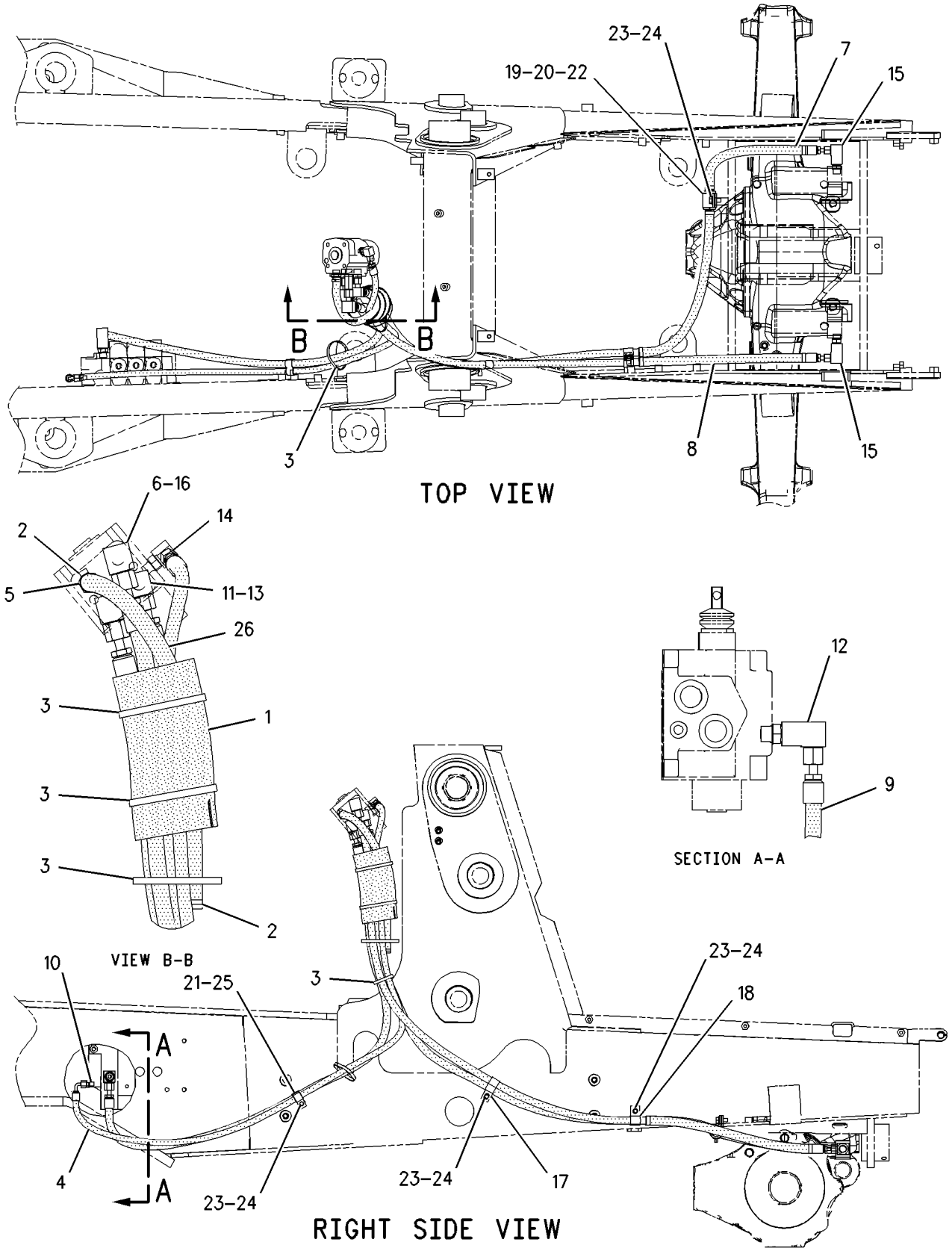


GRAPHIC #1 **<END>** g00995068

# STEERING SYSTEM

## *238-8550* PUMP GP-METERING

**S/N: BXC1-UP; DSX1-UP**

**PART OF 237-6463 DRIVE AR-BACKHOE LOADER**

**SMCS-4312** **i01982156**

| NOTE | PART NUMBER | QTY | PART NAME 1 2 3 4 5 6 (PRODUCT LEVEL) | SEE PAGE |
|---|---|---|---|---|
| | **227-4709** | 1 | KIT-SEAL (STEERING METERING PUMP) | |

**<END>**

# STEERING SYSTEM

## *153-9580* STEERING WHEEL GP

**S/N: BXC1-UP; DSX1-UP**
**PART OF 183-4897 CONTROL GP-STEERING**
**AN ATTACHMENT**

**SMCS-4309** **i00810363**

| NOTE | REF NO | GRAPHIC REF | PART NUMBER | QTY | PART NAME 1 2 3 4 5 6 (PRODUCT LEVEL) | SEE PAGE |
|---|---|---|---|---|---|---|
| | 1 | 1 | **8R-2916** | 1 | BUTTON AS | |
| | 2 | 1 | **145-9291** | 1 | WHEEL AS-STEERING | |
| | 3 | 1 | **153-7368** | 1 | PLUG | |

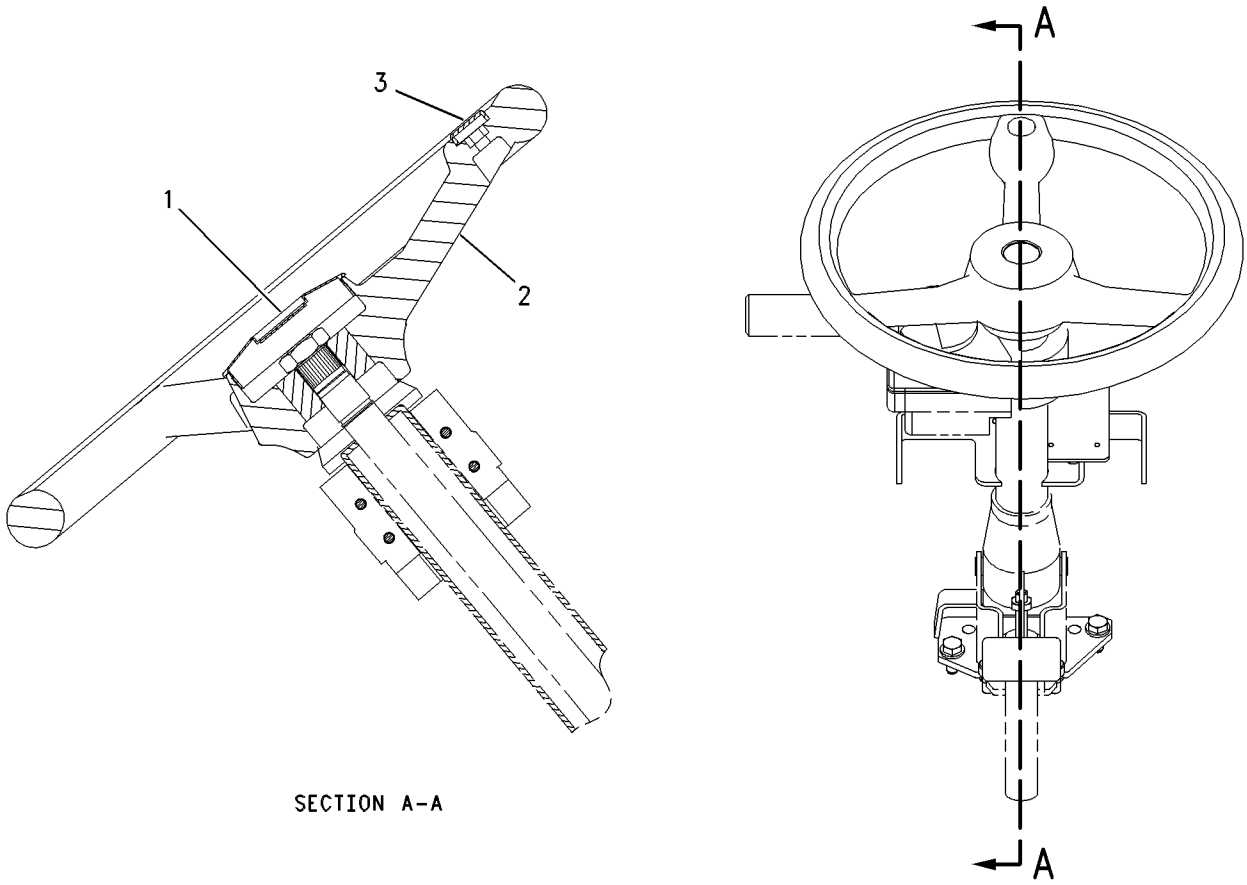


GRAPHIC #1 **<END>** g00319225

# STEERING SYSTEM

## 188-7471 VALVE GP-PRIORITY—STEERING

**S/N: BXC1-UP; DSX1-UP**

**PART OF 185-5911, 185-5913 VALVE GP-BANK 2, 185-5912, 185-5914 VALVE GP-BANK 3**

**AN ATTACHMENT**

**SMCS-4320, 5137** **i01695195**

| NOTE | REF NO | GRAPHIC REF | PART NUMBER | QTY | PART NAME 1 2 3 4 5 6 (PRODUCT LEVEL) | SEE PAGE |
|---|---|---|---|---|---|---|
| | 1 | 1 | **9S-8006** | 1 | PLUG | |
| | 2 | 1 | **103-4754** | 1 | SPRING | |
| | 3 | 1 | **9T-0655** | 1 | VALVE GP-RELIEF | |
| | 3A | 1 | **1S-8947** | 1 | SEAL-O-RING | |
| | 3B | 1 | **3D-2824** | 1 | SEAL-O-RING | |
| | 3C | 1 | **9T-0656** | 1 | RING | |
| | 4 | 1 | **5B-9318** | 1 | BALL | |
| | 5 | 1 | **180-9157** | 1 | SEAT AS | |
| | 5A | 1 | **4T-7807** | 1 | RING-BACKUP | |
| | 5B | 1 | **7J-0204** | 1 | SEAL-O-RING | |
| | 5C | 1 | **8T-2360** | 1 | SEAL-O-RING | |
| | 6 | 1 | **9S-9334** | 1 | PLUG | |
| | 7 | 1 | **7M-8485** | 1 | SEAL-O-RING | |

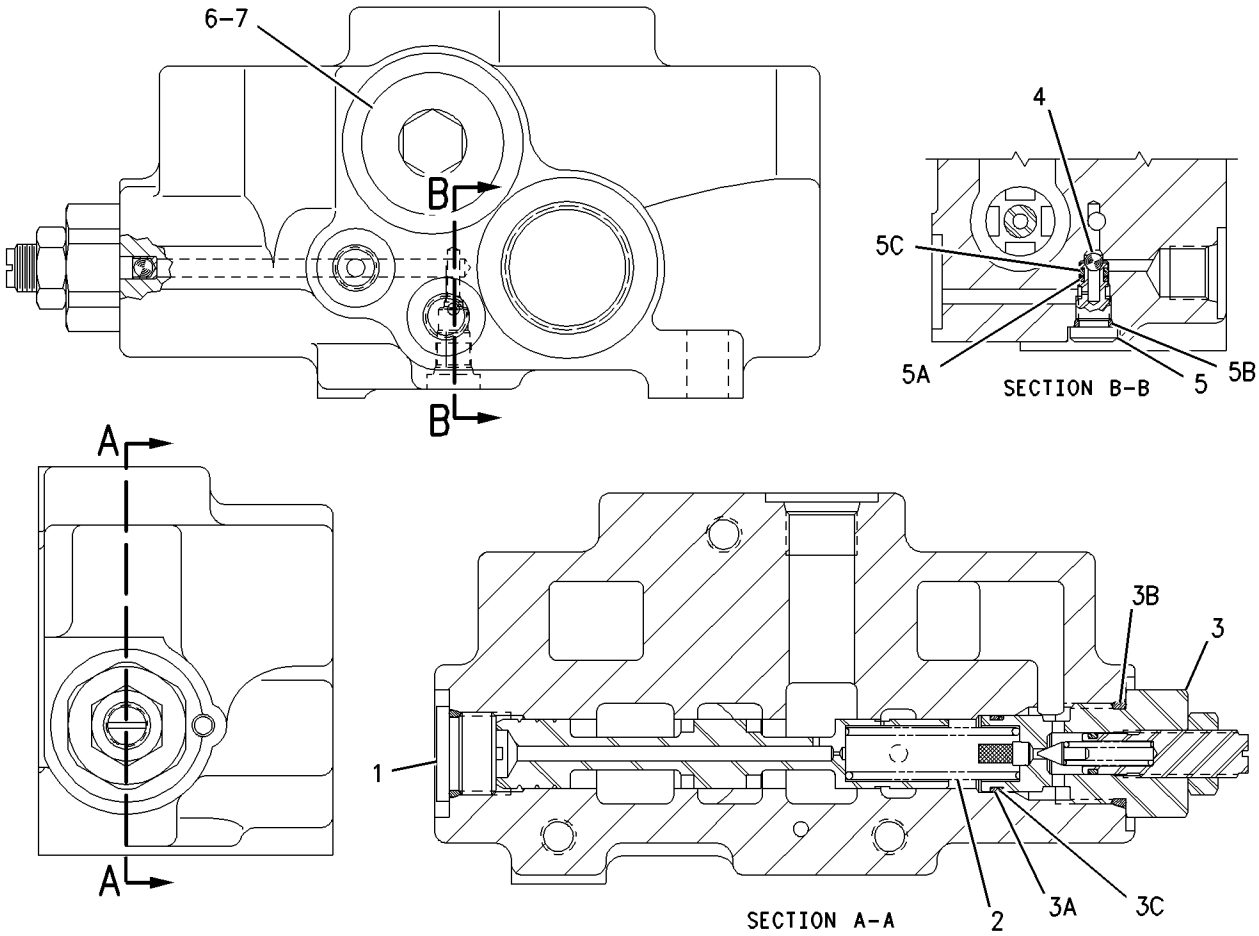


GRAPHIC #1 **<END>** g00872884

# FRAME AND BODY

## *188-0859* BOX GP-BATTERY—POWER SHIFT

**S/N: BXC1-UP; DSX1-UP**
**PART OF 228-4590, 228-4591 BOX GP-BATTERY**
**AN ATTACHMENT**

**SMCS-7257** **i01650172**

| NOTE | REF NO | GRAPHIC REF | PART NUMBER | QTY | PART NAME 1 2 3 4 5 6 (PRODUCT LEVEL) | SEE PAGE |
|---|---|---|---|---|---|---|
| M | 1 | 1 | **8T-2910** | 2 | NUT-WING | |
| Y | 2 | 1 | **118-6842** | 1 | DOOR GP-BATTERY | 316 |
| | 3 | 1 | **118-6854** | 1 | TREAD | |
| | 4 | 1 | **139-3562** | 1 | COVER | |
| | 5 | 1 | **164-3876** | 1 | STEP AS | |
| | 6 | 1 | **188-0858** | 1 | BATTERY BOX AS | |
| | 7 | 1 | **190-5122** | 1 | PLATE AS | |
| | 8 | 1 | **5P-4116** | 6 | WASHER-HARD (8.8X20.5X2MM THK) | |
| M | 9 | 1 | **8T-4183** | 4 | BOLT (M12X1.75X40MM) | |
| M | 10 | 1 | **8T-4189** | 6 | BOLT (M8X1.25X20MM) | |
| M | 11 | 1 | **8T-4200** | 7 | BOLT (M8X1.25X16MM) | |
| | 12 | 1 | **8T-4223** | 4 | WASHER-HARD (13.5X25.5X3MM THK) | |
| | 13 | 1 | **8T-4224** | 7 | WASHER-HARD (8.8X16X2MM THK) | |
| M | 14 | 1 | **8T-7963** | 1 | LOCKNUT | |

M-METRIC PART
Y-SEPARATE ILLUSTRATION

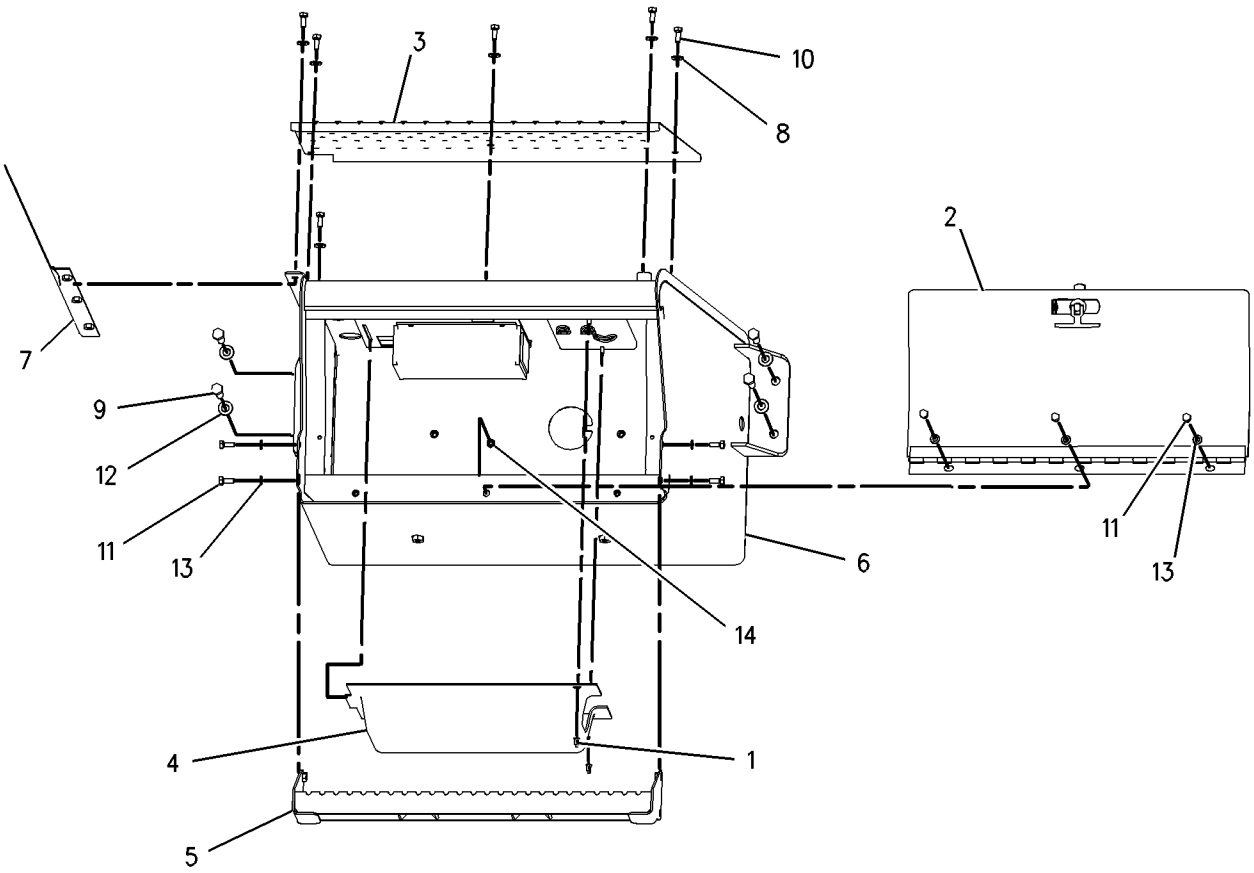


GRAPHIC #1 **<END>** g00795345

# FRAME AND BODY

## *188-0860* BOX GP-BATTERY

**S/N: BXC1-UP; DSX1-UP**
**PART OF 228-4588, 228-4589 BOX GP-BATTERY**
**AN ATTACHMENT**

**SMCS-7257** **i01650179**

| NOTE | REF NO | GRAPHIC REF | PART NUMBER | QTY | PART NAME 1 2 3 4 5 6 (PRODUCT LEVEL) | SEE PAGE |
|---|---|---|---|---|---|---|
| | 1 | 1 | **7T-8895** | 1 | GROMMET | |
| Y | 2 | 1 | **118-6842** | 1 | DOOR GP-BATTERY | 316 |
| | 3 | 1 | **118-6854** | 1 | TREAD | |
| | 4 | 1 | **164-3876** | 1 | STEP AS | |
| | 5 | 1 | **188-0857** | 1 | BATTERY BOX AS | |
| | 6 | 1 | **190-5122** | 1 | PLATE AS | |
| | 7 | 1 | **5P-4116** | 6 | WASHER-HARD (8.8X20.5X2MM THK) | |
| M | 8 | 1 | **8T-4183** | 4 | BOLT (M12X1.75X40MM) | |
| M | 9 | 1 | **8T-4189** | 6 | BOLT (M8X1.25X20MM) | |
| M | 10 | 1 | **8T-4200** | 7 | BOLT (M8X1.25X16MM) | |
| | 11 | 1 | **8T-4223** | 4 | WASHER-HARD (13.5X25.5X3MM THK) | |
| | 12 | 1 | **8T-4224** | 7 | WASHER-HARD (8.8X16X2MM THK) | |
| M | 13 | 1 | **8T-7963** | 1 | LOCKNUT | |

M-METRIC PART
Y-SEPARATE ILLUSTRATION

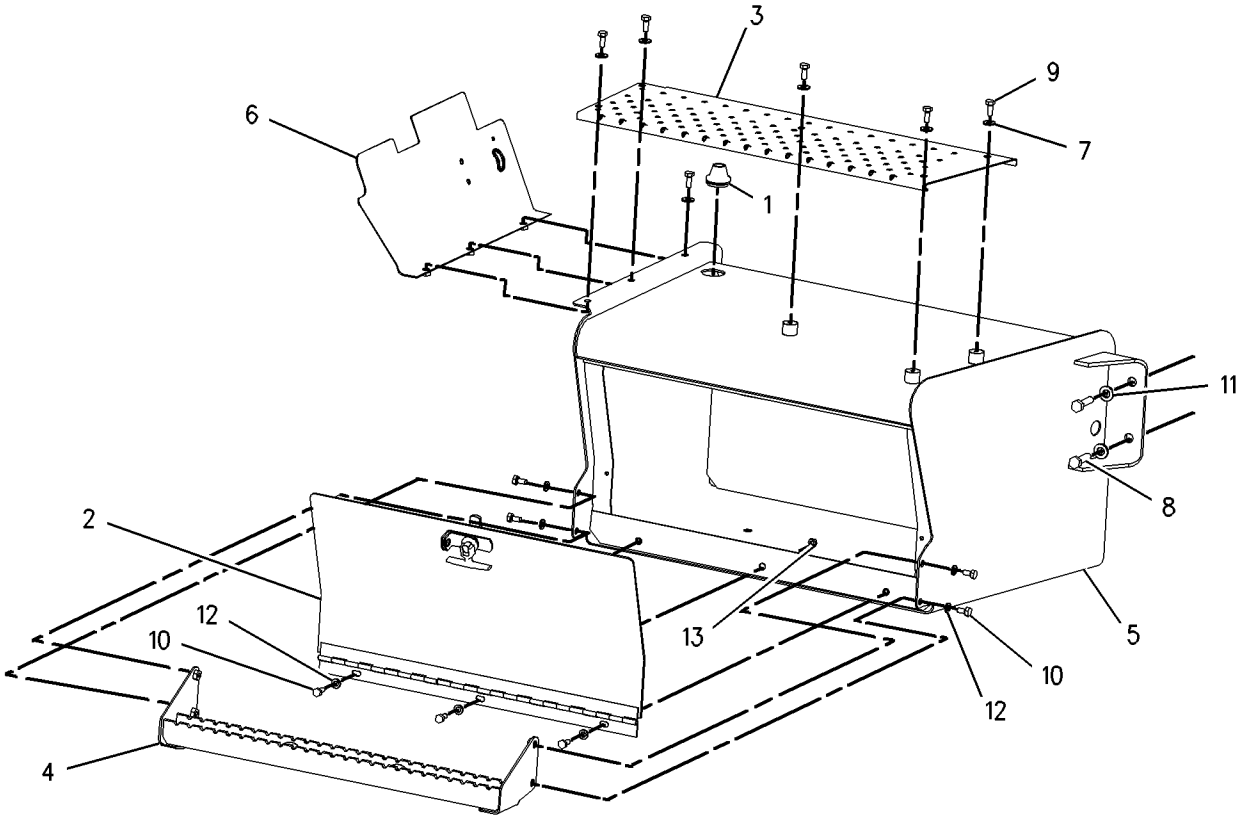


GRAPHIC #1 **<END>** g00852685

# FRAME AND BODY

## *223-6178* BOX GP-BATTERY

**S/N: BXC1-UP; DSX1-UP**
**PART OF 228-4587 BOX GP-BATTERY**
**AN ATTACHMENT**

**SMCS-7257** **i02000018**

| NOTE | REF NO | GRAPHIC REF | PART NUMBER | QTY | PART NAME 1 2 3 4 5 6 (PRODUCT LEVEL) | SEE PAGE |
|---|---|---|---|---|---|---|
| | 1 | 1 | **148-7868** | 1 | STEP AS | |
| | 2 | 1 | **214-1669** | 1 | BOX AS | |
| | | 1 | **7T-1099** | 1 | LINK | |
| M | | 1 | **8T-3490** | 4 | NUT-WELD (M10X1.5 THD) | |
| M | | 1 | **8T-3612** | 4 | NUT-WELD (M8X1.25 THD) | |
| | 3 | 1 | **214-1670** | 1 | PLATE | |
| | 4 | 1 | **7X-0578** | 2 | WASHER-HARD (10.2X32X2.5MM THK) | |
| | 5 | 1 | **8T-4121** | 2 | WASHER-HARD (11X21X2.5MM THK) | |
| M | 6 | 1 | **8T-4136** | 4 | BOLT (M10X1.5X25MM) | |
| M | 7 | 1 | **8T-4183** | 4 | BOLT (M12X1.75X40MM) | |
| | 8 | 1 | **8T-4223** | 4 | WASHER-HARD (13.5X25.5X3MM THK) | |
| | 9 | 1 | **7T-8895** | 1 | GROMMET | |

M-METRIC PART

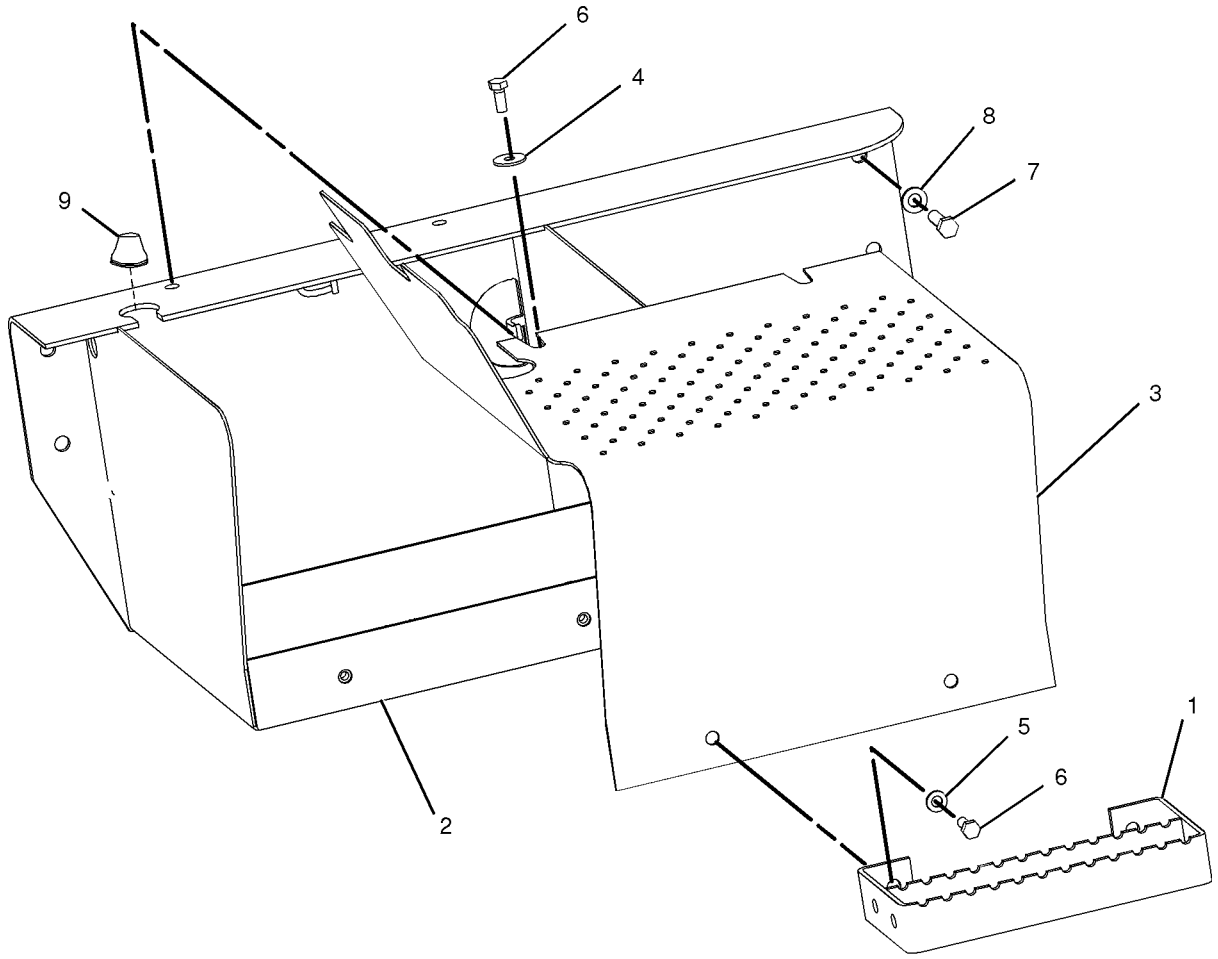


GRAPHIC #1 **<END>** g01034933

## *228-4587* BOX GP-BATTERY

**S/N: BXC1-UP; DSX1-UP**
**STANDARD & AUTOSHIFT TRANSMISSION, NO STORAGE, STANDARD BATTERY**
**AN ATTACHMENT**

**SMCS-7257** **i01807040**

| NOTE | PART NUMBER | QTY | PART NAME 1 2 3 4 5 6 (PRODUCT LEVEL) | SEE PAGE |
|---|---|---|---|---|
| Y | *223-6181* | 1 | BATTERY GP | 108 |
| Y | *223-6178* | 1 | BOX GP-BATTERY | 308 |

Y-SEPARATE ILLUSTRATION

**<END>**

## *228-4588* BOX GP-BATTERY

**S/N: BXC1-UP; DSX1-UP**
**STANDARD TRANSMISSION, STORAGE, STANDARD BATTERY**
**AN ATTACHMENT**

**SMCS-7257** **i01807029**

| NOTE | PART NUMBER | QTY | PART NAME 1 2 3 4 5 6 (PRODUCT LEVEL) | SEE PAGE |
|---|---|---|---|---|
| Y | *122-5865* | 1 | BATTERY GP | 106 |
| Y | *188-0860* | 1 | BOX GP-BATTERY | 307 |

Y-SEPARATE ILLUSTRATION

**<END>**

## *228-4589* BOX GP-BATTERY

**S/N: BXC1-UP; DSX1-UP**
**STANDARD TRANSMISSION, STORAGE, HEAVY DUTY BATTERY**
**AN ATTACHMENT**

**SMCS-7257** **i01807016**

| NOTE | PART NUMBER | QTY | PART NAME 1 2 3 4 5 6 (PRODUCT LEVEL) | SEE PAGE |
|---|---|---|---|---|
| Y | *119-8016* | 1 | BATTERY GP | 104 |
| Y | *188-0860* | 1 | BOX GP-BATTERY | 307 |

Y-SEPARATE ILLUSTRATION

**<END>**

## *228-4590* BOX GP-BATTERY

**S/N: BXC1-UP; DSX1-UP**
**AUTOSHIFT TRANSMISSION, STORAGE, STANDARD BATTERY**
**AN ATTACHMENT**

**SMCS-7257** **i01807067**

| NOTE | PART NUMBER | QTY | PART NAME 1 2 3 4 5 6 (PRODUCT LEVEL) | SEE PAGE |
|---|---|---|---|---|
| Y | *122-5865* | 1 | BATTERY GP | 106 |
| Y | *188-0859* | 1 | BOX GP-BATTERY | 306 |

Y-SEPARATE ILLUSTRATION

**<END>**

# *228-4591* BOX GP-BATTERY

**S/N: BXC1-UP; DSX1-UP**
**AUTOSHIFT TRANSMISSION, STORAGE, HEAVY DUTY**
**AN ATTACHMENT**

**SMCS-7257** **i01807049**

| NOTE | PART NUMBER | QTY | PART NAME 1 2 3 4 5 6 (PRODUCT LEVEL) | SEE PAGE |
|---|---|---|---|---|
| Y | *119-8016* | 1 | BATTERY GP | 104 |
| Y | *188-0859* | 1 | BOX GP-BATTERY | 306 |

Y-SEPARATE ILLUSTRATION

**<END>**

# FRAME AND BODY

## *112-1809* BUMPER GP-FRONT

**S/N: BXC1-UP; DSX1-UP**
**AN ATTACHMENT**

**SMCS-7156** **i01108522**

| NOTE | REF NO | GRAPHIC REF | PART NUMBER | QTY | PART NAME 1 2 3 4 5 6 (PRODUCT LEVEL) | SEE PAGE |
|---|---|---|---|---|---|---|
| | 1 | 1 | **7X-0572** | 4 | WASHER-HARD (M24.0X44.5X6MM THK) | |
| | 2 | 1 | **113-4495** | 1 | BUMPER AS | |
| M | 3 | 1 | **7X-2568** | 4 | BOLT (M20X2.5X180MM) | |

M-METRIC PART

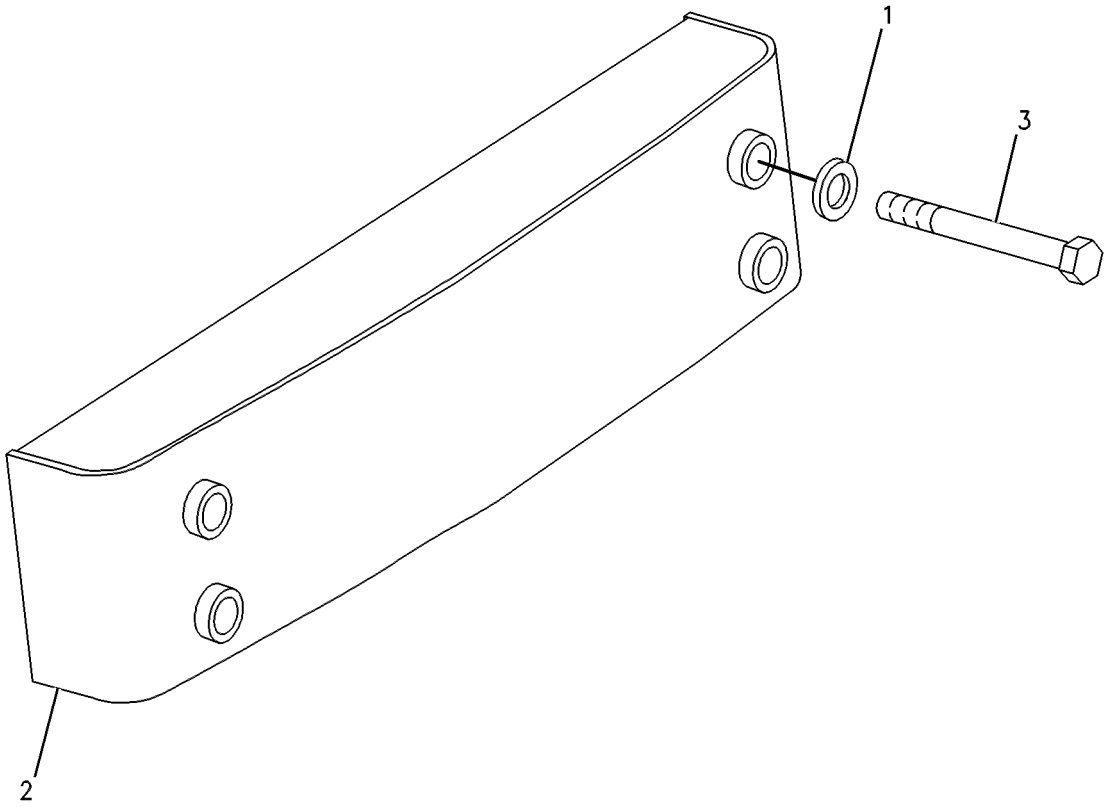


GRAPHIC #1 **<END>** g00257015

# FRAME AND BODY

## *106-5878* COUNTERWEIGHT GP

**S/N: BXC1-UP; DSX1-UP**
**145KG (320 LB)**
**AN ATTACHMENT**

**SMCS-7056** **i01943220**

| NOTE | REF NO | GRAPHIC REF | PART NUMBER | QTY | PART NAME 1 2 3 4 5 6 (PRODUCT LEVEL) | SEE PAGE |
|---|---|---|---|---|---|---|
| | 1 | 1 | **112-4417** | 1 | COUNTERWEIGHT (144KG) | |
| M | 2 | 1 | **8C-8478** | 4 | BOLT (M20X2.5X140MM) | |
| | 3 | 1 | **8T-4123** | 4 | WASHER-PLATED (22X35X3.5MM THK) | |

M-METRIC PART

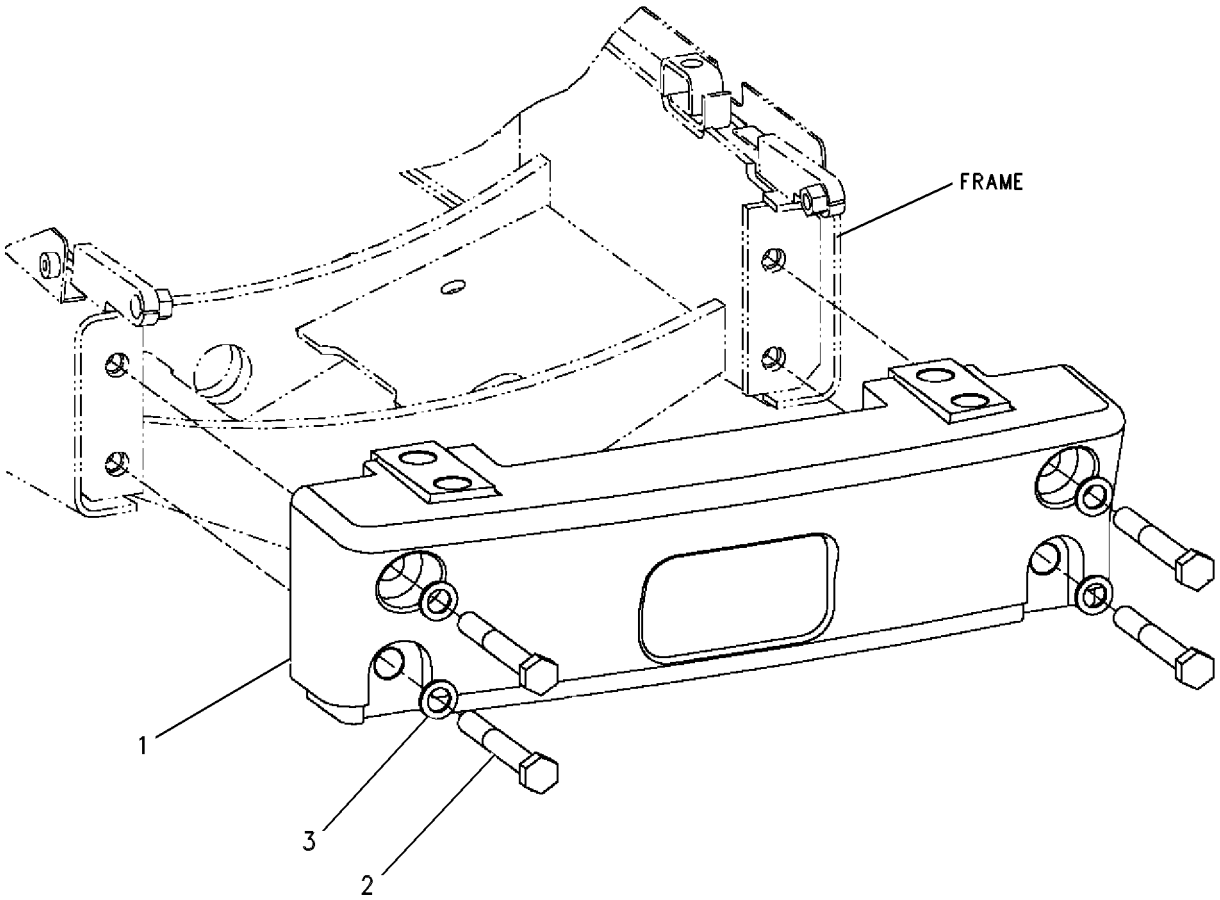


GRAPHIC #1 **<END>** g00257331

# FRAME AND BODY

## *106-5879* COUNTERWEIGHT GP

**S/N: BXC1-UP; DSX1-UP**
**249KG (550 LB)**
**AN ATTACHMENT**

**SMCS-7056** **i01995085**

| NOTE | REF NO | GRAPHIC REF | PART NUMBER | QTY | PART NAME 1 2 3 4 5 6 (PRODUCT LEVEL) | SEE PAGE |
|---|---|---|---|---|---|---|
| | 1 | 1 | **240-0019** | 1 | COUNTERWEIGHT GP | |
| | 2 | 1 | **112-4417** | 1 | COUNTERWEIGHT (144KG) | |
| | 3 | 1 | **112-4418** | 1 | COUNTERWEIGHT (101.6KG) | |
| | 4 | 1 | **113-7906** | 2 | U-BOLT | |
| M | 5 | 1 | **8T-4001** | 4 | NUT (M24X3 THD) | |
| | 6 | 1 | **8T-4167** | 4 | WASHER-HARD (26X44X4MM THK) | |
| M | 7 | 1 | **8C-8478** | 4 | BOLT (M20X2.5X140MM) | |
| | 8 | 1 | **8T-4123** | 4 | WASHER-PLATED (22X35X3.5MM THK) | |

M-METRIC PART

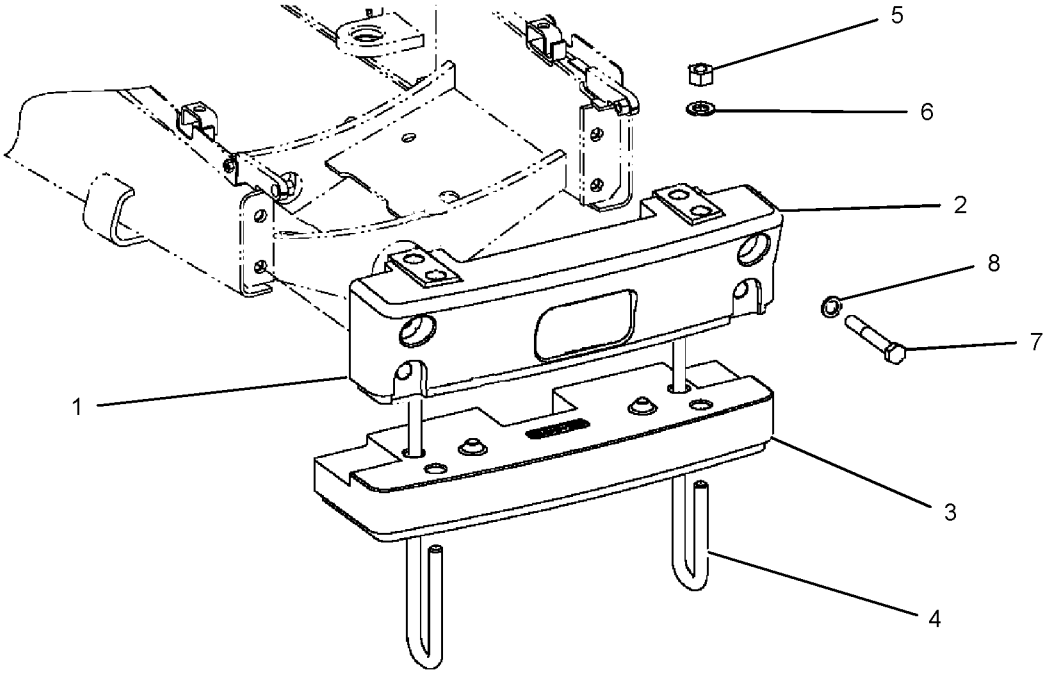


GRAPHIC #1 **<END>** g01032581

# FRAME AND BODY

## *106-5880* COUNTERWEIGHT GP

**S/N: BXC1-UP; DSX1-UP**
**354KG (780 LB)**
**AN ATTACHMENT**

**SMCS-7056** **i01990715**

| NOTE | REF NO | GRAPHIC REF | PART NUMBER | QTY | PART NAME 1 2 3 4 5 6 (PRODUCT LEVEL) | SEE PAGE |
|---|---|---|---|---|---|---|
| | 1 | 1 | **240-0018** | 1 | COUNTERWEIGHT GP | |
| | 2 | 1 | **112-4417** | 1 | COUNTERWEIGHT (144KG) | |
| | 3 | 1 | **112-4418** | 2 | COUNTERWEIGHT (101.6KG) | |
| | 4 | 1 | **113-7905** | 2 | U-BOLT | |
| | 5 | 1 | **8T-4167** | 4 | WASHER-HARD (26X44X4MM THK) | |
| M | 6 | 1 | **8T-4001** | 4 | NUT (M24X3 THD) | |
| M | 7 | 1 | **8C-8478** | 4 | BOLT (M20X2.5X140MM) | |
| | 8 | 1 | **8T-4123** | 4 | WASHER-PLATED (22X35X3.5MM THK) | |

M-METRIC PART

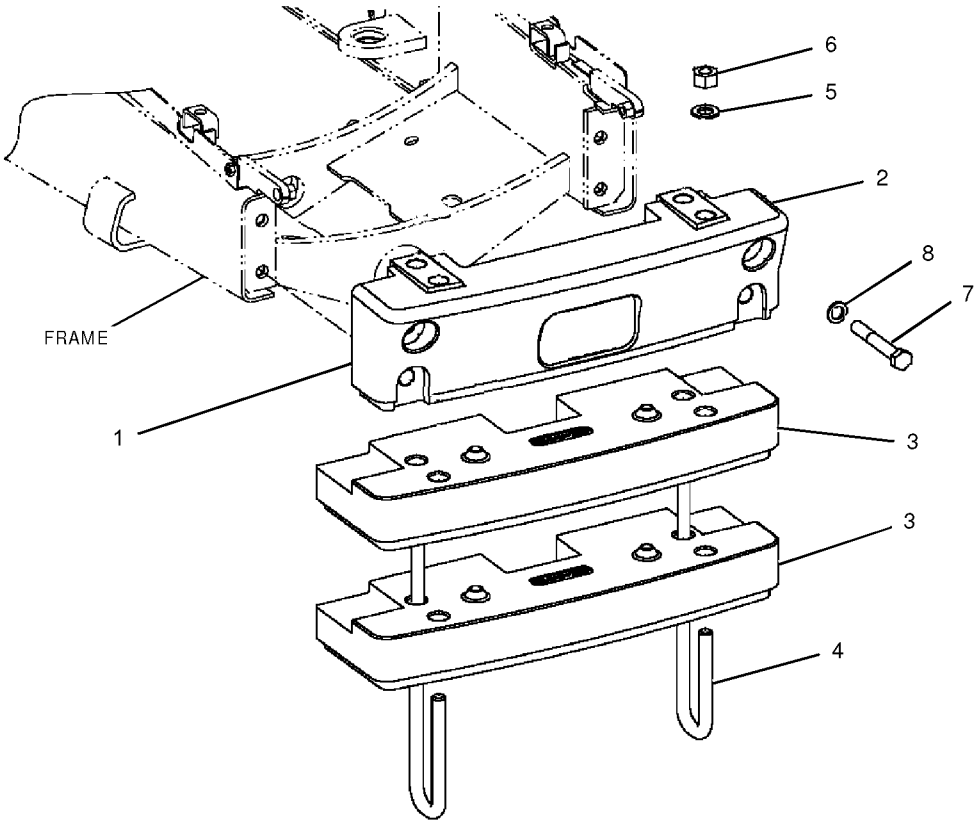


GRAPHIC #1 **<END>** g01031087

# FRAME AND BODY

## *106-5881* COUNTERWEIGHT GP

**S/N: BXC1-UP; DSX1-UP**
**459KG (1010 LB)**
**AN ATTACHMENT**

**SMCS-7056** **i01995087**

| NOTE | REF NO | GRAPHIC REF | PART NUMBER | QTY | PART NAME 1 2 3 4 5 6 (PRODUCT LEVEL) | SEE PAGE |
|---|---|---|---|---|---|---|
| | 1 | 1 | **240-0017** | 1 | COUNTERWEIGHT GP | |
| | 2 | 1 | **112-4417** | 1 | COUNTERWEIGHT (144KG) | |
| | 3 | 1 | **112-4418** | 3 | COUNTERWEIGHT (101.6KG) | |
| | 4 | 1 | **113-2662** | 2 | U-BOLT | |
| M | 5 | 1 | **8T-4001** | 4 | NUT (M24X3 THD) | |
| | 6 | 1 | **8T-4167** | 4 | WASHER-HARD (26X44X4MM THK) | |
| M | 7 | 1 | **8C-8478** | 4 | BOLT (M20X2.5X140MM) | |
| | 8 | 1 | **8T-4123** | 4 | WASHER-PLATED (22X35X3.5MM THK) | |

M-METRIC PART

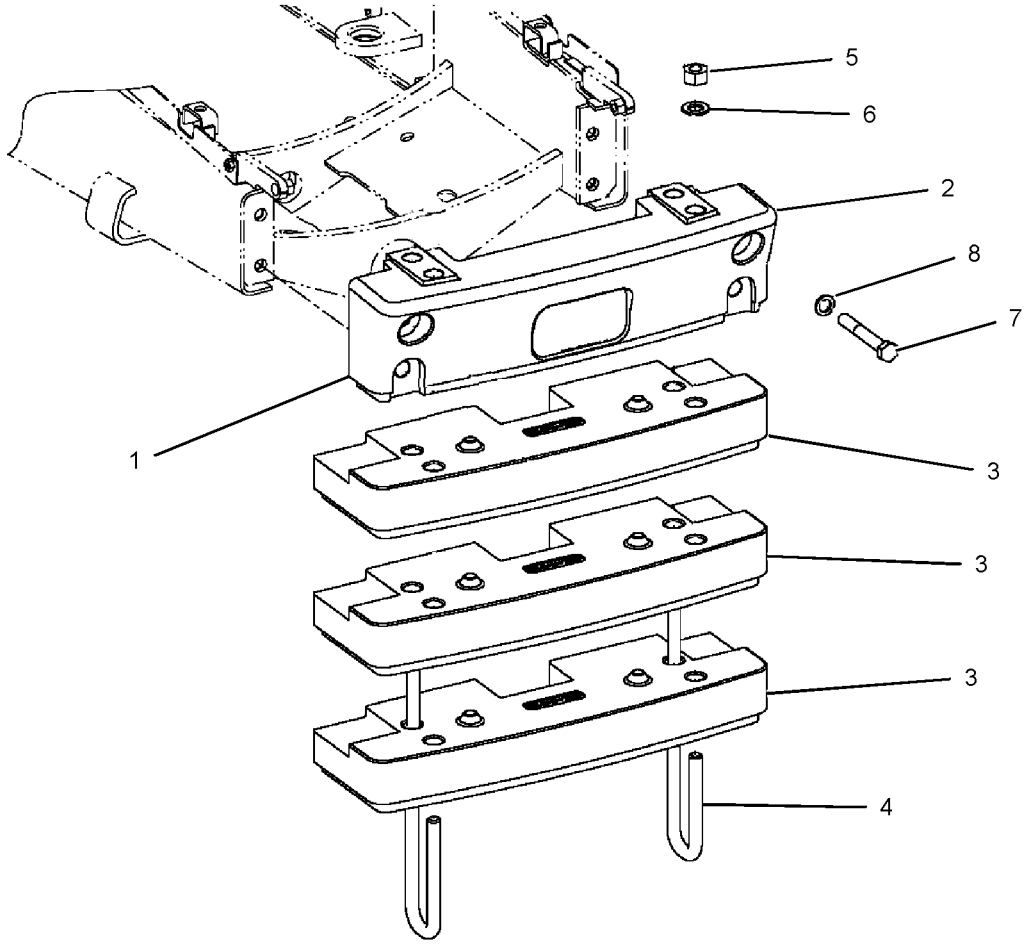


GRAPHIC #1 **<END>** g01032615

# FRAME AND BODY

## *118-6842* DOOR GP-BATTERY

**S/N: BXC1-UP; DSX1-UP**
**PART OF 188-0859, 188-0860 BOX GP-BATTERY**
**AN ATTACHMENT**

**SMCS-7273** **i01399418**

| NOTE | REF NO | GRAPHIC REF | PART NUMBER | QTY | PART NAME 1 2 3 4 5 6 (PRODUCT LEVEL) | SEE PAGE |
|---|---|---|---|---|---|---|
| | 1 | 1 | **8C-8522** | 1 | PAWL-LATCH | |
| | 2 | 1 | **129-4741** | 1 | LATCH AS-T-BAR | |
| | 3 | 1 | **151-2963** | 1 | DOOR AS | |
| M | 4 | 1 | **6V-7743** | 2 | LOCKNUT (M6X1 THD) | |
| M | 5 | 1 | **8T-4133** | 2 | NUT (M10X1.5 THD) | |
| | 6 | 1 | **8T-4205** | 2 | WASHER-HARD (7.2X14.5X2MM THK) | |

M-METRIC PART

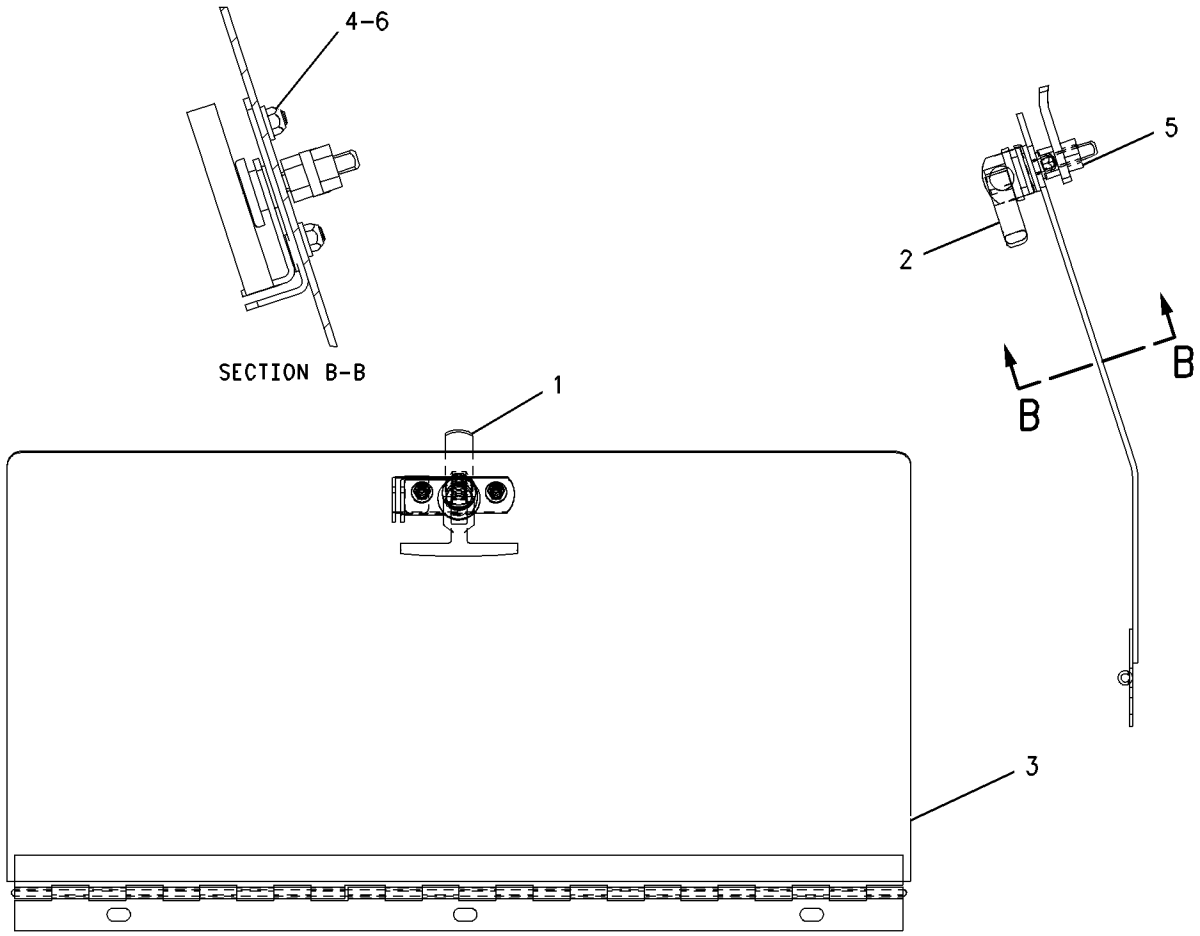


GRAPHIC #1 **<END>** g00739059

# FRAME AND BODY

## *162-3996* FENDER GP-FRONT

**S/N: BXC1-UP; DSX1-UP**
**AN ATTACHMENT**

**SMCS-7252** **i02000024**

| NOTE | REF NO | GRAPHIC REF | PART NUMBER | QTY | PART NAME 1 2 3 4 5 6 (PRODUCT LEVEL) | SEE PAGE |
|---|---|---|---|---|---|---|
| | 1 | 1 | **162-3998** | 1 | FENDER AS (LH) | |
| | 2 | 1 | **162-3999** | 1 | FENDER AS (RH) | |
| | 3 | 1 | **162-4004** | 2 | FENDER | |
| M | 4 | 1 | **6V-7744** | 4 | LOCKNUT (M10X1.5 THD) | |
| | 5 | 1 | **8T-4121** | 4 | WASHER-HARD (11X21X2.5MM THK) | |
| | 6 | 1 | **8T-4122** | 4 | WASHER-HARD (17X32X3.5MM THK) | |
| M | 7 | 1 | **8T-4195** | 4 | BOLT (M10X1.5X30MM) | |
| | 8 | 1 | **8T-4222** | 4 | WASHER-PLATED (11X32X2.5MM THK) | |
| M | 9 | 1 | **8T-4779** | 4 | BOLT (M16X2X35MM) | |

M-METRIC PART

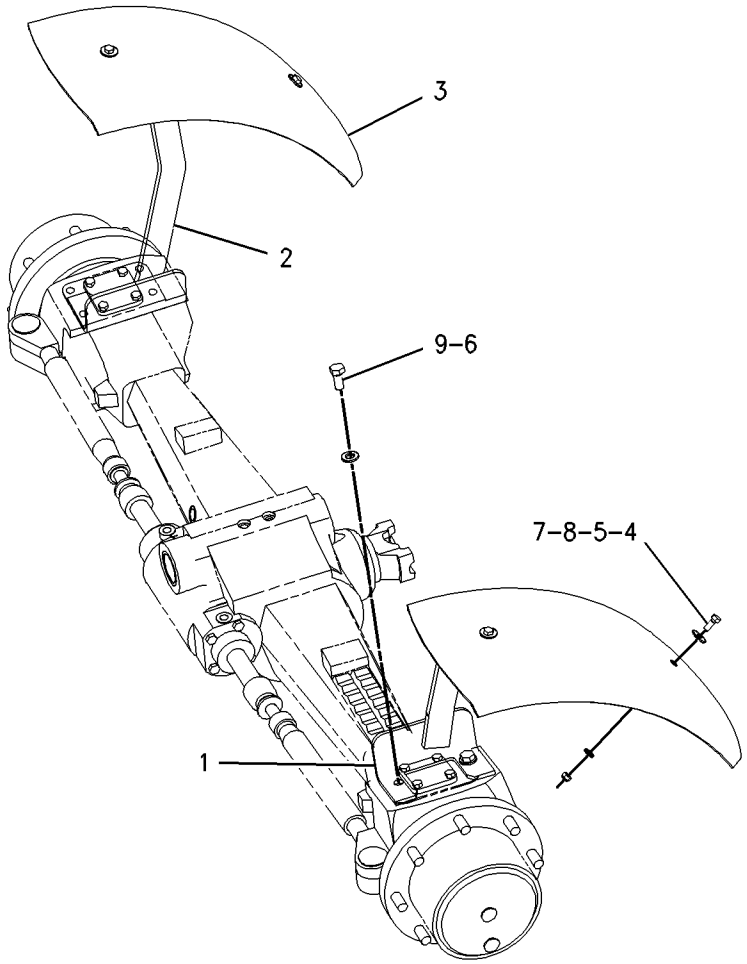


GRAPHIC #1 **<END>** g00770856

# FRAME AND BODY

## *201-3954* FENDER GP-FRONT

**S/N: BXC1-UP; DSX1-UP**

**AN ATTACHMENT**

**SMCS-7252** **i01983299**

| NOTE | REF NO | GRAPHIC REF | PART NUMBER | QTY | PART NAME 1 2 3 4 5 6 (PRODUCT LEVEL) | SEE PAGE |
|---|---|---|---|---|---|---|
| | 1 | 1 | **162-4004** | 2 | FENDER (FRONT) | |
| M | 2 | 1 | **199-0783** | 4 | BOLT (M16X2X38MM) | |
| | 3 | 1 | **222-1801** | 1 | BRACKET AS (LH) | |
| | 4 | 1 | **222-1802** | 1 | BRACKET AS (RH) | |
| M | 5 | 1 | **6V-7744** | 4 | LOCKNUT (M10X1.5 THD) | |
| | 6 | 1 | **8T-4121** | 4 | WASHER-HARD (11X21X2.5MM THK) | |
| | 7 | 1 | **8T-4122** | 12 | WASHER-HARD (17X32X3.5MM THK) | |
| M | 8 | 1 | **8T-4195** | 4 | BOLT (M10X1.5X30MM) | |
| | 9 | 1 | **8T-4222** | 4 | WASHER-PLATED (11X32X2.5MM THK) | |
| M | 10 | 1 | **8T-4778** | 4 | LOCKNUT (M16X2 THD) | |

M-METRIC PART

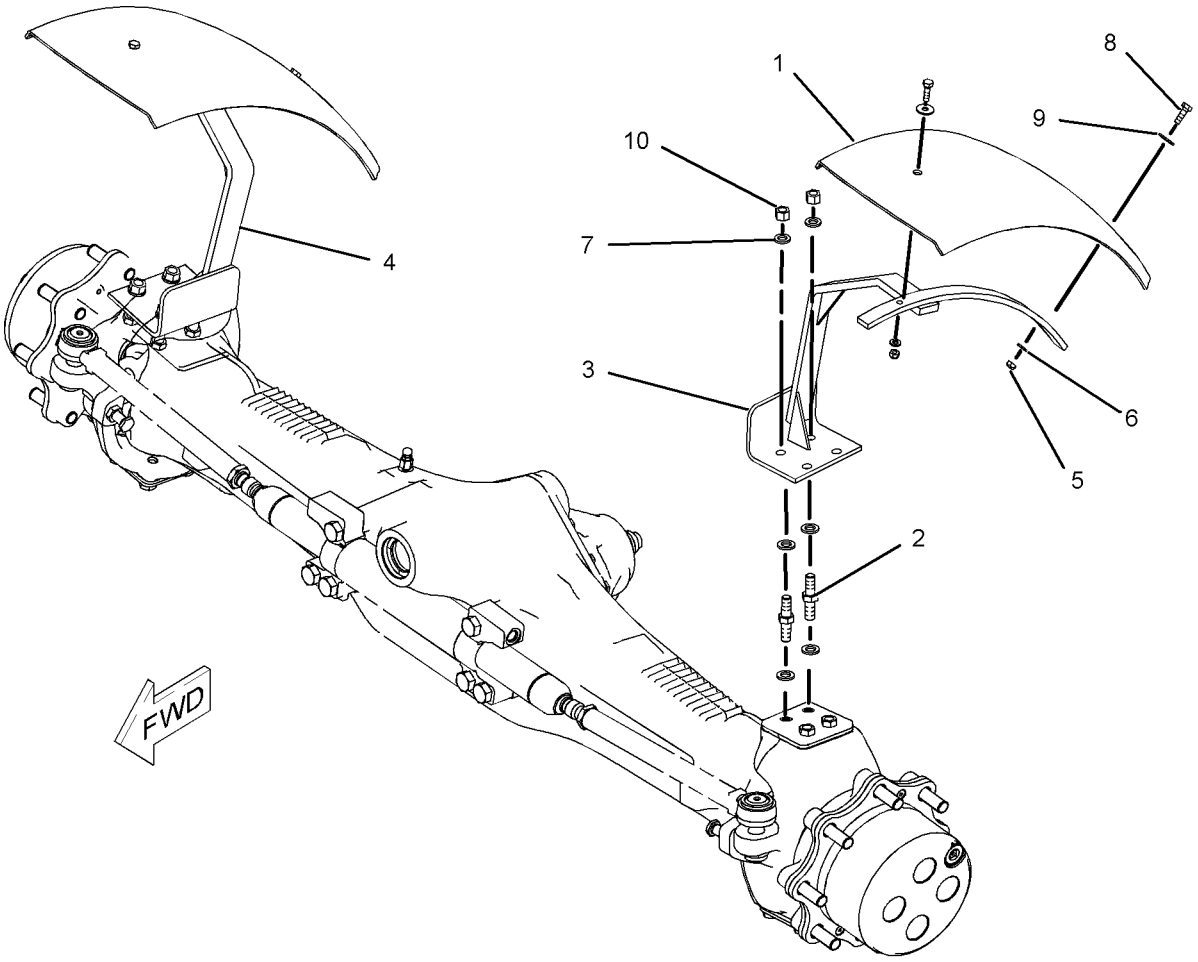


GRAPHIC #1 **<END>** g01027709

# FRAME AND BODY

## *164-1149* FENDER GP-REAR

**S/N: BXC1-UP; DSX1-UP**
**PART OF 214-7006, 214-7007 CAB AR, 214-7008, 214-7009 CAB AR-ENCLOSED ROPS, 214-7004 CANOPY AR**
**AN ATTACHMENT**

**SMCS-7252** **i01354034**

| NOTE | REF NO | GRAPHIC REF | PART NUMBER | QTY | PART NAME 1 2 3 4 5 6 (PRODUCT LEVEL) | SEE PAGE |
|---|---|---|---|---|---|---|
| | 1 | 1 | **156-0283** | 14 | WASHER-HARD (2.5MM THK) | |
| | 2 | 1 | **167-8285** | 1 | FENDER-RH | |
| | 3 | 1 | **167-8286** | 1 | FENDER-LH | |
| M | 4 | 1 | **8T-4189** | 14 | BOLT (M8X1.25X20MM) | |

M-METRIC PART

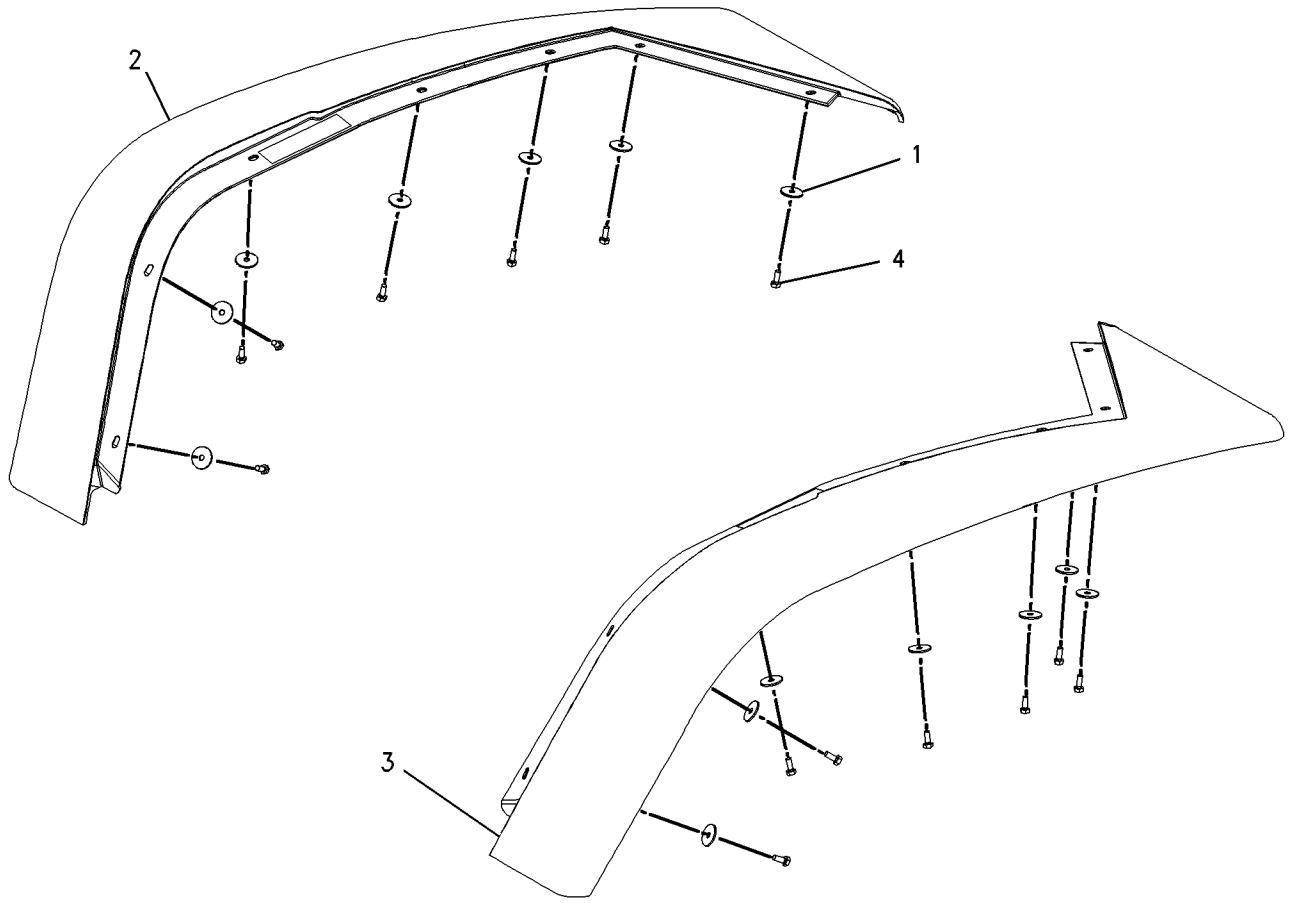


GRAPHIC #1 **<END>** g00714945

# FRAME AND BODY

## *185-0080* FLOORPLATE GP

**S/N: BXC1-UP; DSX1-UP**

**PART OF 237-9288, 237-9289 CHASSIS AR**

**SMCS-7265** **i01771942**

| NOTE | REF NO | GRAPHIC REF | PART NUMBER | QTY | PART NAME 1 2 3 4 5 6 (PRODUCT LEVEL) | SEE PAGE |
|---|---|---|---|---|---|---|
| B | 1 | 1 | **9R-0393** | 6 | SHIM (1.6 MM THK) | |
| | 2 | 1 | **9R-0394** | 2 | MOUNT AS | |
| | 3 | 1 | **118-2990** | 2 | MOUNT AS | |
| | 4 | 1 | **164-1102** | 1 | PLATE AS | |
| | 5 | 1 | **164-1103** | 1 | PLATE | |
| | 6 | 1 | **184-6436** | 1 | PLATE | |
| | 7 | 1 | **201-4822** | 1 | PLATE AS | |
| | 8 | 1 | **1L-6377** | 2 | BUTTON-PLUG | |
| | 9 | 1 | **8C-3291** | 4 | WASHER (M17X90X10MM THK) | |
| | 10 | 1 | **8M-2770** | 1 | CLIP | |
| M | 11 | 1 | **8T-4001** | 2 | NUT (M24X3 THD) | |
| | 12 | 1 | **8T-4121** | 1 | WASHER-HARD (11X21X2.5MM THK) | |
| | 13 | 1 | **8T-4122** | 2 | WASHER-HARD (17X32X3.5MM THK) | |
| M | 14 | 1 | **8T-4132** | 2 | NUT (M16X2 THD) | |
| M | 15 | 1 | **8T-4137** | 1 | BOLT (M10X1.5X20MM) | |
| | 16 | 1 | **8T-4167** | 2 | WASHER-HARD (26X44X4MM THK) | |
| M | 17 | 1 | **8T-4174** | 2 | BOLT (M16X2.0X120MM) | |
| M | 18 | 1 | **8T-4649** | 2 | BOLT (M24X3X140MM) | |
| | 19 | 1 | **9R-9869** | 4 | WASHER-HARD (M26X120X10MM THK) | |
| M | 20 | 1 | **9X-2042** | 11 | SCREW-TRUSS HEAD (M6X1X12MM) | |

B-USE AS REQUIRED
M-METRIC PART

*185-0080* **FLOORPLATE GP** *(contd.)* **i01771942**

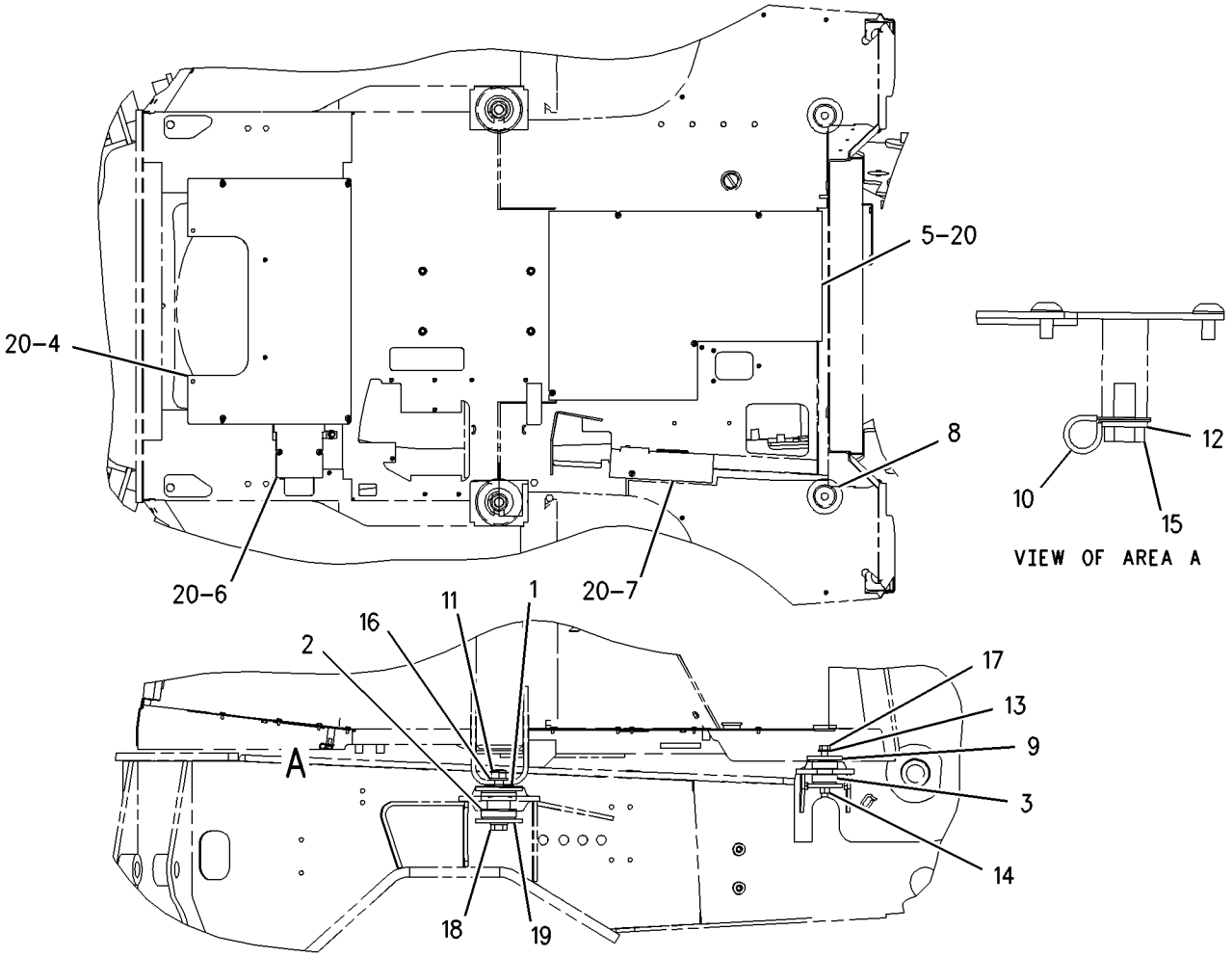


GRAPHIC #1 **<END>** g00809282

# FRAME AND BODY

## *236-2070* FRAME GP-LOADER—PARALLEL LIFT

**S/N: BXC1-UP**

**PART OF 237-9288 CHASSIS AR**

**SMCS-7054** **i01982422**

| NOTE | REF NO | GRAPHIC REF | PART NUMBER | QTY | PART NAME 1 2 3 4 5 6 (PRODUCT LEVEL) | SEE PAGE |
|---|---|---|---|---|---|---|
| | 1 | 1 | **126-5693** | 2 | TUBE AS | |
| | 2 | 1 | **126-5701** | 4 | PLATE-RETAINER | |
| B | 3 | 1 | **193-1681** | 6 | PAD | |
| B | 4 | 1 | **193-1683** | 1 | PAD | |
| B | 5 | 1 | **193-1684** | 1 | PAD | |
| B | 6 | 1 | **193-1685** | 2 | PAD | |
| B | 7 | 1 | **193-1686** | 1 | PAD | |
| B | 8 | 1 | **193-1687** | 1 | PAD | |
| B | 9 | 1 | **193-1688** | 4 | PAD | |
| B | 10 | 1 | **193-1689** | 2 | PAD | |
| | 11 | 1 | **236-2064** | 1 | FRAME AS | |
| M | 12 | 1 | **8T-4191** | 8 | BOLT (M10X1.5X16MM) | |

B-USE AS REQUIRED
M-METRIC PART

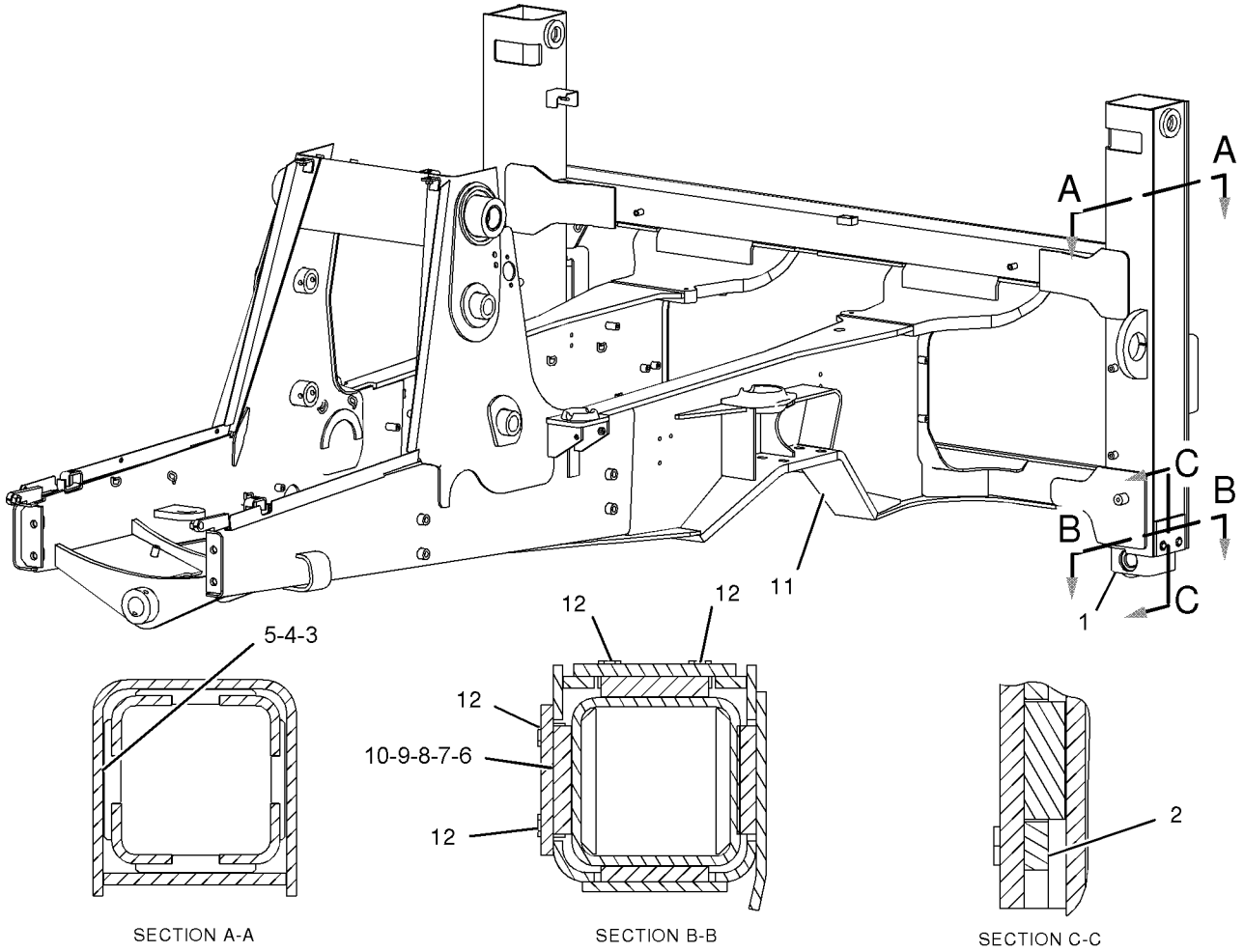


GRAPHIC #1 **<END>** g01033245

# FRAME AND BODY

## *236-2072* FRAME GP-LOADER—NARROW—PARALLEL LIFT

**S/N: DSX1-UP**

**PART OF 237-9289 CHASSIS AR**

**SMCS-7054** **i02005262**

| NOTE | REF NO | GRAPHIC REF | PART NUMBER | QTY | PART NAME 1 2 3 4 5 6 (PRODUCT LEVEL) | SEE PAGE |
|---|---|---|---|---|---|---|
| M | 1 | 1 | **8T-4191** | 8 | BOLT (M10X1.5X16MM) | |
| | 2 | 1 | **126-5701** | 4 | PLATE-RETAINER | |
| B | 3 | 1 | **193-1681** | 6 | PAD | |
| B | 4 | 1 | **193-1683** | 1 | PAD | |
| B | 5 | 1 | **193-1684** | 1 | PAD | |
| B | 6 | 1 | **193-1685** | 2 | PAD | |
| B | 7 | 1 | **193-1686** | 1 | PAD | |
| B | 8 | 1 | **193-1687** | 1 | PAD | |
| B | 9 | 1 | **193-1688** | 4 | PAD | |
| B | 10 | 1 | **193-1689** | 2 | PAD | |
| | 11 | 1 | **236-2066** | 1 | FRAME AS | |

B-USE AS REQUIRED
M-METRIC PART

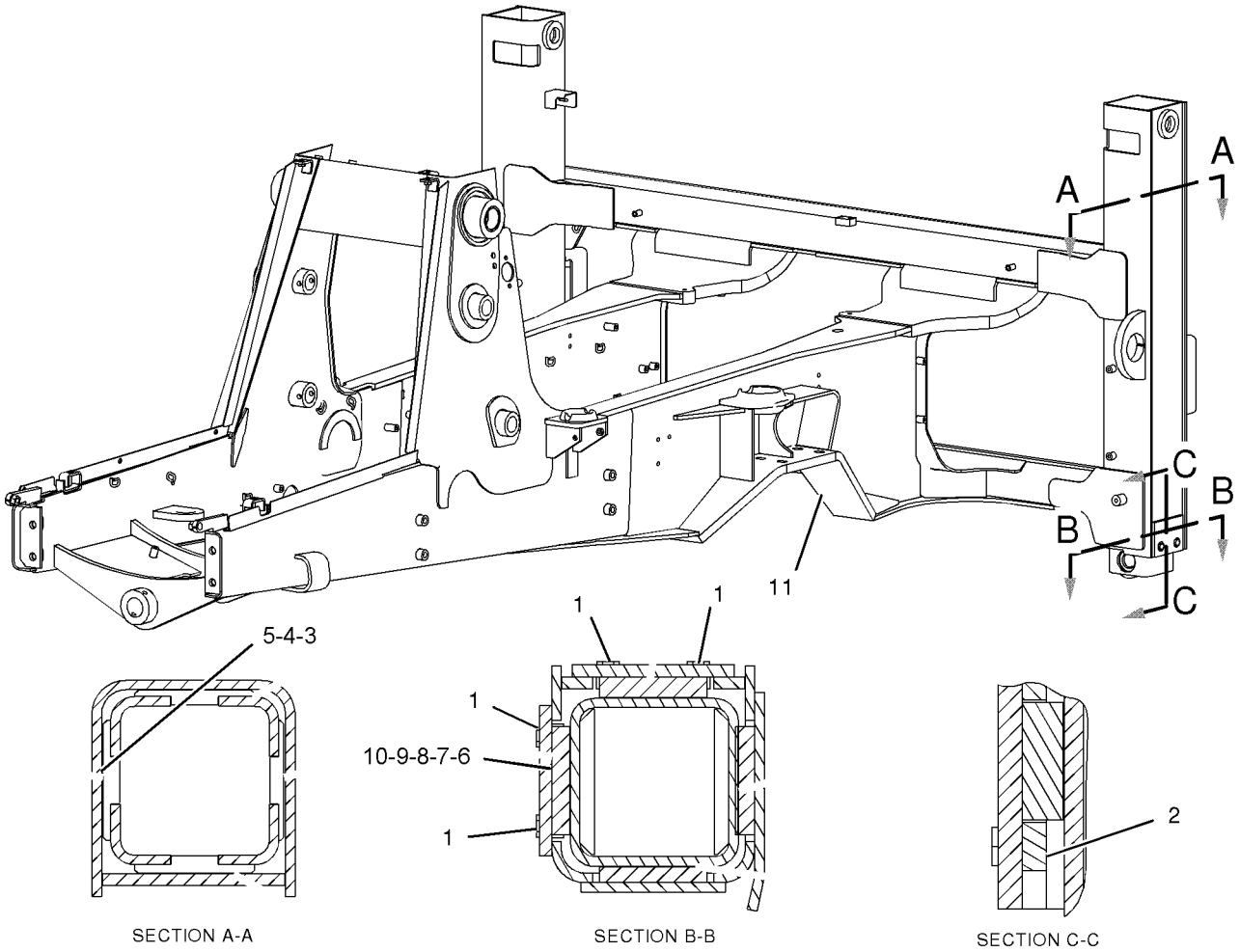


GRAPHIC #1 **<END>** g01037165

# FRAME AND BODY

## *185-8857* FRAME GP-SLIDING

**S/N: BXC1-UP; DSX1-UP**

**PART OF 237-9288, 237-9289 CHASSIS AR**

**SMCS-5804, 6508** **i01711741**

| NOTE | REF NO | GRAPHIC REF | PART NUMBER | QTY | PART NAME 1 2 3 4 5 6 (PRODUCT LEVEL) | SEE PAGE |
|---|---|---|---|---|---|---|
| | 1 | 1 | **3B-8488** | 2 | FITTING-GREASE (1/8-27 THD) | |
| | 2 | 1 | **3B-8489** | 2 | FITTING-GREASE (1/8-27 THD) | |
| | 3 | 1 | **9R-0481** | 2 | WASHER | |
| | 4 | 1 | **9R-5386** | 4 | CYLINDER | |
| | 5 | 1 | **9R-5387** | 4 | PISTON | |
| | 6 | 1 | **9R-7092** | 2 | BAR | |
| | 7 | 1 | **9R-7701** | 1 | CAP AS | |
| | | 1 | **9R-4110** | 2 | BEARING-SLEEVE | |
| | 8 | 1 | **201-0582** | 1 | FRAME AS | |
| | | 1 | **9C-8895** | 3 | BOSS | |
| | 8A | 1 | **9R-0366** | 1 | WASHER (5MM THK) | |
| | 8B | 1 | **9R-0413** | 1 | BEARING | |
| | 8C | 1 | **9R-4110** | 2 | BEARING-SLEEVE | |
| | 8D | 1 | **102-4560** | 1 | BEARING-SLEEVE | |
| | 9 | 1 | **209-6188** | 4 | PLATE | |
| | 10 | 1 | **030-3239** | 4 | RING-BACKUP | |
| M | 11 | 1 | **114-6099** | 6 | BOLT-HEX HEAD | |
| | 12 | 1 | **7K-9205** | 4 | SEAL-LIP | |
| M | 13 | 1 | **7X-2465** | 6 | BOLT (M24X3.0X180MM) | |
| | 14 | 1 | **8F-6711** | 4 | SEAL-O-RING | |
| M | 15 | 1 | **8T-4001** | 6 | NUT (M24X3 THD) | |
| | 16 | 1 | **8T-4167** | 12 | WASHER-HARD (26X44X4MM THK) | |

M-METRIC PART

*185-8857* **FRAME GP-SLIDING** *(contd.)* **i01711741**

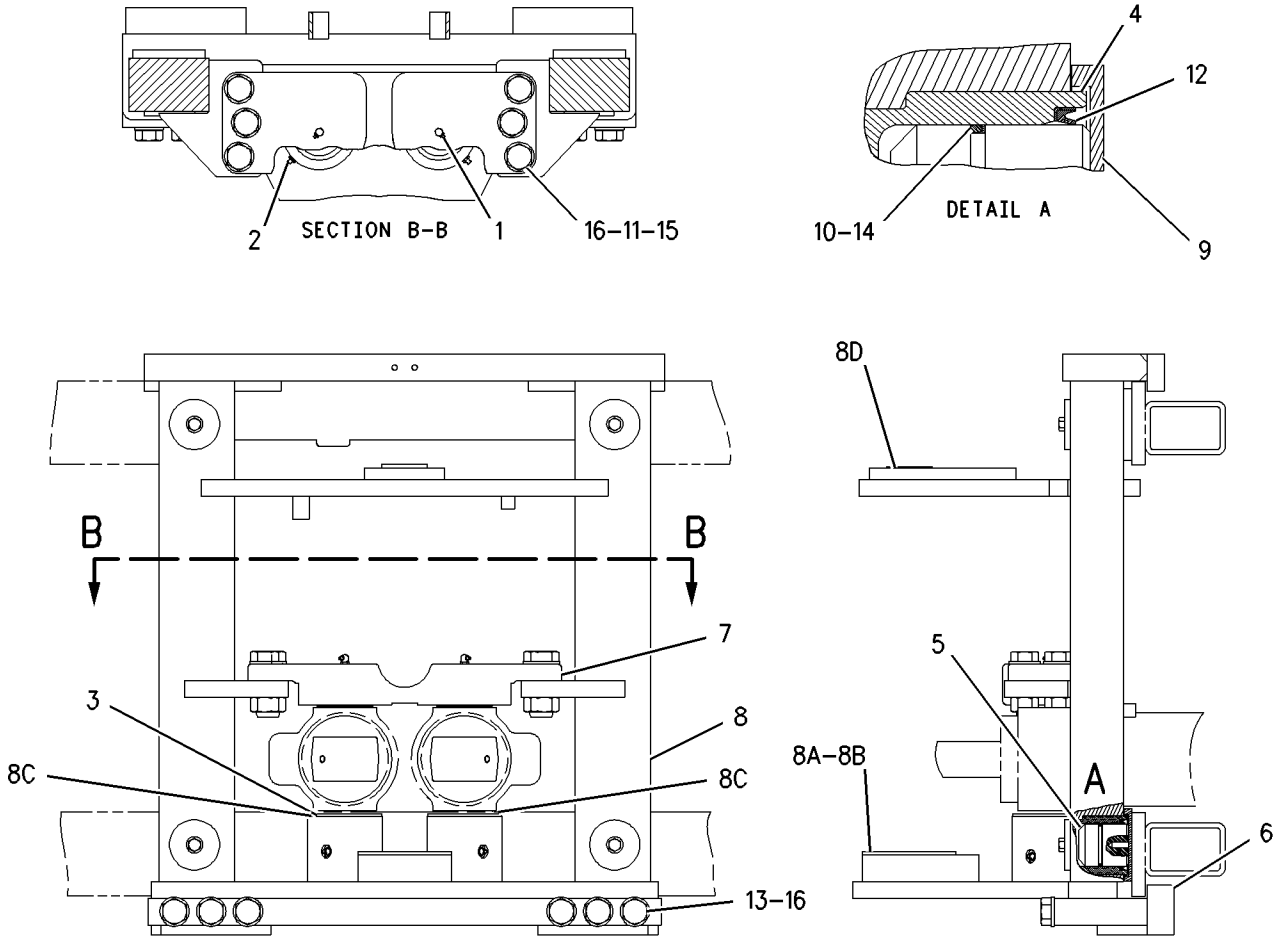


GRAPHIC #1 **<END>** g00880837

# FRAME AND BODY

## *183-6058* FRAME GP-SWING

**S/N: BXC1-UP; DSX1-UP**

**PART OF 240-8683, 240-8684, 240-8687, 240-8688, 240-8693, 240-8694, 240-8697, 240-8698 BACKHOE AR-STANDARD STICK AN ATTACHMENT**

**SMCS-6506** **i01985184**

| NOTE | REF NO | GRAPHIC REF | PART NUMBER | QTY | PART NAME 1 2 3 4 5 6 (PRODUCT LEVEL) | SEE PAGE |
|---|---|---|---|---|---|---|
| | 1 | 2 | **5P-7958** | 1 | SLEEVE-CABLE SPLICE | |
| | 2 | 2 | **6K-0806** | 1 | STRAP-CABLE | |
| | 3 | 2 | **8T-4837** | 1 | WASHER (48X85X6MM THK) | |
| | 4 | 1 | **8Y-7203** | 1 | WEDGE | |
| | 5 | 1 | **8Y-7204** | 1 | WEDGE | |
| | 6 | 2 | **130-0484** | 1 | PIN | |
| B | 7 | 2 | **9R-5429** | 2 | SPACER (67.5X120X3MM THK) | |
| B | 8 | 2 | **9R-5437** | 4 | WASHER (56X90X.5MM THK) | |
| | 9 | 1 | **236-6954** | 1 | FRAME AS | |
| | | 1 | **9R-0366** | 1 | WASHER (80X140X5MM THK) | |
| | 10 | 1,2 | **9R-7882** | 2 | SPACER (14X25X7MM THK) | |
| B | 11 | 2 | **9R-8291** | 2 | SPACER (66X125X1MM THK) | |
| | 12 | 1 | **9R-8594** | 1 | PIN AS | |
| | 13 | 2 | **9R-8599** | 1 | PLATE | |
| | 14 | 2 | **9R-8760** | 2 | PLATE | |
| | 15 | 1 | **101-4015** | 1 | BRACKET | |
| | 16 | 2 | **101-4016** | 1 | PLATE AS | |
| | 17 | 1 | **101-4020** | 1 | PIN AS | |
| | 18 | 2 | **159-0960** | 1 | PIN AS | |
| | 19 | 2 | **102-1940** | 1 | STOP | |
| | 20 | 2 | **237-5330** | 2 | PIN | |
| | 21 | 1 | **131-8775** | 1 | BRACKET AS | |
| | 22 | 2 | **134-0143** | 1 | CABLE | |
| | 23 | 1 | *142-6132* | 1 | ROD AS | |
| M | | 1 | **6V-7687** | 1 | LOCKNUT (M12X1.75THD) | |
| | | 1 | **123-7034** | 1 | ROD | |
| C | 24 | 1 | **237-0803** | 1 | SPRING | |
| B | 25 | 2 | **210-1706** | 1 | SHIM (0.5MM THK) | |
| B | 26 | 2 | **210-1707** | 1 | SHIM (1MM THK) | |
| | 27 | 1 | **222-0841** | 1 | CABLE AS | |
| | 28 | 1,2 | **3B-8489** | 6 | FITTING-GREASE | |
| | 29 | 2 | **4D-7794** | 3 | CLIP | |
| M | 30 | 1 | **6V-7687** | 3 | LOCKNUT (M12X1.75THD) | |
| | 31 | 1 | **7X-7729** | 2 | WASHER (11X25X3MM THK) | |
| M | 32 | 2 | **8T-3652** | 1 | NUT (M42X25THD) | |
| | 33 | 2 | **8T-4121** | 7 | WASHER-HARD (11X21X2.5MM THK) | |
| M | 34 | 2 | **8T-4133** | 2 | NUT (M10X1.5 THD) | |
| M | 35 | 1,2 | **8T-4136** | 5 | BOLT (M10X1.5X25MM) | |
| M | 36 | 1,2 | **8T-4139** | 2 | BOLT (M12X1.75X30MM) | |
| M | 37 | 2 | **8T-4195** | 2 | BOLT (M10X1.5X30MM) | |
| | 38 | 2 | **8T-4224** | 4 | WASHER-HARD (8.8X16X2MM THK) | |
| | 39 | 1,2 | **8T-4821** | 2 | WASHER (13.5X40X3MM THK) | |
| M | 40 | 2 | **8T-4908** | 4 | BOLT (M8X1.25X25MM) | |
| CM | 41 | 1 | **8T-5092** | 2 | BOLT (M12X1.75X150MM) | |
| M | 42 | 2 | **8T-8894** | 1 | BOLT-SOCKET HEAD (M10X1.5X20MM) | |

B-USE AS REQUIRED
C-CHANGE FROM PREVIOUS TYPE
M-METRIC PART

*183-6058* **FRAME GP-SWING** *(contd.)* **i01985184**

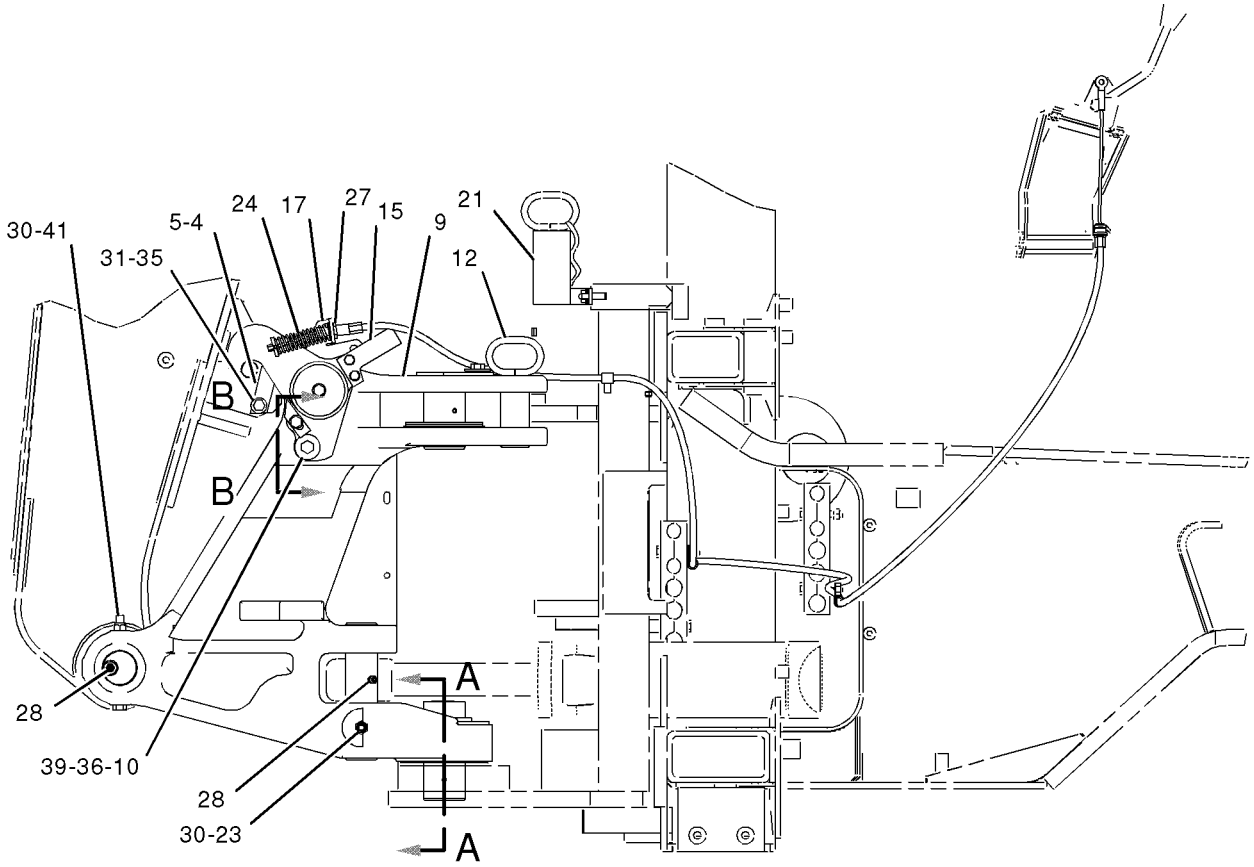


LEFT SIDE VIEW

GRAPHIC #1 g01030938

*183-6058* **FRAME GP-SWING** *(contd. )* **i01985184**

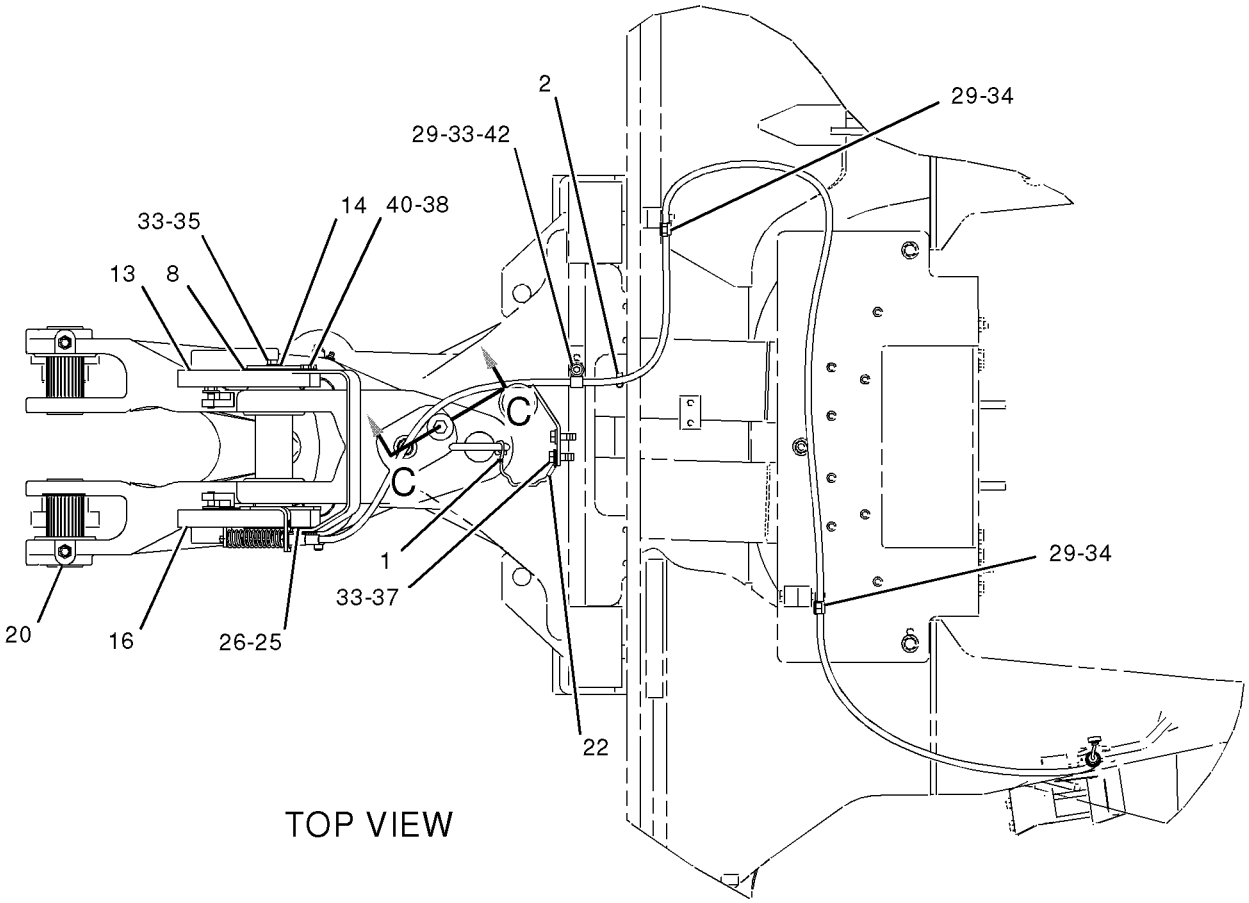


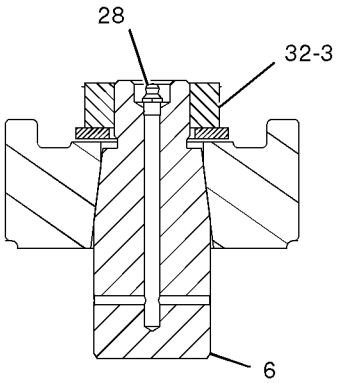


SECTION A-A

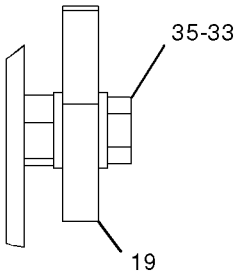


VIEW B-B

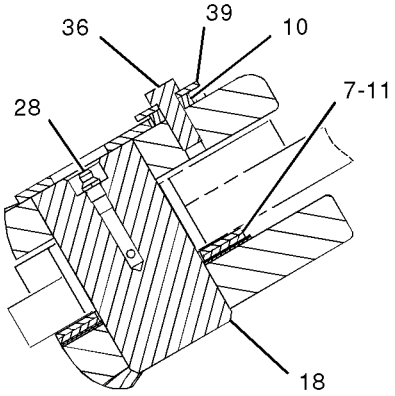


SECTION C-C

GRAPHIC #2 **<END>** g01031432

# FRAME AND BODY

## *183-6059* FRAME GP-SWING

**S/N: BXC1-UP; DSX1-UP**

**PART OF 240-8490, 240-8491, 240-8492, 240-8493, 240-8504, 240-8505, 240-8506, 240-8507, 240-8689, 240-8690, 240-8691, 240-8692, 240-8699, 240-8700, 240-8701, 240-8702 BACKHOE AR-EXTENDABLE STICK, 240-8685, 240-8686, 240-8695, 240-8696 BACKHOE AR-STANDARD STICK**

**AN ATTACHMENT**

**SMCS-6506** **i01985159**

| NOTE | REF NO | GRAPHIC REF | PART NUMBER | QTY | PART NAME 1 2 3 4 5 6 (PRODUCT LEVEL) | SEE PAGE |
|---|---|---|---|---|---|---|
| | 1 | 1 | **5P-7958** | 1 | SLEEVE-CABLE SPLICE | |
| | 2 | 1 | **6K-0806** | 1 | STRAP-CABLE | |
| | 3 | 1 | **8T-4837** | 1 | WASHER (48X85X6MM THK) | |
| | 4 | 1 | **8Y-7203** | 1 | WEDGE | |
| | 5 | 1 | **8Y-7204** | 1 | WEDGE | |
| | 6 | 1 | **130-0484** | 1 | PIN | |
| B | 7 | 1 | **9R-5429** | 2 | SPACER (67.5X120X3MM THK) | |
| B | 8 | 1 | **9R-5437** | 4 | WASHER (56X90X.5MM THK) | |
| | 9 | 1 | **236-6954** | 1 | FRAME AS | |
| | | 1 | **9R-0366** | 1 | WASHER (80X140X5MM THK) | |
| | 10 | 1 | **9R-7882** | 2 | SPACER (14X25X7MM THK) | |
| B | 11 | 1 | **9R-8291** | 2 | SPACER (66X125X1MM THK) | |
| | 12 | 1 | **9R-8594** | 1 | PIN AS | |
| | 13 | 1 | **9R-8599** | 1 | PLATE | |
| | 14 | 1 | **9R-8760** | 2 | PLATE | |
| | 15 | 1 | **101-4015** | 1 | BRACKET | |
| | 16 | 1 | **101-4016** | 1 | PLATE AS | |
| | 17 | 1 | **102-1940** | 1 | STOP | |
| | 18 | 1 | **107-6697** | 1 | PIN AS | |
| | 19 | 1 | **159-0959** | 1 | PIN AS | |
| | 20 | 1 | **237-5330** | 2 | PIN | |
| | 21 | 1 | **131-8775** | 1 | BRACKET AS | |
| | 22 | 1 | **134-0143** | 1 | CABLE | |
| | 23 | 1 | *142-6132* | 1 | ROD AS | |
| M | | 1 | **6V-7687** | 1 | LOCKNUT (M12X1.75THD) | |
| | | 1 | **123-7034** | 1 | ROD | |
| C | 24 | 1 | **237-0803** | 1 | SPRING | |
| B | 25 | 1 | **210-1706** | 1 | SHIM (0.5MM THK) | |
| B | 26 | 1 | **210-1707** | 1 | SHIM (1MM THK) | |
| | 27 | 1 | **222-0841** | 1 | CABLE AS | |
| | | 1 | **8U-6970** | 1 | RING-RETAINING | |
| | 28 | 1 | **3B-8489** | 6 | FITTING-GREASE | |
| | 29 | 1 | **4D-7794** | 3 | CLIP | |
| M | 30 | 1 | **6V-7687** | 3 | LOCKNUT (M12X1.75THD) | |
| | 31 | 1 | **7X-7729** | 2 | WASHER (11X25X3MM THK) | |
| M | 32 | 1 | **8T-3652** | 1 | NUT (M42X25THD) | |
| | 33 | 1 | **8T-4121** | 7 | WASHER-HARD (11X21X2.5MM THK) | |
| M | 34 | 1 | **8T-4133** | 2 | NUT (M10X1.5 THD) | |
| M | 35 | 1 | **8T-4136** | 5 | BOLT (M10X1.5X25MM) | |
| M | 36 | 1 | **8T-4139** | 2 | BOLT (M12X1.75X30MM) | |
| M | 37 | 1 | **8T-4195** | 2 | BOLT (M10X1.5X30MM) | |
| | 38 | 1 | **8T-4224** | 4 | WASHER-HARD (8.8X16X2MM THK) | |
| | 39 | 1 | **8T-4821** | 2 | WASHER (13.5X40X3MM THK) | |
| M | 40 | 1 | **8T-4908** | 4 | BOLT (M8X1.25X25MM) | |
| CM | 41 | 1 | **8T-5092** | 2 | BOLT (M12X1.75X150MM) | |
| M | 42 | 1 | **8T-8894** | 1 | BOLT-SOCKET HEAD (M10X1.5X20MM) | |

B-USE AS REQUIRED
C-CHANGE FROM PREVIOUS TYPE
M-METRIC PART

*183-6059* **FRAME GP-SWING** *(contd. )* **i01985159**

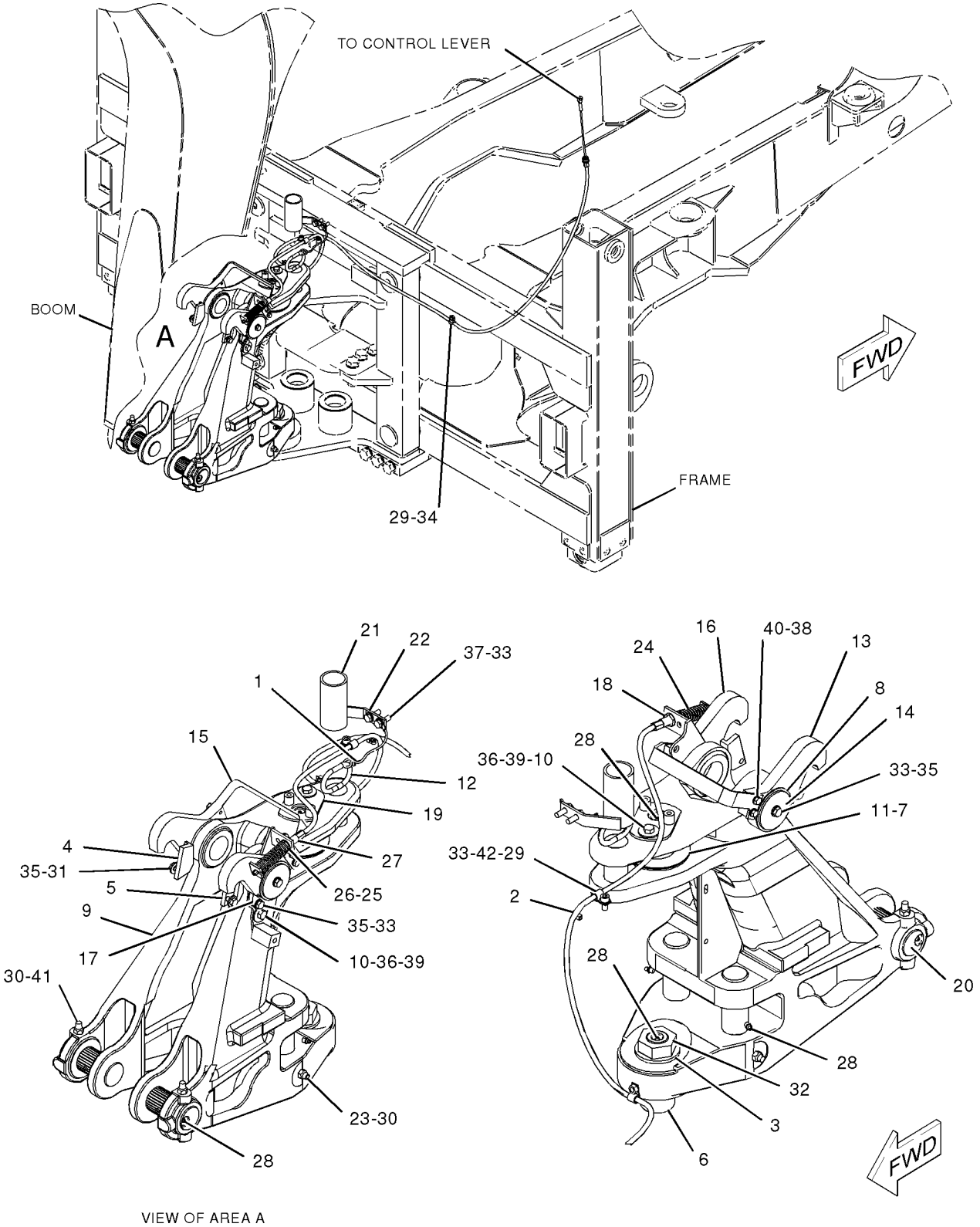


GRAPHIC #1 **<END>** g01030953

# *9R-1233* GUARD GP-DRIVE SHAFT—ALL WHEEL DRIVE—ALL WHEEL STEER

**S/N: BXC1-UP; DSX1-UP**

**AN ATTACHMENT**

**SMCS-7153** **i01811263**

| NOTE | REF NO | GRAPHIC REF | PART NUMBER | QTY | PART NAME 1 2 3 4 5 6 (PRODUCT LEVEL) | SEE PAGE |
|---|---|---|---|---|---|---|
| | 1 | 1 | **213-8481** | 1 | GUARD AS | |
| M | 2 | 1 | **8T-4183** | 4 | BOLT (M12X1.75X40MM) | |
| | 3 | 1 | **8T-4223** | 4 | WASHER-HARD (13.5X25.5X3MM THK) | |

M-METRIC PART

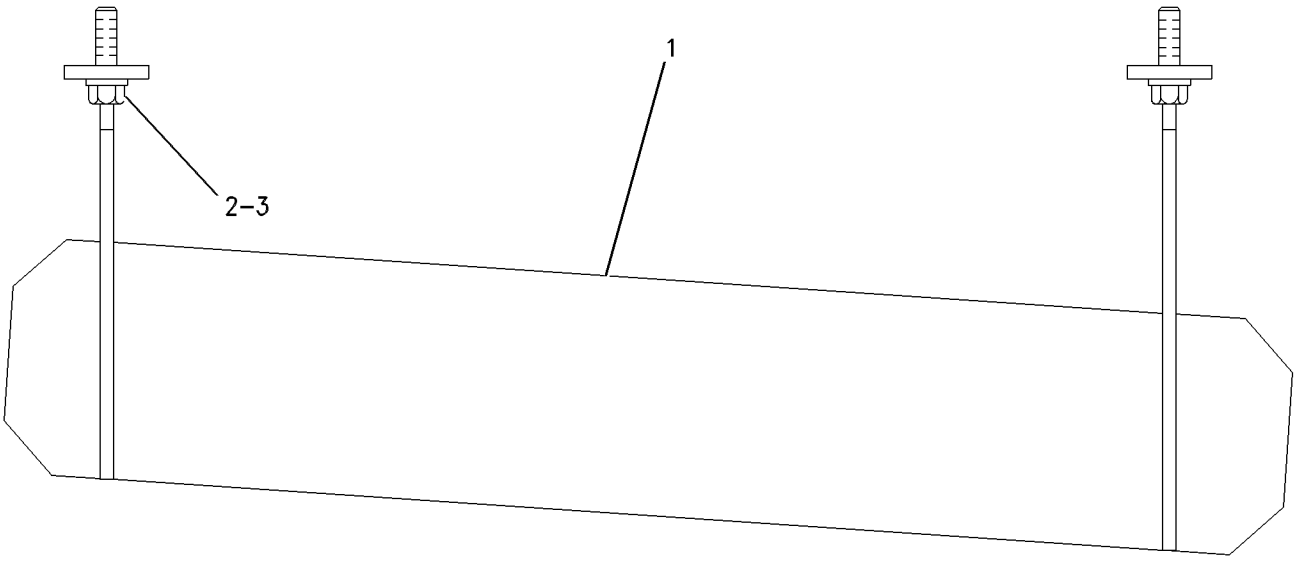


GRAPHIC #1 **<END>** g00287430

# FRAME AND BODY

## *113-0020* GUARD GP-LIGHTING

**S/N: BXC1-UP; DSX1-UP**
**PART OF 190-2803, 190-6413 CONVERSION AR-CERTIFICATION**
**AN ATTACHMENT**

**SMCS-1429, 7150** **i00534873**

| NOTE | REF NO | GRAPHIC REF | PART NUMBER | QTY | PART NAME 1 2 3 4 5 6 (PRODUCT LEVEL) | SEE PAGE |
|---|---|---|---|---|---|---|
| | 1 | 1 | **114-4917** | 4 | COVER AS-FRONT | |
| | 2 | 1 | **101-4416** | 4 | COVER-WORK LIGHT | |

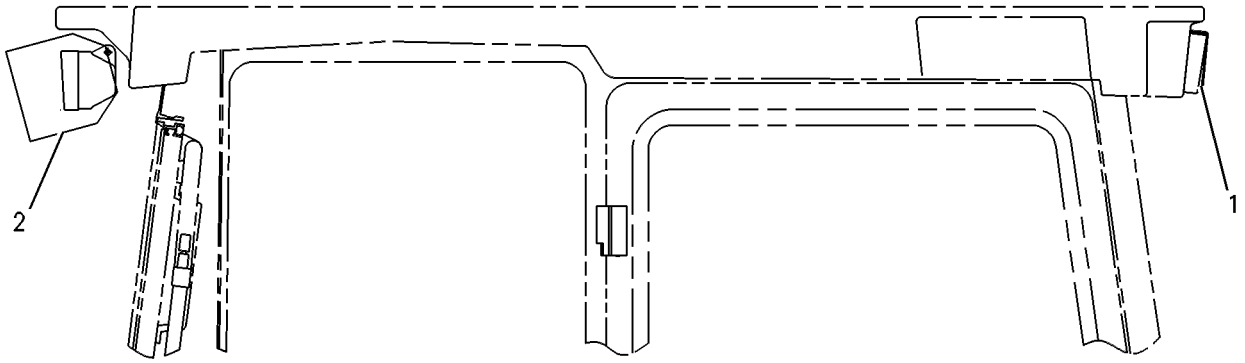


RIGHT SIDE VIEW

GRAPHIC #1 **<END>** g00258873

# FRAME AND BODY

## *137-1821* GUARD GP-LIGHTING—REAR

**S/N: BXC1-UP; DSX1-UP**

**AN ATTACHMENT**

**SMCS-1429, 7150** **i01395753**

| NOTE | REF NO | GRAPHIC REF | PART NUMBER | QTY | PART NAME 1 2 3 4 5 6 (PRODUCT LEVEL) | SEE PAGE |
|---|---|---|---|---|---|---|
| | 1 | 1 | **137-1822** | 2 | GUARD AS-REAR | |
| M | 2 | 1 | **8T-4138** | 4 | BOLT (M6X1.0X20MM) | |
| M | 3 | 1 | **5C-2890** | 4 | NUT (M6X1 THD) | |
| | 4 | 1 | **8T-4205** | 8 | WASHER-HARD (7.2X14.5X2MM THK) | |

M-METRIC PART

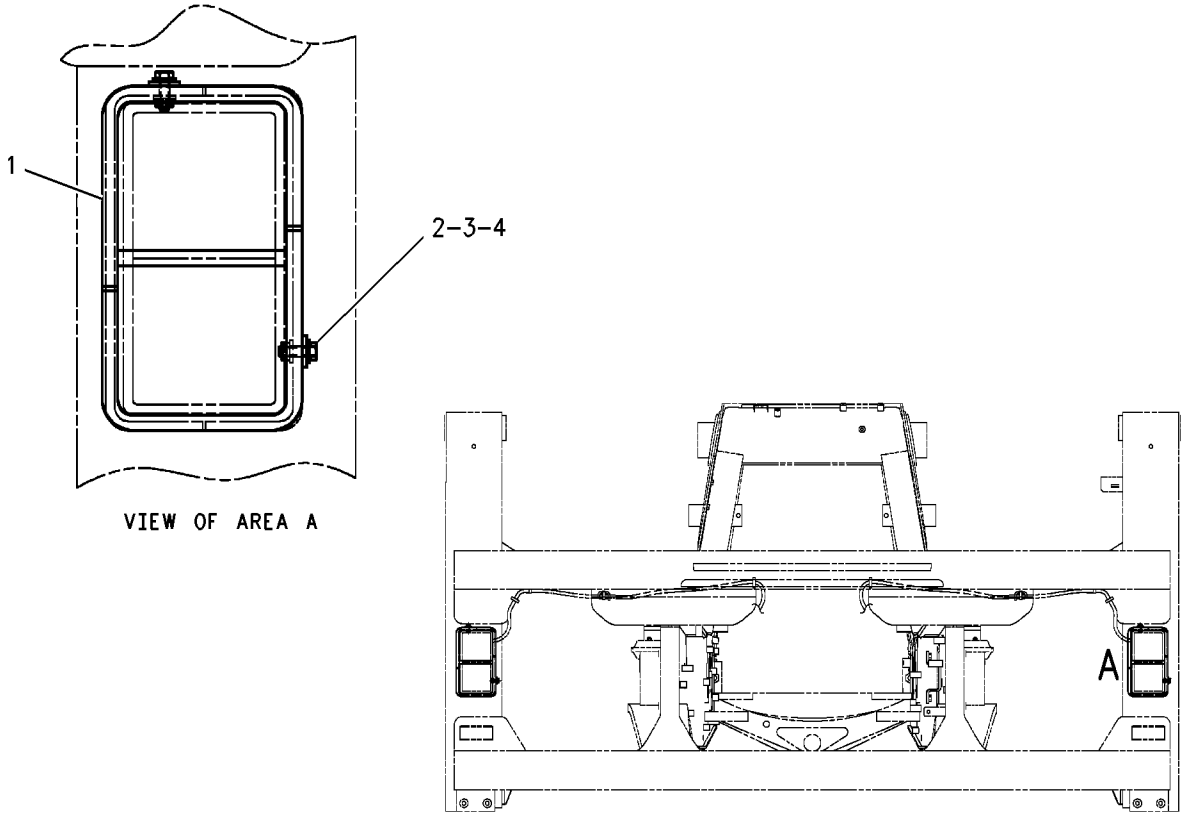


GRAPHIC #1 **<END>** g00736938

# FRAME AND BODY

## *9R-9999* GUARD GP-LINES

**S/N: BXC1-UP**

**PART OF 237-9288 CHASSIS AR**

**SMCS-7167** **i00529890**

| NOTE | REF NO | GRAPHIC REF | PART NUMBER | QTY | PART NAME 1 2 3 4 5 6 (PRODUCT LEVEL) | SEE PAGE |
|---|---|---|---|---|---|---|
| | 1 | 1 | **9R-9997** | 1 | GUARD-RH | |
| | 2 | 1 | **9R-9998** | 1 | GUARD-LH | |
| | 3 | 1 | **8T-4121** | 8 | WASHER (2.5MM THK) | |
| M | 4 | 1 | **8T-4137** | 8 | BOLT (M10X1.50X20MM) | |

M-METRIC PART

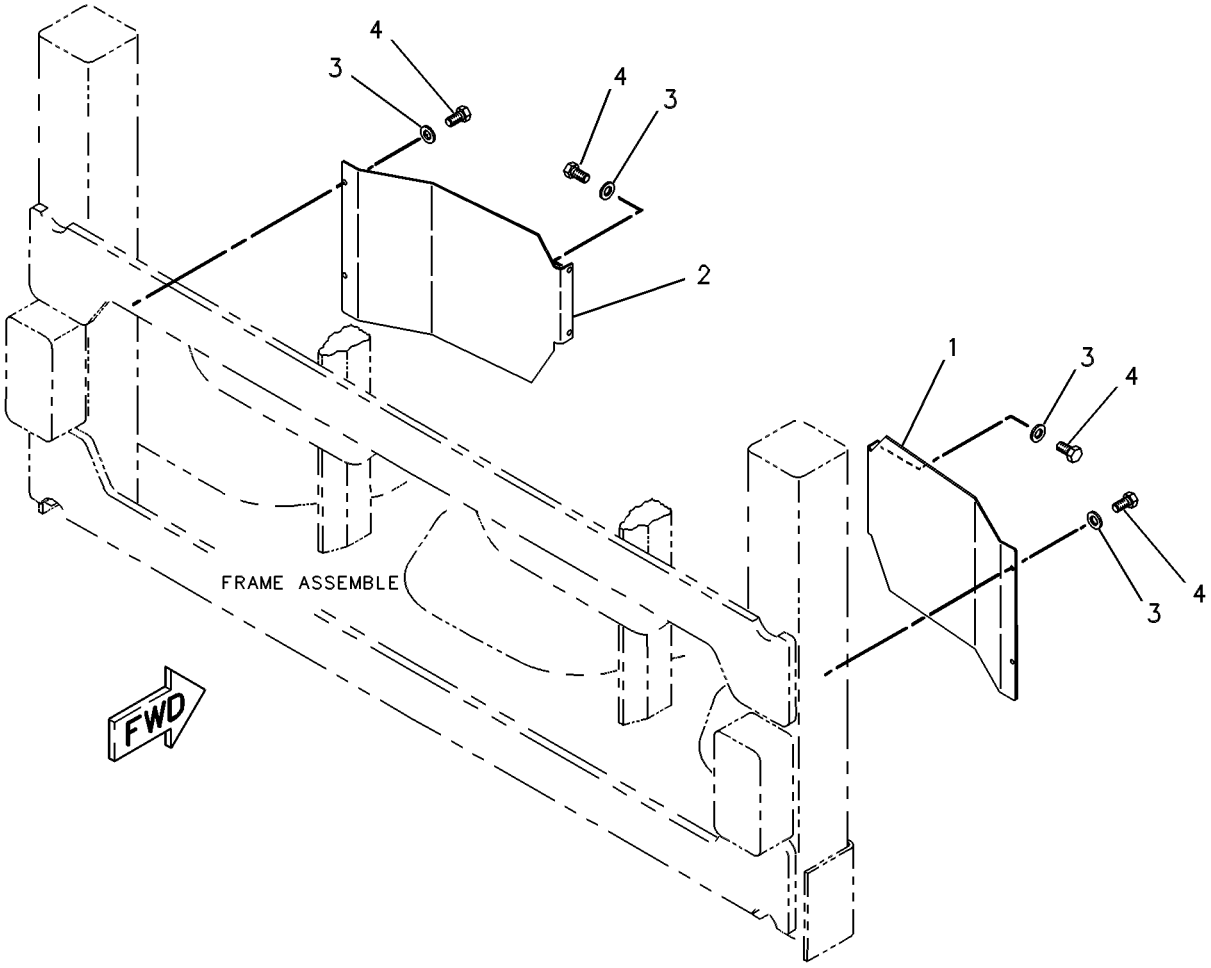


GRAPHIC #1 **<END>** g00257652

# FRAME AND BODY

## *183-1276* GUARD GP-LINES—NARROW FRAME

**S/N: DSX1-UP**

**PART OF 237-9289 CHASSIS AR**

**SMCS-7167** **i01371751**

| NOTE | REF NO | GRAPHIC REF | PART NUMBER | QTY | PART NAME 1 2 3 4 5 6 (PRODUCT LEVEL) | SEE PAGE |
|---|---|---|---|---|---|---|
| | 1 | 1 | **183-1277** | 1 | GUARD-LH | |
| | 2 | 1 | **183-1278** | 1 | GUARD-RH | |
| | 3 | 1 | **8T-4121** | 8 | WASHER-HARD (11X21X2.5MM THK) | |
| M | 4 | 1 | **8T-4137** | 8 | BOLT (M10X1.5X20MM) | |

M-METRIC PART

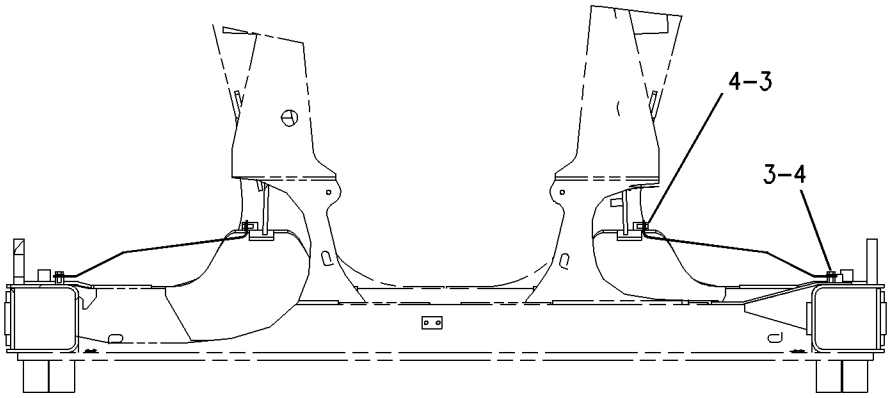


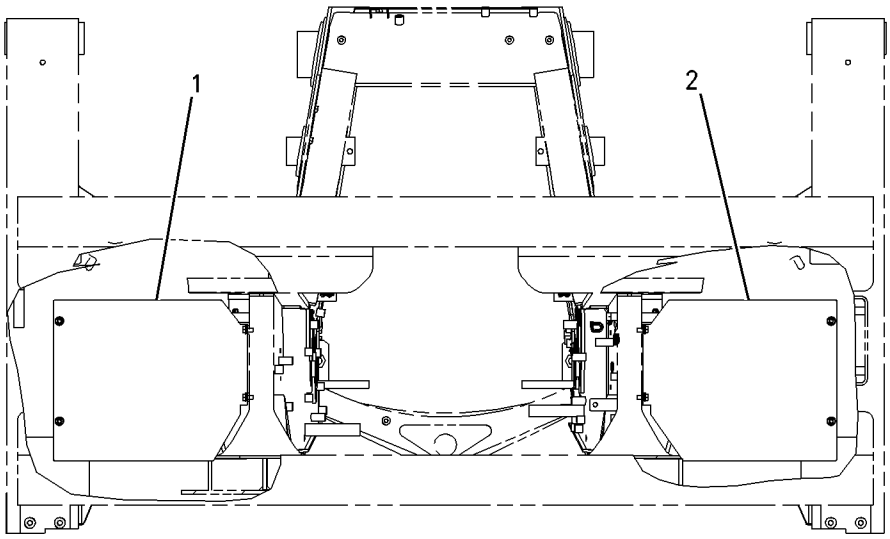


GRAPHIC #1 **<END>** g00726113

# FRAME AND BODY

## *241-3406* HOOD & GUARD GP

**S/N: BXC1-UP; DSX1-UP**

**PART OF 237-9288, 237-9289 CHASSIS AR**

**SMCS-7150, 7251** **i01994314**

| NOTE | REF NO | GRAPHIC REF | PART NUMBER | QTY | PART NAME 1 2 3 4 5 6 (PRODUCT LEVEL) | SEE PAGE |
|---|---|---|---|---|---|---|
| | 1 | 1 | **112-4415** | 2 | BUMPER AS | |
| | 2 | 1 | **112-4416** | 1 | GUARD AS | |
| M | | 1 | **6V-9632** | 1 | NUT-WELD (M6X1 THD) | |
| M | | 1 | **8T-3490** | 1 | NUT-WELD (M10X1.5 THD) | |
| M | | 1 | **8T-3612** | 6 | NUT-WELD (M8X1.25 THD) | |
| | 3 | 1 | **123-0428** | 2 | BAR | |
| | 4 | 1 | **123-4065** | 6 | RIVET-POP | |
| | 5 | 1 | **141-7514** | 2 | BAFFLE | |
| | 6 | 1 | **145-4476** | 1 | ENCLOSURE GP (RH) | |
| | 7 | 1 | **188-0862** | 1 | GRILL AS | |
| | 8 | 1 | **188-0865** | 1 | BAFFLE | |
| | 9 | 1 | **234-9066** | 1 | ENCLOSURE GP-ENGINE | |
| Y | 10 | 1 | *240-3478* | 1 | HOOD GP-ENGINE | 338 |
| | 11 | 1 | **5P-4115** | 1 | WASHER-HARD (7.2X19X2MM THK) | |
| M | 12 | 1 | **7X-2554** | 2 | BOLT (M16X2X70MM) | |
| | 13 | 1 | **7X-7729** | 3 | WASHER (11X25X3MM THK) | |
| | 14 | 1 | **8T-4121** | 8 | WASHER-HARD (11X21X2.5MM THK) | |
| M | 15 | 1 | **8T-4133** | 1 | NUT (M10X1.5 THD) | |
| M | 16 | 1 | **8T-4136** | 2 | BOLT (M10X1.5X25MM) | |
| M | 17 | 1 | **8T-4137** | 6 | BOLT (M10X1.5X20MM) | |
| M | 18 | 1 | **8T-4138** | 1 | BOLT (M6X1X20MM) | |
| M | 19 | 1 | **8T-4182** | 2 | BOLT (M10X1.5X45MM) | |
| M | 20 | 1 | **8T-4191** | 3 | BOLT (M10X1.5X16MM) | |
| M | 21 | 1 | **8T-4196** | 2 | BOLT (M10X1.5X35MM) | |
| | 22 | 1 | **8T-4222** | 5 | WASHER-PLATED (11X32X2.5MM THK) | |
| | 23 | 1 | **8T-4224** | 6 | WASHER-HARD (8.8X16X2MM THK) | |
| M | 24 | 1 | **8T-7547** | 6 | BOLT (M8X1.25X30MM) | |
| | 25 | 1 | **9X-8257** | 2 | WASHER (17.5X30X3.5MM THK) | |
| | 26 | 1 | **179-5571** | | SEAL (61CM) | |
| | 27 | 1 | **3E-6600** | | SEAL (83CM) | |

M-METRIC PART
Y-SEPARATE ILLUSTRATION

*241-3406* **HOOD & GUARD GP** *(contd.)* **i01994314**

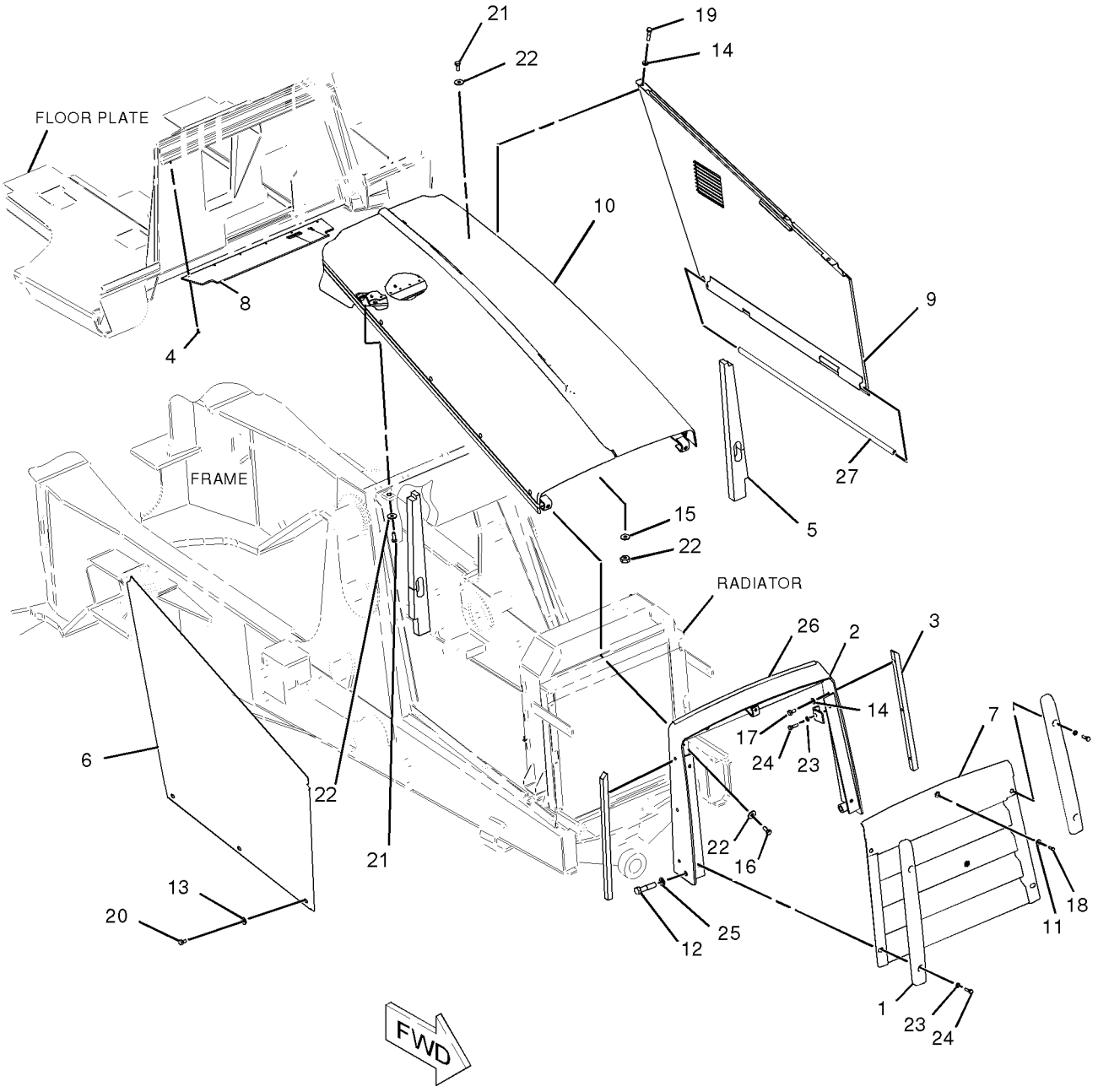


GRAPHIC #1 **<END>** g01033283

# FRAME AND BODY

## *240-3478* HOOD GP-ENGINE

**S/N: BXC1-UP; DSX1-UP**

**PART OF 241-3406 HOOD & GUARD GP**

**SMCS-7251** **i01990797**

| NOTE | REF NO | GRAPHIC REF | PART NUMBER | QTY | PART NAME 1 2 3 4 5 6 (PRODUCT LEVEL) | SEE PAGE |
|---|---|---|---|---|---|---|
| | 1 | 1 | **4V-5091** | 2 | GROMMET | |
| | 2 | 2 | **5D-4822** | 4 | RING-RETAINING | |
| | 3 | 1 | **5P-9000** | 1 | LOCK AS-CYLINDER | |
| | 4 | 2 | **114-8972** | 1 | HINGE AS | |
| | 5 | 1 | **122-5923** | 1 | BAFFLE | |
| | 6 | 1 | **123-4065** | 11 | RIVET-POP | |
| | 7 | 2 | **131-0827** | 1 | PLATE-LH | |
| | 8 | 2 | **131-0828** | 1 | PLATE-RH | |
| | 9 | 1 | **141-7515** | 1 | BAFFLE | |
| | 10 | 2 | **191-9110** | 1 | HOOD AS | |
| | 11 | 1 | **195-6523** | 1 | PLATE | |
| | 12 | 2 | **210-8922** | 1 | BLOCK | |
| | 13 | 2 | **221-0965** | 1 | HINGE AS | |
| | | 2 | **8T-6904** | 1 | PIN-CLEVIS | |
| | 14 | 2 | **221-0966** | 1 | LEVER AS | |
| | | 2 | **8T-6904** | 1 | PIN-CLEVIS | |
| | 15 | 2 | **221-0968** | 1 | HOOD AS | |
| | | 2 | **8T-9501** | 6 | SCREW (10-16X.75 IN) | |
| | 16 | 2 | **221-0972** | 1 | BLOCK | |
| | 17 | 1 | **221-0973** | 1 | LATCH | |
| | 18 | 2 | **221-0974** | 1 | HINGE AS | |
| | 19 | 1 | **221-0976** | 1 | PLATE | |
| | 20 | 2 | **221-8444** | 1 | HINGE AS | |
| | 21 | 2 | **224-8945** | 1 | FILM-WARNING (ETHER) | |
| | 22 | 2 | **238-4441** | 1 | FILM | |
| | 23 | 1 | **240-3479** | 1 | SUPPORT AS | |
| | | 1 | **7T-0525** | 2 | SHIM (3MM THK) | |
| M | | 1 | **8T-3490** | 5 | NUT-WELD (M10X1.5 THD) | |
| M | 24 | 1 | **099-3649** | 3 | BOLT (M8X1.25X40MM) | |
| | 25 | 1 | **139-3785** | 8 | RIVET-POP | |
| | 26 | 1 | **4B-4274** | 8 | WASHER (5.5X13X1.2MM THK) | |
| M | 27 | 1 | **5C-2890** | 2 | NUT (M6X1 THD) | |
| M | 28 | 2 | **5C-7261** | 2 | NUT (M8X1.25 THD) | |
| | 29 | 1 | **7X-0579** | 2 | WASHER-HARD (8.8X25.5X2MM THK) | |
| M | 30 | 1,2 | **8T-4189** | 10 | BOLT (M8X1.25X20MM) | |
| | 31 | 1,2 | **8T-4205** | 3 | WASHER-HARD (7.2X14.5X2MM THK) | |
| | 32 | 1,2 | **8T-4224** | 15 | WASHER-HARD (8.8X16X2MM THK) | |
| M | 33 | 2 | **8T-5091** | 2 | BOLT (M8X1.25X20MM) | |
| | 34 | 2 | **8T-6902** | 2 | CLIP | |
| M | 35 | 1 | **9X-2044** | 2 | SCREW-TRUSS HEAD (M6X1X16MM) | |
| | 36 | 1 | **3E-8211** | | FILM-STRIPE (278CM) | |
| E | 37 | 2 | **126-8472** | | SEAL (144CM) | |
| | 38 | 2 | **191-9111** | 1 | FILM-CAT | |

E-ORDER BY THE CENTIMETER
M-METRIC PART

*240-3478* **HOOD GP-ENGINE** *(contd.)* **i01990797**

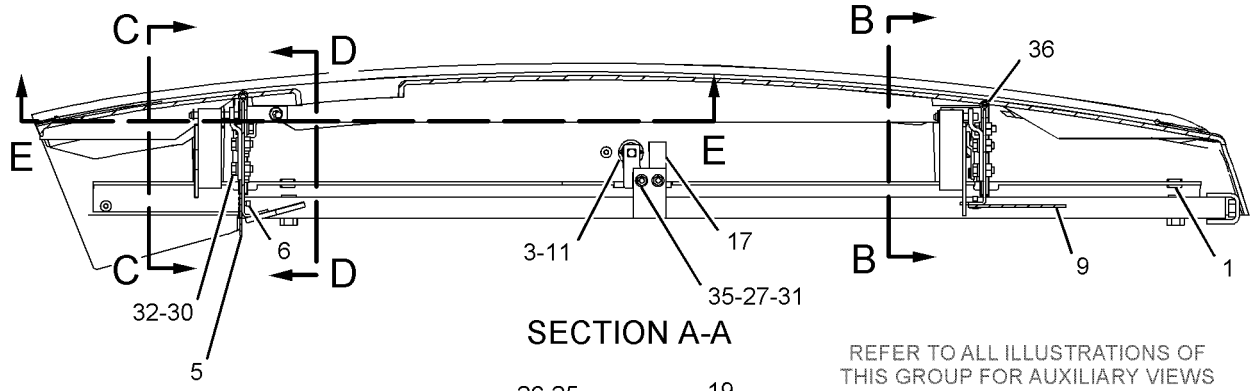


SECTION A-A

REFER TO ALL ILLUSTRATIONS OF THIS GROUP FOR AUXILIARY VIEWS

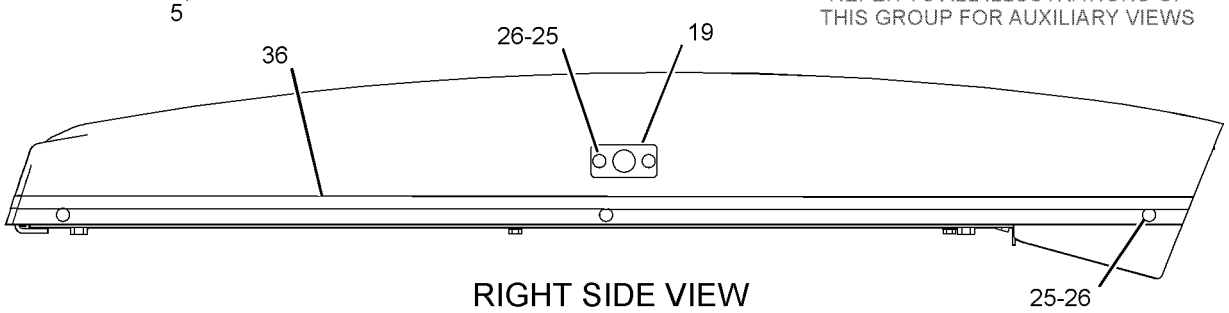


RIGHT SIDE VIEW

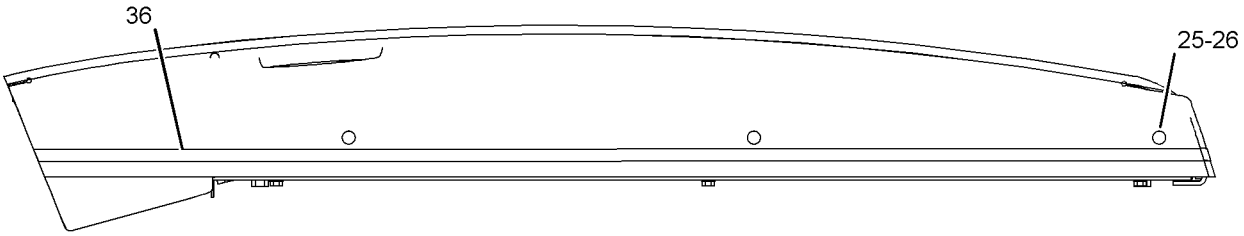


LEFT SIDE VIEW

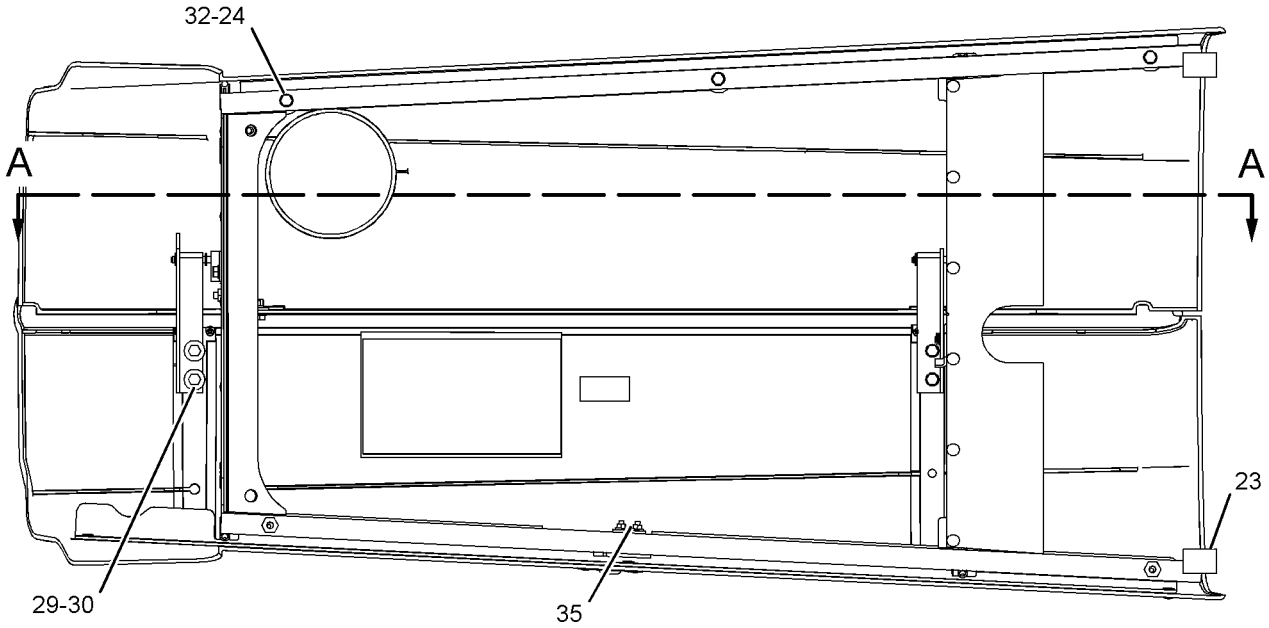


BOTTOM VIEW

GRAPHIC #1 g01031641

*240-3478* **HOOD GP-ENGINE** *(contd. )* **i01990797**

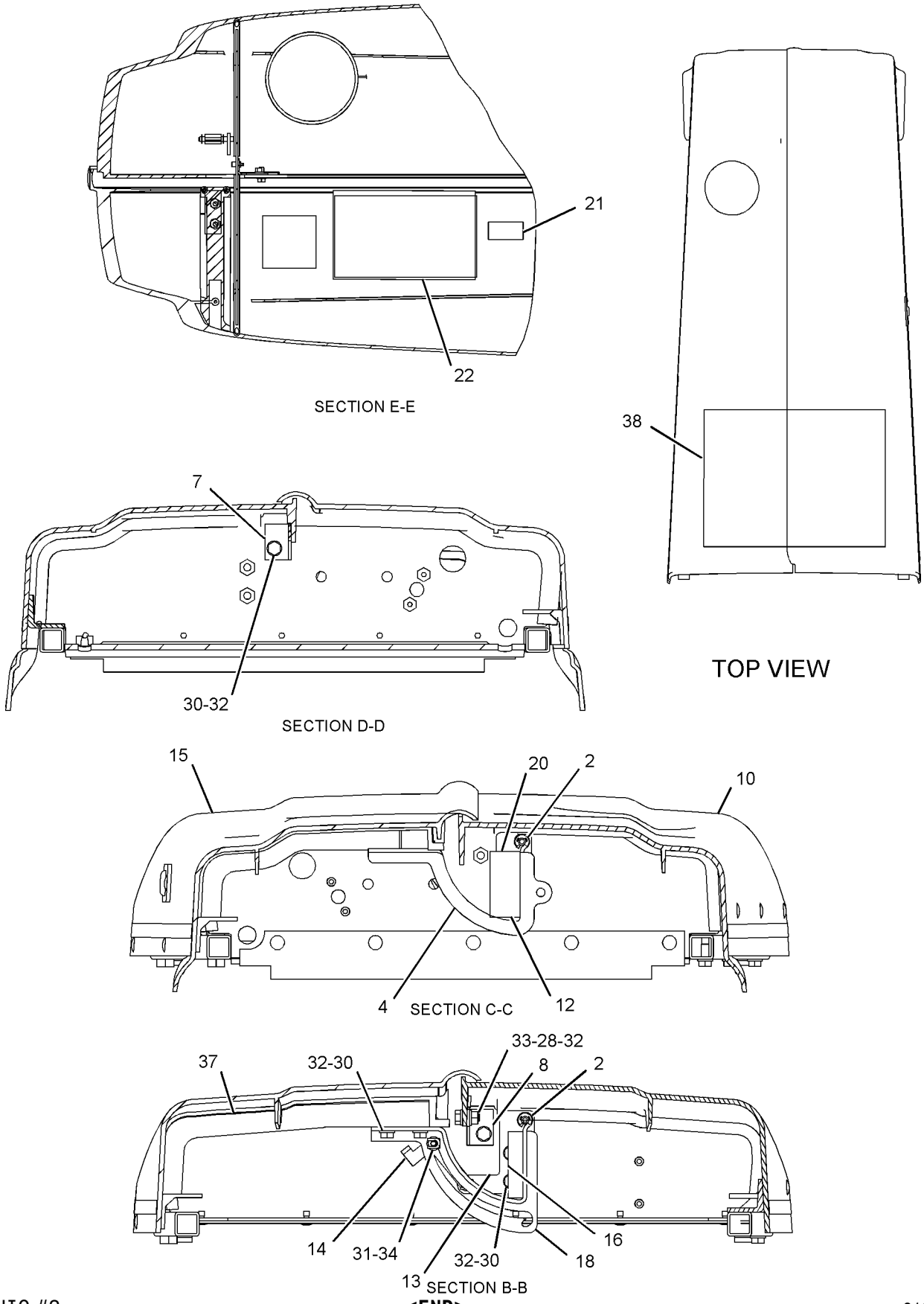


GRAPHIC #2 **<END>** g01031642

# *235-2545* LINER GP-SOUND SUPPRESSION

**S/N: BXC1-UP; DSX1-UP**
**PART OF 235-2612, 241-0168 SUPPRESSION AR-SOUND**
**AN ATTACHMENT**

**SMCS-1801** **i01985065**

| NOTE | REF NO | GRAPHIC REF | PART NUMBER | QTY | PART NAME 1 2 3 4 5 6 (PRODUCT LEVEL) | SEE PAGE |
|---|---|---|---|---|---|---|
| | 1 | 1 | **236-5606** | 1 | INSULATION (LH) | |
| | 2 | 1 | **236-5607** | 1 | INSULATION (LH) | |
| | 3 | 1 | **236-5608** | 1 | INSULATION (RH) | |
| | 4 | 1 | **236-5681** | 1 | INSULATION (RH) | |

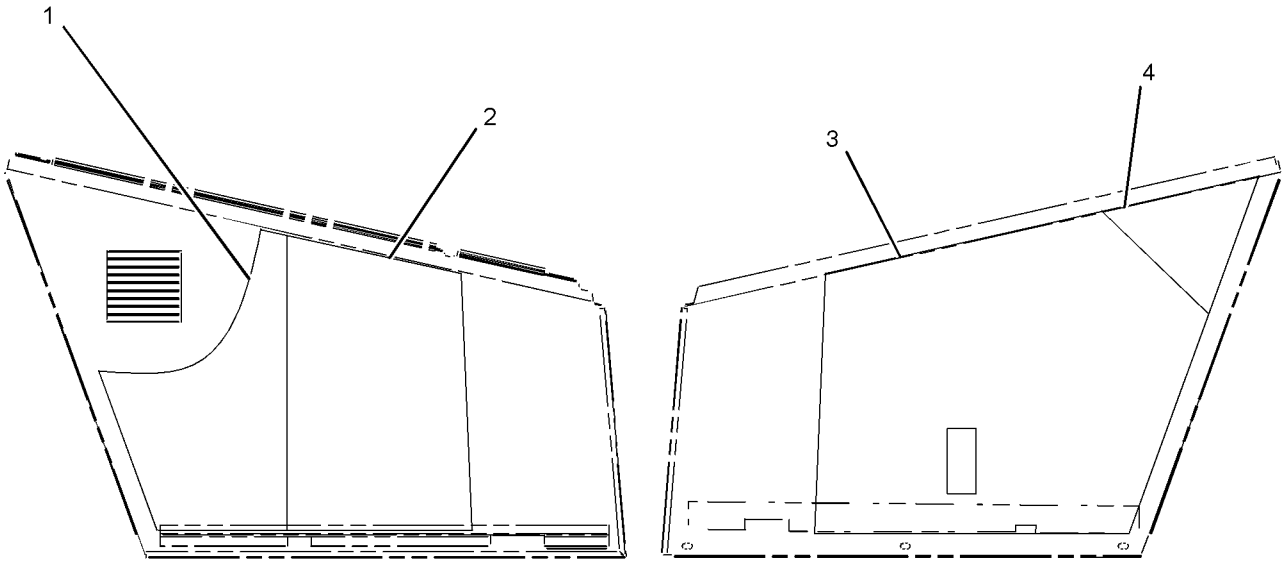


LEFT SIDE PANEL VIEW RIGHT SIDE PANEL VIEW

GRAPHIC #1 **<END>** g01030776

# *101-4447* MOUNTING GP-REGISTRATION

**S/N: BXC1-UP; DSX1-UP**
**PART OF 190-2803, 190-6413 CONVERSION AR-CERTIFICATION**
**AN ATTACHMENT**

**SMCS-1429, 7050** **i02000046**

| NOTE | REF NO | GRAPHIC REF | PART NUMBER | QTY | PART NAME 1 2 3 4 5 6 (PRODUCT LEVEL) | SEE PAGE |
|---|---|---|---|---|---|---|
| Y | 1 | 1 | **101-4448** | 1 | LAMP GP-REGISTRATION PLATE | 128 |
| | 2 | 1 | **101-4449** | 1 | HARNESS AS-REAR LIGHTING | |
| | 3 | 1 | **101-4456** | 1 | PLATE AS-NUMBER | |
| M | 4 | 1 | **8T-4136** | 1 | BOLT (M10X1.5X25MM) | |
| | 5 | 1 | **8T-4121** | 1 | WASHER-HARD (11X21X2.5MM THK) | |

M-METRIC PART
Y-SEPARATE ILLUSTRATION

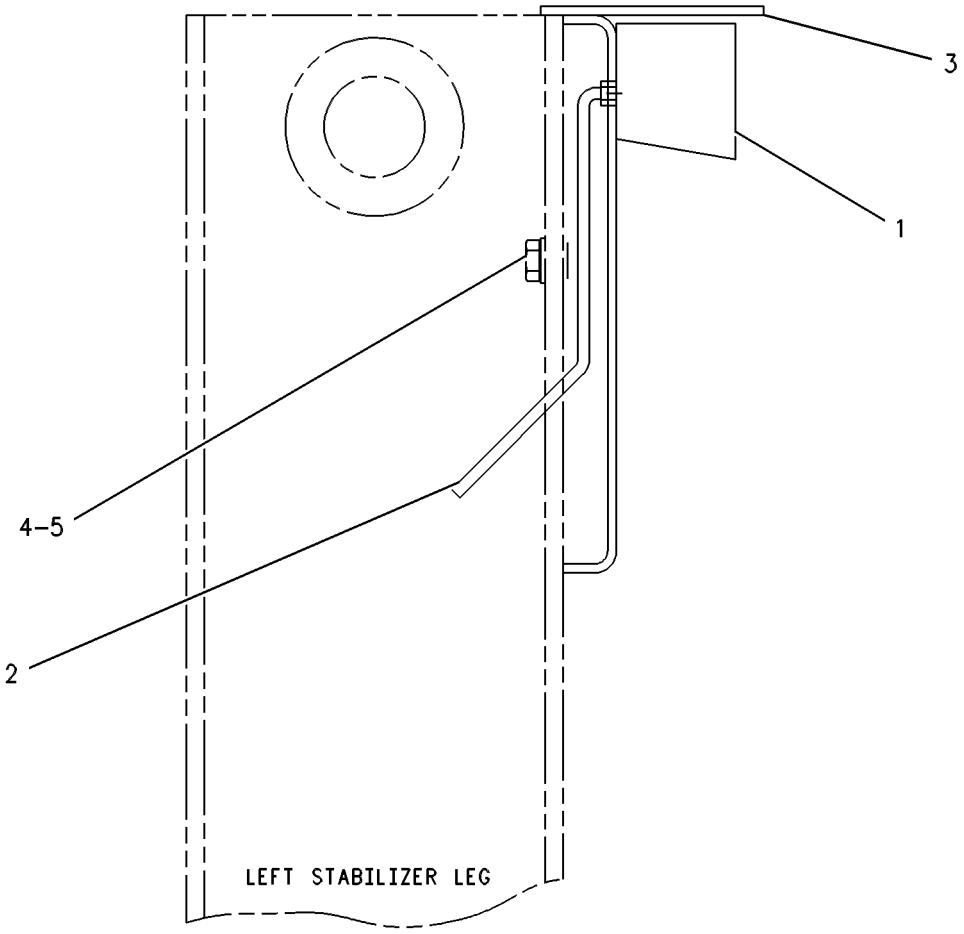


GRAPHIC #1 **<END>** g00259116

# FRAME AND BODY

## *110-6017* MOUNTING GP-REGISTRATION

**S/N: BXC1-UP; DSX1-UP**
**PART OF 123-4202 CONVERSION AR-CERTIFICATION**
**AN ATTACHMENT**

**SMCS-1429, 7050** **i02000049**

| NOTE | REF NO | GRAPHIC REF | PART NUMBER | QTY | PART NAME 1 2 3 4 5 6 (PRODUCT LEVEL) | SEE PAGE |
|---|---|---|---|---|---|---|
| Y | 1 | 1 | **101-4448** | 1 | LAMP GP-REGISTRATION PLATE | 128 |
| | 2 | 1 | **101-4449** | 1 | HARNESS AS-REAR LIGHTING | |
| | 3 | 1 | **111-0394** | 1 | PLATE AS | |
| M | 4 | 1 | **8T-4136** | 1 | BOLT (M10X1.5X25MM) | |
| | 5 | 1 | **8T-4121** | 1 | WASHER-HARD (11X21X2.5MM THK) | |

M-METRIC PART
Y-SEPARATE ILLUSTRATION

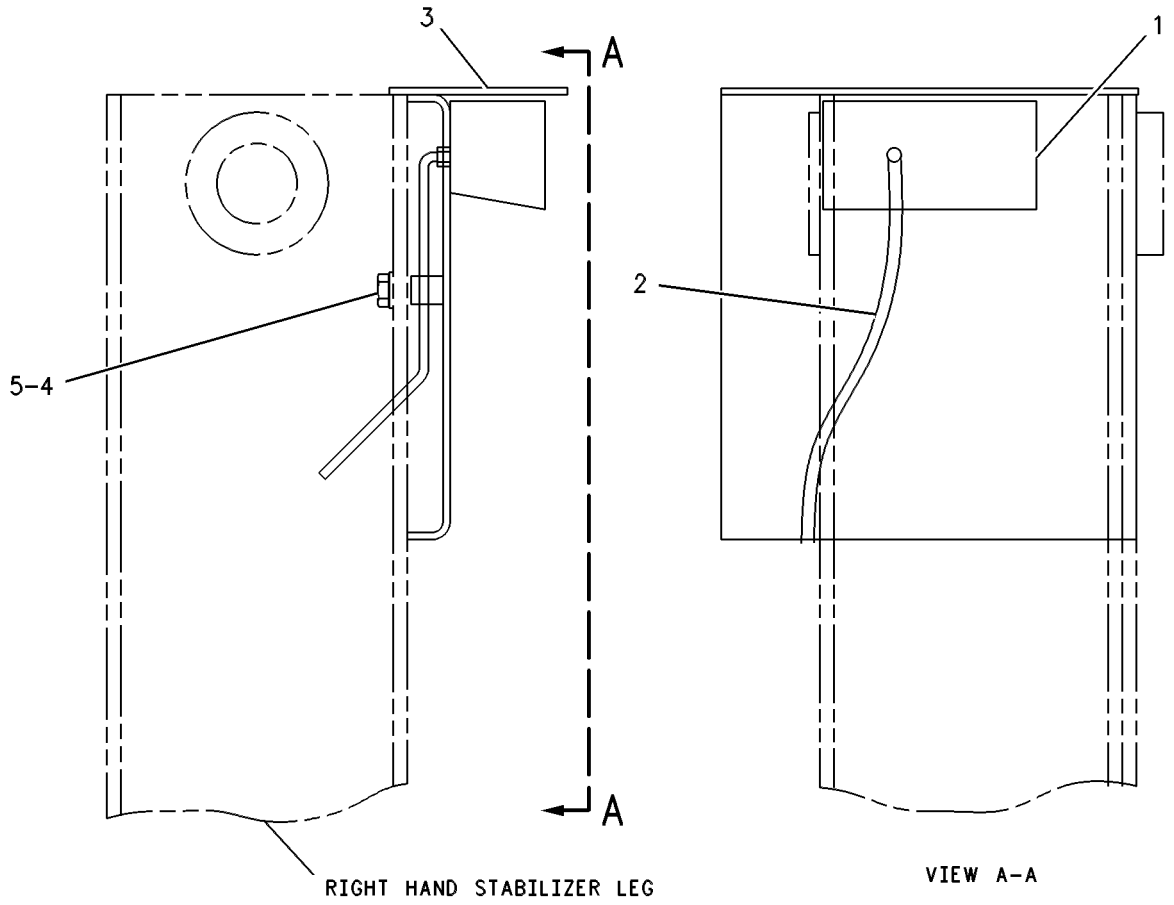


GRAPHIC #1 **<END>** g00264913

## *152-0184* REFLECTOR GP—SIDE SHIFT

**S/N: BXC1-UP; DSX1-UP**
**PART OF 190-2802 CONVERSION AR-CERTIFICATION**
**AN ATTACHMENT**

**SMCS-1429** **i01571336**

| NOTE | REF NO | GRAPHIC REF | PART NUMBER | QTY | PART NAME 1 2 3 4 5 6 (PRODUCT LEVEL) | SEE PAGE |
|---|---|---|---|---|---|---|
| | 1 | 1 | **9R-2404** | 4 | REFLECTOR-AMBER | |

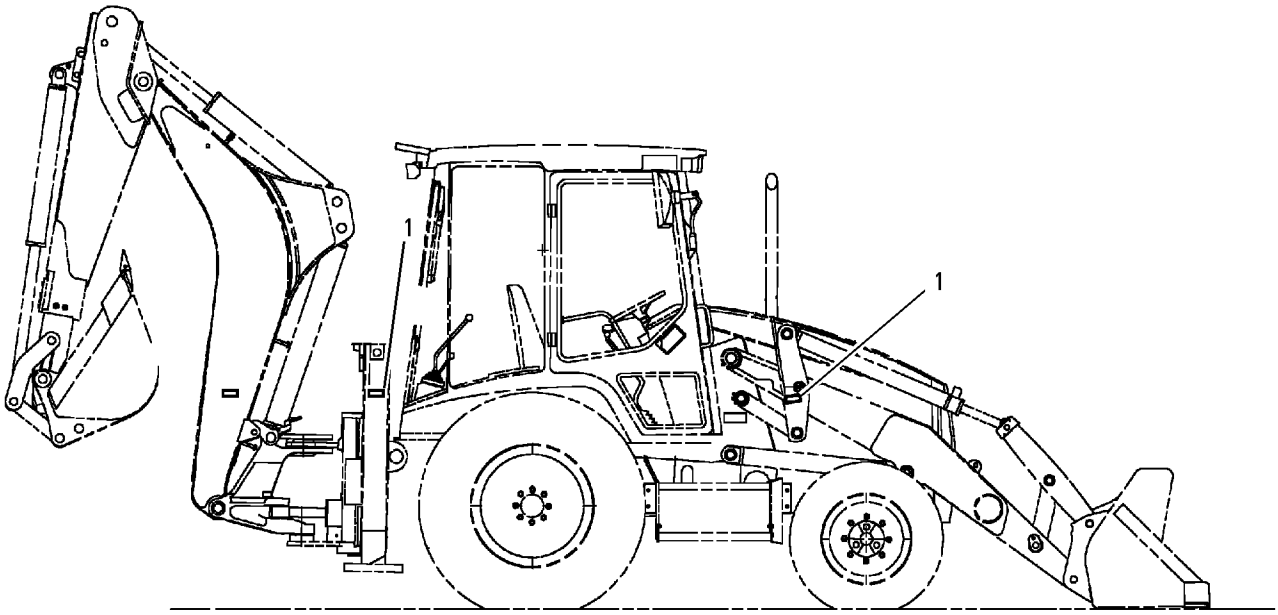


GRAPHIC #1 **<END>** g00816109

## *235-2612* SUPPRESSION AR-SOUND—NATURALLY ASPIRATED

**S/N: BXC1-UP; DSX1-UP**

**AN ATTACHMENT**

**SMCS-7076, 7261** **i01970154**

| NOTE | PART NUMBER | QTY | PART NAME 1 2 3 4 5 6 (PRODUCT LEVEL) | SEE PAGE |
|---|---|---|---|---|
| Y | *235-2545* | 1 | LINER GP-SOUND SUPPRESSION | 341 |
| Y-SEPARATE ILLUSTRATION | | | | |

**<END>**

## *241-0168* SUPPRESSION AR-SOUND

**S/N: BXC1-UP; DSX1-UP**

**AN ATTACHMENT**

**SMCS-7076, 7261** **i01971981**

| NOTE | PART NUMBER | QTY | PART NAME 1 2 3 4 5 6 (PRODUCT LEVEL) | SEE PAGE |
|---|---|---|---|---|
| Y | **235-2545** | 1 | LINER GP-SOUND SUPPRESSION | 341 |
| Y-SEPARATE ILLUSTRATION | | | | |

**<END>**

# HYDRAULIC SYSTEM

## *162-3960* ACCUMULATOR GP-RIDE CONTROL

**S/N: BXC1-UP; DSX1-UP**
**PART OF 235-5861 LINES GP-RIDE CONTROL**
**AN ATTACHMENT**

**SMCS-5077** **i01983319**

| NOTE | REF NO | GRAPHIC REF | PART NUMBER | QTY | PART NAME 1 2 3 4 5 6 (PRODUCT LEVEL) | SEE PAGE |
|---|---|---|---|---|---|---|
| | 1 | 1 | **158-2306** | 1 | VALVE-GAS | |
| | 2 | 1 | **170-0503** | 1 | FILM (PLATE-NAME) | |
| | | | | | AVAILABLE REPAIR KIT(S): | |
| | | | **160-0496** | 1 | KIT-ACCUMULATOR SERVICE | |

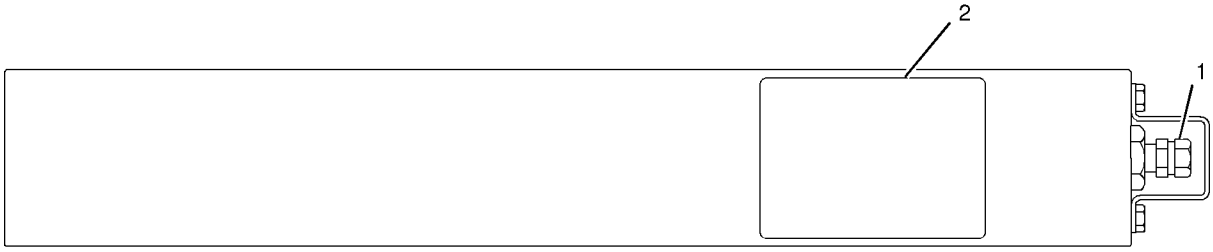


GRAPHIC #1 **<END>** g01027026

# HYDRAULIC SYSTEM

## *202-6139* CONNECTOR GP-VALVE

**S/N: BXC1-UP; DSX1-UP**

**PART OF 237-9297, 237-9298 HYDRAULIC AR**

**SMCS-5079, 5137, 7553** **i01998941**

| NOTE | REF NO | GRAPHIC REF | PART NUMBER | QTY | PART NAME 1 2 3 4 5 6 (PRODUCT LEVEL) | SEE PAGE |
|---|---|---|---|---|---|---|
| | 1 | 1 | **6V-0852** | 1 | CAP-DUST | |
| | 2 | 1 | *150-3062* | 1 | TEE AS | |
| | | 1 | **3J-7354** | 1 | SEAL-O-RING | |
| | | 1 | **4J-5477** | 1 | SEAL-O-RING | |
| | | 1 | **101-1787** | 1 | TEE AS | |
| | 3 | 1 | *164-5567* | 1 | FITTING AS | |
| | | 1 | **3J-1907** | 1 | SEAL-O-RING | |
| | | 1 | **6V-3965** | 1 | FITTING (QUICK DISCONNECT) | |
| I | 4 | 1 | **190-8957** | 1 | HOSE AS | |
| | 5 | 1 | *200-3947* | | ADAPTER AS | |
| | | 1 | **3J-1907** | 1 | SEAL-O-RING | |
| | | 1 | **4J-5477** | 1 | SEAL-O-RING | |
| | | 1 | **200-3946** | 1 | ADAPTER | |
| | 6 | 1 | *148-8316* | 1 | CONNECTOR AS | |
| | | 1 | **3J-7354** | 1 | SEAL-O-RING | |
| | | 1 | **4J-5477** | 1 | SEAL-O-RING | |
| | | 1 | **6V-8647** | 1 | CONNECTOR | |

I-REFER TO HYDRAULIC INFORMATION SYSTEM

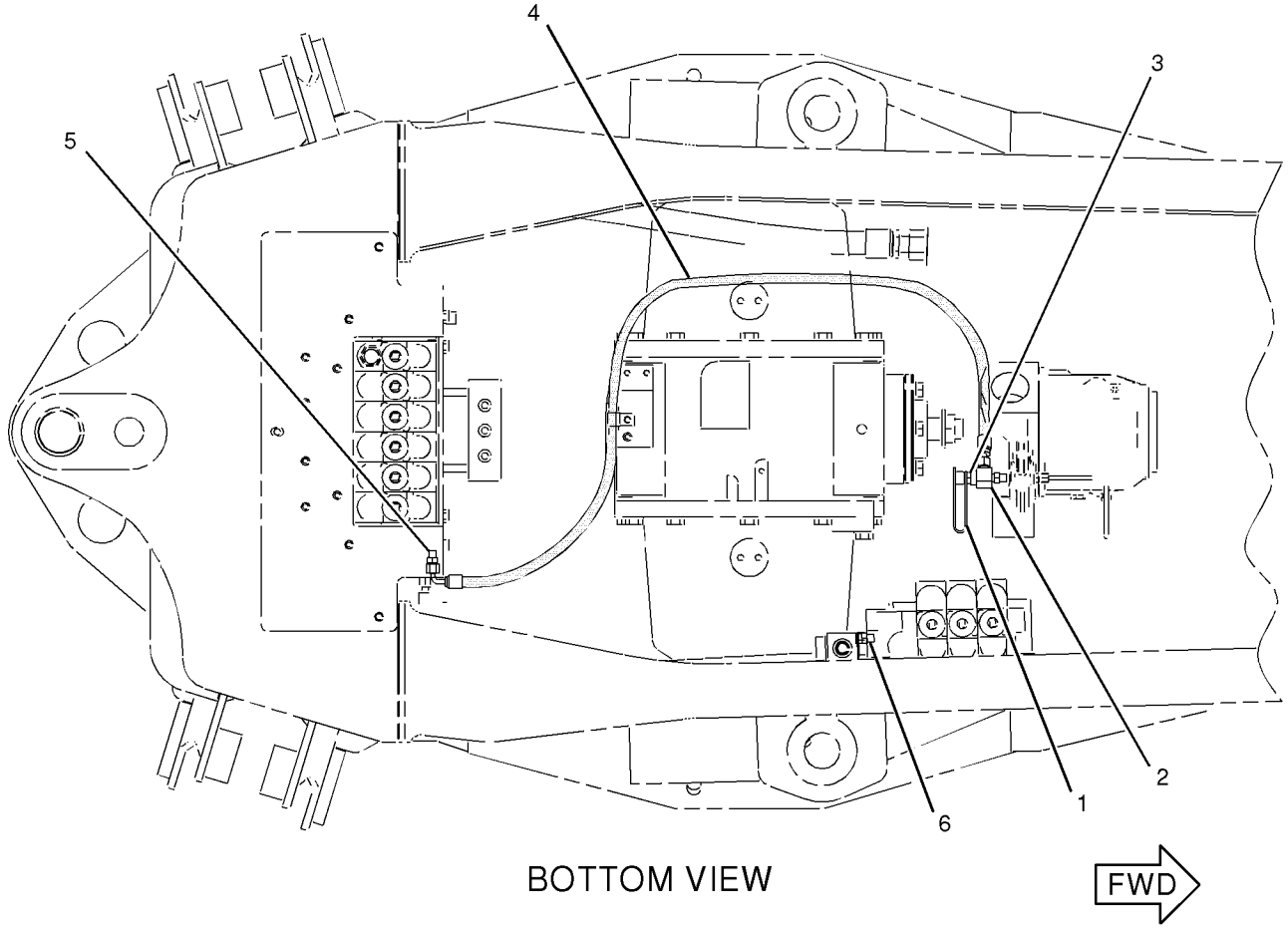


GRAPHIC #1 **<END>** g01034437

## *239-9400* CONTROL AR-RIDE—STANDARD SHIFT

**S/N: BXC1-UP; DSX1-UP**
**AN ATTACHMENT**

**SMCS-5004** **i01971583**

| NOTE | PART NUMBER | QTY | PART NAME 1 2 3 4 5 6 (PRODUCT LEVEL) | SEE PAGE |
|---|---|---|---|---|
| Y | *235-5861* | 1 | LINES GP-RIDE CONTROL | 487 |
| Y | *186-0311* | 1 | WIRING GP-RIDE CONTROL | 206 |

Y-SEPARATE ILLUSTRATION

**<END>**

## *239-9403* CONTROL AR-RIDE—AUTOSHIFT

**S/N: BXC1-UP; DSX1-UP**
**AN ATTACHMENT**

**SMCS-5004** **i01971585**

| NOTE | PART NUMBER | QTY | PART NAME 1 2 3 4 5 6 (PRODUCT LEVEL) | SEE PAGE |
|---|---|---|---|---|
| Y | *235-5861* | 1 | LINES GP-RIDE CONTROL | 487 |
| Y | *186-0312* | 1 | WIRING GP-RIDE CONTROL | 208 |

Y-SEPARATE ILLUSTRATION

**<END>**

## *239-9404* CONTROL AR-RIDE—STANDARD SHIFT WITH LOADER LOCKS

**S/N: BXC1-UP; DSX1-UP**
**AN ATTACHMENT**

**SMCS-5004** **i01971587**

| NOTE | PART NUMBER | QTY | PART NAME 1 2 3 4 5 6 (PRODUCT LEVEL) | SEE PAGE |
|---|---|---|---|---|
| Y | *235-5861* | 1 | LINES GP-RIDE CONTROL | 487 |
| Y | *194-1947* | 1 | WIRING GP-RIDE CONTROL | 210 |

Y-SEPARATE ILLUSTRATION

**<END>**

## *239-9405* CONTROL AR-RIDE—AUTOSHIFT WITH LOADER LOCKS

**S/N: BXC1-UP; DSX1-UP**
**AN ATTACHMENT**

**SMCS-5004** **i01988988**

| NOTE | PART NUMBER | QTY | PART NAME 1 2 3 4 5 6 (PRODUCT LEVEL) | SEE PAGE |
|---|---|---|---|---|
| Y | *235-5861* | 1 | LINES GP-RIDE CONTROL | 487 |
| Y | *194-1948* | 1 | WIRING GP-RIDE CONTROL | 212 |

Y-SEPARATE ILLUSTRATION

**<END>**

# HYDRAULIC SYSTEM

## 239-9413 CONTROL AR-RIDE

**S/N: BXC1-UP; DSX1-UP**
**WITH DEAD ENGINE LOWER**
**FIELD INSTALLATION**

**SMCS-5004** **i02001099**

| NOTE | PART NUMBER | QTY | PART NAME 1 2 3 4 5 6 (PRODUCT LEVEL) | SEE PAGE |
|---|---|---|---|---|
| | **173-4514** | 2 | FILM (RIDE CONTROL) | |
| Y | *235-5861* | 1 | LINES GP-RIDE CONTROL | 487 |
| | **169-0607** | 1 | SWITCH AS-ROCKER (RIDE CONTROL) (STANDARD SHIFT) | |
| | **111-7899** | 1 | GASKET | |
| Y | *194-1948* | 1 | WIRING GP-RIDE CONTROL | 212 |

Y-SEPARATE ILLUSTRATION

**<END>**

# HYDRAULIC SYSTEM

## 222-0365 CONTROL GP-HANDLE—STABILIZER

**S/N: BXC1-UP; DSX1-UP**
**PART OF 228-5730 CONTROL GP-HYDRAULIC HAND**
**AN ATTACHMENT**

**SMCS-5063, 5705** **i01854772**

| NOTE | REF NO | GRAPHIC REF | PART NUMBER | QTY | PART NAME 1 2 3 4 5 6 (PRODUCT LEVEL) | SEE PAGE |
|---|---|---|---|---|---|---|
| | 1 | 1 | **228-4593** | 1 | GAITER | |
| | 2 | 1 | **228-4594** | 1 | CABLE AS | |
| | 3 | 1 | **228-4595** | 1 | SWITCH AS | |
| | 4 | 1 | **228-4596** | 1 | ROD | |
| | 5 | 1 | **228-4597** | 1 | CLIP | |
| | 6 | 1 | **228-4592** | 1 | KNOB | |
| M | 7 | 1 | **5C-2890** | 1 | NUT (M6X1 THD) | |
| | 8 | 1 | **8T-4742** | 1 | END-YOKE ROD | |
| | 9 | 1 | **8T-4744** | 1 | PIN AS-SPRING | |

M-METRIC PART

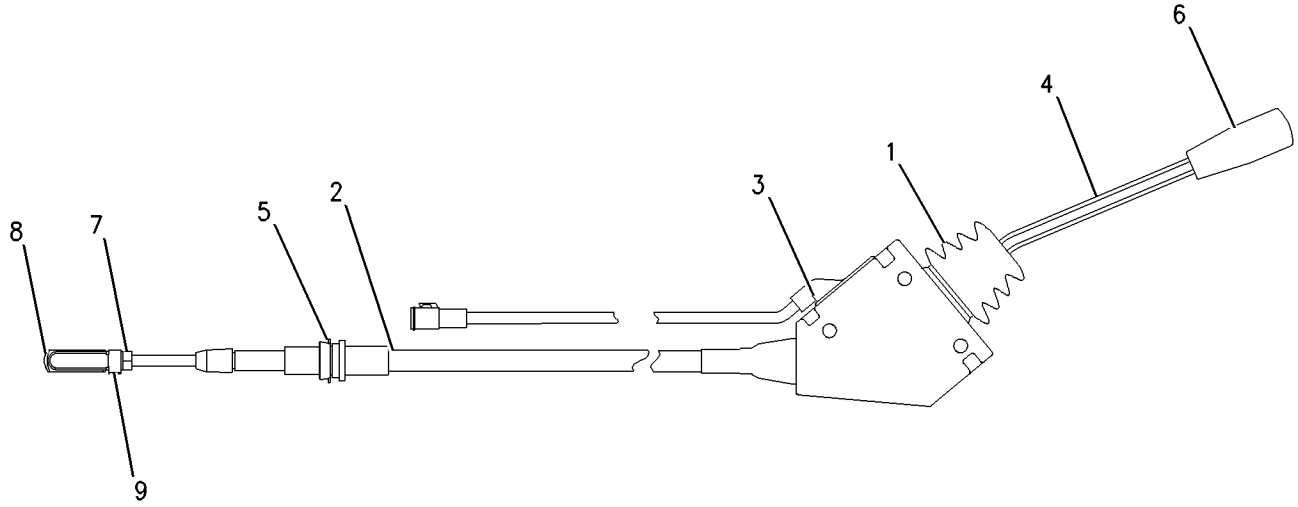


GRAPHIC #1 **<END>** g00949570

# HYDRAULIC SYSTEM

## 222-9436 CONTROL GP-HANDLE–STABILIZER

**S/N: BXC1-UP; DSX1-UP**
**PART OF 228-5731 CONTROL GP-HYDRAULIC HAND**
**AN ATTACHMENT**

**SMCS-5063, 5705** **i01854909**

| NOTE | REF NO | GRAPHIC REF | PART NUMBER | QTY | PART NAME 1 2 3 4 5 6 (PRODUCT LEVEL) | SEE PAGE |
|---|---|---|---|---|---|---|
| | 1 | 1 | **228-4593** | 1 | GAITER | |
| | 2 | 1 | **228-4594** | 1 | CABLE AS | |
| | 3 | 1 | **228-4596** | 1 | ROD | |
| | 4 | 1 | **228-4597** | 1 | CLIP | |
| | 5 | 1 | **228-4592** | 1 | KNOB | |
| M | 6 | 1 | **5C-2890** | 1 | NUT (M6X1 THD) | |
| | 7 | 1 | **8T-4742** | 1 | END-YOKE ROD | |
| | 8 | 1 | **8T-4744** | 1 | PIN AS-SPRING | |

M-METRIC PART

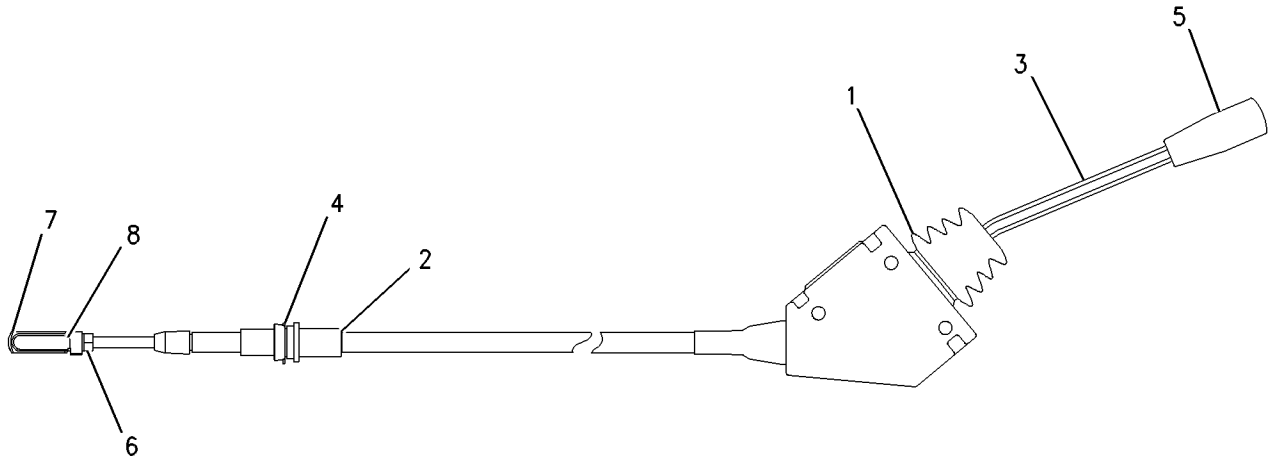


GRAPHIC #1 **<END>** g00949564

# HYDRAULIC SYSTEM

## *164-1400* CONTROL GP-HYDRAULIC HAND

**S/N: BXC1-UP; DSX1-UP**
**STANDARD**
**AN ATTACHMENT**

**SMCS-5063** **i01434312**

| NOTE | REF NO | GRAPHIC REF | PART NUMBER | QTY | PART NAME 1 2 3 4 5 6 (PRODUCT LEVEL) | SEE PAGE |
|---|---|---|---|---|---|---|
| | 1 | 1 | **8T-4773** | 4 | BALL JOINT | |
| | 2 | 1 | **8T-4815** | 4 | ROD END | |
| | 3 | 1 | **9R-9901** | 6 | FASTENER (CLIP) | |
| | 4 | 1 | **164-1361** | 2 | BOOT | |
| | 5 | 1 | **164-1371** | 1 | PLATE | |
| | 6 | 1 | **164-1399** | 2 | KNOB | |
| | 7 | 1 | **164-1402** | 2 | SLEEVE | |
| | 8 | 1 | **164-1404** | 2 | SPACER (23MM THK) | |
| | 9 | 1 | **164-1406** | 4 | ROD | |
| | 10 | 1 | **164-1409** | 1 | LEVER AS | |
| | 11 | 1 | **164-1411** | 1 | LEVER AS | |
| | 12 | 1 | **164-1435** | 2 | PLATE | |
| | 13 | 1 | **164-1560** | 1 | TOWER AS | |
| | 14 | 1 | **167-8248** | 1 | CONSOLE-REAR | |
| | 15 | 1 | **170-6312** | 4 | BEARING | |
| | 16 | 1 | **179-8235** | 4 | LOCKPIN | |
| | 17 | 1 | **190-5130** | 1 | FILM | |
| M | 18 | 1 | **6V-7744** | 8 | LOCKNUT (M10X1.50 THD) | |
| | 19 | 1 | **7X-7729** | 8 | WASHER (11X25X3MM THK) | |
| | 20 | 1 | **8C-4987** | 4 | PIN-CLEVIS | |
| | 21 | 1 | **8T-4121** | 8 | WASHER-HARD (11X21X2.5MM THK) | |
| M | 22 | 1 | **8T-4133** | 8 | NUT (M10X1.5 THD) | |
| M | 23 | 1 | **8T-4138** | 6 | BOLT (M6X1X20MM) | |
| M | 24 | 1 | **8T-4172** | 2 | BOLT (M10X1.50X80MM) | |
| M | 25 | 1 | **8T-4195** | 2 | BOLT (M10X1.5X30MM) | |
| M | 26 | 1 | **8T-6466** | 2 | BOLT (M10X1.50X60MM) | |
| | 27 | 1 | **9X-2038** | 4 | WASHER (7X19X2MM THK) | |
| M | 28 | 1 | **9X-2045** | 4 | SCREW-TRUSS HEAD (M6X1X20MM) | |
| | 29 | 1 | **9X-8256** | 6 | WASHER (6.6X12X2MM THK) | |

M-METRIC PART

*164-1400* **CONTROL GP-HYDRAULIC HAND** *(contd.)* **i01434312**

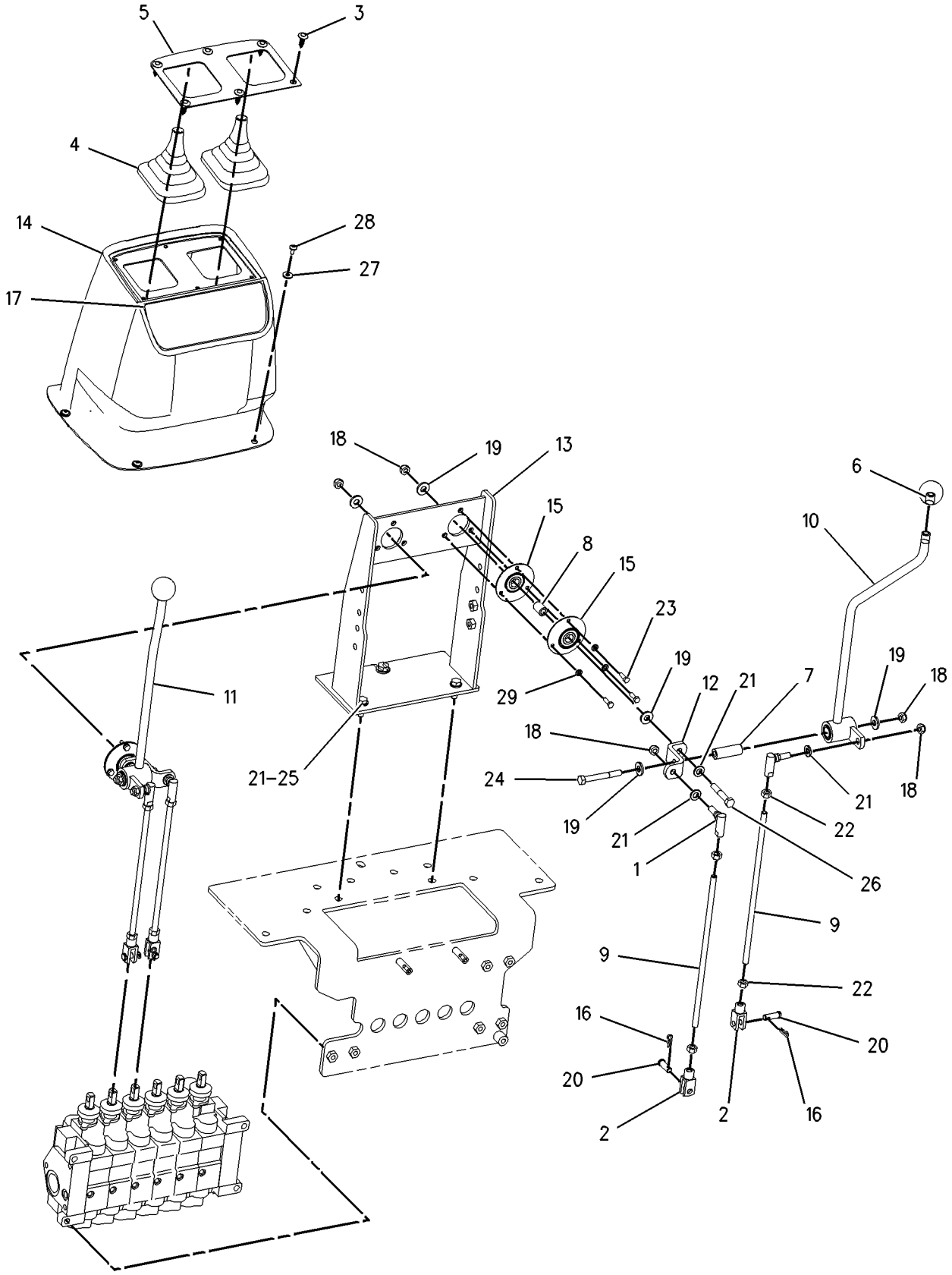


GRAPHIC #1 **<END>** g00739022

# HYDRAULIC SYSTEM

## *164-1420* CONTROL GP-HYDRAULIC HAND

**S/N: BXC1-UP; DSX1-UP**
**EXCAVATOR**
**PART OF 164-1430 CONVERSION GP-HYD HAND CONTROL**
**AN ATTACHMENT**

**SMCS-5063** **i02000614**

| NOTE | REF NO | GRAPHIC REF | PART NUMBER | QTY | PART NAME 1 2 3 4 5 6 (PRODUCT LEVEL) | SEE PAGE |
|---|---|---|---|---|---|---|
| | 1 | 1 | **9X-8256** | 6 | WASHER (6.6X12X2MM THK) | |
| | 2 | 1 | **8T-4773** | 10 | BALL JOINT | |
| | 3 | 1 | **8T-4815** | 2 | ROD END | |
| | 4 | 1 | **9R-9901** | 6 | FASTENER (CLIP) | |
| | 5 | 1 | **142-7405** | 2 | COLLAR | |
| | 6 | 1 | **164-1361** | 2 | BOOT | |
| | 7 | 1 | **164-1371** | 1 | PLATE | |
| | 8 | 1 | **164-1399** | 2 | KNOB | |
| | 9 | 1 | **164-1402** | 2 | SLEEVE | |
| | 10 | 1 | **164-1404** | 2 | SPACER (23MM THK) | |
| | 11 | 1 | **164-1409** | 1 | LEVER AS (RH) | |
| | 12 | 1 | **164-1411** | 1 | LEVER AS (LH) | |
| | 13 | 1 | **164-1421** | 1 | PLATE | |
| | 14 | 1 | **164-1422** | 1 | SHAFT AS | |
| | 15 | 1 | **164-1425** | 1 | COUPLER AS | |
| | 16 | 1 | **164-1427** | 2 | ROD | |
| | 17 | 1 | **164-1429** | 1 | COUPLER AS | |
| | 18 | 1 | **164-1435** | 2 | PLATE | |
| | 19 | 1 | **164-1438** | 2 | ROD | |
| | 20 | 1 | **164-1441** | 2 | ROD | |
| | 21 | 1 | **164-1560** | 1 | TOWER AS | |
| | 22 | 1 | **167-8248** | 1 | CONSOLE-REAR | |
| | 23 | 1 | **170-6312** | 4 | BEARING | |
| | 24 | 1 | **9R-2807** | 2 | CLIP | |
| | 25 | 1 | **190-5128** | 1 | FILM (BUCKET CONTROL) | |
| M | 26 | 1 | **6V-7744** | 14 | LOCKNUT (M10X1.5 THD) | |
| M | 27 | 1 | **6V-8932** | 2 | SETSCREW-SOCKET (M6X1X10MM) | |
| | 28 | 1 | **7X-7729** | 8 | WASHER (11X25X3MM THK) | |
| | 29 | 1 | **9R-2806** | 2 | PIN | |
| | 30 | 1 | **8T-4121** | 20 | WASHER-HARD (11X21X2.5MM THK) | |
| M | 31 | 1 | **8T-4133** | 16 | NUT (M10X1.5 THD) | |
| M | 32 | 1 | **8T-4138** | 6 | BOLT (M6X1X20MM) | |
| M | 33 | 1 | **8T-4172** | 2 | BOLT (M10X1.50X80MM) | |
| M | 34 | 1 | **8T-4195** | 6 | BOLT (M10X1.5X30MM) | |
| M | 35 | 1 | **8T-6466** | 2 | BOLT (M10X1.50X60MM) | |
| | 36 | 1 | **9X-2038** | 4 | WASHER (7X19X2MM THK) | |
| M | 37 | 1 | **9X-2045** | 4 | SCREW-TRUSS HEAD (M6X1X20MM) | |

M-METRIC PART

*164-1420* **CONTROL GP-HYDRAULIC HAND** *(contd.)* **i02000614**

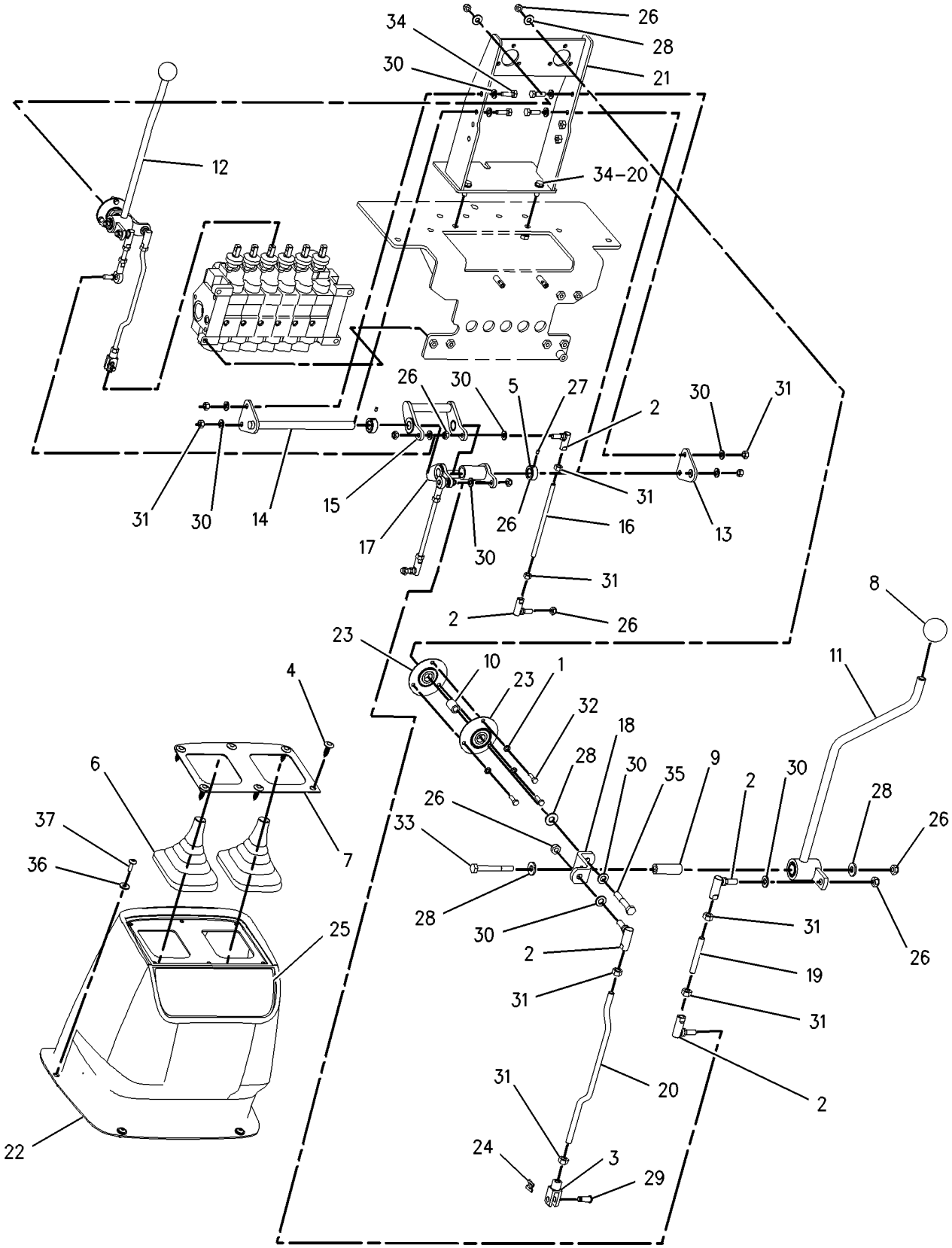


GRAPHIC #1 **<END>** g00756911

# HYDRAULIC SYSTEM

## *164-1440* CONTROL GP-HYDRAULIC HAND

**S/N: BXC1-UP; DSX1-UP**
**STANDARD, CROSS**
**PART OF 164-1450 CONTROL GP-HYDRAULIC HAND**
**AN ATTACHMENT**

**SMCS-5063** **i01665889**

| NOTE | REF NO | GRAPHIC REF | PART NUMBER | QTY | PART NAME 1 2 3 4 5 6 (PRODUCT LEVEL) | SEE PAGE |
|---|---|---|---|---|---|---|
| | 1 | 1 | **8T-4773** | 4 | BALL JOINT | |
| | 2 | 1 | **8T-4815** | 4 | ROD END | |
| | 3 | 1 | **9R-9901** | 6 | FASTENER | |
| | 4 | 1 | **164-1361** | 2 | BOOT | |
| | 5 | 1 | **164-1371** | 1 | PLATE | |
| | 6 | 1 | **164-1399** | 2 | KNOB | |
| | 7 | 1 | **164-1406** | 2 | ROD | |
| | 8 | 1 | **164-1441** | 2 | ROD | |
| | 9 | 1 | **164-1447** | 1 | LEVER AS-RH | |
| | 10 | 1 | **164-1451** | 1 | BRACKET AS | |
| | 11 | 1 | **164-1452** | 1 | BRACKET AS | |
| | 12 | 1 | **164-1455** | 1 | LEVER AS-LH | |
| | 13 | 1 | **164-1565** | 1 | TOWER AS | |
| | 14 | 1 | **167-8248** | 1 | CONSOLE-REAR | |
| | 15 | 1 | **179-8235** | 4 | LOCK PIN | |
| | 16 | 1 | **190-5131** | 1 | FILM-WARNING | |
| | 17 | 1 | **190-5134** | 2 | FILM (PATTERN) | |
| M | 18 | 1 | **6V-7744** | 4 | LOCKNUT (M10X1.5 THD) | |
| | 19 | 1 | **8C-4987** | 4 | PIN-CLEVIS | |
| | 20 | 1 | **8T-4121** | 6 | WASHER-HARD (11X21X2.5MM THK) | |
| M | 21 | 1 | **8T-4133** | 8 | NUT (M10X1.5 THD) | |
| M | 22 | 1 | **8T-4195** | 2 | BOLT (M10X1.5X30MM) | |
| | 23 | 1 | **8T-4224** | 8 | WASHER-HARD (8.8X16X2MM THK) | |
| M | 24 | 1 | **8T-7547** | 8 | BOLT (M8X1.25X30MM) | |
| | 25 | 1 | **9X-2038** | 4 | WASHER (7X19X2MM THK) | |
| M | 26 | 1 | **9X-2045** | 4 | SCREW-TRUSS HEAD (M6X1X20MM) | |

M-METRIC PART

*164-1440* **CONTROL GP-HYDRAULIC HAND** *(contd.)* **i01665889**

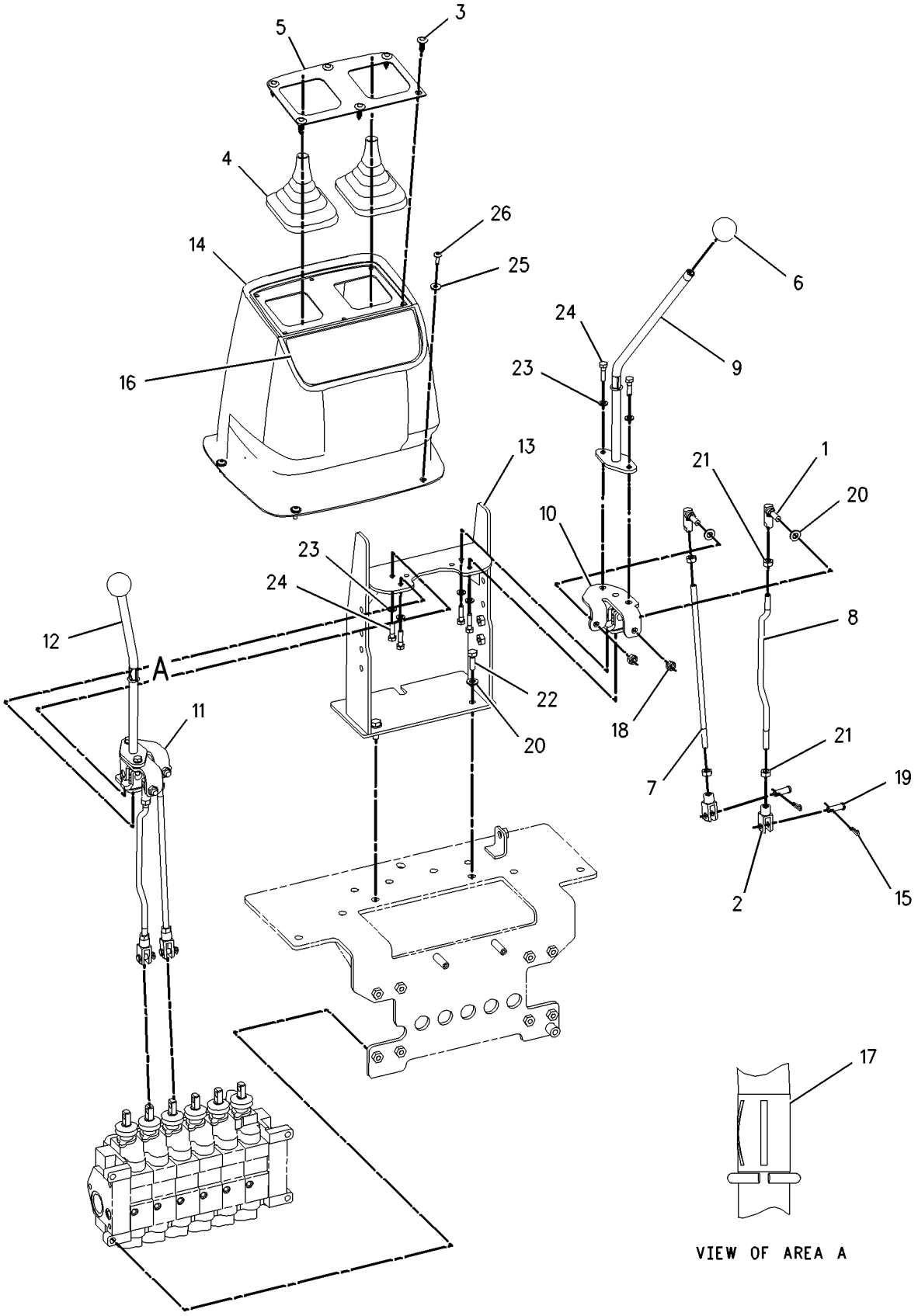


GRAPHIC #1 **<END>** g00860216

# HYDRAULIC SYSTEM

## *164-1450* CONTROL GP-HYDRAULIC HAND–KIT

**S/N: BXC1-UP; DSX1-UP**
**FOUR TO TWO LEVER, MECHANICAL CONTROLS**
**AN ATTACHMENT**

**SMCS-5063** **i01502288**

| NOTE | REF NO | GRAPHIC REF | PART NUMBER | QTY | PART NAME 1 2 3 4 5 6 (PRODUCT LEVEL) | SEE PAGE |
|---|---|---|---|---|---|---|
| Y | 1 | 1 | *164-1440* | 1 | CONTROL GP-HYDRAULIC HAND | 356 |

Y-SEPARATE ILLUSTRATION

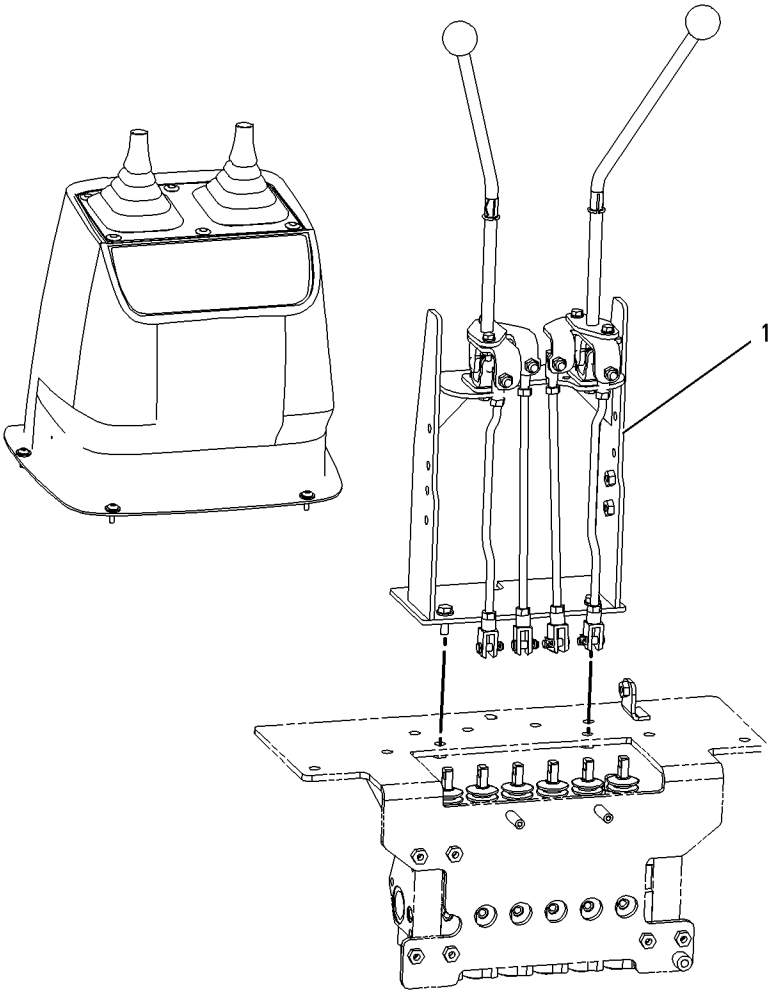


GRAPHIC #1 **<END>** g00779256

# HYDRAULIC SYSTEM

## *183-3130* CONTROL GP-HYDRAULIC HAND—PARALLEL LIFT

**S/N: BXC1-UP; DSX1-UP**

**PART OF 237-9288, 237-9289 CHASSIS AR**

**SMCS-5063** **i01668748**

| NOTE | REF NO | GRAPHIC REF | PART NUMBER | QTY | PART NAME 1 2 3 4 5 6 (PRODUCT LEVEL) | SEE PAGE |
|---|---|---|---|---|---|---|
| | 1 | 1 | **1K-0502** | 7 | WASHER (25.4X16.3X1.2MM THK) | |
| | 2 | 1 | **2R-0364** | 3 | RING-RETAINING | |
| | 3 | 1 | **3E-3365** | 1 | WEDGE-RECEPTACLE LOCK (2 PIN) | |
| | 4 | 1 | **5H-3193** | 1 | PIN-SPRING | |
| | 5 | 1 | **8T-4773** | 2 | BALL JOINT | |
| | 6 | 1 | **8T-4815** | 2 | ROD END | |
| | 7 | 1 | **9R-1765** | 1 | KNOB | |
| | 8 | 1 | **9R-1766** | 1 | KNOB | |
| | 9 | 1 | **9R-1767** | 1 | BOOT | |
| | 10 | 1 | **9R-9868** | 1 | SWITCH AS-PUSH BUTTON | |
| | | 1 | **186-3735** | 2 | PIN-CONNECTOR | |
| | 11 | 1 | **107-5591** | 1 | NUT-JAM (3/4-16 THD) | |
| | 12 | 1 | **164-1368** | 8 | CLIP | |
| | 13 | 1 | **164-1369** | 1 | PLATE | |
| | 14 | 1 | **179-8235** | 2 | LOCK PIN | |
| | 15 | 1 | **183-3121** | 1 | BRACKET AS | |
| | 16 | 1 | **183-3122** | 1 | LEVER AS | |
| | 17 | 1 | **183-3125** | 1 | ROD | |
| | 18 | 1 | **183-3127** | 1 | ROD | |
| | 19 | 1 | **183-3135** | 1 | JOINT AS | |
| | 20 | 1 | **183-3137** | 1 | PIN | |
| | 21 | 1 | **201-8069** | 1 | SEAL | |
| | 22 | 1 | **102-8802** | 1 | KIT-RECEPTACLE (2 PIN) | |
| | | | | | (KIT INCLUDES RECEPTACLE AS AND WEDGE) | |
| | 23 | 1 | **3S-2093** | 1 | STRAP-CABLE | |
| M | 24 | 1 | **6V-7744** | 2 | LOCKNUT (M10X1.5 THD) | |
| | 25 | 1 | **8C-4987** | 2 | PIN-CLEVIS | |
| | 26 | 1 | **8T-4121** | 4 | WASHER-HARD (11X21X2.5MM THK) | |
| M | 27 | 1 | **8T-4133** | 6 | NUT (M10X1.5 THD) | |
| M | 28 | 1 | **8T-4195** | 2 | BOLT (M10X1.5X30MM) | |
| | 29 | 1 | **8T-4223** | 2 | WASHER-HARD (13.5X25.5X3MM THK) | |
| | 30 | 1 | **8T-9501** | 2 | SCREW (10-16X.75 IN) | |

M-METRIC PART

*183-3130* **CONTROL GP-HYDRAULIC HAND** *(contd.)* **i01668748**

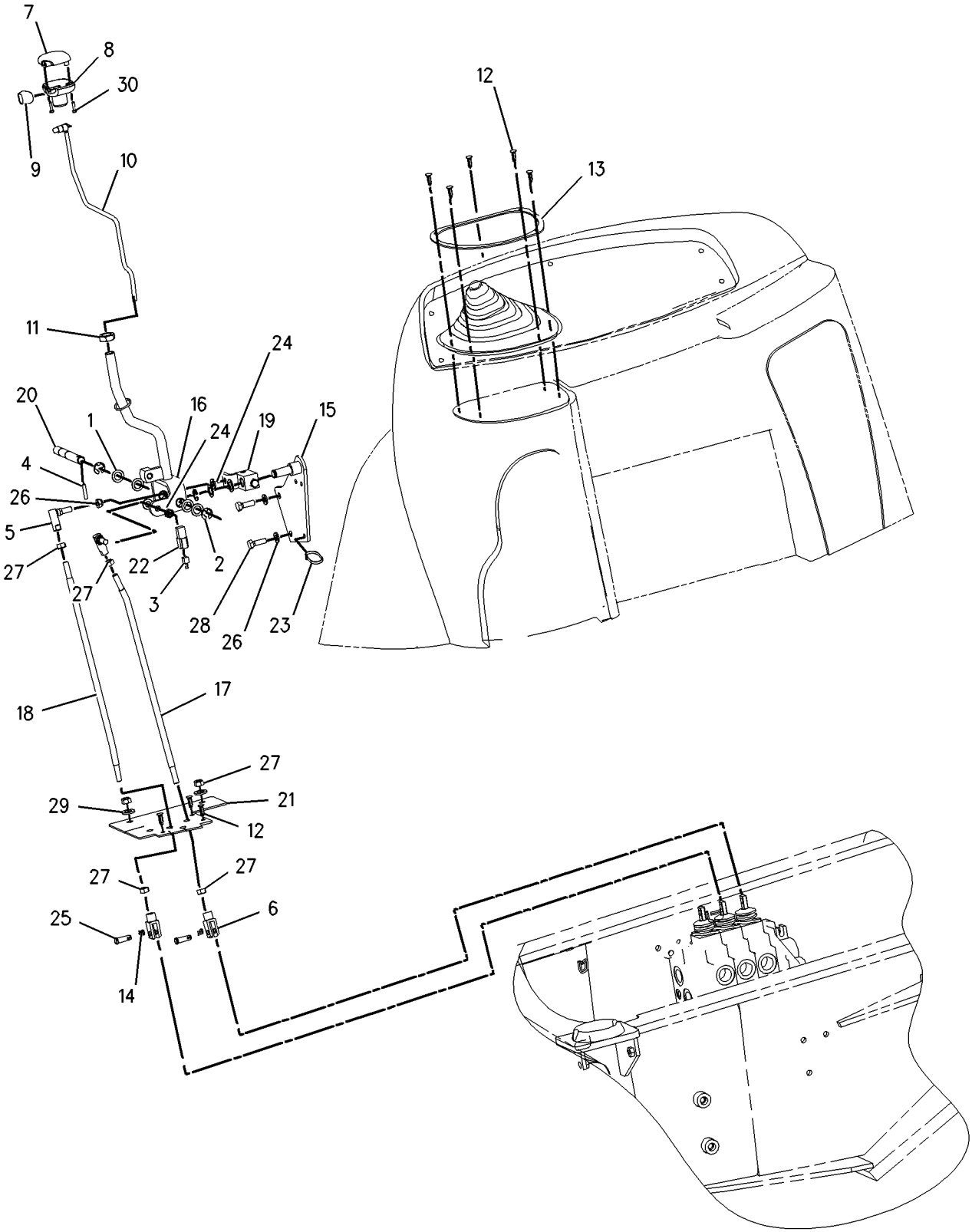


GRAPHIC #1 **<END>** g00862023

# HYDRAULIC SYSTEM

## *183-3150* CONTROL GP-HYDRAULIC HAND—LOADER SINGLE TILT

**S/N: BXC1-UP; DSX1-UP**
**PART OF 186-5337, 186-5338 HYDRAULIC AR**
**AN ATTACHMENT**

**SMCS-5063** **i01657347**

| NOTE | REF NO | GRAPHIC REF | PART NUMBER | QTY | PART NAME 1 2 3 4 5 6 (PRODUCT LEVEL) | SEE PAGE |
|---|---|---|---|---|---|---|
| | 1 | 1 | **1K-0502** | 3 | WASHER (25.4X16.3X1.2MM THK) | |
| | 2 | 1 | **2R-0364** | 1 | RING-RETAINING | |
| | 3 | 1 | **8T-4773** | 1 | BALL JOINT | |
| | 4 | 1 | **8T-4815** | 1 | ROD END | |
| M | 5 | 1 | **134-0453** | 1 | TURN BUCKLE | |
| | 6 | 1 | **164-1395** | 1 | KNOB | |
| | 7 | 1 | **179-8235** | 1 | LOCK PIN | |
| | 8 | 1 | **183-3151** | 1 | LEVER AS | |
| | | 1 | **183-3136** | 1 | BEARING | |
| | 9 | 1 | **183-3153** | 1 | ROD | |
| | 10 | 1 | **183-3156** | 1 | ROD | |
| | 11 | 1 | **8C-4987** | 1 | PIN-CLEVIS | |
| | 12 | 1 | **8T-4121** | 1 | WASHER-HARD (11X21X2.5MM THK) | |
| M | 13 | 1 | **8T-4133** | 3 | NUT (M10X1.5 THD) | |
| M | 14 | 1 | **9X-2065** | 1 | NUT | |

M-METRIC PART

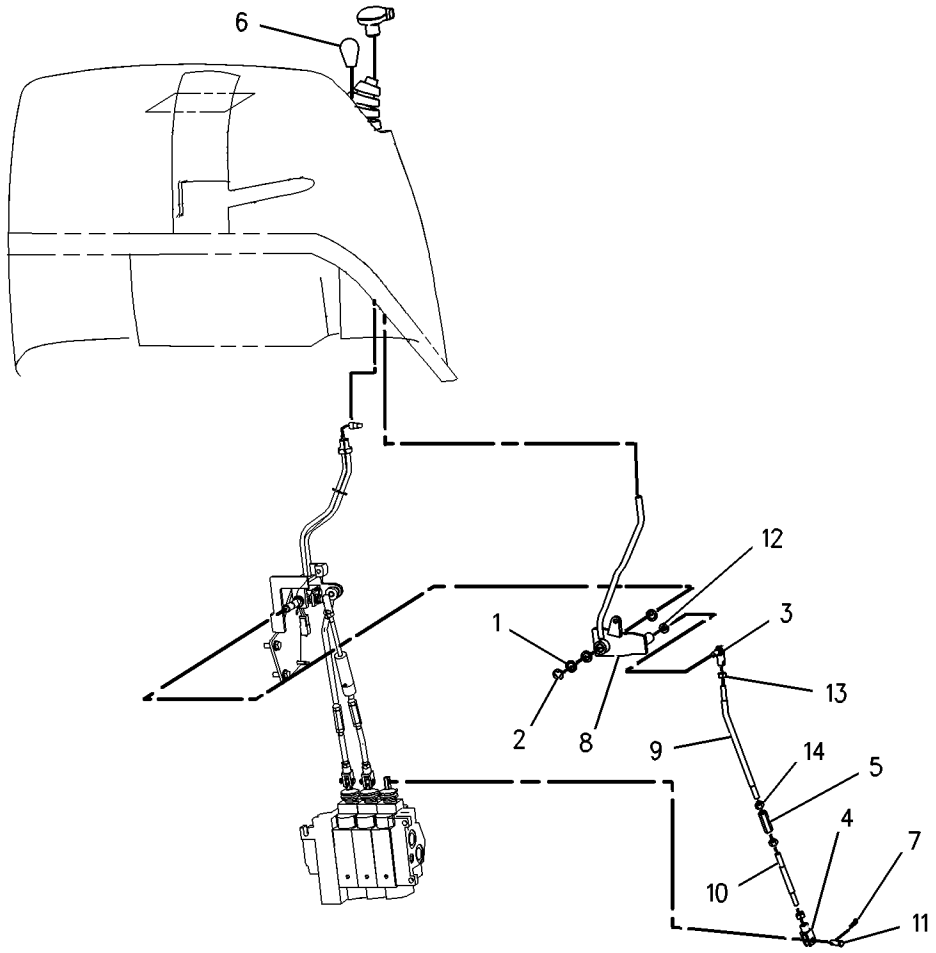


GRAPHIC #1 **<END>** g00738135

# HYDRAULIC SYSTEM

## *183-3159* CONTROL GP-HYDRAULIC HAND—PARALLEL LIFT

**S/N: BXC1-UP; DSX1-UP**
**PART OF 185-0062, 185-0063 HYDRAULIC AR**
**AN ATTACHMENT**

**SMCS-5063** **i01397127**

| NOTE | REF NO | GRAPHIC REF | PART NUMBER | QTY | PART NAME 1 2 3 4 5 6 (PRODUCT LEVEL) | SEE PAGE |
|---|---|---|---|---|---|---|
| | 1 | 1 | **1K-0502** | 3 | WASHER (25.4X16.3X1.2MM THK) | |
| | 2 | 1 | **2R-0364** | 1 | RING-RETAINING | |
| | 3 | 1 | **8T-4773** | 1 | BALL JOINT | |
| | 4 | 1 | **8T-4815** | 1 | ROD END | |
| | 5 | 1 | **164-1395** | 1 | KNOB | |
| | 6 | 1 | **179-8235** | 1 | LOCKPIN | |
| | 7 | 1 | **183-3125** | 1 | ROD | |
| | 8 | 1 | **183-3151** | 1 | LEVER AS | |
| | 9 | 1 | **8C-4987** | 1 | PIN-CLEVIS | |
| | 10 | 1 | **8T-4121** | 1 | WASHER-HARD (11X21X2.5MM THK) | |
| M | 11 | 1 | **8T-4133** | 2 | NUT (M10X1.5 THD) | |

M-METRIC PART

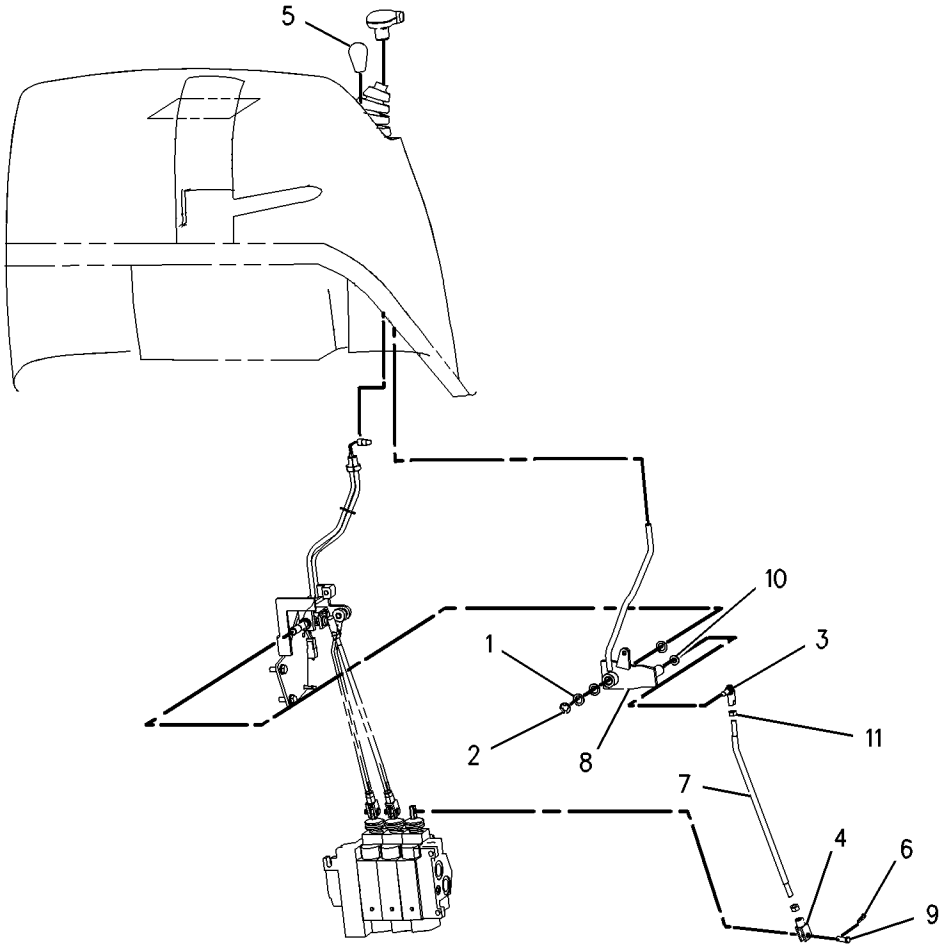


GRAPHIC #1 **<END>** g00738112

# HYDRAULIC SYSTEM

## *228-5730* CONTROL GP-HYDRAULIC HAND–STABILIZER

**S/N: BXC1-UP; DSX1-UP**
**PART OF 210-8918 STABILIZER AR**
**AN ATTACHMENT**

**SMCS-5063** **i01854905**

| NOTE | REF NO | GRAPHIC REF | PART NUMBER | QTY | PART NAME 1 2 3 4 5 6 (PRODUCT LEVEL) | SEE PAGE |
|---|---|---|---|---|---|---|
| | 1 | 1 | **210-8914** | 1 | PLATE | |
| | 2 | 1 | **210-8917** | 2 | LEVER GP-CONTROL VALVE (STABILIZER) | |
| | | 1 | **8T-0328** | 1 | WASHER-HARD (5.5X10X1MM THK) | |
| M | | 1 | **134-1374** | 1 | BOLT-SOCKET HEAD (M5X.8X20MM) | |
| M | | 1 | **136-0155** | 1 | SETSCREW | |
| | 3 | 1 | **217-3383** | 1 | BRACKET AS | |
| Y | 4 | 1 | **222-0365** | 2 | CONTROL GP-HANDLE | 350 |
| | 5 | 1 | **229-1203** | 1 | COVER | |
| M | 6 | 1 | **129-3178** | 3 | LOCKNUT (M6X1 THD) | |
| M | 7 | 1 | **5C-2890** | 7 | NUT (M6X1 THD) | |
| M | 8 | 1 | **5C-9553** | 4 | BOLT (M6X1X16MM) | |
| | 9 | 1 | **5P-4115** | 3 | WASHER-HARD (7.2X19X2MM THK) | |
| M | 10 | 1 | **7X-0465** | 3 | BOLT (M6X1X100MM) | |
| | 11 | 1 | **8T-4205** | 11 | WASHER-HARD (7.2X14.5X2MM THK) | |
| M | 12 | 1 | **9X-2043** | 3 | SCREW-TRUSS HEAD (M6X1X14MM) | |

M-METRIC PART
Y-SEPARATE ILLUSTRATION

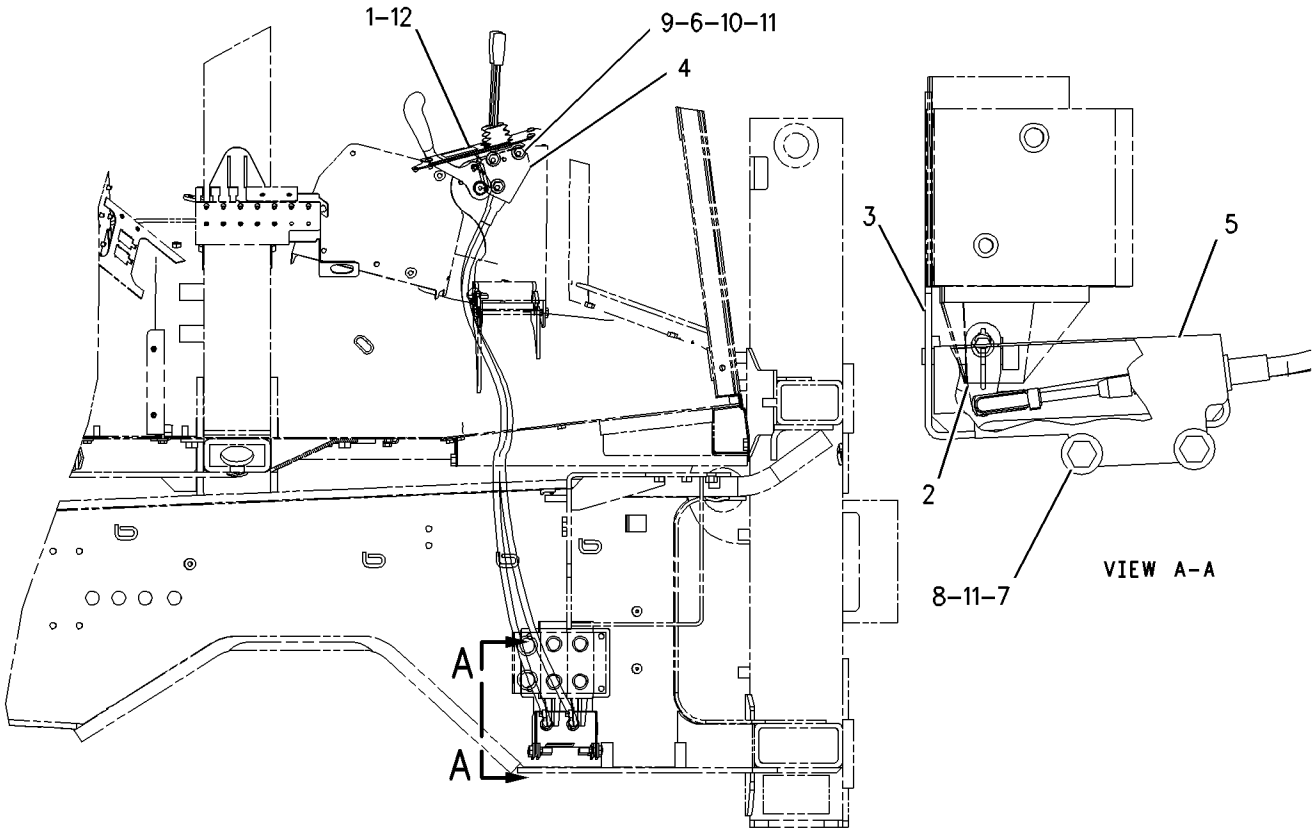


RIGHT SIDE VIEW

GRAPHIC #1 **<END>** g00955405

# HYDRAULIC SYSTEM

## *228-5731* CONTROL GP-HYDRAULIC HAND—STABILIZER

**S/N: BXC1-UP; DSX1-UP**
**PART OF 210-8919 STABILIZER AR**
**AN ATTACHMENT**

**SMCS-5063** **i01854904**

| NOTE | REF NO | GRAPHIC REF | PART NUMBER | QTY | PART NAME 1 2 3 4 5 6 (PRODUCT LEVEL) | SEE PAGE |
|---|---|---|---|---|---|---|
| | 1 | 1 | **210-8914** | 1 | PLATE | |
| | 2 | 1 | **210-8917** | 2 | LEVER GP-CONTROL VALVE (STABILIZER) | |
| | | 1 | **8T-0328** | 1 | WASHER-HARD (5.5X10X1MM THK) | |
| M | | 1 | **134-1374** | 1 | BOLT-SOCKET HEAD (M5X.8X20MM) | |
| M | | 1 | **136-0155** | 1 | SETSCREW | |
| | 3 | 1 | **217-3383** | 1 | BRACKET AS | |
| Y | 4 | 1 | **222-9436** | 2 | CONTROL GP-HANDLE | 351 |
| | 5 | 1 | **229-1203** | 1 | COVER | |
| M | 6 | 1 | **129-3178** | 3 | LOCKNUT (M6X1 THD) | |
| M | 7 | 1 | **5C-2890** | 4 | NUT (M6X1 THD) | |
| M | 8 | 1 | **5C-9553** | 4 | BOLT (M6X1X16MM) | |
| | 9 | 1 | **5P-4115** | 3 | WASHER-HARD (7.2X19X2MM THK) | |
| M | 10 | 1 | **7X-0465** | 3 | BOLT (M6X1X100MM) | |
| | 11 | 1 | **8T-4205** | 11 | WASHER-HARD (7.2X14.5X2MM THK) | |
| M | 12 | 1 | **9X-2043** | 3 | SCREW-TRUSS HEAD (M6X1X14MM) | |

M-METRIC PART
Y-SEPARATE ILLUSTRATION

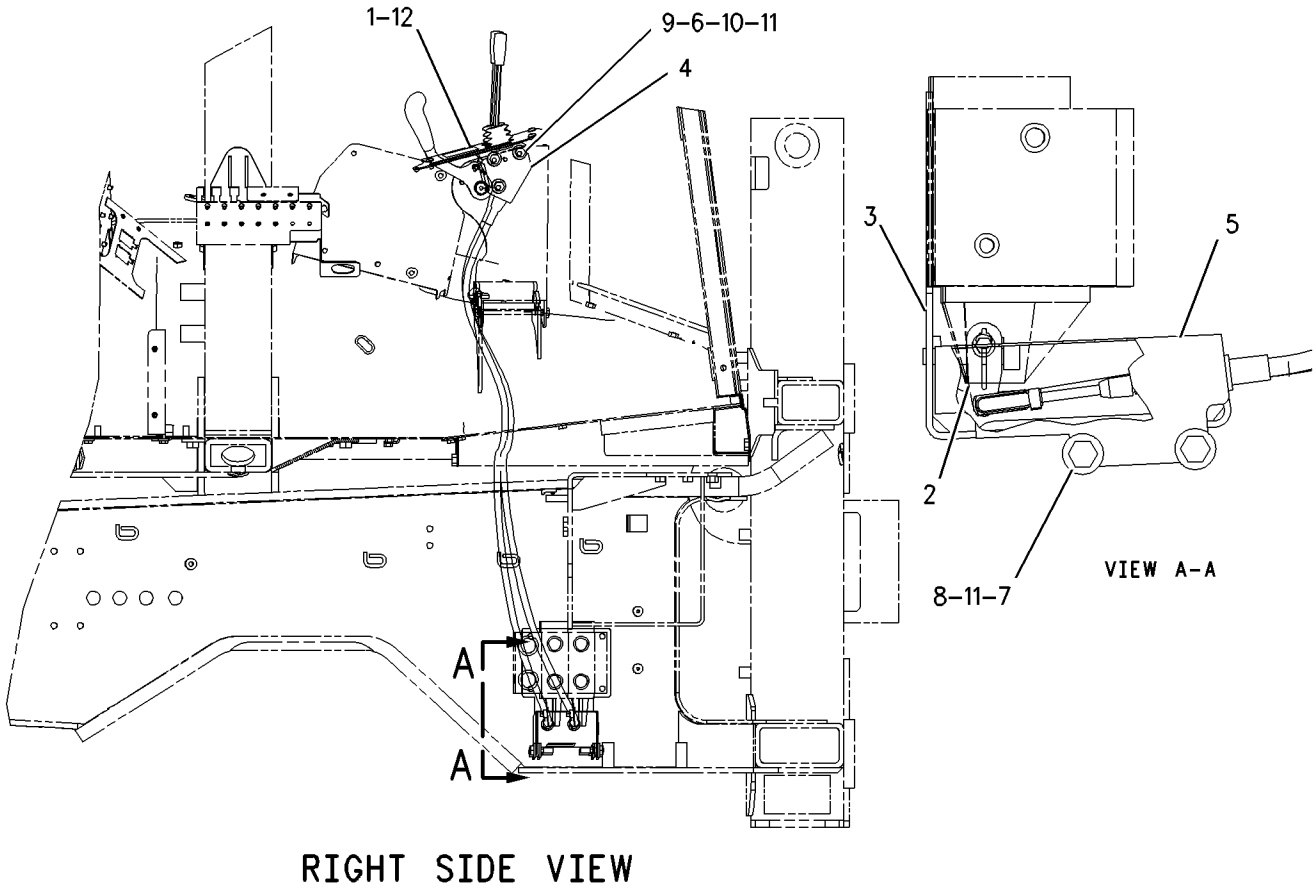


GRAPHIC #1 **<END>** g00955405

# HYDRAULIC SYSTEM

## *164-1540* CONTROL GP-HYDRAULIC PEDAL

**S/N: BXC1-UP; DSX1-UP**
**EXTENDABLE STICK**
**PART OF 240-3182, 240-3185 VALVE AR-BANK 5, 240-3183, 240-3186 VALVE AR-BANK 6, 204-9195, 204-9196, 204-9198, 204-9199 VALVE GP-AUXILIARY**
**AN ATTACHMENT**

**SMCS-5063** **i01565058**

| NOTE | REF NO | GRAPHIC REF | PART NUMBER | QTY | PART NAME 1 2 3 4 5 6 (PRODUCT LEVEL) | SEE PAGE |
|---|---|---|---|---|---|---|
| M | 1 | 1 | **6V-8335** | 1 | BOLT-SELF LOCKING (M10X1.5X40MM) | |
| | 2 | 1 | **8T-4815** | 1 | ROD END | |
| | 3 | 1 | **8T-6431** | 1 | ROD END (M10X1.50 THD) | |
| | 4 | 1 | **109-0533** | 1 | SEAL | |
| B | 5 | 1 | **133-8916** | 1 | FILM-INSTRUCTION (E-STICK) | |
| | 6 | 1 | **164-1541** | 1 | PEDAL AS-RH | |
| | 7 | 1 | **164-1544** | 1 | SUPPORT AS | |
| | 8 | 1 | **164-1547** | 1 | SHAFT AS | |
| | 9 | 1 | **164-1549** | 1 | ROD | |
| | 10 | 1 | **179-8235** | 1 | LOCKPIN | |
| B | 11 | 1 | **198-0098** | 1 | FILM (STANDARD STICK) | |
| M | 12 | 1 | **6V-7744** | 1 | LOCKNUT (M10X1.5 THD) | |
| | 13 | 1 | **8C-4987** | 1 | PIN-CLEVIS | |
| | 14 | 1 | **8M-3175** | 1 | WASHER-HARD (10.2X16X3MM THK) | |
| | 15 | 1 | **8T-4121** | 4 | WASHER-HARD (11X21X2.5MM THK) | |
| M | 16 | 1 | **8T-4133** | 2 | NUT (M10X1.5 THD) | |
| M | 17 | 1 | **8T-4186** | 1 | BOLT (M10X1.5X40MM) | |
| M | 18 | 1 | **8T-4195** | 2 | BOLT (M10X1.5X30MM) | |

B-USE AS REQUIRED
M-METRIC PART

*164-1540* **CONTROL GP-HYDRAULIC PEDAL** *(contd.)* **i01565058**

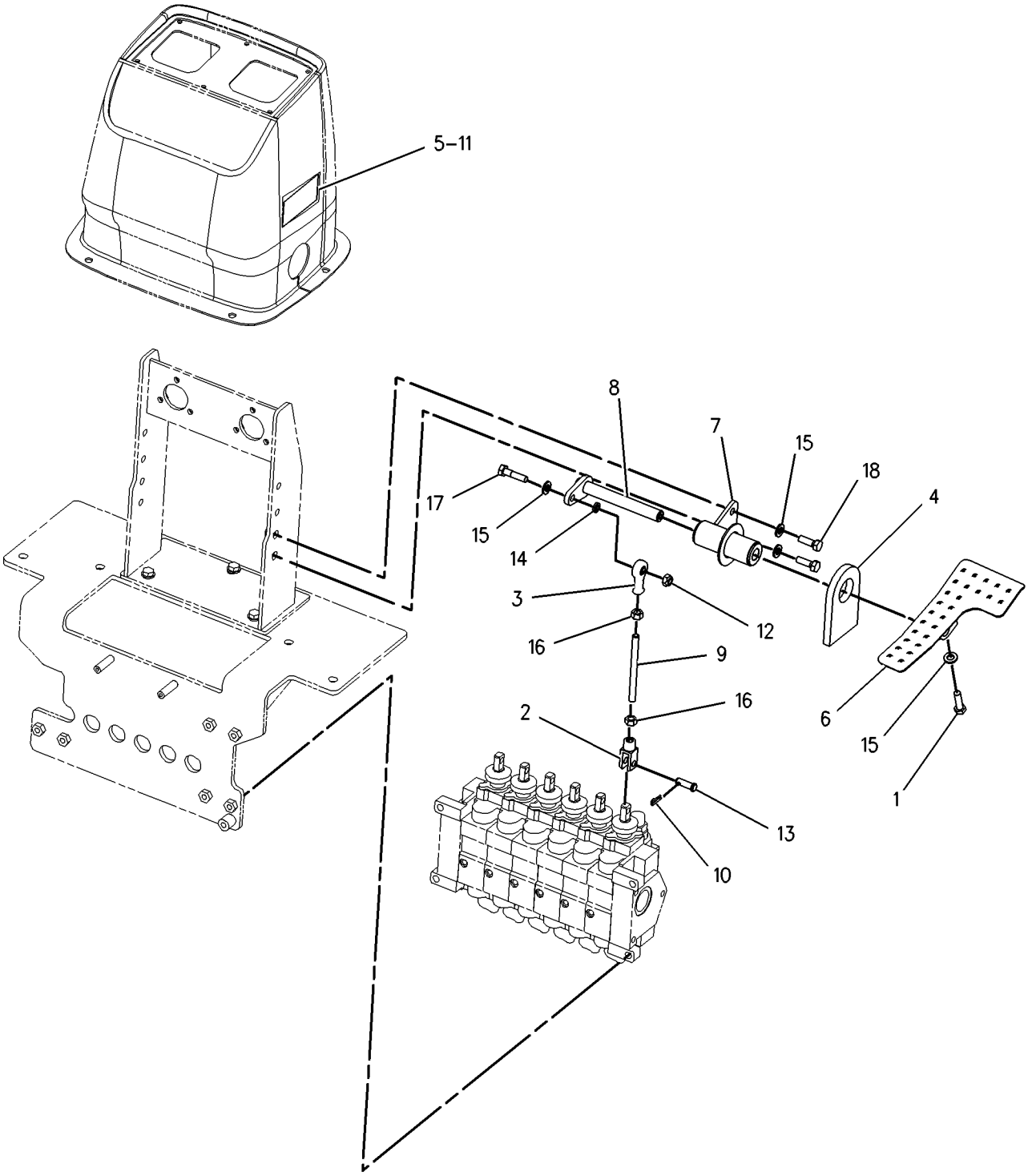


GRAPHIC #1 **<END>** g00813303

# HYDRAULIC SYSTEM

## *164-1550* CONTROL GP-HYDRAULIC PEDAL

**S/N: BXC1-UP; DSX1-UP**
**AUXILIARY**
**PART OF 240-3183, 240-3186 VALVE AR-BANK 6, 204-9197, 204-9200 VALVE GP-AUXILIARY**
**AN ATTACHMENT**

**SMCS-5063** **i01565056**

| NOTE | REF NO | GRAPHIC REF | PART NUMBER | QTY | PART NAME 1 2 3 4 5 6 (PRODUCT LEVEL) | SEE PAGE |
|---|---|---|---|---|---|---|
| M | 1 | 1 | **6V-8335** | 1 | BOLT-SELF LOCKING (M10X1.5X40MM) | |
| | 2 | 1 | **8T-4815** | 1 | ROD END | |
| | 3 | 1 | **8T-6431** | 1 | ROD END (M10X1.50 THD) | |
| | 4 | 1 | **109-0533** | 1 | SEAL | |
| | 5 | 1 | **164-1544** | 1 | SUPPORT AS | |
| | 6 | 1 | **164-1547** | 1 | SHAFT AS | |
| | 7 | 1 | **164-1549** | 1 | ROD | |
| | 8 | 1 | **164-1551** | 1 | PEDAL AS-LH | |
| | 9 | 1 | **179-8235** | 1 | LOCKPIN | |
| M | 10 | 1 | **6V-7744** | 1 | LOCKNUT (M10X1.5 THD) | |
| | 11 | 1 | **8C-4987** | 1 | PIN-CLEVIS | |
| | 12 | 1 | **8M-3175** | 1 | WASHER-HARD (10.2X16X3MM THK) | |
| | 13 | 1 | **8T-4121** | 6 | WASHER-HARD (11X21X2.5MM THK) | |
| M | 14 | 1 | **8T-4133** | 4 | NUT (M10X1.5 THD) | |
| M | 15 | 1 | **8T-4186** | 1 | BOLT (M10X1.5X40MM) | |
| M | 16 | 1 | **8T-4195** | 2 | BOLT (M10X1.5X30MM) | |

M-METRIC PART

*164-1550* **CONTROL GP-HYDRAULIC PEDAL** *(contd.)* **i01565056**

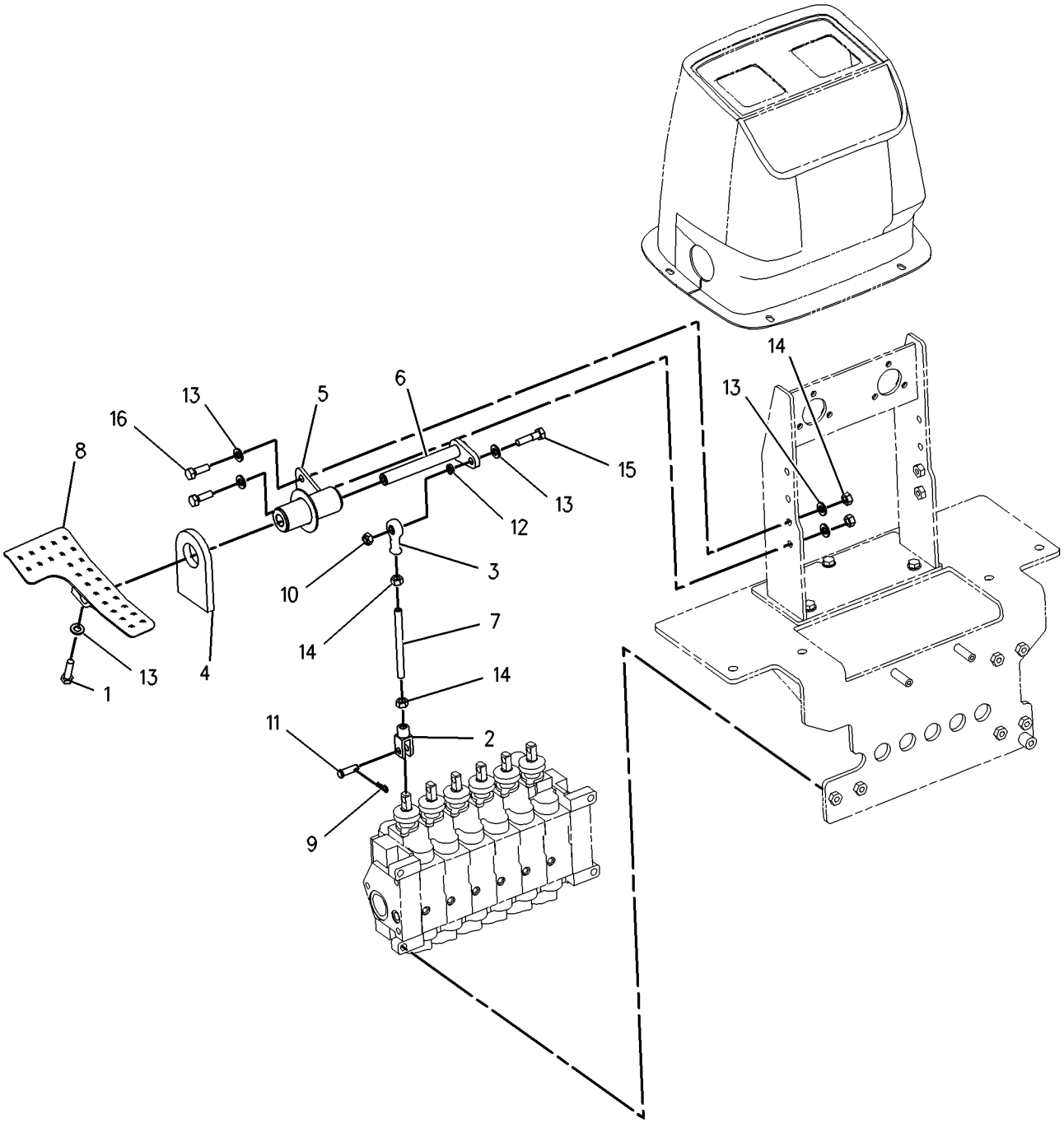


GRAPHIC #1 **<END>** g00745736

# HYDRAULIC SYSTEM

## *164-1430* CONVERSION GP-HYD HAND CONTROL—KIT

**S/N: BXC1-UP; DSX1-UP**
**EXCAVATOR TWO LEVER**
**AN ATTACHMENT**

**SMCS-5063** **i01472254**

| NOTE | REF NO | GRAPHIC REF | PART NUMBER | QTY | PART NAME 1 2 3 4 5 6 (PRODUCT LEVEL) | SEE PAGE |
|---|---|---|---|---|---|---|
| Y | 1 | 1 | *164-1420* | 1 | CONTROL GP-HYDRAULIC HAND | 354 |
| Y-SEPARATE ILLUSTRATION | | | | | | |

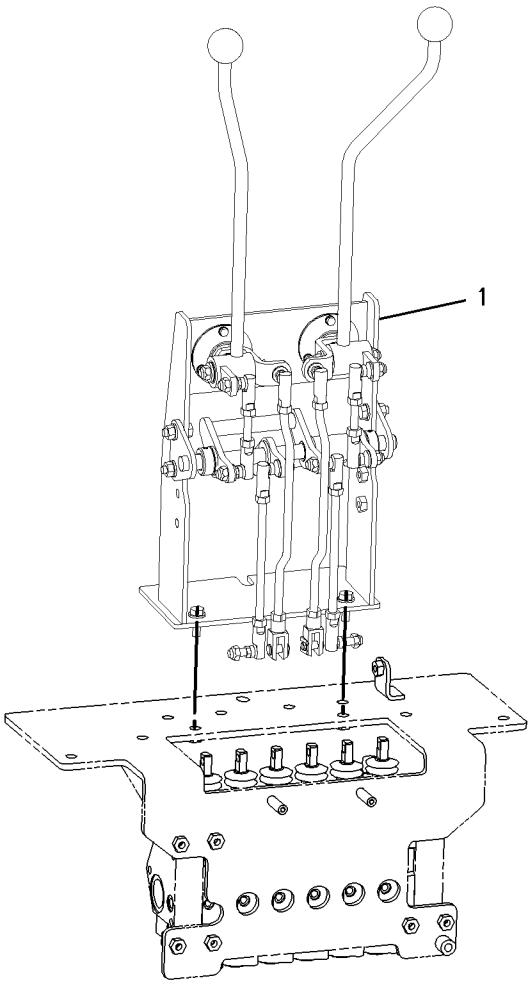


GRAPHIC #1 **<END>** g00770742

# HYDRAULIC SYSTEM

## 132-8769 COUPLING GP

**S/N: BXC1-UP; DSX1-UP**
**AN ATTACHMENT**

**SMCS-5057** **i01499420**

| NOTE | REF NO | GRAPHIC REF | PART NUMBER | QTY | PART NAME 1 2 3 4 5 6 (PRODUCT LEVEL) | SEE PAGE |
|---|---|---|---|---|---|---|
| | 1 | 1 | **106-0406** | 1 | COUPLING | |
| | 2 | 1 | **106-0401** | 1 | COUPLING | |

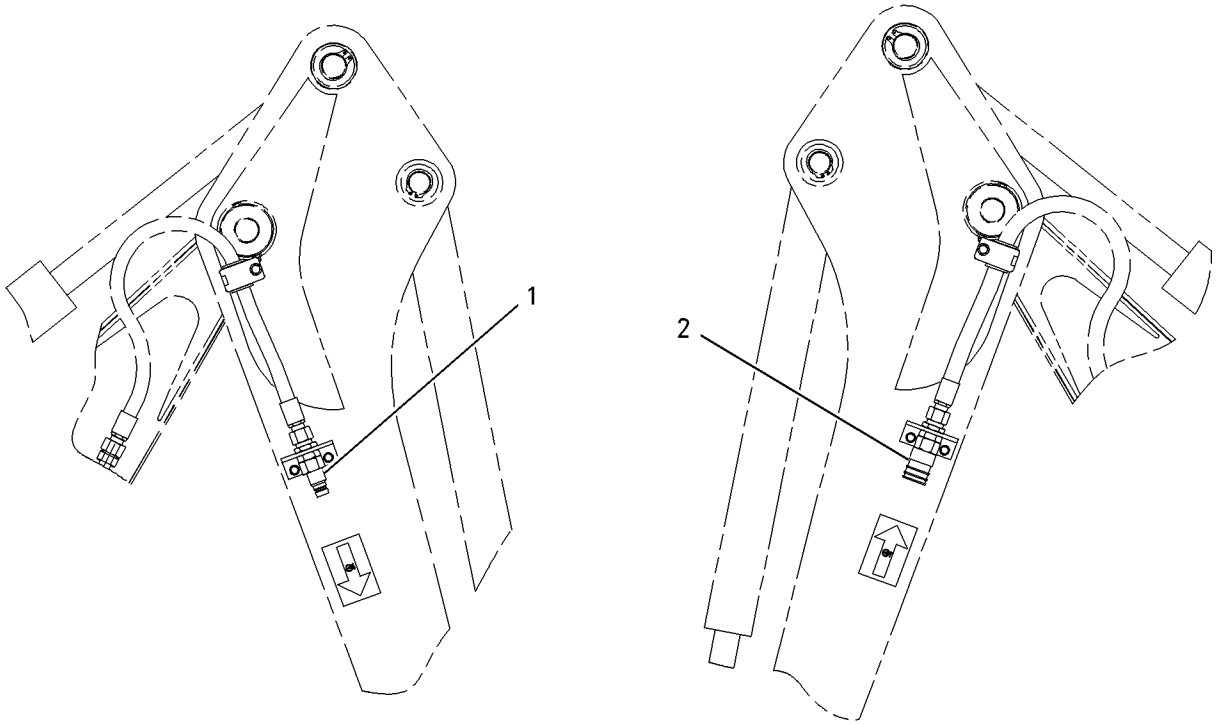


GRAPHIC #1 **<END>** g00778121

# HYDRAULIC SYSTEM

## 202-2236 COVER & VALVE GP-BANK

**S/N: BXC1-UP; DSX1-UP**

**PART OF 203-5486 VALVE GP-BANK 4, 203-5487 VALVE GP-BANK 5, 203-5488 VALVE GP-BANK 6**

**AN ATTACHMENT**

**SMCS-5051, 5117** **i01700734**

| NOTE | REF NO | GRAPHIC REF | PART NUMBER | QTY | PART NAME 1 2 3 4 5 6 (PRODUCT LEVEL) | SEE PAGE |
|---|---|---|---|---|---|---|
| | 1 | 1 | **9S-8002** | 1 | PLUG | |
| | 2 | 1 | **197-3709** | 1 | VALVE GP-RELIEF | |
| | | 1 | **4K-1388** | 1 | SEAL-O-RING | |
| | | 1 | **5K-9090** | 1 | SEAL-O-RING | |
| | | 1 | **6E-0358** | 1 | RING-BACKUP | |
| | 3 | 1 | **197-4938** | 1 | ORFICE | |
| | 4 | 1 | **9S-8004** | 1 | PLUG | |
| | 5 | 1 | **197-6415** | 1 | PLUG | |
| | 6 | 1 | **6E-4317** | 1 | SPRING | |
| | 7 | 1 | **9S-8006** | 1 | PLUG | |
| | 8 | 1 | **2M-9780** | 1 | SEAL-O-RING | |
| | 9 | 1 | **3J-7354** | 1 | SEAL-O-RING | |

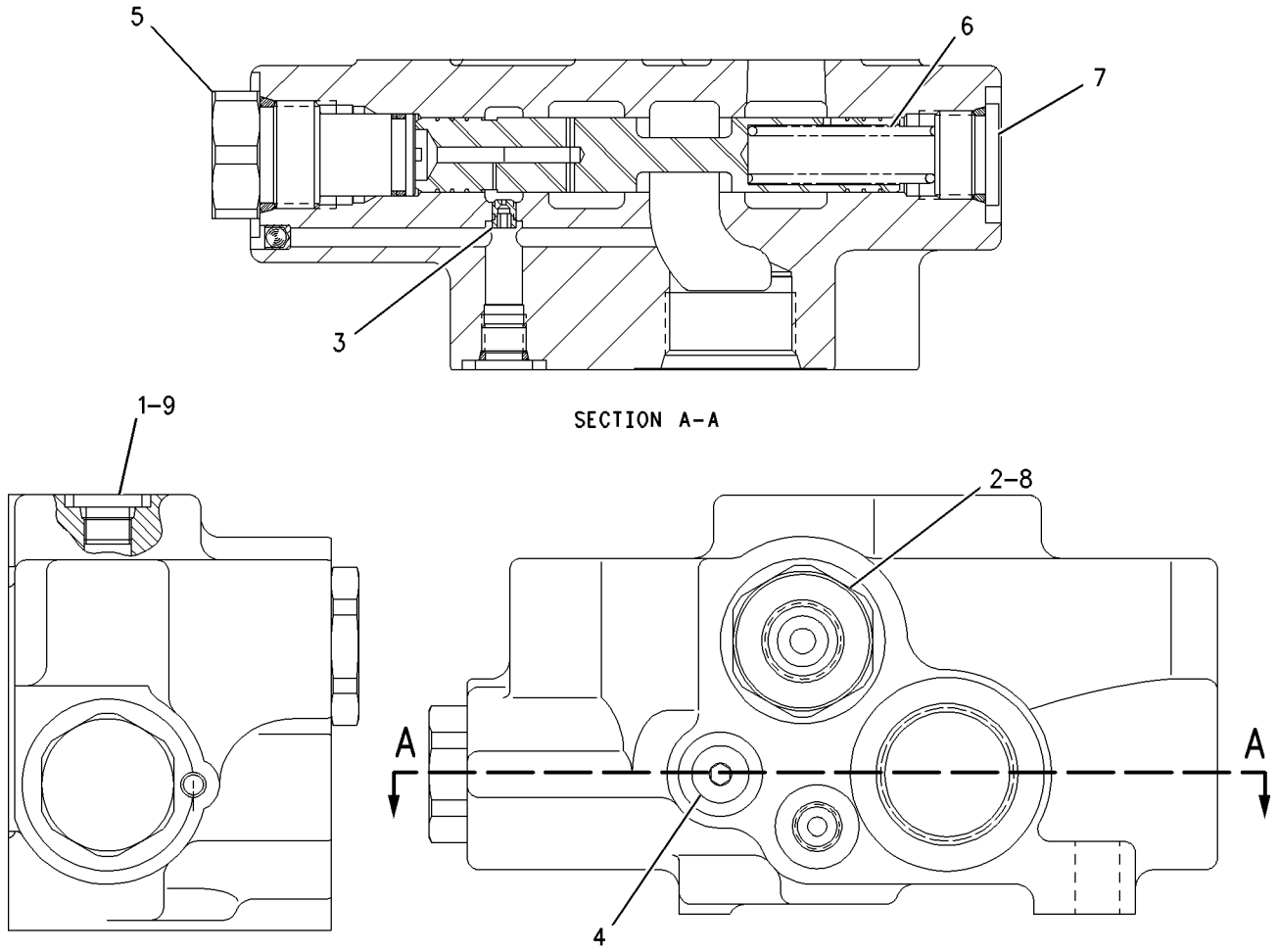


GRAPHIC #1 **<END>** g00875845

# HYDRAULIC SYSTEM

## 206-0514 CYLINDER GP-BACKHOE BUCKET

**S/N: BXC1-UP; DSX1-UP**
**88.9MM BORE X 854MM STROKE**
**PART OF 240-8683, 240-8684, 240-8685, 240-8686, 240-8687, 240-8688, 240-8693, 240-8694, 240-8695, 240-8696, 240-8697, 240-8698 BACKHOE AR-STANDARD STICK AN ATTACHMENT**

**SMCS-5457** **i01644505**

| NOTE | REF NO | GRAPHIC REF | PART NUMBER | QTY | PART NAME 1 2 3 4 5 6 (PRODUCT LEVEL) | SEE PAGE |
|---|---|---|---|---|---|---|
| | 1 | 1 | **180-6603** | 1 | PISTON | |
| | 2 | 1 | **187-3510** | 1 | HEAD | |
| | 3 | 1 | **206-0513** | 1 | CYLINDER AS | |
| | | 1 | **6V-8398** | 1 | SEAL-O-RING | |
| | 3A | 1 | **9R-7960** | 2 | BEARING-SLEEVE | |
| | 4 | 1 | **209-9241** | 1 | ROD AS | |
| | 4A | 1 | **9R-0162** | 2 | BEARING | |
| | 5 | 1 | **106-1251** | 1 | WASHER | |
| | 6 | 1 | **167-2201** | 1 | SEAL AS-BUFFER | |
| | 7 | 1 | **167-2312** | 1 | SEAL-U-CUP | |
| | 8 | 1 | **2H-3931** | 1 | SEAL-O-RING | |
| | 9 | 1 | **2H-4145** | 1 | SEAL-O-RING | |
| | 10 | 1 | **4J-9224** | 1 | RING-BACKUP | |
| | 11 | 1 | **4T-8054** | 1 | SEAL AS | |
| | 12 | 1 | **5J-8156** | 1 | WIPER-ROD | |
| | 13 | 1 | **7J-9885** | 1 | RING-WEAR | |
| | 14 | 1 | **8T-0785** | 1 | RING-WEAR | |
| M | 15 | 1 | **8T-1605** | 1 | BOLT (M36X4X100MM) | |

M-METRIC PART

## 206-0514 CYLINDER GP-BACKHOE BUCKET *(contd. )* i01644505

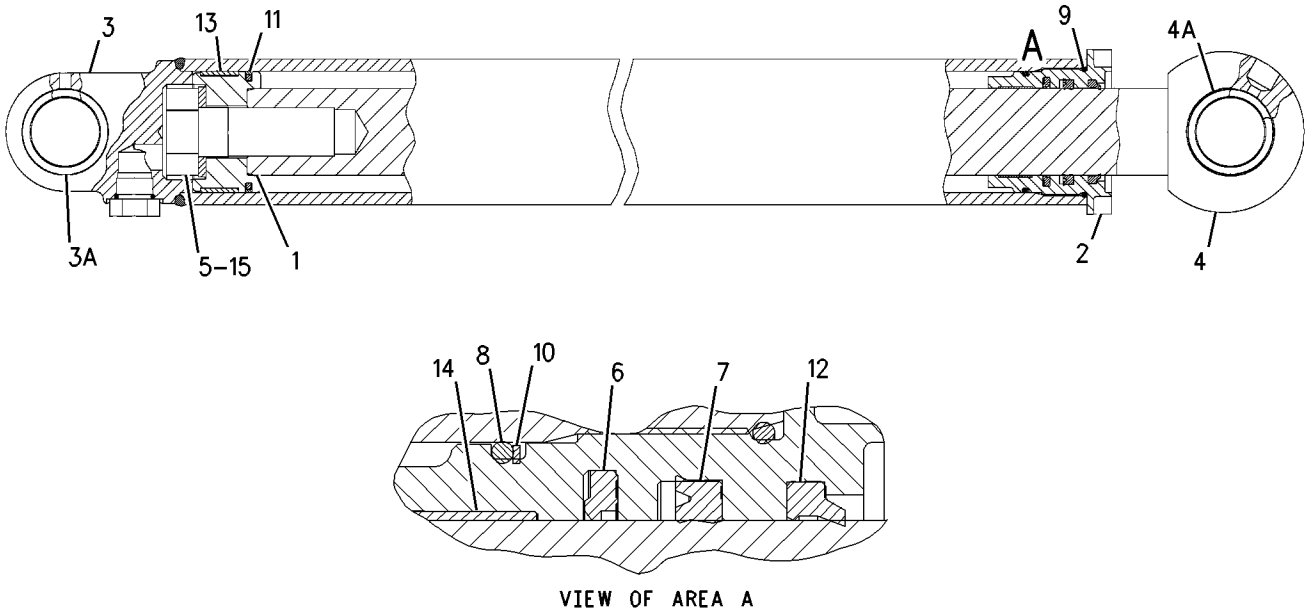


GRAPHIC #1 **<END>** g00850067

# HYDRAULIC SYSTEM

## 206-0518 CYLINDER GP-BACKHOE BUCKET—EXTENDABLE STICK

**S/N: BXC1-UP; DSX1-UP**
**88.9MM BORE X 854MM STROKE**
**PART OF 240-8490, 240-8491, 240-8492, 240-8493, 240-8504, 240-8505, 240-8506, 240-8507, 240-8689, 240-8690, 240-8691, 240-8692, 240-8699, 240-8700, 240-8701, 240-8702 BACKHOE AR-EXTENDABLE STICK**
**AN ATTACHMENT**

**SMCS-5457** **i01584121**

| NOTE | REF NO | GRAPHIC REF | PART NUMBER | QTY | PART NAME 1 2 3 4 5 6 (PRODUCT LEVEL) | SEE PAGE |
|---|---|---|---|---|---|---|
| | 1 | 1 | **180-6111** | 1 | ROD AS | |
| | 1A | 1 | **9R-0162** | 2 | BEARING | |
| | 2 | 1 | **180-6603** | 1 | PISTON | |
| | 3 | 1 | **187-3510** | 1 | HEAD | |
| | 4 | 1 | **206-0517** | 1 | CYLINDER AS | |
| | | 1 | **6V-8398** | 1 | SEAL-O-RING | |
| | | 1 | **180-6110** | 1 | CAP | |
| | 5 | 1 | **106-1251** | 1 | WASHER | |
| | 6 | 1 | **167-2201** | 1 | SEAL AS-BUFFER | |
| | 7 | 1 | **167-2312** | 1 | SEAL-U-CUP | |
| | 8 | 1 | **2H-3931** | 1 | SEAL-O-RING | |
| | 9 | 1 | **2H-4145** | 1 | SEAL-O-RING | |
| | 10 | 1 | **4J-9224** | 1 | RING-BACKUP | |
| | 11 | 1 | **4T-8054** | 1 | SEAL AS | |
| | 12 | 1 | **5J-8156** | 1 | WIPER-ROD | |
| | 13 | 1 | **7J-9885** | 1 | RING-WEAR | |
| | 14 | 1 | **8T-0785** | 1 | RING-WEAR | |
| M | 15 | 1 | **8T-1605** | 1 | BOLT (M36X4X100MM) | |

M-METRIC PART

**206-0518 CYLINDER GP-BACKHOE BUCKET** *(contd. )* **i01584121**

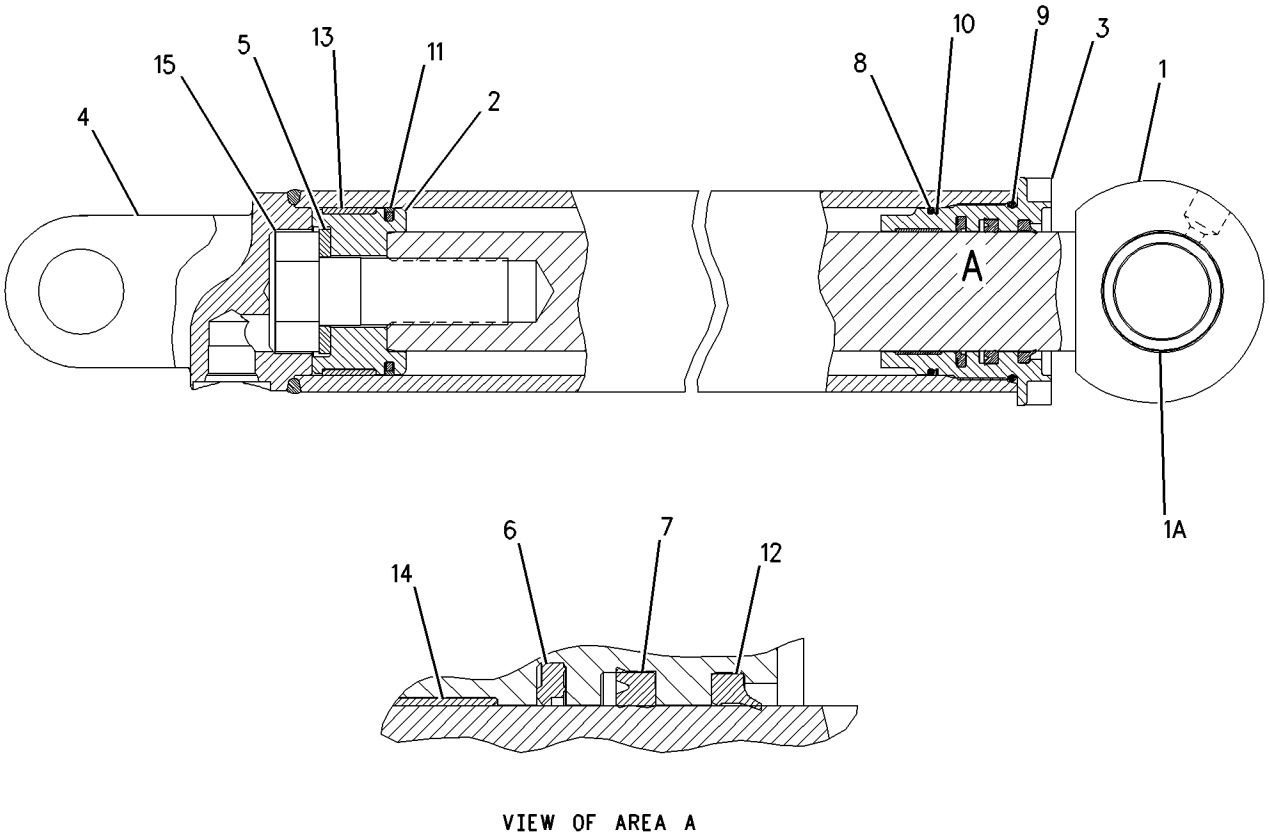


GRAPHIC #1 **<END>** g00822004

# HYDRAULIC SYSTEM

## 206-3630 CYLINDER GP-BOOM

**S/N: BXC1-UP; DSX1-UP**
**120.7MM BORE X 1000MM STROKE**
**PART OF 237-9297, 237-9298 HYDRAULIC AR**

**SMCS-5456** **i01981681**

| NOTE | REF NO | GRAPHIC REF | PART NUMBER | QTY | PART NAME 1 2 3 4 5 6 (PRODUCT LEVEL) | SEE PAGE |
|---|---|---|---|---|---|---|
| | 1 | 1 | **206-3629** | 1 | CYLINDER AS | |
| | 1A | 1 | **6V-9746** | 1 | SEAL-O-RING | |
| | 1B | 1 | **9R-0139** | 1 | BEARING-SLEEVE | |
| | 2 | 1 | **170-9066** | 1 | BOLT (1 1/2-12X101.6MM) | |
| | 3 | 1 | **3S-6162** | 1 | WASHER-HARD (40.5X67X6MM THK) | |
| | 4 | 1 | **8T-8390** | 1 | RING-WEAR | |
| | 5 | 1 | **4T-8588** | 1 | SEAL AS | |
| | 6 | 1 | **9X-7260** | 1 | RING-WEAR | |
| | 7 | 1 | **167-2202** | 1 | SEAL AS-BUFFER | |
| | 8 | 1 | **167-2310** | 1 | SEAL-U-CUP | |
| | 9 | 1 | **191-6558** | 1 | HEAD | |
| | 10 | 1 | **231-3540** | 1 | SEAL-WIPER | |
| | 11 | 1 | **175-7903** | 1 | SEAL-O-RING | |
| | 12 | 1 | **2J-3961** | 1 | RING-BACKUP | |
| R | 13 | 1 | **159-5848** | 1 | ROD AS | |
| | 13A | 1 | **9R-0139** | 2 | BEARING-SLEEVE | |
| | 14 | 1 | **154-8051** | 1 | PISTON | |
| | 15 | 1 | **9T-5444** | 1 | PLUNGER | |
| | 16 | 1 | **6L-6208** | 1 | SPRING | |
| | 17 | 1 | **175-7902** | 1 | SEAL-O-RING | |
| | | | | | AVAILABLE REPAIR KIT(S): | |
| | | | **235-0973** | 1 | KIT-SEAL | |

R-REMFG PART MAY BE AVAILABLE

**206-3630 CYLINDER GP-BOOM** *(contd. )* **i01981681**

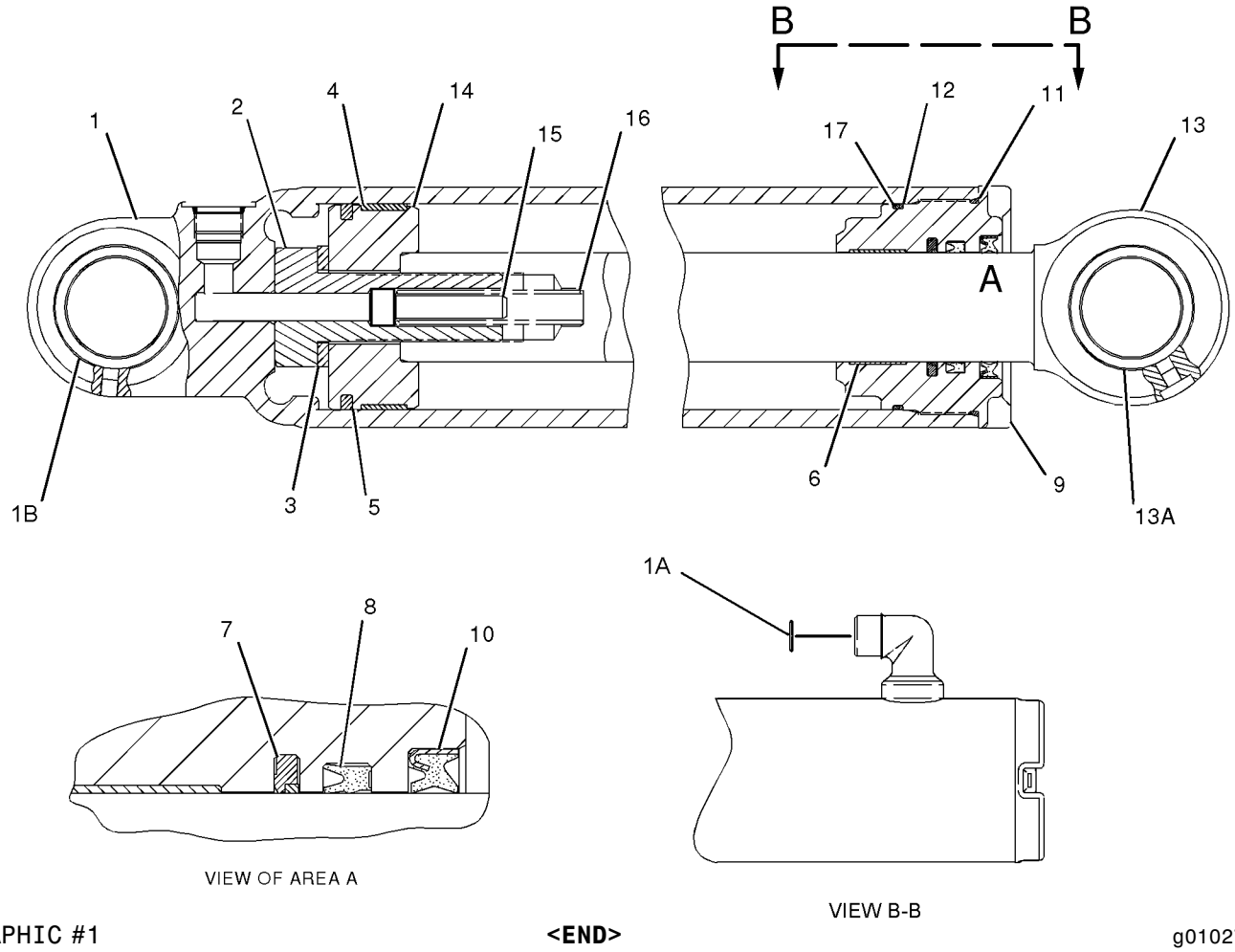


GRAPHIC #1 **<END>** g01027454

# HYDRAULIC SYSTEM

## *155-6586* CYLINDER GP-EXTENDABLE STICK

**S/N: BXC1-UP; DSX1-UP**
**PART OF 184-6786, 184-9754 STICK GP-EXTENDABLE**
**AN ATTACHMENT**

**SMCS-5486** **i01961861**

| NOTE | PART NUMBER | QTY | PART NAME 1 2 3 4 5 6 (PRODUCT LEVEL) | SEE PAGE |
|---|---|---|---|---|
| Y | **191-7725** | 1 | CYLINDER GP-EXTENDABLE STICK | 379 |
| Y | *162-2351* | 1 | LINES GP-EXTENDABLE STICK | 445 |

Y-SEPARATE ILLUSTRATION

**<END>**

# HYDRAULIC SYSTEM

## 191-7725 CYLINDER GP-EXTENDABLE STICK

**S/N: BXC1-UP; DSX1-UP**
**76.2MM BORE X 1067MM STROKE**
**PART OF 155-6586 CYLINDER GP-EXTENDABLE STICK**
**AN ATTACHMENT**

**SMCS-5486** **i01864178**

| NOTE | REF NO | GRAPHIC REF | PART NUMBER | QTY | PART NAME 1 2 3 4 5 6 (PRODUCT LEVEL) | SEE PAGE |
|---|---|---|---|---|---|---|
| | 1 | 1 | **9T-2212** | 1 | PISTON | |
| | 2 | 1 | **164-7176** | 1 | ROD AS | |
| | 3 | 1 | **191-7727** | 1 | CYLINDER AS | |
| | | 1 | **6V-8398** | 1 | SEAL-O-RING | |
| | 4 | 1 | **167-2186** | 1 | SEAL AS-BUFFER | |
| | 5 | 1 | **167-2294** | 1 | SEAL-U-CUP | |
| | 6 | 1 | **226-8202** | 1 | SEAL-WIPER | |
| M | 7 | 1 | **173-9779** | 1 | BOLT-HEX HEAD (M24X3.0X80MM) | |
| | 8 | 1 | **175-7896** | 1 | SEAL-O-RING | |
| | 9 | 1 | **191-6159** | 1 | HEAD | |
| | 10 | 1 | **4T-6780** | 1 | RING-WEAR | |
| | 11 | 1 | **5H-8848** | 1 | SEAL-O-RING | |
| | 12 | 1 | **6J-1972** | 1 | SEAL AS | |
| | 13 | 1 | **6J-5731** | 1 | RING-BACKUP | |
| | 14 | 1 | **6J-5733** | 1 | RING-WEAR | |
| | 15 | 1 | **6V-8237** | 1 | WASHER (26X44X4MM THK) | |

M-METRIC PART

## 191-7725 CYLINDER GP-EXTENDABLE STICK *(contd.)* i01864178

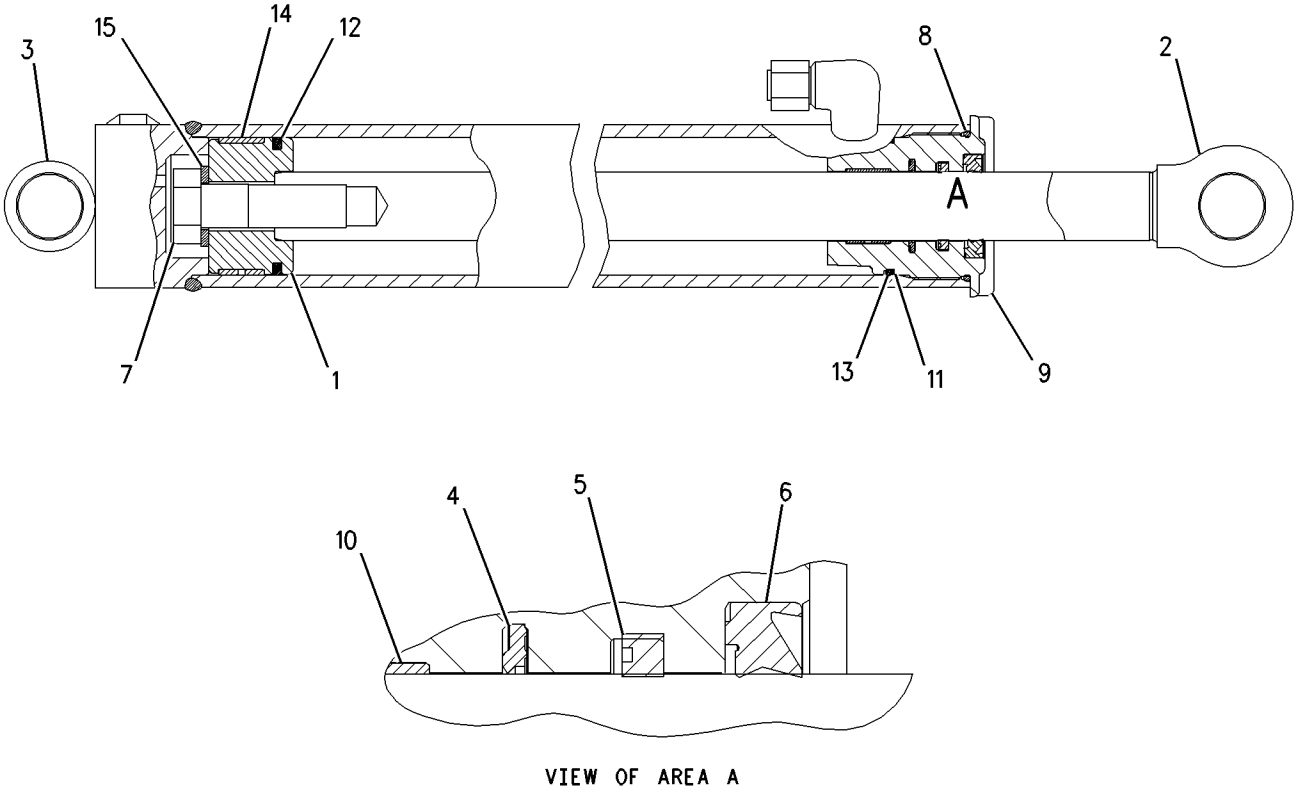


GRAPHIC #1 **<END>** g00950327

# HYDRAULIC SYSTEM

## 192-3791 CYLINDER GP-LIFT

**S/N: BXC1-UP; DSX1-UP**
**85MM BORE X 699.2MM STROKE**
**PART OF 237-9297, 237-9298 HYDRAULIC AR**

**SMCS-5102** **i01982238**

| NOTE | REF NO | GRAPHIC REF | PART NUMBER | QTY | PART NAME 1 2 3 4 5 6 (PRODUCT LEVEL) | SEE PAGE |
|---|---|---|---|---|---|---|
| | 1 | 1 | **119-2110** | 1 | ROD AS | |
| | 1A | 1 | **9R-0321** | 2 | BEARING-SLEEVE | |
| | 2 | 1 | **185-1502** | 1 | PISTON | |
| | 3 | 1 | **192-3792** | 1 | CYLINDER AS | |
| | 3A | 1 | **9R-0153** | 2 | BEARING-SLEEVE | |
| | 3B | 1 | **7J-9108** | 1 | SEAL-O-RING | |
| | 4 | 1 | **192-3849** | 1 | HEAD | |
| | 5 | 1 | **141-0711** | 1 | RING-WEAR | |
| | 6 | 1 | **167-2195** | 1 | SEAL AS-BUFFER | |
| | 7 | 1 | **167-2304** | 1 | SEAL-U-CUP | |
| | 8 | 1 | **229-9382** | 1 | SEAL-WIPER | |
| M | 9 | 1 | **173-9683** | 1 | BOLT (M30X3.5X90MM) | |
| | 10 | 1 | **184-1687** | 1 | SEAL AS | |
| | 11 | 1 | **1H-7339** | 1 | SEAL-O-RING | |
| | 12 | 1 | **2H-6338** | 1 | SEAL-O-RING | |
| | 13 | 1 | **4T-5613** | 1 | RING-WEAR | |
| | 14 | 1 | **8J-2574** | 1 | RING-BACKUP | |
| | 15 | 1 | **9X-8399** | 1 | WASHER (33X56X6MM THK) | |

M-METRIC PART

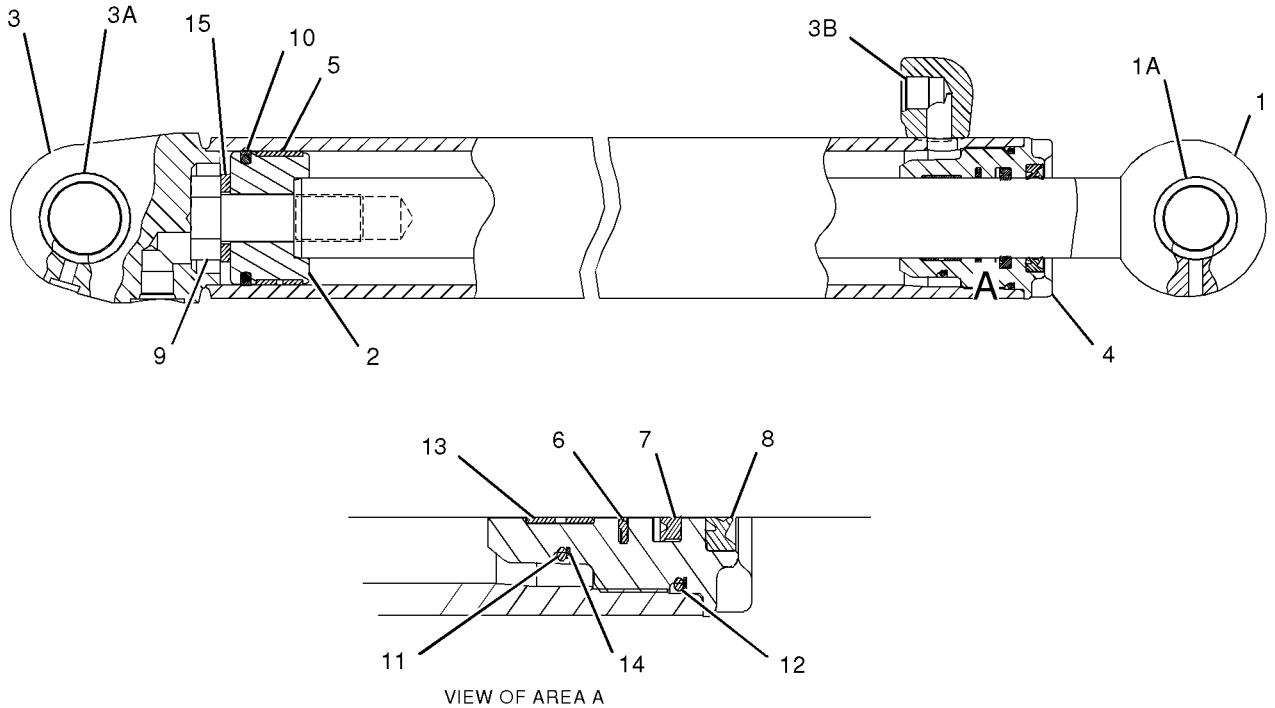


GRAPHIC #1 **<END>** g01027301

# HYDRAULIC SYSTEM

## 185-1839 CYLINDER GP-MULTIPURPOSE BUKT

**S/N: BXC1-UP; DSX1-UP**
**76.2MM BORE X 260MM STROKE**
**PART OF 111-8634, 111-8635, 112-0938, 112-0939, 124-0486, 124-0487, 124-0488, 124-0489, 164-4659, 208-0827 BUCKET AR-MULTIPURPOSE AN ATTACHMENT**

**SMCS-5457** **i01863206**

| NOTE | REF NO | GRAPHIC REF | PART NUMBER | QTY | PART NAME 1 2 3 4 5 6 (PRODUCT LEVEL) | SEE PAGE |
|---|---|---|---|---|---|---|
| | 1 | 1 | **6E-0122** | 1 | HEAD | |
| | 2 | 1 | **9T-2212** | 1 | PISTON | |
| R | 3 | 1 | **9T-4008** | 1 | ROD AS | |
| | 3A | 1 | **9T-4007** | 2 | BEARING | |
| R | 4 | 1 | **9T-4009** | 1 | CYLINDER AS | |
| | 5 | 1 | **167-2186** | 1 | SEAL AS-BUFFER | |
| | 6 | 1 | **167-2294** | 1 | SEAL-U-CUP | |
| | 7 | 1 | **226-8202** | 1 | SEAL-WIPER | |
| | 8 | 1 | **1H-7339** | 1 | SEAL-O-RING | |
| | 9 | 1 | **4T-6780** | 1 | RING-WEAR | |
| | 10 | 1 | **5P-8250** | 1 | WASHER (28X49X5MM THK) | |
| | 11 | 1 | **6F-7037** | 1 | BOLT (1-14X3.25IN) | |
| | 12 | 1 | **6J-1972** | 1 | SEAL AS | |
| | 13 | 1 | **6J-5733** | 1 | RING-WEAR | |
| | 14 | 1 | **8J-2574** | 1 | RING-BACKUP | |
| | | | | | AVAILABLE REPAIR KIT(S): | |
| | | | **235-0354** | 1 | KIT-SEAL | |

R-REMFG PART MAY BE AVAILABLE

**185-1839 CYLINDER GP-MULTIPURPOSE BUKT** *(contd.)* **i01863206**

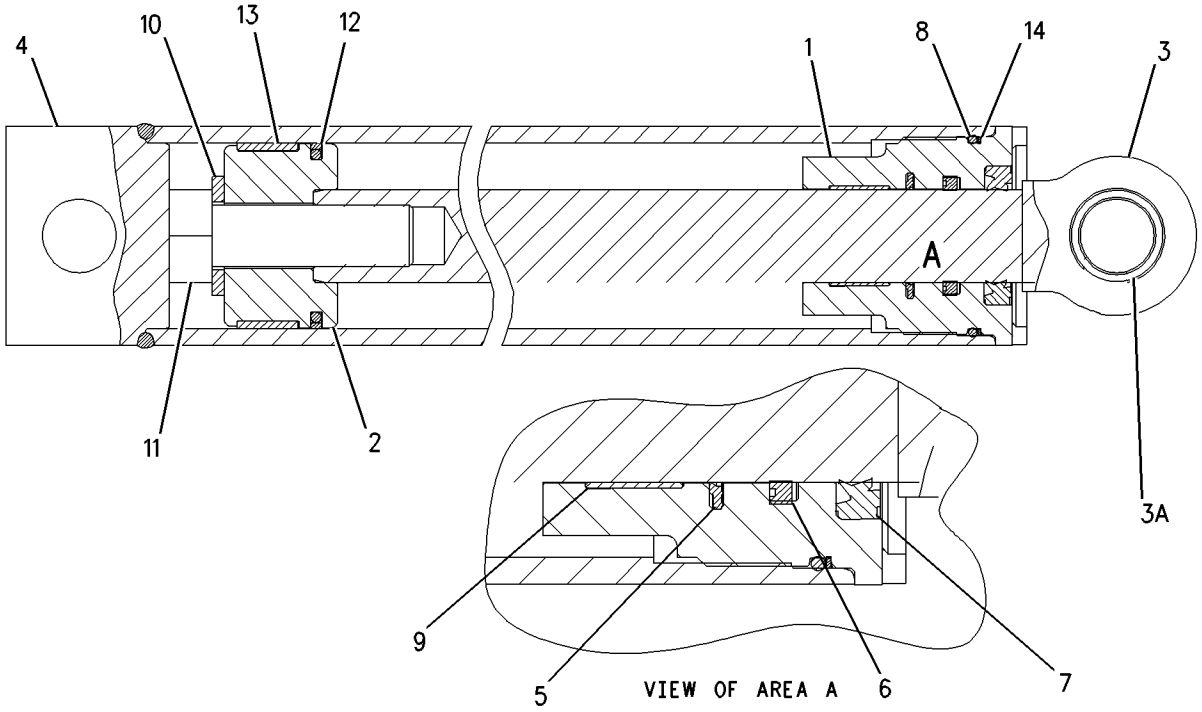


GRAPHIC #1 **<END>** g00949845

# HYDRAULIC SYSTEM

## *173-4565* CYLINDER GP-STABILIZER

**S/N: BXC1-UP; DSX1-UP**
**70MM (2.76IN) BORE X 760MM (29.92IN) STROKE**
**PART OF 237-9297, 237-9298 HYDRAULIC AR**

**SMCS-5468** **i01991667**

| NOTE | REF NO | GRAPHIC REF | PART NUMBER | QTY | PART NAME 1 2 3 4 5 6 (PRODUCT LEVEL) | SEE PAGE |
|---|---|---|---|---|---|---|
| | 1 | 1 | **126-6951** | 1 | CYLINDER AS | |
| | | 1 | **9R-7215** | 1 | BEARING | |
| | 2 | 1 | **5B-9385** | 1 | BOLT (1-14X2.5 IN) | |
| | 3 | 1 | **5P-8250** | 1 | WASHER (28X49X5MM THK) | |
| | 4 | 1 | **8J-0112** | 1 | RING-WEAR | |
| | 5 | 1 | **5J-7010** | 1 | SEAL AS | |
| | 6 | 1 | **9T-0805** | 1 | PISTON | |
| | 7 | 1 | **175-7895** | 1 | SEAL-O-RING | |
| | 8 | 1 | **4J-9225** | 1 | RING-BACKUP | |
| | 9 | 1 | **151-5349** | 1 | HEAD | |
| | 10 | 1 | **126-6953** | 1 | ROD AS | |
| | 11 | 1 | **4T-6907** | 1 | RING-WEAR | |
| | 12 | 1 | **167-2300** | 1 | SEAL-U-CUP | |
| | 13 | 1 | **167-2191** | 1 | SEAL AS-BUFFER | |
| | 14 | 1 | **231-3539** | 1 | SEAL-WIPER | |

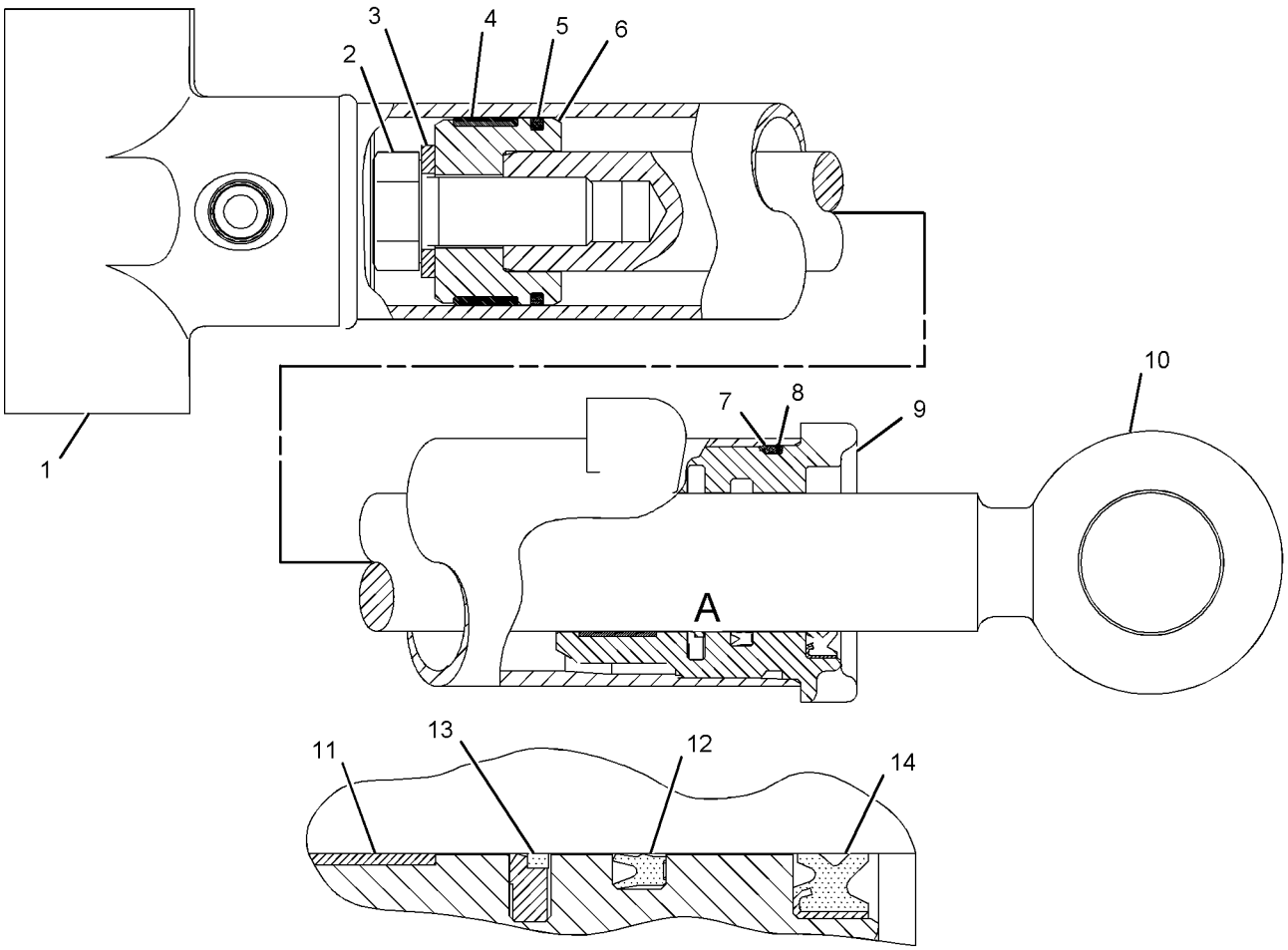


VIEW OF AREA A

GRAPHIC #1 **<END>** g01031551

# HYDRAULIC SYSTEM

## *235-9831* CYLINDER GP-STICK

**S/N: BXC1-UP; DSX1-UP**
**114.3MM BORE X 700MM STROKE**
**PART OF 237-9297, 237-9298 HYDRAULIC AR**

**SMCS-5458** **i01994438**

| NOTE | REF NO | GRAPHIC REF | PART NUMBER | QTY | PART NAME 1 2 3 4 5 6 (PRODUCT LEVEL) | SEE PAGE |
|---|---|---|---|---|---|---|
| | 1 | 1 | **235-9832** | 1 | HEAD | |
| | 2 | 1 | **235-9833** | 1 | PISTON | |
| | 3 | 1 | **235-9835** | 1 | ROD AS | |
| | 3A | 1 | **9R-0139** | 2 | BEARING-SLEEVE | |
| | 4 | 1 | **244-6869** | 1 | CYLINDER AS | |
| | 4A | 1 | **6V-8398** | 1 | SEAL-O-RING | |
| | 4B | 1 | **9R-0139** | 2 | BEARING-SLEEVE | |
| | 5 | 1 | **167-2201** | 1 | SEAL AS-BUFFER | |
| | 6 | 1 | **167-2312** | 1 | SEAL-U-CUP | |
| | 7 | 1 | **175-7902** | 1 | SEAL-O-RING | |
| | 8 | 1 | **225-3281** | 1 | SEAL-WIPER | |
| | 9 | 1 | **4J-3745** | 1 | RING-WEAR | |
| | 10 | 1 | **4J-9220** | 1 | RING-BACKUP | |
| | 11 | 1 | **4M-0189** | 1 | SEAL-O-RING | |
| | 12 | 1 | **5J-4986** | 1 | SEAL AS | |
| | 13 | 1 | **5J-7878** | 1 | NUT-SELF LOCKING | |
| | 14 | 1 | **8T-0785** | 1 | RING-WEAR | |

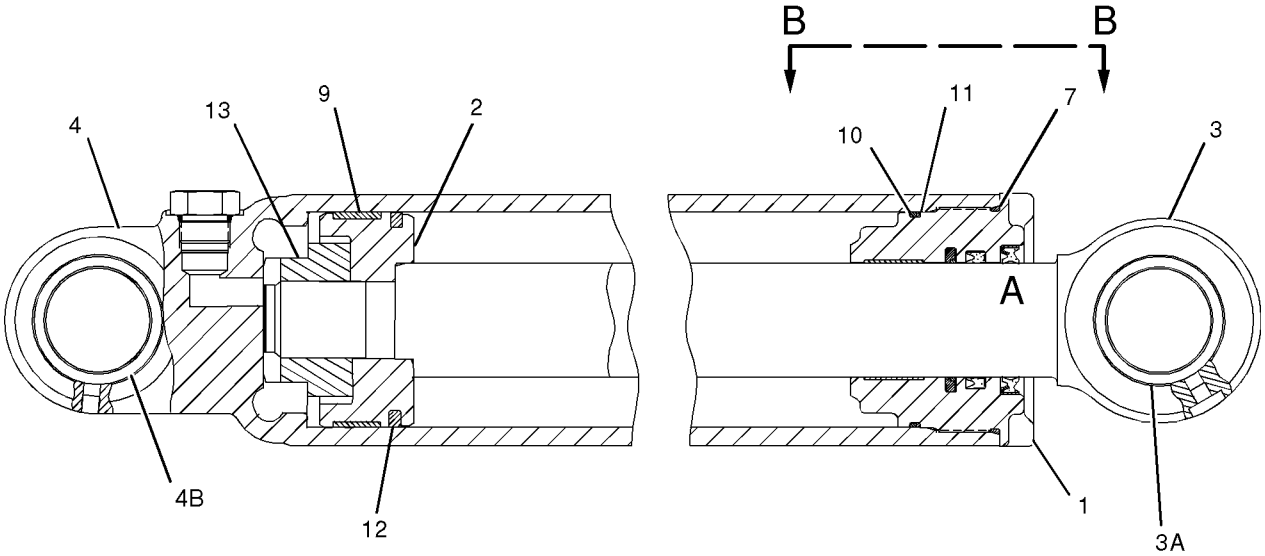


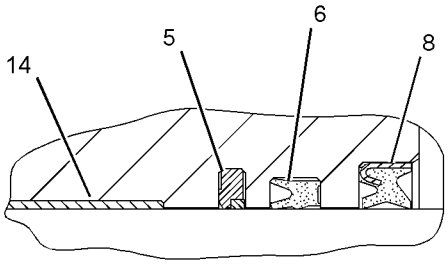


VIEW OF AREA A

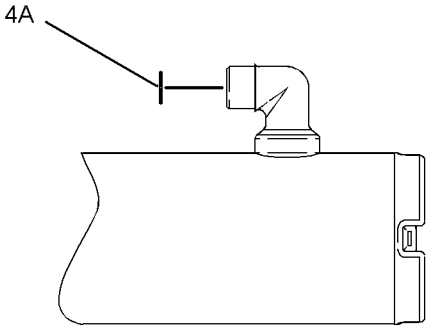


VIEW B-B

GRAPHIC #1 **<END>** g01032384

# HYDRAULIC SYSTEM

## 191-7735 CYLINDER GP-SWING

**S/N: BXC1-UP; DSX1-UP**
**101.6MM BORE X 249.0MM STROKE**
**PART OF 237-9297, 237-9298 HYDRAULIC AR**

**SMCS-5105** **i02010800**

| NOTE | REF NO | GRAPHIC REF | PART NUMBER | QTY | PART NAME 1 2 3 4 5 6 (PRODUCT LEVEL) | SEE PAGE |
|---|---|---|---|---|---|---|
| | 1 | 1 | **191-7734** | 1 | CYLINDER AS | |
| | | 1 | **9T-2883** | 2 | BEARING | |
| | 2 | 1 | **169-6947** | 1 | NUT (1 1/2 X 12 THD) | |
| | 3 | 1 | **6J-2797** | 1 | RING-WEAR | |
| | 4 | 1 | **5J-5402** | 1 | SEAL AS | |
| | 5 | 1 | **112-1773** | 1 | PISTON | |
| | 6 | 1 | **9X-4611** | 1 | SEAL-O-RING | |
| | 7 | 1 | **2K-6830** | 1 | RING-BACKUP | |
| | 8 | 1 | **191-6577** | 1 | HEAD-CYLINDER | |
| R | 9 | 1 | **125-7894** | 1 | ROD AS | |
| | 9A | 1 | **6E-1478** | 1 | PLUNGER | |
| | 9B | 1 | **2Y-5821** | 1 | RING | |
| | 9C | 1 | **102-3582** | 1 | WASHER (2.5MM THK) | |
| | 9D | 1 | **3N-5739** | 1 | SPRING | |
| | 9E | 1 | **9R-9505** | 2 | BEARING-SLEEVE | |
| | 10 | 1 | **229-9382** | 1 | SEAL-WIPER | |
| | 11 | 1 | **167-2304** | 1 | SEAL-U-CUP | |
| | 12 | 1 | **167-2195** | 1 | SEAL AS-BUFFER | |
| | 13 | 1 | **4T-5613** | 1 | RING-WEAR | |
| | 14 | 1 | **8H-7521** | 1 | SEAL-O-RING | |

R-REMFG PART MAY BE AVAILABLE

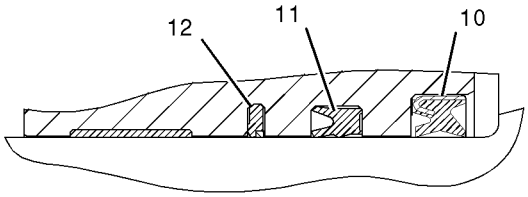


VIEW OF AREA B

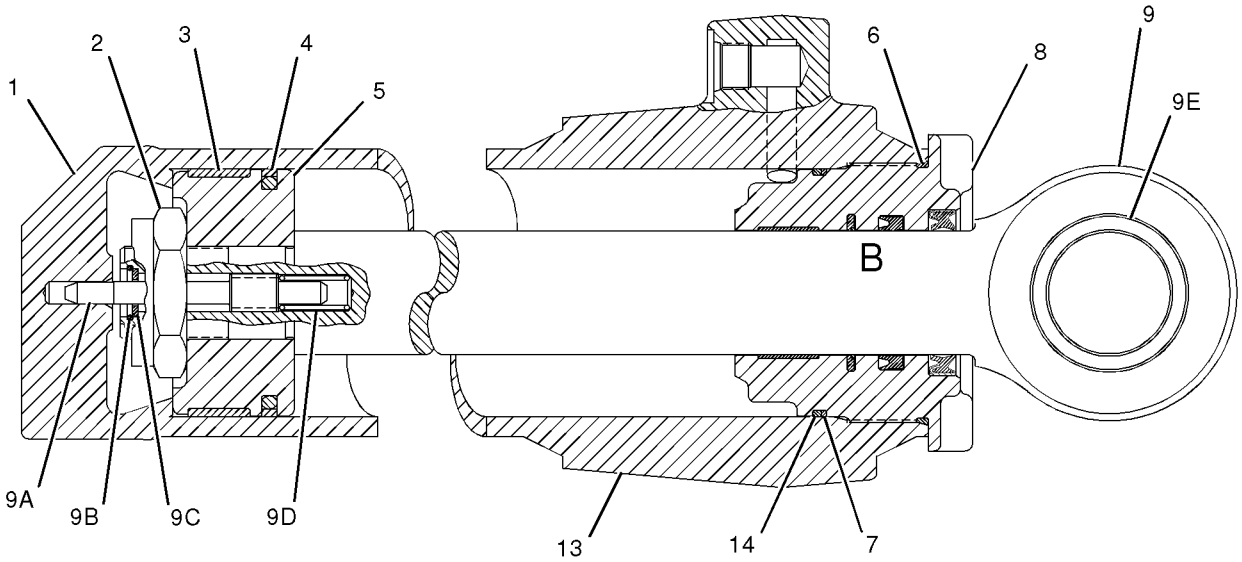


GRAPHIC #1 **<END>** g01039831

# HYDRAULIC SYSTEM

## 191-8161 CYLINDER GP-SWING

**S/N: BXC1-UP; DSX1-UP**
**101.6MM BORE X 249MM STROKE**
**PART OF 237-9297, 237-9298 HYDRAULIC AR**

**SMCS-5105** **i01982353**

| NOTE | REF NO | GRAPHIC REF | PART NUMBER | QTY | PART NAME 1 2 3 4 5 6 (PRODUCT LEVEL) | SEE PAGE |
|---|---|---|---|---|---|---|
| | 1 | 1 | **191-7738** | 1 | CYLINDER AS | |
| | 1A | 1 | **9T-2883** | 2 | BEARING | |
| | 2 | 1 | **169-6947** | 1 | NUT (1 1/2 X 12 THD) | |
| | 3 | 1 | **6J-2797** | 1 | RING-WEAR | |
| | 4 | 1 | **5J-5402** | 1 | SEAL AS | |
| | 5 | 1 | **112-1773** | 1 | PISTON | |
| | 6 | 1 | **9X-4611** | 1 | SEAL-O-RING | |
| | 7 | 1 | **2K-6830** | 1 | RING-BACKUP | |
| | 8 | 1 | **191-6577** | 1 | HEAD-CYLINDER | |
| R | 9 | 1 | **125-7894** | 1 | ROD AS | |
| | 9A | 1 | **6E-1478** | 1 | PLUNGER | |
| | 9B | 1 | **2Y-5821** | 1 | RING | |
| | 9C | 1 | **102-3582** | 1 | WASHER (2.5MM THK) | |
| | 9D | 1 | **3N-5739** | 1 | SPRING | |
| | 9E | 1 | **9R-9505** | 2 | BEARING-SLEEVE | |
| | 10 | 1 | **229-9382** | 1 | SEAL-WIPER | |
| | 11 | 1 | **167-2304** | 1 | SEAL-U-CUP | |
| | 12 | 1 | **167-2195** | 1 | SEAL AS-BUFFER | |
| | 13 | 1 | **4T-5613** | 1 | RING-WEAR | |
| | 14 | 1 | **8H-7521** | 1 | SEAL-O-RING | |

R-REMFG PART MAY BE AVAILABLE

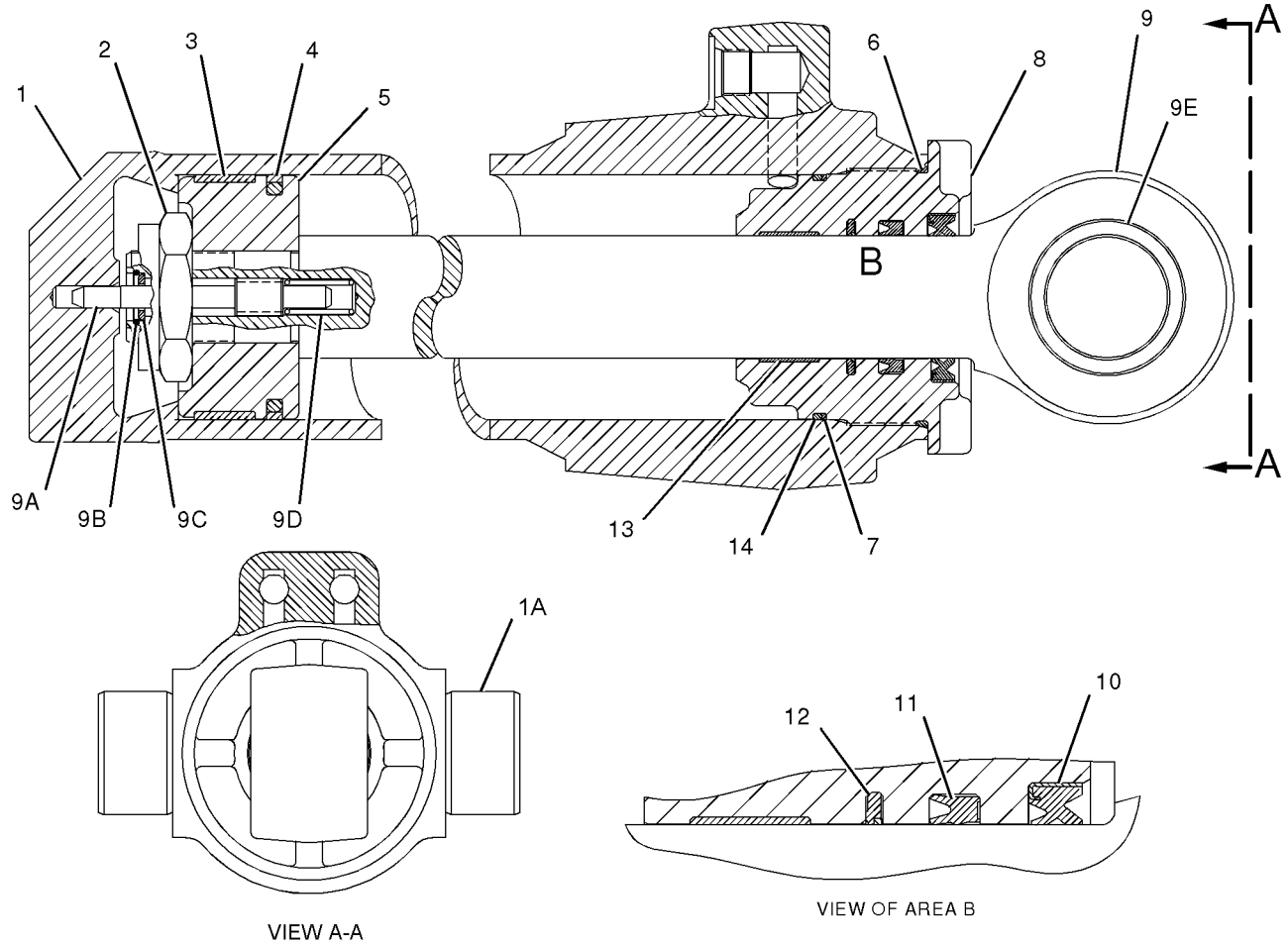


GRAPHIC #1 **<END>** g01027621

# HYDRAULIC SYSTEM

## 192-3884 CYLINDER GP-TILT

**S/N: BXC1-UP; DSX1-UP**
**75MM BORE X 884.5MM STROKE**
**PART OF 237-9297, 237-9298 HYDRAULIC AR**

**SMCS-5104** **i01883937**

| NOTE | REF NO | GRAPHIC REF | PART NUMBER | QTY | PART NAME 1 2 3 4 5 6 (PRODUCT LEVEL) | SEE PAGE |
|---|---|---|---|---|---|---|
| | 1 | 1 | **184-2365** | 1 | ROD AS | |
| | 1A | 1 | **9R-0321** | 2 | BEARING-SLEEVE | |
| | 2 | 1 | **184-2409** | 1 | PISTON | |
| | 3 | 1 | **192-3886** | 1 | CYLINDER AS | |
| | 3A | 1 | **6V-8398** | 1 | SEAL-O-RING | |
| | 3B | 1 | *184-1580* | 1 | CAP AS | |
| | | 1 | **9R-0153** | 2 | BEARING-SLEEVE | |
| | 4 | 1 | **143-8918** | 1 | RING-WEAR | |
| | 5 | 1 | **167-2195** | 1 | SEAL AS-BUFFER | |
| | 6 | 1 | **167-2304** | 1 | SEAL-U-CUP | |
| | 7 | 1 | **229-9382** | 1 | SEAL-WIPER | |
| M | 8 | 1 | **173-9779** | 1 | BOLT (M24X3.0X80MM) | |
| | 9 | 1 | **210-7029** | 1 | SEAL AS | |
| | 10 | 1 | **191-6149** | 1 | HEAD | |
| | 11 | 1 | **1H-7339** | 1 | SEAL-O-RING | |
| | 12 | 1 | **4T-5613** | 1 | RING-WEAR | |
| | 13 | 1 | **6J-2420** | 1 | RING | |
| | 14 | 1 | **6V-8237** | 1 | WASHER (26X44X4MM THK) | |
| | 15 | 1 | **8F-8882** | 1 | SEAL-O-RING | |

M-METRIC PART

**192-3884 CYLINDER GP-TILT** *(contd. )* **i01883937**

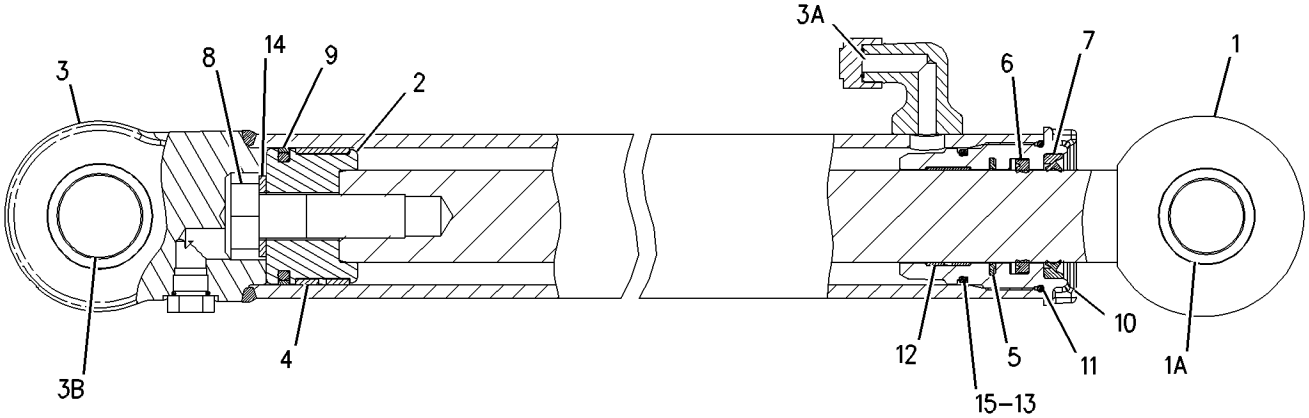


GRAPHIC #1 **<END>** g00976279

# HYDRAULIC SYSTEM

## *208-8658* DRAIN GP-HYDRAULIC

**S/N: BXC1-UP; DSX1-UP**

**AN ATTACHMENT**

**SMCS-5050, 5070** **i01667411**

| NOTE | REF NO | GRAPHIC REF | PART NUMBER | QTY | PART NAME 1 2 3 4 5 6 (PRODUCT LEVEL) | SEE PAGE |
|---|---|---|---|---|---|---|
| E | 1 | 1 | **5P-0743** | | HOSE (40CM) | |
| | 2 | 1 | **8T-0154** | 1 | CLAMP-HOSE | |
| | 3 | 1 | *165-2273* | 1 | VALVE GP-SHUTOFF | |
| | | 1 | **3K-0360** | 1 | SEAL-O-RING (16.36MM ID) | |
| | | 1 | **6V-7238** | 1 | VALVE-SHUTOFF | |

E-ORDER BY THE CENTIMETER

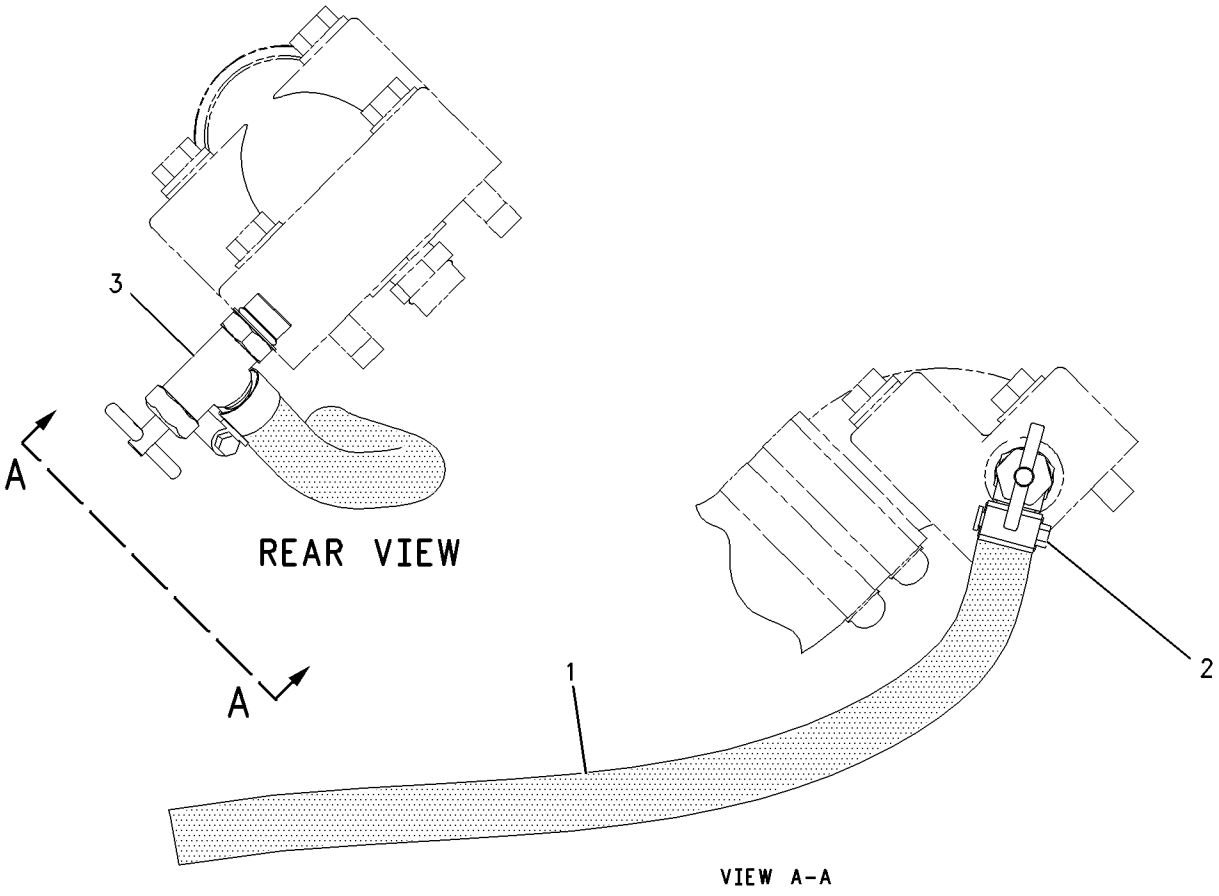


GRAPHIC #1 **<END>** g00861490

# HYDRAULIC SYSTEM

## *185-0060* HYDRAULIC AR—GENERAL PURPOSE BUCKET

**S/N: BXC1-UP; DSX1-UP**
**2 BANK, PARALLEL LIFT**
**AN ATTACHMENT**

**SMCS-5050** **i02003557**

| NOTE | PART NUMBER | QTY | PART NAME 1 2 3 4 5 6 (PRODUCT LEVEL) | SEE PAGE |
|---|---|---|---|---|
| | **164-1363** | 1 | BOOT | |
| | **186-5298** | 1 | FILM-INSTRUCTION (BUCKET CONTROL) | |
| Y | *189-8797* | 1 | LINES GP-LIFT CYLINDER | 448 |
| Y | *189-0551* | 1 | LINES GP-TILT CYLINDER | 519 |
| Y | *185-1598* | 1 | MOUNTING GP-BANK VALVE | 525 |
| Y | *119-4595* | 1 | MOUNTING GP-BUCKET | 689 |
| Y | **185-5913** | 1 | VALVE GP-BANK 2 | 548 |

Y-SEPARATE ILLUSTRATION

**<END>**

## *185-0061* HYDRAULIC AR—GENERAL PURPOSE BUCKET—LOCKS

**S/N: BXC1-UP; DSX1-UP**
**2 BANK, PARALLEL LIFT**
**AN ATTACHMENT**

**SMCS-5050** **i02003559**

| NOTE | PART NUMBER | QTY | PART NAME 1 2 3 4 5 6 (PRODUCT LEVEL) | SEE PAGE |
|---|---|---|---|---|
| | **164-1363** | 1 | BOOT | |
| | **186-5298** | 1 | FILM-INSTRUCTION (BUCKET CONTROL) | |
| Y | *183-8552* | 1 | LINES GP-LOAD CONTROL VALVE | 454 |
| Y | *185-1598* | 1 | MOUNTING GP-BANK VALVE | 525 |
| Y | *119-4595* | 1 | MOUNTING GP-BUCKET | 689 |
| | *211-3372* | 1 | SWITCH GP | |
| | **130-2758** | 1 | HOUSING-SWITCH | |
| | **130-2759** | 1 | HOUSING-DETENT | |
| | **131-0379** | 1 | SWITCH AS (HYDRAULIC LOCK) | |
| | **102-8803** | 1 | KIT-RECEPTACLE (3-PIN) | |
| | | | (KIT INCLUDES RECEPTACLE AS.& WEDGE) | |
| | **3E-3371** | 1 | WEDGE-RECEPTACLE LOCK (3-PIN) | |
| | **8T-8729** | 3 | PIN-CONNECTOR | |
| Y | **185-5913** | 1 | VALVE GP-BANK 2 | 548 |

Y-SEPARATE ILLUSTRATION

**<END>**

## *185-0062* HYDRAULIC AR—MULTIPURPOSE BUCKET

**S/N: BXC1-UP; DSX1-UP**
**3 BANK, PARALLEL LIFT**
**AN ATTACHMENT**

**SMCS-5050** **i02003560**

| NOTE | PART NUMBER | QTY | PART NAME 1 2 3 4 5 6 (PRODUCT LEVEL) | SEE PAGE |
|---|---|---|---|---|
| | **164-1364** | 1 | BOOT | |
| Y | *183-3159* | 1 | CONTROL GP-HYDRAULIC HAND | 362 |
| | **188-0861** | 1 | FILM (INST) (MULTIPURPOSE BUCKET CONTROL) | |
| | **186-5298** | 1 | FILM-INSTRUCTION (BUCKET CONTROL) | |
| Y | *189-8797* | 1 | LINES GP-LIFT CYLINDER | 448 |
| Y | *112-6403* | 1 | LINES GP-LOADER AUXILIARY | 464 |
| Y | *189-0551* | 1 | LINES GP-TILT CYLINDER | 519 |
| Y | *185-1598* | 1 | MOUNTING GP-BANK VALVE | 525 |
| Y | *119-4595* | 1 | MOUNTING GP-BUCKET | 689 |
| Y | **185-5914** | 1 | VALVE GP-BANK 3 | 550 |

Y-SEPARATE ILLUSTRATION

**<END>**

## *185-0063* HYDRAULIC AR—MULTIPURPOSE BUCKET—LOCKS

**S/N: BXC1-UP; DSX1-UP**
**3 BANK, PARALLEL LIFT**
**AN ATTACHMENT**

**SMCS-5050** **i02003562**

| NOTE | PART NUMBER | QTY | PART NAME 1 2 3 4 5 6 (PRODUCT LEVEL) | SEE PAGE |
|---|---|---|---|---|
| | **164-1364** | 1 | BOOT | |
| Y | *183-3159* | 1 | CONTROL GP-HYDRAULIC HAND | 362 |
| | **198-0102** | 1 | FILM (MULTIPURPOSE BUCKET) (MECHANICAL BUCKET CONTROL) | |
| | **186-5298** | 1 | FILM-INSTRUCTION (BUCKET CONTROL) | |
| Y | *183-8552* | 1 | LINES GP-LOAD CONTROL VALVE | 454 |
| Y | *112-6403* | 1 | LINES GP-LOADER AUXILIARY | 464 |
| Y | *185-1598* | 1 | MOUNTING GP-BANK VALVE | 525 |
| Y | *119-4595* | 1 | MOUNTING GP-BUCKET | 689 |
| | *211-3372* | 1 | SWITCH GP | |
| | **130-2758** | 1 | HOUSING-SWITCH | |
| | **130-2759** | 1 | HOUSING-DETENT | |
| | **131-0379** | 1 | SWITCH AS (DETENT) | |
| | **102-8803** | 1 | KIT-RECEPTACLE (3-PIN) | |
| | | | (KIT SERVICES RECEPTACLE AS & WEDGE) | |
| | **186-3735** | 3 | PIN-CONNECTOR | |
| Y | **185-5914** | 1 | VALVE GP-BANK 3 | 550 |

Y-SEPARATE ILLUSTRATION

**<END>**

# HYDRAULIC SYSTEM

## *186-5335* HYDRAULIC AR—GENERAL PURPOSE BUCKET

**S/N: BXC1-UP; DSX1-UP**
**2 BANK, SINGLE TILT**
**AN ATTACHMENT**

**SMCS-5050** **i02003565**

| NOTE | PART NUMBER | QTY | PART NAME 1 2 3 4 5 6 (PRODUCT LEVEL) | SEE PAGE |
|---|---|---|---|---|
| | **164-1363** | 1 | BOOT | |
| | **186-5298** | 1 | FILM-INSTRUCTION (BUCKET CONTROL) | |
| Y | *163-9371* | 1 | LINES GP-LIFT CYLINDER | 446 |
| Y | *200-4153* | 1 | LINES GP-LIFT CYLINDER | 450 |
| Y | *189-0555* | 1 | LINES GP-TILT CYLINDER | 521 |
| Y | *185-1598* | 1 | MOUNTING GP-BANK VALVE | 525 |
| Y | **185-5911** | 1 | VALVE GP-BANK 2 | 547 |
| Y-SEPARATE ILLUSTRATION | | | | |

**<END>**

## *186-5336* HYDRAULIC AR—GENERAL PURPOSE BUCKET—LOCKS

**S/N: BXC1-UP; DSX1-UP**
**2 BANK, SINGLE TILT**
**AN ATTACHMENT**

**SMCS-5050** **i02003566**

| NOTE | PART NUMBER | QTY | PART NAME 1 2 3 4 5 6 (PRODUCT LEVEL) | SEE PAGE |
|---|---|---|---|---|
| | **164-1363** | 1 | BOOT | |
| | **186-5298** | 1 | FILM-INSTRUCTION (BUCKET CONTROL) | |
| Y | *183-8559* | 1 | LINES GP-LOAD CONTROL VALVE | 458 |
| Y | *185-1598* | 1 | MOUNTING GP-BANK VALVE | 525 |
| | **211-3372** | 1 | SWITCH GP (HYDRAULIC LOCK) | |
| | **130-2758** | 1 | HOUSING-SWITCH | |
| | **130-2759** | 1 | HOUSING-DETENT | |
| | **131-0379** | 1 | SWITCH AS | |
| Y | **185-5911** | 1 | VALVE GP-BANK 2 | 547 |
| Y-SEPARATE ILLUSTRATION | | | | |

**<END>**

# HYDRAULIC SYSTEM

## *186-5337* HYDRAULIC AR—MULTIPURPOSE BUCKET

**S/N: BXC1-UP; DSX1-UP**
**3 BANK, SINGLE TILT**
**AN ATTACHMENT**

**SMCS-5050** **i02003613**

| NOTE | PART NUMBER | QTY | PART NAME 1 2 3 4 5 6 (PRODUCT LEVEL) | SEE PAGE |
|---|---|---|---|---|
| | **164-1364** | 1 | BOOT | |
| Y | *183-3150* | 1 | CONTROL GP-HYDRAULIC HAND | 361 |
| | **198-0102** | 1 | FILM (MULTIPURPOSE BUCKET) | |
| | **186-5298** | 1 | FILM-INSTRUCTION (BUCKET CONTROL) | |
| Y | *163-9371* | 1 | LINES GP-LIFT CYLINDER | 446 |
| Y | *200-4153* | 1 | LINES GP-LIFT CYLINDER | 450 |
| Y | *106-5876* | 1 | LINES GP-LOADER AUXILIARY | 462 |
| Y | *189-0555* | 1 | LINES GP-TILT CYLINDER | 521 |
| Y | *185-1598* | 1 | MOUNTING GP-BANK VALVE | 525 |
| Y | **185-5912** | 1 | VALVE GP-BANK 3 | 549 |

Y-SEPARATE ILLUSTRATION

**<END>**

## *186-5338* HYDRAULIC AR—MULTIPURPOSE BUCKET—LOCKS

**S/N: BXC1-UP; DSX1-UP**
**3 BANK, SINGLE TILT**
**AN ATTACHMENT**

**SMCS-5050** **i02003627**

| NOTE | PART NUMBER | QTY | PART NAME 1 2 3 4 5 6 (PRODUCT LEVEL) | SEE PAGE |
|---|---|---|---|---|
| | **164-1364** | 1 | BOOT | |
| Y | *183-3150* | 1 | CONTROL GP-HYDRAULIC HAND | 361 |
| | **198-0102** | 1 | FILM (MULTIPURPOSE BUCKET) | |
| | **186-5298** | 1 | FILM-INSTRUCTION (BUCKET CONTROL) | |
| Y | *183-8559* | 1 | LINES GP-LOAD CONTROL VALVE | 458 |
| Y | *106-5876* | 1 | LINES GP-LOADER AUXILIARY | 462 |
| Y | *185-1598* | 1 | MOUNTING GP-BANK VALVE | 525 |
| | **211-3372** | 1 | SWITCH GP | |
| | **130-2758** | 1 | HOUSING-SWITCH | |
| | **130-2759** | 1 | HOUSING-DETENT | |
| | **131-0379** | 1 | SWITCH AS (LOADER VALVE) | |
| Y | **185-5912** | 1 | VALVE GP-BANK 3 | 549 |

Y-SEPARATE ILLUSTRATION

**<END>**

## *202-6122* HYDRAULIC AR—STANDARD SWING—STANDARD FRAME

**S/N: BXC1-UP; DSX1-UP**
**AN ATTACHMENT**

**SMCS-5050** **i01668181**

| NOTE | PART NUMBER | QTY | PART NAME 1 2 3 4 5 6 (PRODUCT LEVEL) | SEE PAGE |
|---|---|---|---|---|
| Y | *183-8505* | 1 | LINES GP-SWING | 509 |

Y-SEPARATE ILLUSTRATION

**<END>**

# HYDRAULIC SYSTEM

## *202-6123* HYDRAULIC AR—CUSHION SWING—SIDESHIFT STANDARD FRAME

**S/N: BXC1-UP; DSX1-UP**
**AN ATTACHMENT**

**SMCS-5050** **i01806999**

| NOTE | PART NUMBER | QTY | PART NAME 1 2 3 4 5 6 (PRODUCT LEVEL) | SEE PAGE |
|---|---|---|---|---|
| Y | *202-6120* | 1 | LINES GP-SWING | 513 |

Y-SEPARATE ILLUSTRATION

**<END>**

## *202-6124* HYDRAULIC AR—STANDARD SWING—NARROW FRAME

**S/N: BXC1-UP; DSX1-UP**
**AN ATTACHMENT**

**SMCS-5050** **i01668206**

| NOTE | PART NUMBER | QTY | PART NAME 1 2 3 4 5 6 (PRODUCT LEVEL) | SEE PAGE |
|---|---|---|---|---|
| Y | *183-8522* | 1 | LINES GP-SWING | 511 |

Y-SEPARATE ILLUSTRATION

**<END>**

## *202-6125* HYDRAULIC AR—CUSHION SWING—SIDESHIFT NARROW FRAME

**S/N: BXC1-UP; DSX1-UP**
**AN ATTACHMENT**

**SMCS-5050** **i01807009**

| NOTE | PART NUMBER | QTY | PART NAME 1 2 3 4 5 6 (PRODUCT LEVEL) | SEE PAGE |
|---|---|---|---|---|
| Y | *202-6121* | 1 | LINES GP-SWING | 516 |

Y-SEPARATE ILLUSTRATION

**<END>**

# HYDRAULIC SYSTEM

## *237-9297* HYDRAULIC AR—STANDARD FRAME

**S/N: BXC1-UP**

**PART OF 214-6993 COMMON AR**

**SMCS-5050** **i02010670**

| NOTE | PART NUMBER | QTY | PART NAME 1 2 3 4 5 6 (PRODUCT LEVEL) | SEE PAGE |
|---|---|---|---|---|
| Y | *202-6139* | 1 | CONNECTOR GP-VALVE | 347 |
| Y | **206-3630** | 1 | CYLINDER GP-BOOM | 376 |
| Y | **192-3791** | 2 | CYLINDER GP-LIFT | 381 |
| Y | **173-4565** | 2 | CYLINDER GP-STABILIZER | 384 |
| Y | **235-9831** | 1 | CYLINDER GP-STICK | 385 |
| Y | **191-7735** | 1 | CYLINDER GP-SWING | 386 |
| Y | **191-8161** | 1 | CYLINDER GP-SWING | 387 |
| Y | **192-3884** | 2 | CYLINDER GP-TILT | 388 |
| | **210-6243** | 1 | FILTER GP-OIL (HYDRAULIC) | |
| | **126-1817** | 1 | FILTER AS-OIL (CLEANOUT/HIGH EFFICIENCY) | |
| | | | —OR— | |
| | **134-3014** | 1 | FILTER AS-OIL (HYDRAULIC) (FIRE RESISTANT) | |
| Y | *235-4551* | 1 | LINES GP-PUMP | 479 |
| Y | *235-4799* | 1 | LINES GP-RETURN | 486 |
| Y | *185-3414* | 1 | LINES GP-STABILIZER | 497 |
| Y | *185-3167* | 1 | MOUNTING GP-BANK VALVE | 526 |
| Y | *112-1826* | 1 | MOUNTING GP-HYDRAULIC PUMP | 528 |
| Y | **235-4110** | 1 | PUMP GP-PISTON | 533 |
| Y | *234-6926* | 1 | TANK GP-HYDRAULIC | 539 |
| Y | *185-9784* | 1 | VALVE & MTG GP-BANK (STABILIZER) | 541 |

Y-SEPARATE ILLUSTRATION

**<END>**

# HYDRAULIC SYSTEM

## *237-9298* HYDRAULIC AR—NARROW FRAME

**S/N: DSX1-UP**

**PART OF 214-6994 COMMON AR**

**SMCS-5050** **i02010671**

| NOTE | PART NUMBER | QTY | PART NAME 1 2 3 4 5 6 (PRODUCT LEVEL) | SEE PAGE |
|---|---|---|---|---|
| Y | *202-6139* | 1 | CONNECTOR GP-VALVE | 347 |
| Y | **206-3630** | 1 | CYLINDER GP-BOOM | 376 |
| Y | **192-3791** | 2 | CYLINDER GP-LIFT | 381 |
| Y | **173-4565** | 2 | CYLINDER GP-STABILIZER | 384 |
| Y | **235-9831** | 1 | CYLINDER GP-STICK | 385 |
| Y | **191-7735** | 1 | CYLINDER GP-SWING | 386 |
| Y | **191-8161** | 1 | CYLINDER GP-SWING | 387 |
| Y | **192-3884** | 2 | CYLINDER GP-TILT | 388 |
| | **210-6243** | 1 | FILTER GP-OIL (HYDRAULIC) | |
| | **126-1817** | 1 | FILTER AS-OIL (CLEANOUT/HIGH EFFICIENCY) | |
| | | | —OR— | |
| | **134-3014** | 1 | FILTER AS-OIL (HYDRAULIC) (FIRE RESISTANT) | |
| Y | *235-4551* | 1 | LINES GP-PUMP | 479 |
| Y | *235-4799* | 1 | LINES GP-RETURN | 486 |
| Y | *185-9751* | 1 | LINES GP-STABILIZER | 499 |
| Y | *185-3167* | 1 | MOUNTING GP-BANK VALVE | 526 |
| Y | *112-1826* | 1 | MOUNTING GP-HYDRAULIC PUMP | 528 |
| Y | **235-4110** | 1 | PUMP GP-PISTON | 533 |
| Y | *234-6926* | 1 | TANK GP-HYDRAULIC | 539 |
| Y | *185-9784* | 1 | VALVE & MTG GP-BANK (STABILIZER) | 541 |

Y-SEPARATE ILLUSTRATION

**<END>**

## *239-9410* KIT-RIDE CONTROL

**S/N: BXC1-UP; DSX1-UP**

**FIELD INSTALLATION**

**SMCS-5004** **i01971708**

| NOTE | PART NUMBER | QTY | PART NAME 1 2 3 4 5 6 (PRODUCT LEVEL) | SEE PAGE |
|---|---|---|---|---|
| | **173-4514** | 2 | FILM (RIDE CONTROL) | |
| Y | *235-5861* | 1 | LINES GP-RIDE CONTROL | 487 |
| | **169-0607** | 1 | SWITCH AS (RIDE CONTROL-STANDARD) | |
| | **111-7899** | 1 | GASKET | |
| Y | *186-0312* | 1 | WIRING GP-RIDE CONTROL | 208 |

Y-SEPARATE ILLUSTRATION

**<END>**

# HYDRAULIC SYSTEM

## *183-8506* LINES GP-BACKHOE—STANDARD FRAME

**S/N: BXC1-UP; DSX1-UP**

**PART OF 240-8490, 240-8491, 240-8492, 240-8493, 240-8689, 240-8690, 240-8691, 240-8692 BACKHOE AR-EXTENDABLE STICK, 240-8683, 240-8684, 240-8685, 240-8686, 240-8687, 240-8688 BACKHOE AR-STANDARD STICK**

**AN ATTACHMENT**

**SMCS-5057** **i01496787**

| NOTE | REF NO | GRAPHIC REF | PART NUMBER | QTY | PART NAME 1 2 3 4 5 6 (PRODUCT LEVEL) | SEE PAGE |
|---|---|---|---|---|---|---|
| | 1 | 1 | **106-5813** | 4 | BLOCK | |
| | 2 | 1 | **106-5814** | 4 | PLATE | |
| | 3 | 1 | **111-3798** | 2 | CLAMP-RH | |
| | 4 | 1 | **176-9154** | 1 | BRACKET-RH | |
| | 5 | 1 | **183-8488** | 1 | HOSE AS | |
| | 6 | 1 | **183-8490** | 1 | HOSE AS | |
| | 7 | 1 | **183-8492** | 1 | HOSE AS | |
| | 8 | 1 | **183-8494** | 1 | HOSE AS | |
| | 9 | 1 | **183-8500** | 1 | HOSE AS | |
| | 10 | 1 | **183-8502** | 1 | HOSE AS | |
| | 11 | 1 | *148-8341* | 6 | CONNECTOR GP | |
| | | | | | (EACH INCLUDES) | |
| | | 1 | **3D-2824** | 1 | SEAL-O-RING | |
| | | 1 | **6V-8713** | 1 | CONNECTOR (1-14 THD X 1 1/16-12 THD) | |
| | | 1 | **7J-9108** | 1 | SEAL-O-RING | |
| | 12 | 1 | **2P-1293** | 2 | LOCKNUT-BULKHEAD (1 3/16-12 THD) | |
| M | 13 | 1 | **6V-7744** | 10 | LOCKNUT (M10X1.5 THD) | |
| | 14 | 1 | **6V-8398** | 2 | SEAL-O-RING | |
| | 15 | 1 | **6V-9169** | 2 | NUT-BULKHEAD (13/16-16 THD) | |
| | 16 | 1 | **6V-9170** | 2 | NUT-BULKHEAD (1-14 THD) | |
| | 17 | 1 | **6V-9746** | 2 | SEAL-O-RING | |
| | 18 | 1 | **7J-9108** | 2 | SEAL-O-RING | |
| | 19 | 1 | **8T-4121** | 2 | WASHER-HARD (11X21X2.5MM THK) | |
| M | 20 | 1 | **8T-4136** | 2 | BOLT (M10X1.5X25MM) | |
| M | 21 | 1 | **8T-5005** | 10 | BOLT (M10X1.50X70MM) | |

M-METRIC PART

*183-8506* **LINES GP-BACKHOE** *(contd.)* **i01496787**

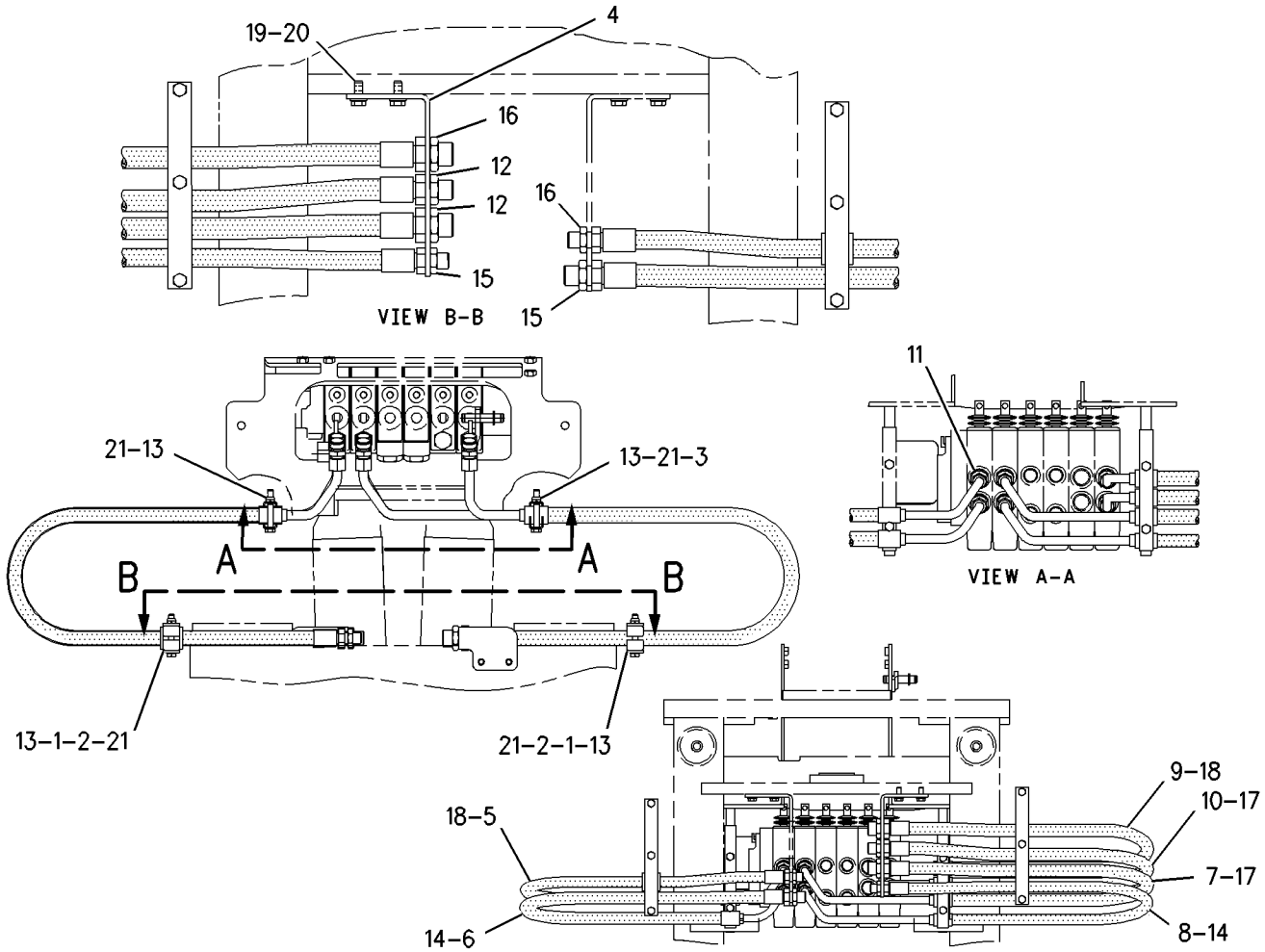


GRAPHIC #1 **<END>** g00726759

# HYDRAULIC SYSTEM

## *183-8524* LINES GP-BACKHOE—NARROW FRAME

**S/N: BXC1-UP; DSX1-UP**

**PART OF 240-8504, 240-8505, 240-8506, 240-8507, 240-8699, 240-8700, 240-8701, 240-8702 BACKHOE AR-EXTENDABLE STICK, 240-8693, 240-8694, 240-8695, 240-8696, 240-8697, 240-8698 BACKHOE AR-STANDARD STICK**

**AN ATTACHMENT**

**SMCS-5057** **i01379049**

| NOTE | REF NO | GRAPHIC REF | PART NUMBER | QTY | PART NAME 1 2 3 4 5 6 (PRODUCT LEVEL) | SEE PAGE |
|---|---|---|---|---|---|---|
| M | 1 | 1 | **6V-7744** | 10 | LOCKNUT (M10X1.50 THD) | |
| | 2 | 1 | **106-5813** | 4 | BLOCK | |
| | 3 | 1 | **106-5814** | 4 | PLATE | |
| | 4 | 1 | **111-3798** | 2 | CLAMP-RH | |
| | 5 | 1 | **176-9154** | 1 | BRACKET-RH | |
| | 6 | 1 | **183-8512** | 1 | HOSE AS | |
| | 7 | 1 | **183-8513** | 1 | HOSE AS | |
| | 8 | 1 | **183-8514** | 1 | HOSE AS | |
| | 9 | 1 | **183-8515** | 1 | HOSE AS | |
| | 10 | 1 | **183-8518** | 1 | HOSE AS | |
| | 11 | 1 | **183-8519** | 1 | HOSE AS | |
| | 12 | 1 | *148-8341* | 6 | CONNECTOR GP | |
| | | | | | (EACH INCLUDES) | |
| | | 1 | **3D-2824** | 1 | SEAL-O-RING (23.47MM ID) | |
| | | 1 | **6V-8713** | 1 | CONNECTOR (1-14 THD X 1 1/16-12 THD) | |
| | | 1 | **7J-9108** | 1 | SEAL-O-RING (15.72MM ID) | |
| | 13 | 1 | **2P-1293** | 2 | LOCKNUT-BULKHEAD (1 3/16-12 THD) | |
| | 14 | 1 | **6V-8398** | 2 | SEAL-O-RING (12.47MM ID) | |
| | 15 | 1 | **6V-9169** | 2 | NUT-BULKHEAD (13/16-16 THD) | |
| | 16 | 1 | **6V-9170** | 2 | NUT-BULKHEAD (1-14 THD) | |
| | 17 | 1 | **6V-9746** | 2 | SEAL-O-RING (18.94MM ID) | |
| | 18 | 1 | **7J-9108** | 2 | SEAL-O-RING (15.72MM ID) | |
| | 19 | 1 | **8T-4121** | 2 | WASHER-HARD (11X21X2.5MM THK) | |
| M | 20 | 1 | **8T-4136** | 2 | BOLT (M10X1.5X25MM) | |
| M | 21 | 1 | **8T-5005** | 10 | BOLT (M10X1.50X70MM) | |

M-METRIC PART

*183-8524* **LINES GP-BACKHOE** *(contd.)* **i01379049**

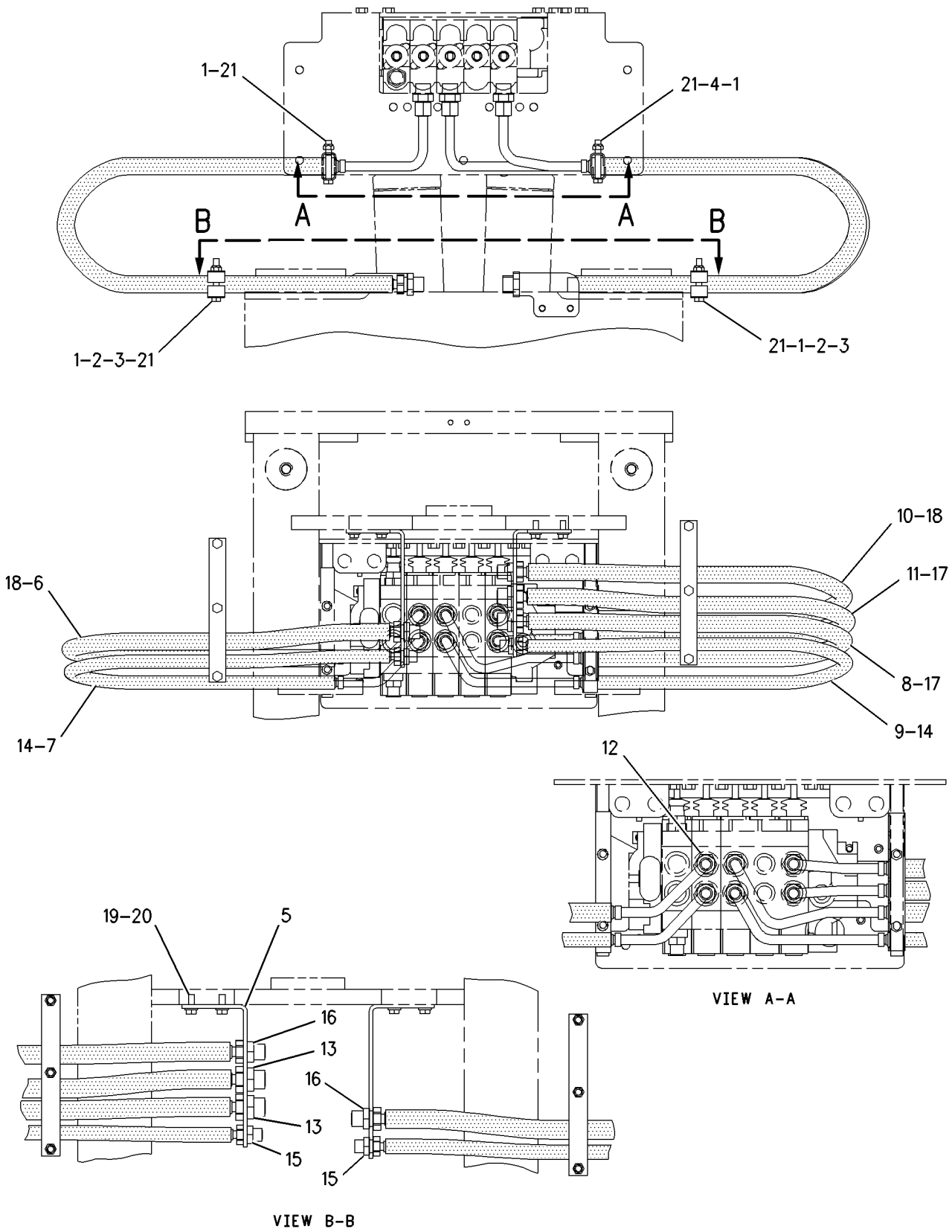


GRAPHIC #1 **<END>** g00728830

# HYDRAULIC SYSTEM

## *183-8508* LINES GP-BACKHOE AUXILIARY—EXTENDABLE STICK—STANDARD FRAME

**S/N: BXC1-UP; DSX1-UP**

**PART OF 240-8490, 240-8491, 240-8492, 240-8493, 240-8689, 240-8690, 240-8691, 240-8692 BACKHOE AR-EXTENDABLE STICK AN ATTACHMENT**

**SMCS-5057** **i01490817**

| NOTE | REF NO | GRAPHIC REF | PART NUMBER | QTY | PART NAME 1 2 3 4 5 6 (PRODUCT LEVEL) | SEE PAGE |
|---|---|---|---|---|---|---|
| | 1 | 1 | **176-0145** | 2 | CLAMP | |
| | 2 | 1 | **176-9152** | 1 | BRACKET-LH | |
| | 3 | 1 | **183-8484** | 1 | HOSE AS | |
| | 4 | 1 | **183-8486** | 1 | HOSE AS | |
| | 5 | 1 | *148-8341* | 2 | CONNECTOR GP | |
| | | | | | (EACH INCLUDES) | |
| | | 1 | **3D-2824** | 1 | SEAL-O-RING | |
| | | 1 | **6V-8713** | 1 | CONNECTOR (1-14 THD X 1 1/16-12 THD) | |
| | | 1 | **7J-9108** | 1 | SEAL-O-RING | |
| | 6 | 1 | **2P-1293** | 1 | LOCKNUT-BULKHEAD (1 3/16-12 THD) | |
| | 7 | 1 | **6V-8398** | 1 | SEAL-O-RING | |
| | 8 | 1 | **6V-9169** | 1 | NUT-BULKHEAD (13/16-16 THD) | |
| | 9 | 1 | **6V-9746** | 1 | SEAL-O-RING | |
| | 10 | 1 | **8T-4121** | 2 | WASHER-HARD (11X21X2.5MM THK) | |
| M | 11 | 1 | **8T-4136** | 2 | BOLT (M10X1.5X25MM) | |

M-METRIC PART

*183-8508* **LINES GP-BACKHOE AUXILIARY** *(contd. )* **i01490817**

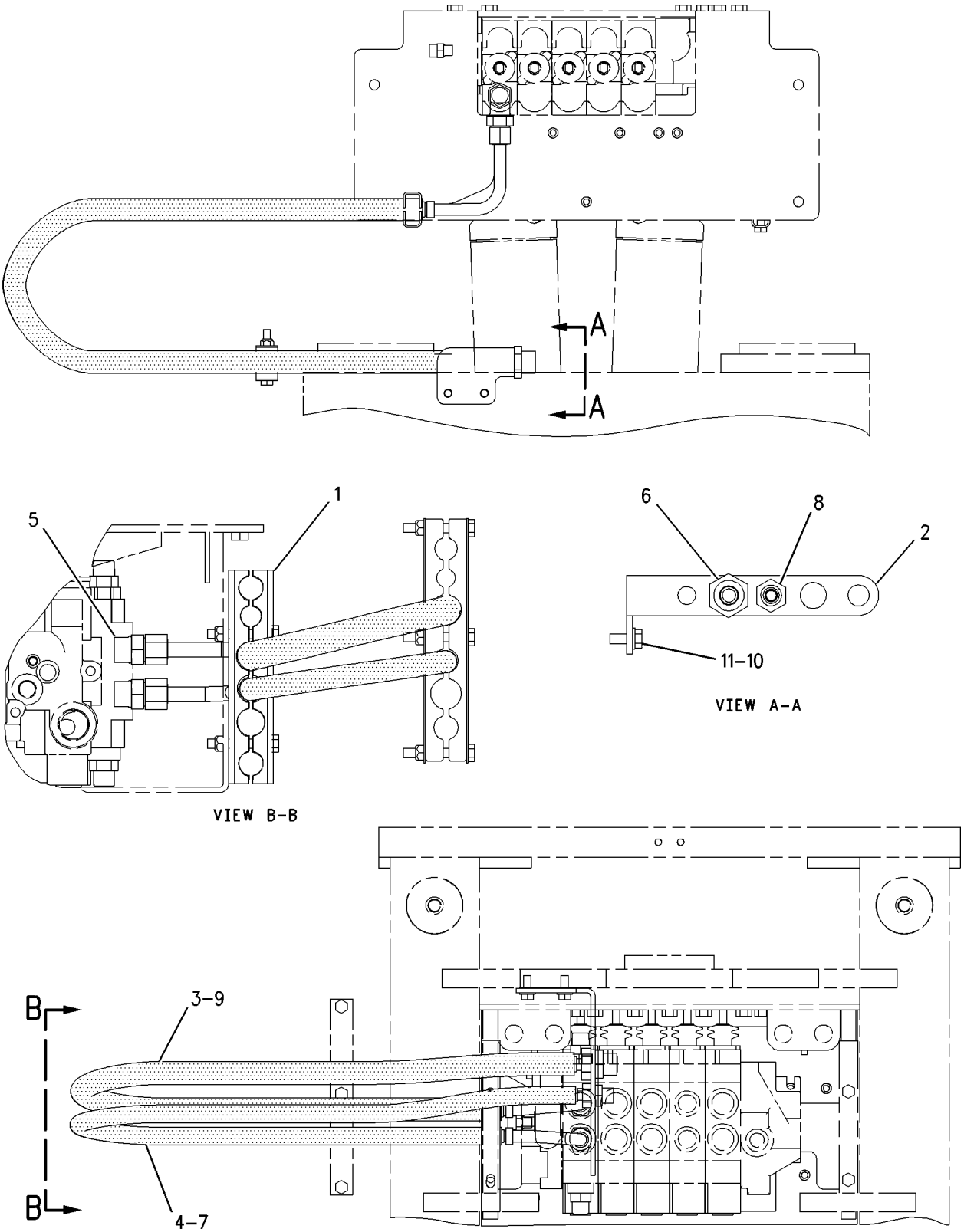


GRAPHIC #1 **<END>** g00774236

# HYDRAULIC SYSTEM

## *183-8509* LINES GP-BACKHOE AUXILIARY—STANDARD STICK

**S/N: BXC1-UP**

**PART OF 240-8685, 240-8686 BACKHOE AR-STANDARD STICK**

**AN ATTACHMENT**

**SMCS-5057** **i01499432**

| NOTE | REF NO | GRAPHIC REF | PART NUMBER | QTY | PART NAME 1 2 3 4 5 6 (PRODUCT LEVEL) | SEE PAGE |
|---|---|---|---|---|---|---|
| | 1 | 1 | **176-0145** | 2 | CLAMP | |
| | 2 | 1 | **176-9152** | 1 | BRACKET-LH | |
| | 3 | 1 | **183-8484** | 1 | HOSE AS | |
| | 4 | 1 | *148-8341* | 1 | CONNECTOR GP | |
| | | 1 | **3D-2824** | 1 | SEAL-O-RING | |
| | | 1 | **6V-8713** | 1 | CONNECTOR (1-14 THD X 1 1/16-12 THD) | |
| | | 1 | **7J-9108** | 1 | SEAL-O-RING | |
| | 5 | 1 | *148-8408* | 1 | PLUG AS | |
| | | 1 | **3D-2824** | 1 | SEAL-O-RING | |
| | | 1 | **9S-4183** | 1 | PLUG | |
| | 6 | 1 | **2P-1293** | 1 | LOCKNUT-BULKHEAD (1 3/16-12 THD) | |
| | 7 | 1 | **6V-9746** | 1 | SEAL-O-RING | |
| | 8 | 1 | **8T-4121** | 2 | WASHER-HARD (11X21X2.5MM THK) | |
| M | 9 | 1 | **8T-4136** | 2 | BOLT (M10X1.5X25MM) | |

M-METRIC PART

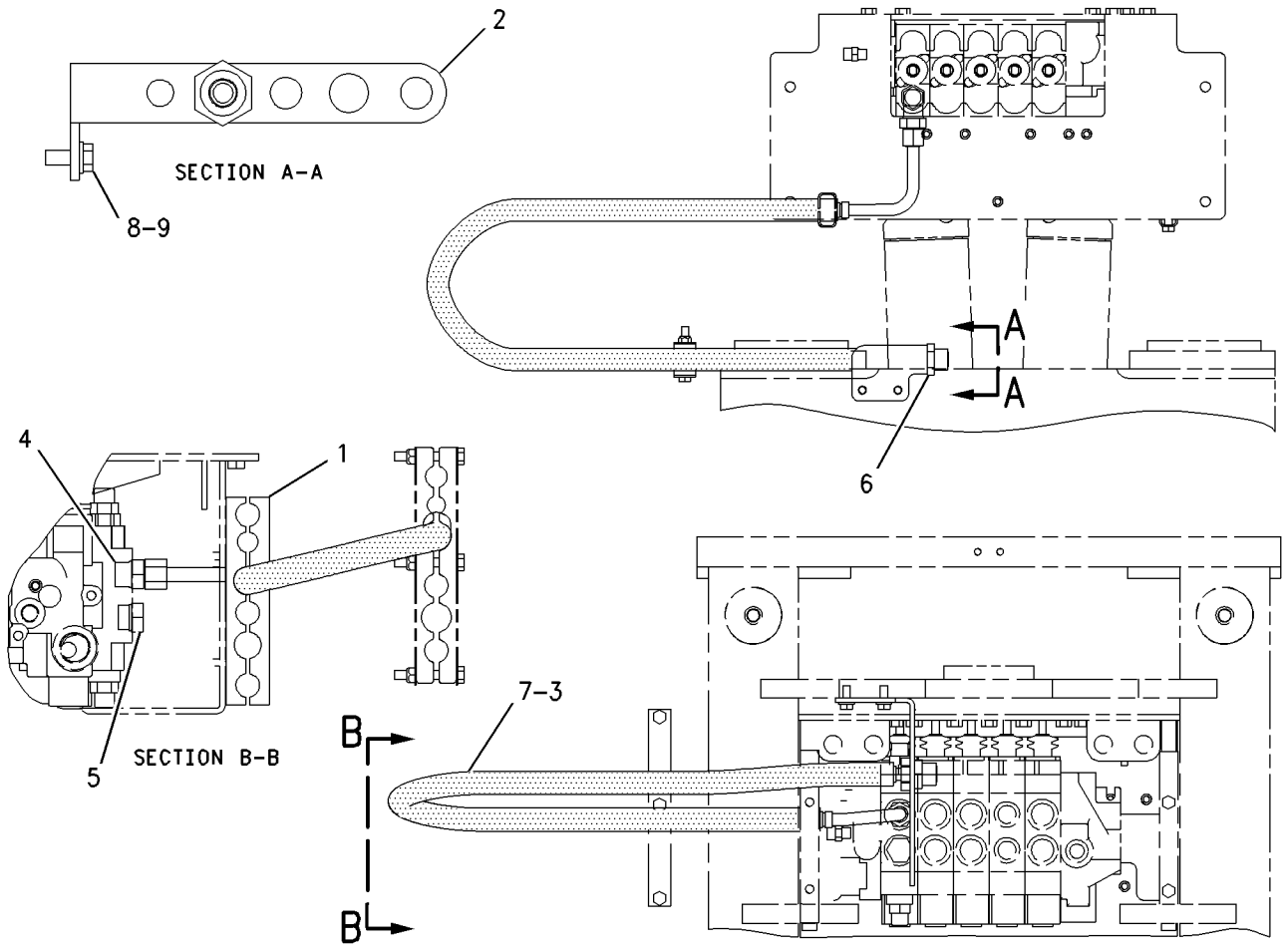


GRAPHIC #1 **<END>** g00778144

## *183-8526* LINES GP-BACKHOE AUXILIARY—NARROW FRAME

**S/N: BXC1-UP; DSX1-UP**

**PART OF 240-8504, 240-8505, 240-8506, 240-8507, 240-8699, 240-8700, 240-8701, 240-8702 BACKHOE AR-EXTENDABLE STICK AN ATTACHMENT**

**SMCS-5057** **i01626541**

| NOTE | REF NO | GRAPHIC REF | PART NUMBER | QTY | PART NAME 1 2 3 4 5 6 (PRODUCT LEVEL) | SEE PAGE |
|---|---|---|---|---|---|---|
| | 1 | 1 | **176-0145** | 2 | CLAMP | |
| | 2 | 1 | **176-9152** | 1 | BRACKET-LH | |
| | 3 | 1 | **183-8510** | 1 | HOSE AS | |
| | 4 | 1 | **183-8511** | 1 | HOSE AS | |
| | 5 | 1 | *148-8341* | 2 | CONNECTOR GP | |
| | | | | | (EACH INCLUDES) | |
| | | 1 | **3D-2824** | 1 | SEAL-O-RING | |
| | | 1 | **6V-8713** | 1 | CONNECTOR | |
| | | 1 | **7J-9108** | 1 | SEAL-O-RING | |
| | 6 | 1 | **2P-1293** | 1 | LOCKNUT-BULKHEAD (1 3/16-12 THD) | |
| | 7 | 1 | **6V-8398** | 1 | SEAL-O-RING | |
| | 8 | 1 | **6V-9169** | 1 | NUT-BULKHEAD (13/16-16 THD) | |
| | 9 | 1 | **6V-9746** | 1 | SEAL-O-RING | |
| | 10 | 1 | **8T-4121** | 2 | WASHER-HARD (11X21X2.5MM THK) | |
| M | 11 | 1 | **8T-4136** | 2 | BOLT (M10X1.5X25MM) | |

M-METRIC PART

*183-8526* **LINES GP-BACKHOE AUXILIARY** *(contd. )* **i01626541**

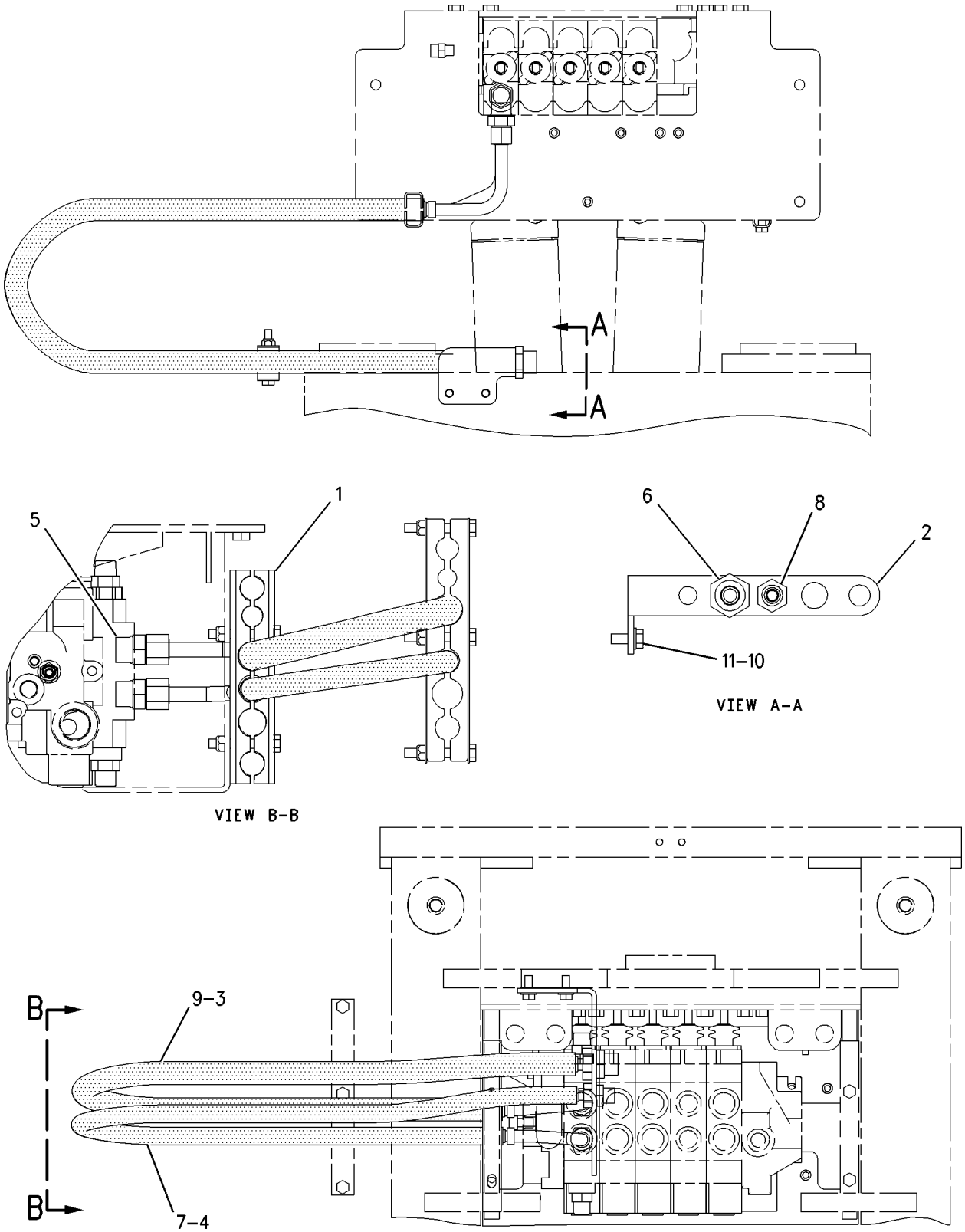


GRAPHIC #1 **<END>** g00842370

# HYDRAULIC SYSTEM

## *183-8527* LINES GP-BACKHOE AUXILIARY—NARROW FRAME

**S/N: DSX1-UP**

**PART OF 240-8695, 240-8696 BACKHOE AR-STANDARD STICK AN ATTACHMENT**

**SMCS-5057** **i01626547**

| NOTE | REF NO | GRAPHIC REF | PART NUMBER | QTY | PART NAME 1 2 3 4 5 6 (PRODUCT LEVEL) | SEE PAGE |
|---|---|---|---|---|---|---|
| | 1 | 1 | **176-0145** | 2 | CLAMP | |
| | 2 | 1 | **176-9152** | 1 | BRACKET-LH | |
| | 3 | 1 | **183-8510** | 1 | HOSE AS | |
| | 4 | 1 | *148-8341* | 1 | CONNECTOR GP | |
| | | 1 | **3D-2824** | 1 | SEAL-O-RING | |
| | | 1 | **6V-8713** | 1 | CONNECTOR | |
| | | 1 | **7J-9108** | 1 | SEAL-O-RING | |
| | 5 | 1 | *148-8408* | 1 | PLUG AS | |
| | | 1 | **3D-2824** | 1 | SEAL-O-RING | |
| | | 1 | **9S-4183** | 1 | PLUG | |
| | 6 | 1 | **2P-1293** | 1 | LOCKNUT-BULKHEAD (1 3/16-12 THD) | |
| | 7 | 1 | **6V-9746** | 1 | SEAL-O-RING | |
| | 8 | 1 | **8T-4121** | 2 | WASHER-HARD (11X21X2.5MM THK) | |
| M | 9 | 1 | **8T-4136** | 2 | BOLT (M10X1.5X25MM) | |

M-METRIC PART

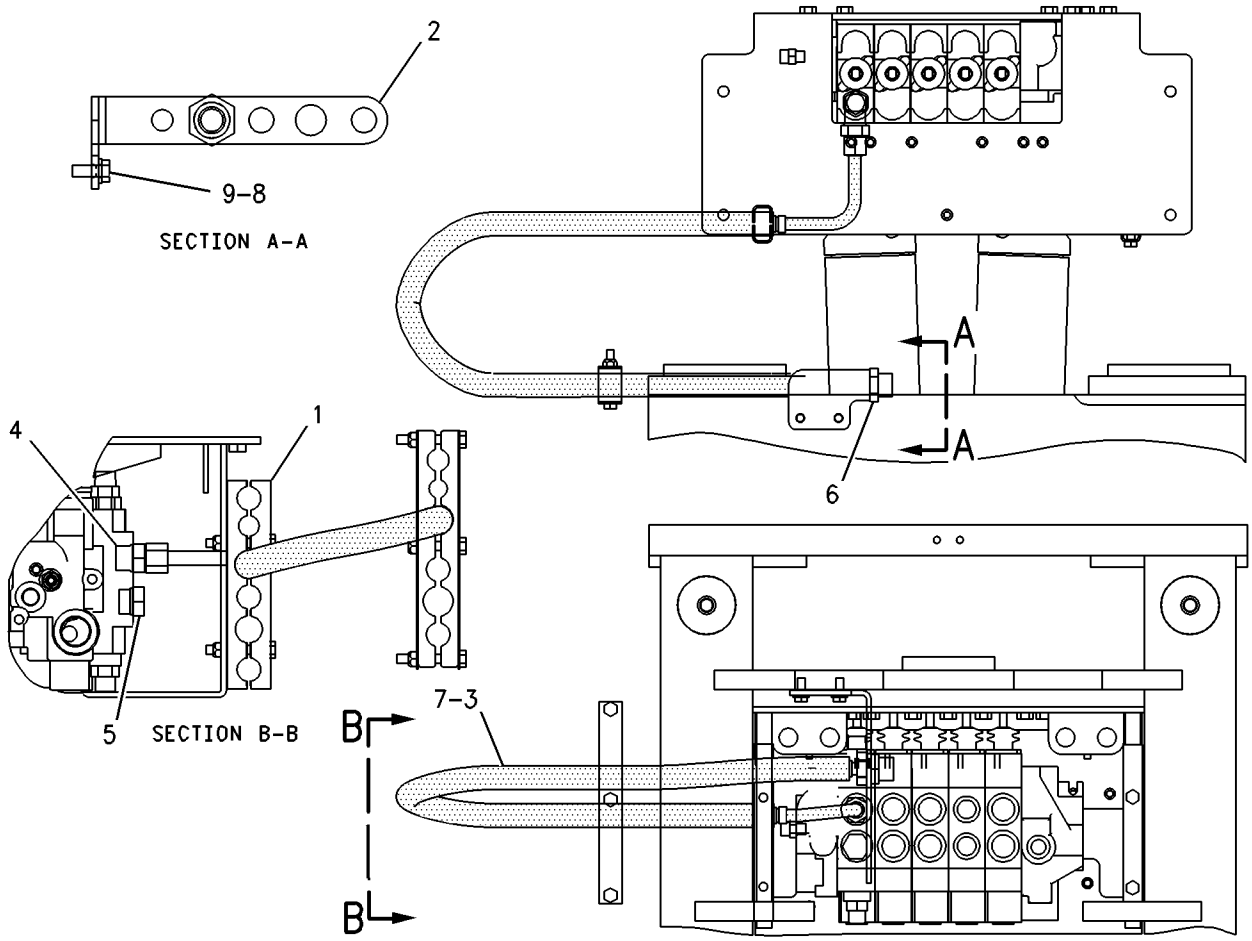


GRAPHIC #1 **<END>** g00842379

# HYDRAULIC SYSTEM

## *199-9617* LINES GP-BACKHOE AUXILIARY–KIT

**S/N: BXC1-UP; DSX1-UP**
**STANDARD STICK, NARROW FRAME, HAMMER**
**AN ATTACHMENT**

**SMCS-5057** **i01986880**

| NOTE | REF NO | GRAPHIC REF | PART NUMBER | QTY | PART NAME 1 2 3 4 5 6 (PRODUCT LEVEL) | SEE PAGE |
|---|---|---|---|---|---|---|
| | 1 | 1,2 | **101-0863** | 2 | FILM-INSTRUCTION (RETURN FLOW) | |
| I | 2 | 1 | **106-0409** | 1 | HOSE AS | |
| | 3 | 1 | **107-6696** | 1 | TUBE AS | |
| | 4 | 1 | **107-6697** | 1 | PIN AS | |
| M | | 1 | **8T-3490** | 1 | NUT-WELD (M10X1.5 THD) | |
| | 5 | 2 | **107-6698** | 1 | BRACKET AS | |
| | 6 | 1 | **107-6701** | 1 | TUBE AS | |
| | 7 | 2 | **107-6707** | 1 | BRACKET | |
| | 8 | 1 | **107-6708** | 1 | BRACKET | |
| I | 9 | 1 | **107-6717** | 1 | HOSE AS | |
| | 10 | 1 | **107-6718** | 1 | TUBE AS | |
| | 11 | 2 | **109-1260** | 1 | BRACKET | |
| | 12 | 1 | **159-0959** | 1 | PIN AS | |
| | | 1 | **9R-2672** | 2 | BOSS (M10X20MM) | |
| | 13 | 2 | **122-0536** | 1 | BRACKET | |
| | 14 | 1,2 | **123-7637** | 2 | CAP | |
| | 15 | 1,2 | **168-8192** | 1 | HOSE AS | |
| | 16 | 1 | **168-8193** | 1 | TUBE AS | |
| I | 17 | 2 | **168-8493** | 1 | HOSE AS | |
| I | 18 | 1,2 | **176-9294** | 1 | HOSE AS | |
| Y | 19 | 1,2 | *178-7481* | 1 | VALVE GP-CHECK | 558 |
| I | 20 | 2 | **183-8510** | 1 | HOSE AS | |
| I | 21 | 1 | **204-9204** | 1 | HOSE AS | |
| | 22 | 2 | *148-8341* | 1 | CONNECTOR GP | |
| | | 2 | **3D-2824** | 1 | SEAL-O-RING | |
| | | 2 | **6V-8713** | 1 | CONNECTOR | |
| | | 2 | **7J-9108** | 1 | SEAL-O-RING | |
| | 23 | 1 | *148-8352* | 1 | ELBOW GP | |
| | | 1 | **5K-9090** | 1 | SEAL-O-RING | |
| | | 1 | **6V-9854** | 1 | ELBOW (SWIVEL) | |
| | 24 | 1 | *150-3052* | 1 | CONNECTOR AS | |
| | | 1 | **5K-9090** | 1 | SEAL-O-RING | |
| | | 1 | **7M-8485** | 1 | SEAL-O-RING | |
| | | 1 | **107-6709** | 1 | CONNECTOR | |
| | 25 | 2 | *150-3053* | 1 | CONNECTOR AS | |
| | | 2 | **6V-9746** | 1 | SEAL-O-RING | |
| | | 2 | **7M-8485** | 1 | SEAL-O-RING | |
| | | 2 | **108-3872** | 1 | CONNECTOR | |
| | 26 | 1 | *150-3068* | 1 | UNION AS | |
| | | 1 | **5K-9090** | 2 | SEAL-O-RING | |
| | | 1 | **6V-9649** | 1 | UNION-90 DEGREE | |
| | 27 | 2 | **2P-1293** | 2 | LOCKNUT (1 3/16-12 THD) | |
| B | 28 | 1,2 | **5K-9090** | 5 | SEAL-O-RING | |
| | 29 | 2 | **5P-7466** | 1 | CLIP (SLOT) | |
| | 30 | 2 | **5P-7467** | 1 | CLIP (TAB) | |
| | 31 | 1,2 | **5P-7468** | 4 | CLIP (SLOT) | |
| | 32 | 1,2 | **5P-7469** | 4 | CLIP (TAB) | |
| | 33 | 2 | **5P-8112** | 1 | GROMMET | |
| | 34 | 1,2 | **5P-8444** | 4 | GROMMET | |
| M | 35 | 2 | **6V-7744** | 2 | LOCKNUT (M10X1.5 THD) | |
| | 36 | 1 | **6V-9172** | 1 | NUT (1 7/16-12 THD) | |
| | 37 | 1,2 | **6V-9746** | 3 | SEAL-O-RING | |
| | 38 | 1,2 | **7S-3916** | 4 | CLIP (TAB) | |
| | 39 | 1,2 | **7S-3919** | 4 | CLIP (SLOT) | |
| B | 40 | 1,2 | **8T-1889** | 3 | CLIP (SLOT) | |

## *199-9617* LINES GP-BACKHOE AUXILIARY *(contd. )* i01986880

| NOTE | REF NO | GRAPHIC REF | PART NUMBER | QTY | PART NAME 1 2 3 4 5 6 (PRODUCT LEVEL) | SEE PAGE |
|---|---|---|---|---|---|---|
| B | 41 | 1,2 | **8T-1890** | 3 | CLIP (TAB) | |
| B | 42 | 1,2 | **8T-4121** | 11 | WASHER-HARD (11X21X2.5MM THK) | |
| M | 43 | 2 | **8T-4133** | 1 | NUT (M10X1.5 THD) | |
| BM | 44 | 1,2 | **8T-4136** | 9 | BOLT (M10X1.5X25MM) | |
| M | 45 | 1 | **8T-4137** | 1 | BOLT (M10X1.5X20MM) | |
| M | 46 | 1,2 | **8T-4139** | 9 | BOLT (M12X1.75X30MM) | |
| M | 47 | 2 | **8T-4195** | 1 | BOLT (M10X1.5X30MM) | |
| | 48 | 1,2 | **8T-4223** | 9 | WASHER-HARD (13.5X25.5X3MM THK) | |
| M | 49 | 2 | **8T-4244** | 2 | NUT (M12X1.75 THD) | |
| | 50 | 2 | **202-6018** | 4 | FILM-WARNING (HIGH PRESSURE CYLINDER) | |
| B | 51 | 2 | *148-8335* | 1 | CONNECTOR AS | |
| | | 2 | **5K-9090** | 1 | SEAL-O-RING | |
| | | 2 | **6V-8635** | 1 | CONNECTOR | |
| | | 2 | **7M-8485** | 1 | SEAL-O-RING | |
| BI | 52 | 2 | **236-9900** | 1 | HOSE AS | |
| B | 53 | 2 | **236-9980** | 1 | TUBE AS | |

B-USE AS REQUIRED
I-REFER TO HYDRAULIC INFORMATION SYSTEM
M-METRIC PART
Y-SEPARATE ILLUSTRATION

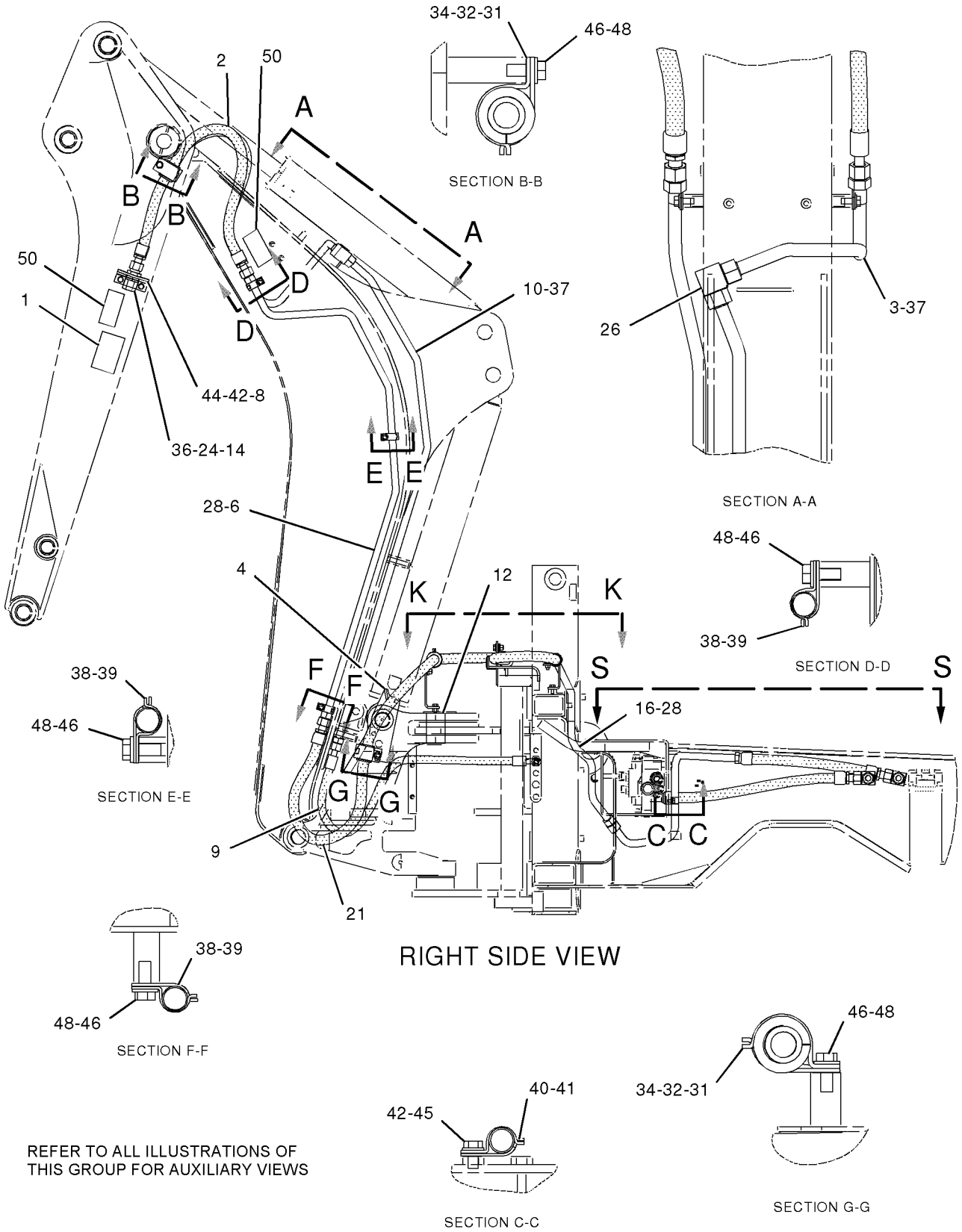


REFER TO ALL ILLUSTRATIONS OF
THIS GROUP FOR AUXILIARY VIEWS

GRAPHIC #1

g01029499

*199-9617* **LINES GP-BACKHOE AUXILIARY** *(contd. )* **i01986880**

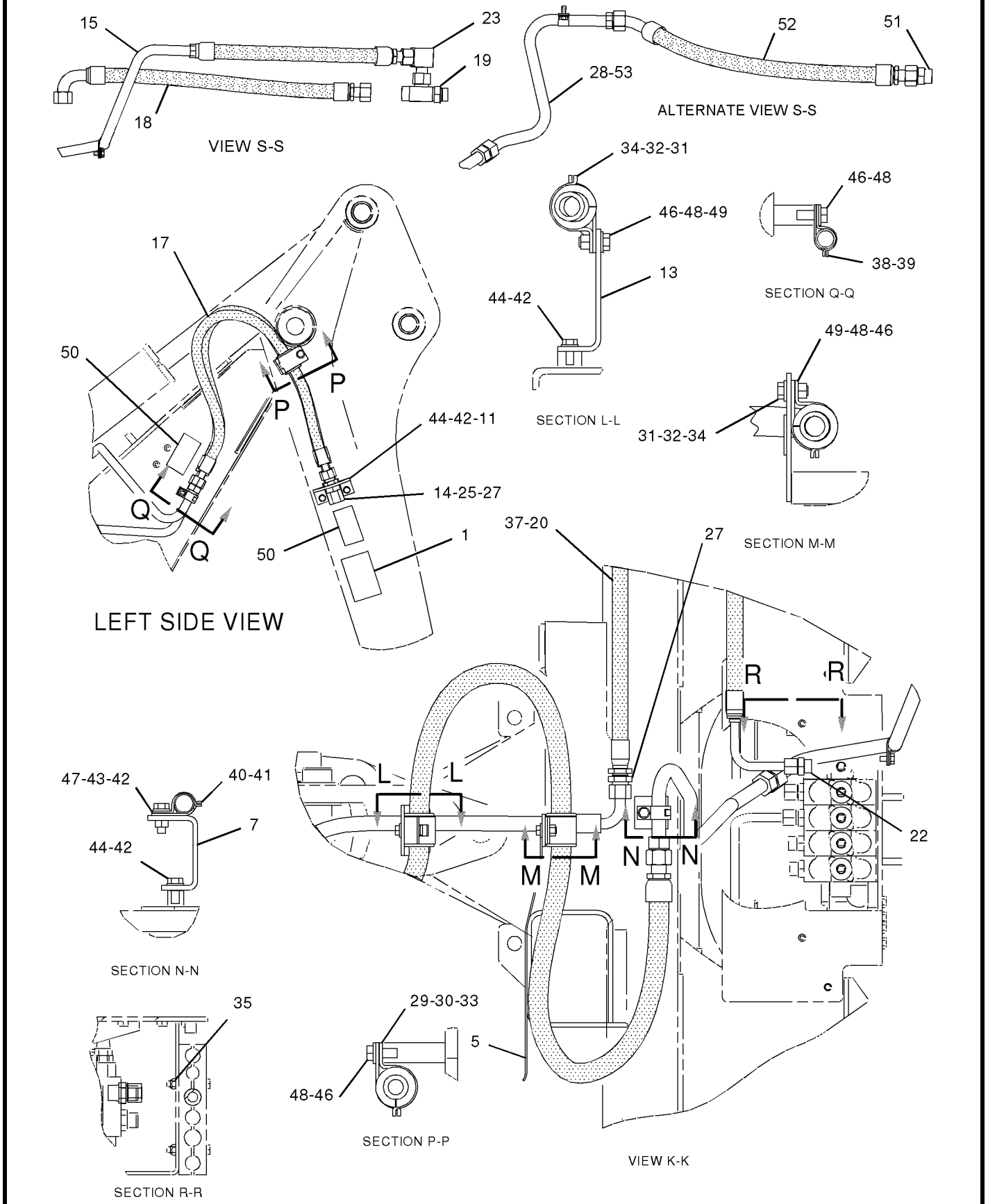


GRAPHIC #2 **<END>** g01029500

# HYDRAULIC SYSTEM

## *199-9618* LINES GP-BACKHOE AUXILIARY–KIT

**S/N: BXC1-UP; DSX1-UP**
**EXTENDABLE STICK, NARROW FRAME, HAMMER**
**AN ATTACHMENT**

**SMCS-5057** **i01981323**

| NOTE | REF NO | GRAPHIC REF | PART NUMBER | QTY | PART NAME 1 2 3 4 5 6 (PRODUCT LEVEL) | SEE PAGE |
|---|---|---|---|---|---|---|
| | 1 | 1,2 | **101-0863** | 2 | FILM-INSTRUCTION (RETURN FLOW) | |
| I | 2 | 1 | **106-0409** | 1 | HOSE AS | |
| | 3 | 1 | **107-6696** | 1 | TUBE AS | |
| | 4 | 2 | **107-6698** | 1 | BRACKET AS | |
| | 5 | 1 | **107-6701** | 1 | TUBE AS | |
| | 6 | 2 | **107-6707** | 1 | BRACKET | |
| | 7 | 1 | **107-6708** | 1 | BRACKET | |
| | 8 | 2 | **109-1260** | 1 | BRACKET | |
| | 9 | 2 | **122-0536** | 1 | BRACKET | |
| | 10 | 1,2 | **123-7637** | 2 | CAP | |
| | 11 | 2 | **168-8192** | 1 | HOSE AS | |
| | 12 | 1 | **168-8193** | 1 | TUBE AS | |
| I | 13 | 1 | **168-8493** | 1 | HOSE AS | |
| I | 14 | 1 | **204-9204** | 1 | HOSE AS | |
| | 15 | 2 | *148-8352* | 1 | ELBOW GP | |
| | | 2 | **5K-9090** | 1 | SEAL-O-RING | |
| | | 2 | **6V-9854** | 1 | ELBOW (SWIVEL) | |
| | 16 | 1 | *150-3052* | 1 | CONNECTOR AS | |
| | | 1 | **5K-9090** | 1 | SEAL-O-RING | |
| | | 1 | **7M-8485** | 1 | SEAL-O-RING | |
| | | 1 | **107-6709** | 1 | CONNECTOR | |
| | 17 | 2 | *150-3053* | 1 | CONNECTOR AS | |
| | | 2 | **6V-9746** | 1 | SEAL-O-RING | |
| | | 2 | **7M-8485** | 1 | SEAL-O-RING | |
| | | 2 | **108-3872** | 1 | CONNECTOR | |
| | 18 | 2 | **2P-1293** | 1 | LOCKNUT (1 3/16-12 THD) | |
| B | 19 | 1,2 | **5K-9090** | 5 | SEAL-O-RING | |
| | 20 | 2 | **5P-7466** | 1 | CLIP (SLOT) | |
| | 21 | 2 | **5P-7467** | 1 | CLIP (TAB) | |
| | 22 | 1,2 | **5P-7468** | 4 | CLIP (SLOT) | |
| | 23 | 1,2 | **5P-7469** | 4 | CLIP (TAB) | |
| | 24 | 2 | **5P-8112** | 1 | GROMMET | |
| | 25 | 1,2 | **5P-8444** | 4 | GROMMET | |
| | 26 | 1 | **6V-9172** | 1 | NUT (1 7/16-12 THD) | |
| | 27 | 1 | **6V-9746** | 1 | SEAL-O-RING | |
| | 28 | 1,2 | **7S-3916** | 4 | CLIP (TAB) | |
| | 29 | 1,2 | **7S-3919** | 4 | CLIP (SLOT) | |
| B | 30 | 1,2 | **8T-1889** | 3 | CLIP (SLOT) | |
| B | 31 | 1,2 | **8T-1890** | 3 | CLIP (TAB) | |
| B | 32 | 1,2 | **8T-4121** | 9 | WASHER-HARD (11X21X2.5MM THK) | |
| M | 33 | 2 | **8T-4133** | 1 | NUT (M10X1.5 THD) | |
| BM | 34 | 1,2 | **8T-4136** | 7 | BOLT (M10X1.5X25MM) | |
| M | 35 | 1 | **8T-4137** | 1 | BOLT (M10X1.5X20MM) | |
| M | 36 | 1,2 | **8T-4139** | 6 | BOLT (M12X1.75X30MM) | |
| M | 37 | 1,2 | **8T-4184** | 2 | BOLT (M12X1.75X45MM) | |
| M | 38 | 2 | **8T-4195** | 1 | BOLT (M10X1.5X30MM) | |
| | 39 | 1,2 | **8T-4223** | 8 | WASHER-HARD (13.5X25.5X3MM THK) | |
| M | 40 | 2 | **8T-4244** | 2 | NUT (M12X1.75 THD) | |
| | 41 | 1,2 | **202-6018** | 4 | FILM-WARNING (HIGH PRESSURE CYLINDER) | |
| B | 42 | 2 | *148-8335* | 1 | CONNECTOR AS | |
| | | 2 | **6V-8635** | 1 | CONNECTOR | |
| | | 2 | **5K-9090** | 1 | SEAL-O-RING | |
| | | 2 | **7M-8485** | 1 | SEAL-O-RING | |
| BI | 43 | 2 | **236-9900** | 1 | HOSE AS | |
| B | 44 | 2 | **236-9980** | 1 | TUBE AS | |

## *199-9618* LINES GP-BACKHOE AUXILIARY *(contd. )* i01981323

B-USE AS REQUIRED
I-REFER TO HYDRAULIC INFORMATION SYSTEM
M-METRIC PART

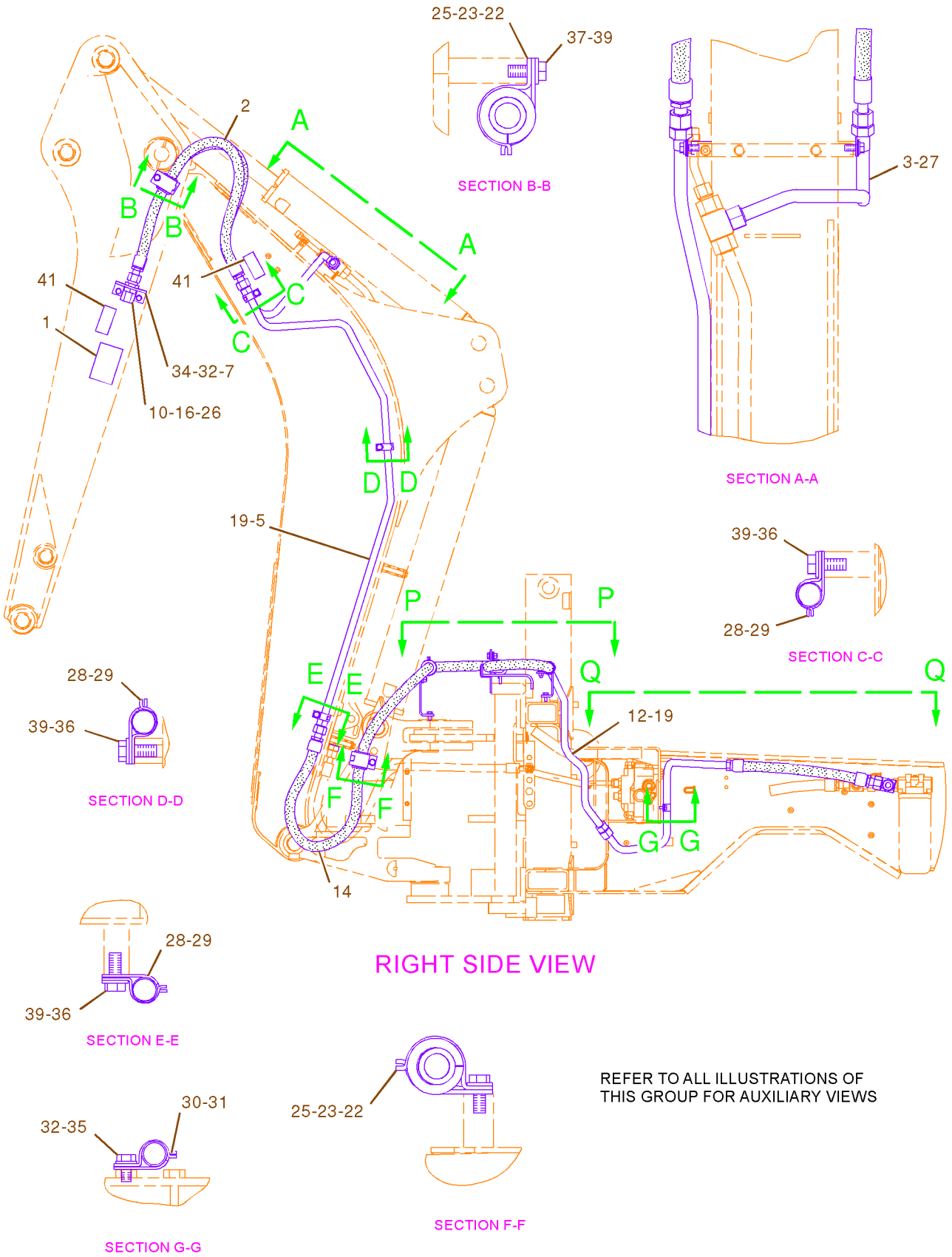


GRAPHIC #1 g01032093

*199-9618* **LINES GP-BACKHOE AUXILIARY** *(contd.)* **i01981323**

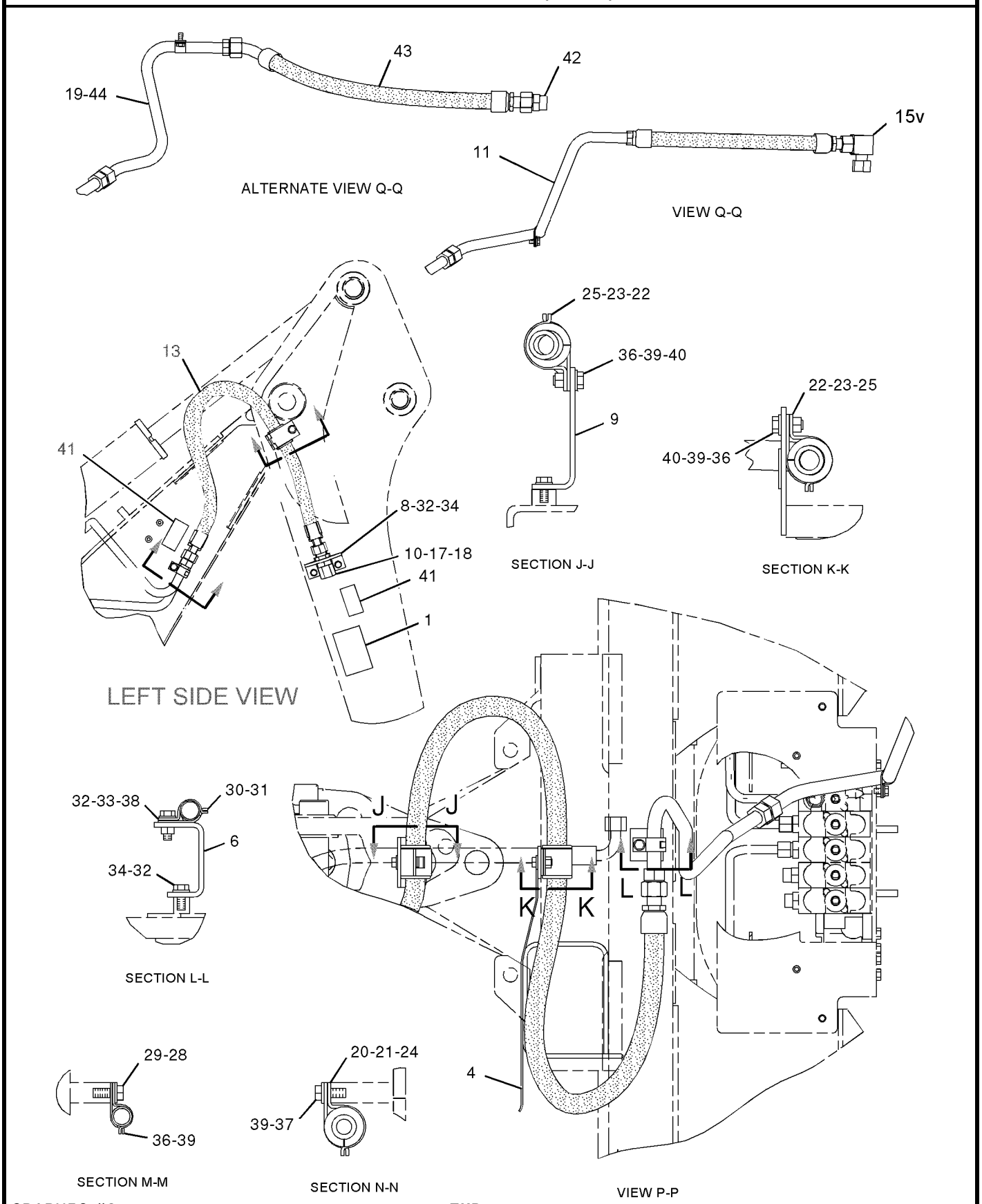


GRAPHIC #2 **<END>** g01032092

# HYDRAULIC SYSTEM

## *199-9695* LINES GP-BACKHOE AUXILIARY–KIT

**S/N: BXC1-UP; DSX1-UP**
**STANDARD STICK, STANDARD FRAME, HAMMER**
**AN ATTACHMENT**

**SMCS-5057** **i01981324**

| NOTE | REF NO | GRAPHIC REF | PART NUMBER | QTY | PART NAME 1 2 3 4 5 6 (PRODUCT LEVEL) | SEE PAGE |
|---|---|---|---|---|---|---|
| | 1 | 1 | **101-0863** | 2 | FILM-INSTRUCTION (RETURN FLOW) | |
| I | 2 | 1 | **106-0409** | 1 | HOSE AS | |
| | 3 | 2 | **107-6696** | 1 | TUBE AS | |
| | 4 | 1 | **107-6697** | 1 | PIN AS | |
| M | | 1 | **8T-3490** | 1 | NUT-WELD (M10X1.5 THD) | |
| | 5 | 1 | **107-6698** | 1 | BRACKET AS | |
| | 6 | 1 | **107-6701** | 1 | TUBE AS | |
| | 7 | 2 | **107-6707** | 1 | BRACKET | |
| | 8 | 1 | **107-6708** | 1 | BRACKET | |
| I | 9 | 1 | **107-6717** | 1 | HOSE AS | |
| | 10 | 1 | **107-6718** | 1 | TUBE AS | |
| | 11 | 1 | **109-1260** | 1 | BRACKET | |
| I | 12 | 1 | **120-0147** | 1 | HOSE AS | |
| | 13 | 1 | **159-0959** | 1 | PIN AS | |
| | | 1 | **9R-2672** | 2 | BOSS (M10X20MM) | |
| | 14 | 2 | **122-0536** | 1 | BRACKET | |
| | 15 | 1 | **123-7637** | 2 | CAP | |
| | 16 | 2 | **168-8192** | 1 | HOSE AS | |
| | 17 | 1 | **168-8193** | 1 | TUBE AS | |
| I | 18 | 1 | **168-8493** | 1 | HOSE AS | |
| I | 19 | 2 | **176-9294** | 1 | HOSE AS | |
| | 20 | 2 | **178-7481** | 1 | VALVE GP-CHECK | |
| | | 2 | **5K-9090** | 2 | SEAL-O-RING | |
| | | 2 | **7M-8485** | 1 | SEAL-O-RING | |
| I | 21 | 1 | **183-8484** | 1 | HOSE AS | |
| | 22 | 2 | **202-6018** | 4 | FILM-WARNING (HIGH PRESSURE CYLINDER) | |
| BI | 23 | 2 | **236-9900** | 1 | HOSE AS | |
| B | 24 | 2 | **236-9980** | 1 | TUBE AS | |
| B | 25 | 2 | *148-8335* | 1 | CONNECTOR AS | |
| | | 2 | **6V-8635** | 1 | CONNECTOR | |
| | | 2 | **5K-9090** | 1 | SEAL-O-RING | |
| | | 2 | **7M-8485** | 1 | SEAL-O-RING | |
| | 26 | 1 | *148-8341* | 1 | CONNECTOR GP | |
| | | 1 | **3D-2824** | 1 | SEAL-O-RING | |
| | | 1 | **6V-8713** | 1 | CONNECTOR | |
| | | 1 | **7J-9108** | 1 | SEAL-O-RING | |
| | 27 | 2 | *148-8352* | 1 | ELBOW GP | |
| | | 2 | **5K-9090** | 1 | SEAL-O-RING | |
| | | 2 | **6V-9854** | 1 | ELBOW (SWIVEL) | |
| | 28 | 2 | *150-3052* | 1 | CONNECTOR AS | |
| | | 2 | **5K-9090** | 1 | SEAL-O-RING | |
| | | 2 | **7M-8485** | 1 | SEAL-O-RING | |
| | | 2 | **107-6709** | 1 | CONNECTOR | |
| | 29 | 2 | *150-3053* | 1 | CONNECTOR AS | |
| | | 2 | **6V-9746** | 1 | SEAL-O-RING | |
| | | 2 | **7M-8485** | 1 | SEAL-O-RING | |
| | | 2 | **108-3872** | 1 | CONNECTOR | |
| | 30 | 1 | *150-3068* | 1 | UNION AS | |
| | | 1 | **5K-9090** | 2 | SEAL-O-RING | |
| | | 1 | **6V-9649** | 1 | UNION-90 DEGREE | |
| | 31 | 2 | **2P-1293** | 2 | LOCKNUT (1 3/16-12 THD) | |
| B | 32 | 1 | **5K-9090** | 5 | SEAL-O-RING | |
| | 33 | 1 | **5P-7466** | 1 | CLIP (SLOT) | |
| | 34 | 2 | **5P-7467** | 1 | CLIP (TAB) | |
| | 35 | 1 | **5P-7468** | 4 | CLIP (SLOT) | |

## *199-9695* LINES GP-BACKHOE AUXILIARY *(contd. )*

i01981324

| NOTE | REF NO | GRAPHIC REF | PART NUMBER | QTY | PART NAME 1 2 3 4 5 6 (PRODUCT LEVEL) | SEE PAGE |
|---|---|---|---|---|---|---|
| | 36 | 1,2 | **5P-7469** | 4 | CLIP (TAB) | |
| | 37 | 2 | **5P-8112** | 1 | GROMMET | |
| | 38 | 2 | **5P-8444** | 4 | GROMMET | |
| M | 39 | 2 | **6V-7744** | 2 | LOCKNUT (M10X1.5 THD) | |
| | 40 | 2 | **6V-9172** | 1 | NUT (1 7/16-12 THD) | |
| | 41 | 2 | **6V-9746** | 3 | SEAL-O-RING | |
| | 42 | 2 | **7S-3916** | 4 | CLIP (TAB) | |
| | 43 | 2 | **7S-3919** | 4 | CLIP (SLOT) | |
| B | 44 | 1 | **8T-1889** | 3 | CLIP (SLOT) | |
| B | 45 | 1,2 | **8T-1890** | 3 | CLIP (TAB) | |
| B | 46 | 2 | **8T-4121** | 11 | WASHER-HARD (11X21X2.5MM THK) | |
| M | 47 | 2 | **8T-4133** | 1 | NUT (M10X1.5 THD) | |
| BM | 48 | 2 | **8T-4136** | 9 | BOLT (M10X1.5X25MM) | |
| M | 49 | 2 | **8T-4137** | 1 | BOLT (M10X1.5X20MM) | |
| M | 50 | 1,2 | **8T-4139** | 9 | BOLT (M12X1.75X30MM) | |
| M | 51 | 2 | **8T-4195** | 1 | BOLT (M10X1.5X30MM) | |
| | 52 | 1,2 | **8T-4223** | 9 | WASHER-HARD (13.5X25.5X3MM THK) | |
| M | 53 | 2 | **8T-4244** | 2 | NUT (M12X1.75 THD) | |

B-USE AS REQUIRED
I-REFER TO HYDRAULIC INFORMATION SYSTEM
M-METRIC PART

*199-9695* **LINES GP-BACKHOE AUXILIARY** *(contd.)* **i01981324**

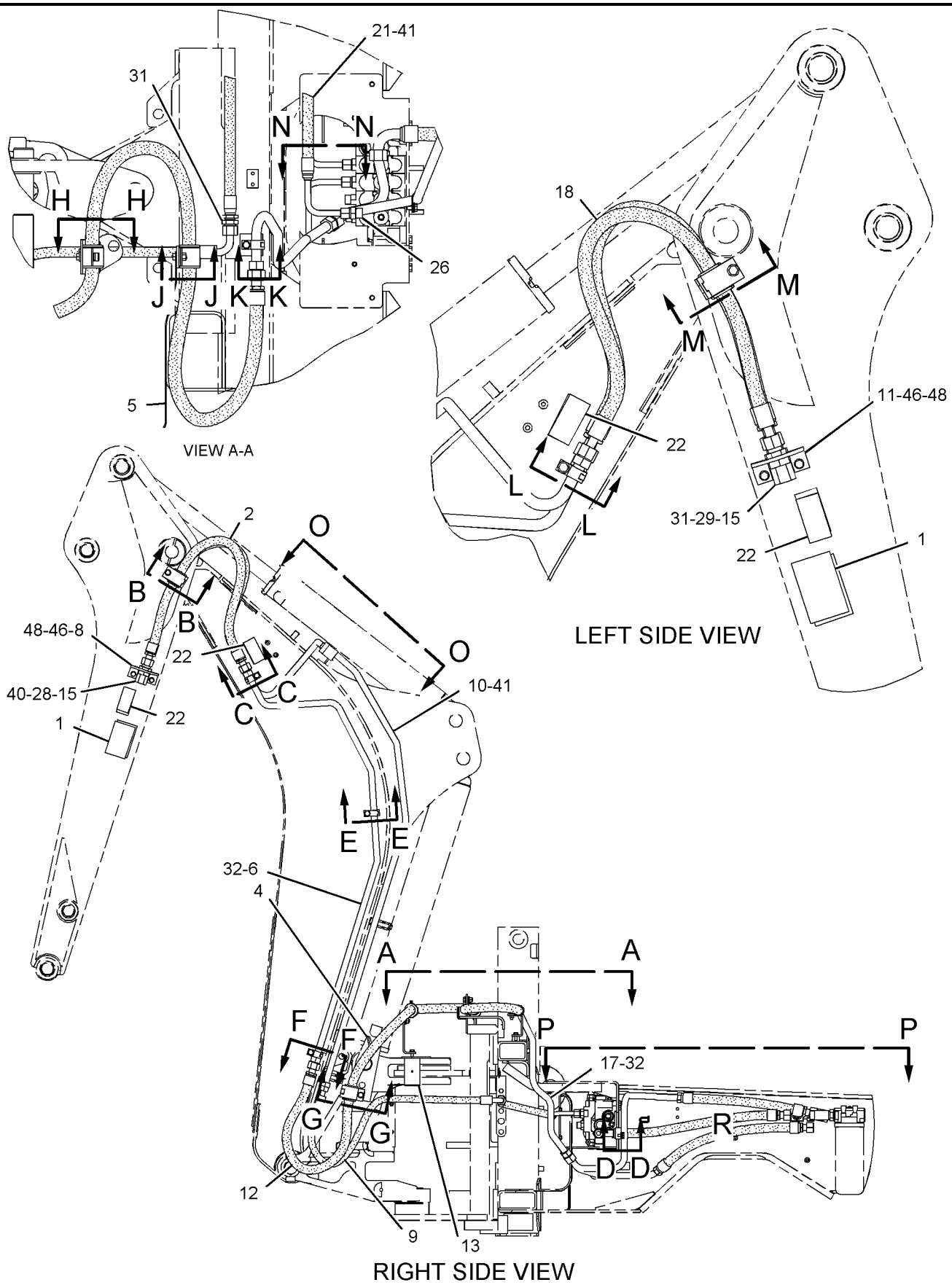


GRAPHIC #1 g01032167

## *199-9695* LINES GP-BACKHOE AUXILIARY *(contd.)* i01981324

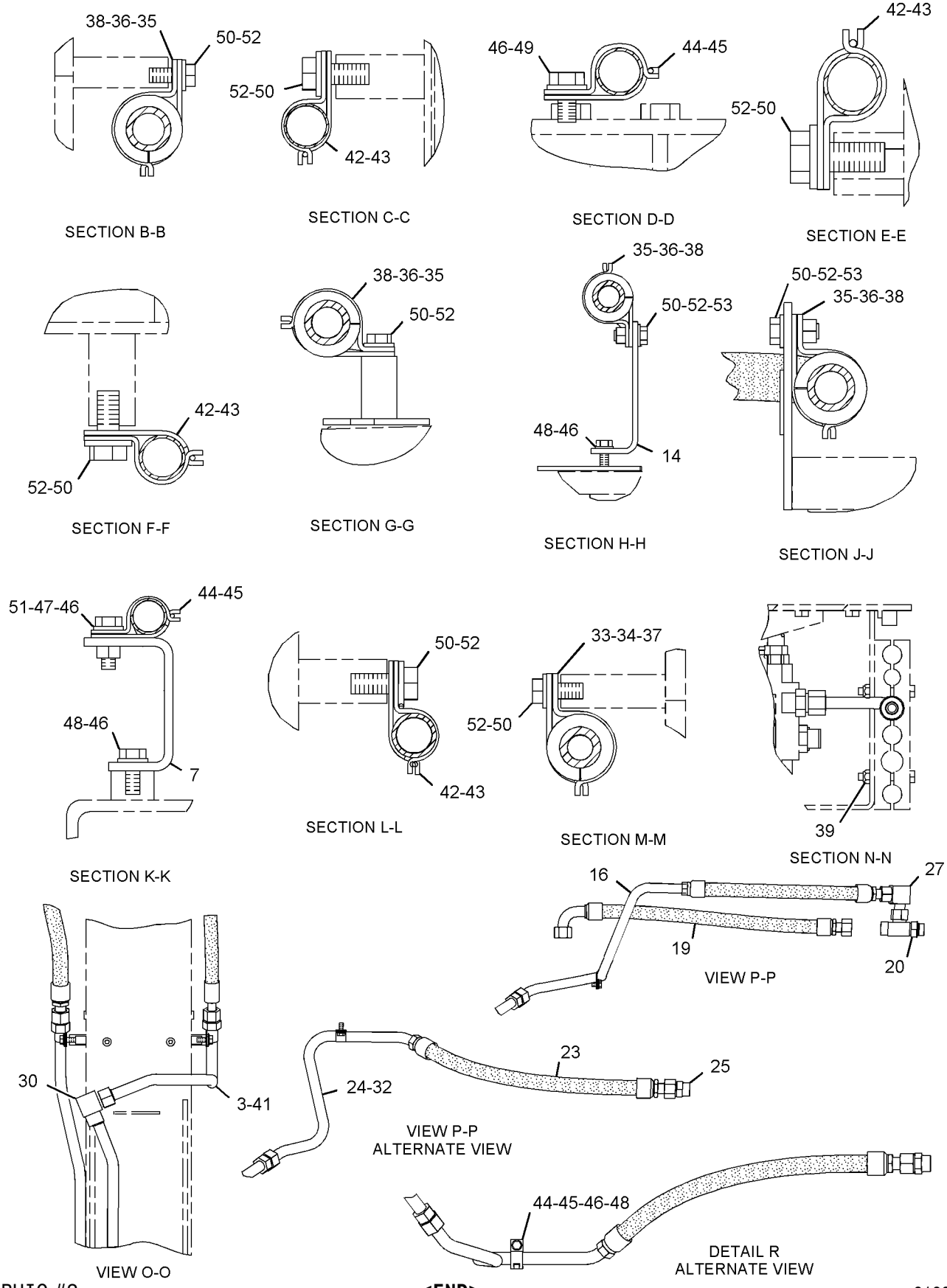


GRAPHIC #2 **<END>** g01032168

# HYDRAULIC SYSTEM

## *199-9696* LINES GP-BACKHOE AUXILIARY–KIT

**S/N: BXC1-UP; DSX1-UP**
**EXTENDABLE STICK, STANDARD FRAME, HAMMER**
**AN ATTACHMENT**

**SMCS-5057** **i01981325**

| NOTE | REF NO | GRAPHIC REF | PART NUMBER | QTY | PART NAME 1 2 3 4 5 6 (PRODUCT LEVEL) | SEE PAGE |
|---|---|---|---|---|---|---|
| | 1 | 1 | **101-0863** | 2 | FILM-INSTRUCTION (RETURN FLOW) | |
| I | 2 | 1 | **106-0409** | 1 | HOSE AS | |
| | 3 | 2 | **107-6696** | 1 | TUBE AS | |
| | 4 | 1 | **107-6698** | 1 | BRACKET AS | |
| | 5 | 1 | **107-6701** | 1 | TUBE AS | |
| | 6 | 2 | **107-6707** | 1 | BRACKET | |
| | 7 | 1 | **107-6708** | 1 | BRACKET | |
| | 8 | 1 | **109-1260** | 1 | BRACKET | |
| I | 9 | 1 | **120-0147** | 1 | HOSE AS | |
| | 10 | 2 | **122-0536** | 1 | BRACKET | |
| | 11 | 1 | **123-7637** | 2 | CAP | |
| | 12 | 2 | **168-8192** | 1 | HOSE AS | |
| | 13 | 1 | **168-8193** | 1 | TUBE AS | |
| I | 14 | 1 | **168-8493** | 1 | HOSE AS | |
| | 15 | 1 | **202-6018** | 4 | FILM-WARNING (HIGH PRESSURE CYLINDER) | |
| BI | 16 | 2 | **236-9900** | 1 | HOSE AS | |
| B | 17 | 2 | **236-9980** | 1 | TUBE AS | |
| B | 18 | 2 | *148-8335* | 1 | CONNECTOR AS | |
| | | 2 | **5K-9090** | 1 | SEAL-O-RING | |
| | | 2 | **7M-8485** | 1 | SEAL-O-RING | |
| | | 2 | **6V-8635** | 1 | CONNECTOR | |
| | 19 | 2 | *148-8352* | 1 | ELBOW GP | |
| | | 2 | **5K-9090** | 1 | SEAL-O-RING | |
| | | 2 | **6V-9854** | 1 | ELBOW (SWIVEL) | |
| | 20 | 1 | *150-3052* | 1 | CONNECTOR AS | |
| | | 1 | **5K-9090** | 1 | SEAL-O-RING | |
| | | 1 | **7M-8485** | 1 | SEAL-O-RING | |
| | | 1 | **107-6709** | 1 | CONNECTOR | |
| | 21 | 1 | *150-3053* | 1 | CONNECTOR AS | |
| | | 1 | **6V-9746** | 1 | SEAL-O-RING | |
| | | 1 | **7M-8485** | 1 | SEAL-O-RING | |
| | | 1 | **108-3872** | 1 | CONNECTOR | |
| | 22 | 1 | **2P-1293** | 1 | LOCKNUT (1 3/16-12 THD) | |
| B | 23 | 1,2 | **5K-9090** | 5 | SEAL-O-RING | |
| | 24 | 2 | **5P-7466** | 1 | CLIP (SLOT) | |
| | 25 | 2 | **5P-7467** | 1 | CLIP (TAB) | |
| | 26 | 2 | **5P-7468** | 4 | CLIP (SLOT) | |
| | 27 | 2 | **5P-7469** | 4 | CLIP (TAB) | |
| | 28 | 2 | **5P-8112** | 1 | GROMMET | |
| | 29 | 2 | **5P-8444** | 4 | GROMMET | |
| | 30 | 1 | **6V-9172** | 1 | NUT (1 7/16-12 THD) | |
| | 31 | 2 | **6V-9746** | 1 | SEAL-O-RING | |
| | 32 | 2 | **7S-3916** | 4 | CLIP (TAB) | |
| | 33 | 2 | **7S-3919** | 4 | CLIP (SLOT) | |
| B | 34 | 2 | **8T-1889** | 3 | CLIP (SLOT) | |
| B | 35 | 2 | **8T-1890** | 3 | CLIP (TAB) | |
| B | 36 | 1,2 | **8T-4121** | 9 | WASHER-HARD (11X21X2.5MM THK) | |
| M | 37 | 2 | **8T-4133** | 1 | NUT (M10X1.5 THD) | |
| BM | 38 | 1,2 | **8T-4136** | 7 | BOLT (M10X1.5X25MM) | |
| M | 39 | 2 | **8T-4137** | 1 | BOLT (M10X1.5X20MM) | |
| M | 40 | 1,2 | **8T-4139** | 6 | BOLT (M12X1.75X30MM) | |
| M | 41 | 2 | **8T-4184** | 2 | BOLT (M12X1.75X45MM) | |
| M | 42 | 1,2 | **8T-4195** | 1 | BOLT (M10X1.5X30MM) | |
| | 43 | 2 | **8T-4223** | 8 | WASHER-HARD (13.5X25.5X3MM THK) | |
| M | 44 | 2 | **8T-4244** | 2 | NUT (M12X1.75 THD) | |

## *199-9696* LINES GP-BACKHOE AUXILIARY *(contd.)* i01981325

B-USE AS REQUIRED
I-REFER TO HYDRAULIC INFORMATION SYSTEM
M-METRIC PART

*199-9696* **LINES GP-BACKHOE AUXILIARY** *(contd.)* **i01981325**

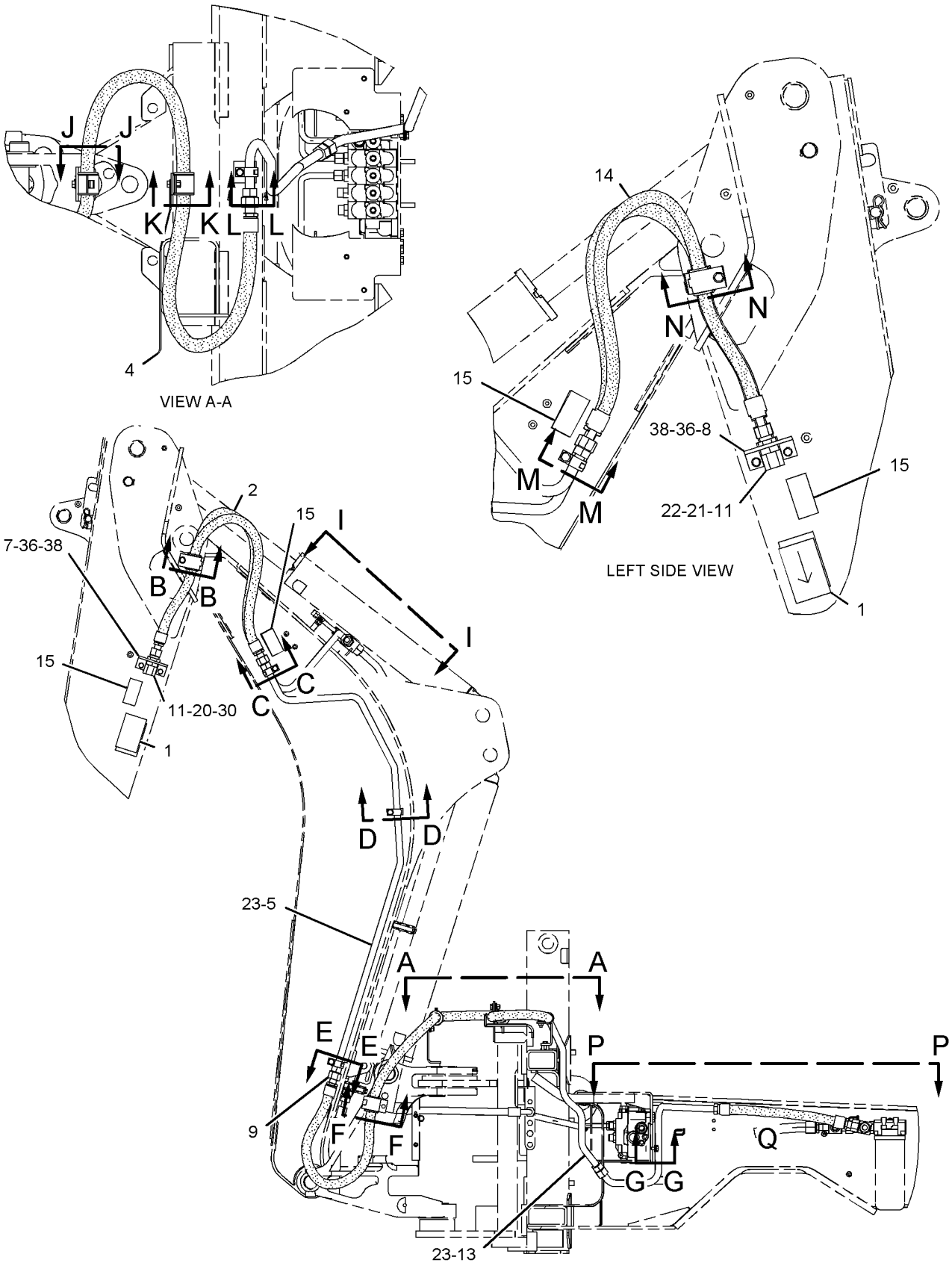


GRAPHIC #1 g01032602

## *199-9696* LINES GP-BACKHOE AUXILIARY *(contd.)* i01981325

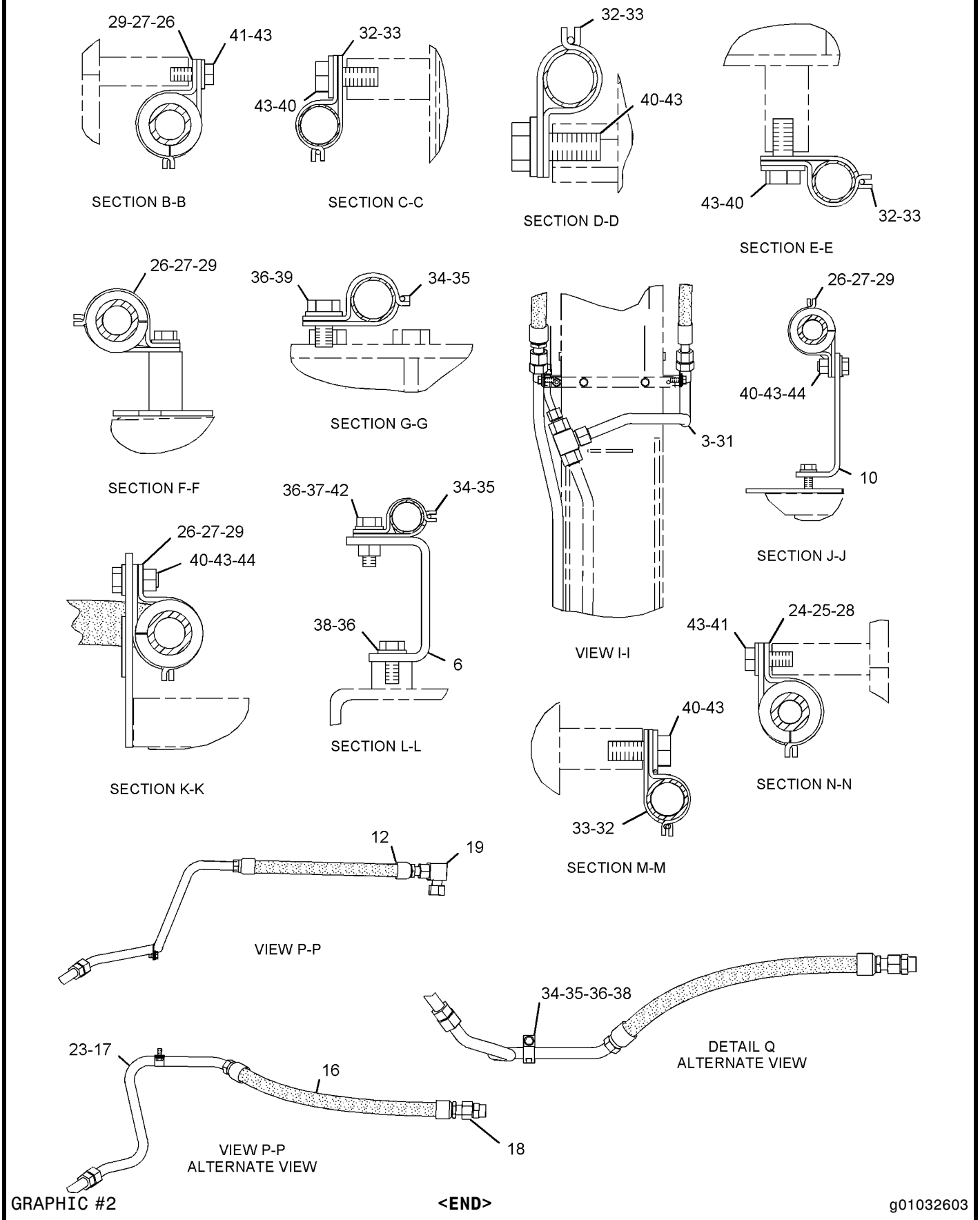


GRAPHIC #2 **<END>** g01032603

# HYDRAULIC SYSTEM

## *235-5862* LINES GP-BACKHOE AUXILIARY—NARROW FRAME

**S/N: DSX1-UP**

**PART OF 240-8695, 240-8696 BACKHOE AR-STANDARD STICK**

**AN ATTACHMENT**

**SMCS-5057** **i01986713**

| NOTE | REF NO | GRAPHIC REF | PART NUMBER | QTY | PART NAME 1 2 3 4 5 6 (PRODUCT LEVEL) | SEE PAGE |
|---|---|---|---|---|---|---|
| | 1 | 1 | **101-0863** | 2 | FILM-INSTRUCTION (RETURN FLOW) | |
| I | 2 | 1 | **106-0409** | 1 | HOSE AS | |
| | 3 | 1 | **107-6696** | 1 | TUBE AS | |
| | 4 | 2 | **107-6698** | 1 | BRACKET AS | |
| | 5 | 1 | **107-6701** | 1 | TUBE AS | |
| | 6 | 2 | **107-6707** | 1 | BRACKET | |
| | 7 | 1 | **107-6708** | 1 | BRACKET | |
| I | 8 | 1 | **107-6717** | 1 | HOSE AS | |
| | 9 | 1 | **107-6718** | 1 | TUBE AS | |
| | 10 | 1 | **109-1260** | 1 | BRACKET | |
| | 11 | 2 | **122-0536** | 1 | BRACKET | |
| | 12 | 1 | **123-7637** | 2 | CAP | |
| | 13 | 1 | **168-8193** | 1 | TUBE AS | |
| I | 14 | 1 | **168-8493** | 1 | HOSE AS | |
| B | 15 | 1 | **202-6018** | 4 | FILM-WARNING (HIGH PRESSURE CYLINDER) | |
| I | 16 | 1 | **204-9204** | 1 | HOSE AS | |
| I | 17 | 1 | **236-9900** | 1 | HOSE AS | |
| | 18 | 1 | **236-9980** | 1 | TUBE AS | |
| | 19 | 1 | *148-8335* | 1 | CONNECTOR AS | |
| | | 1 | **5K-9090** | 1 | SEAL-O-RING | |
| | | 1 | **6V-8635** | 1 | CONNECTOR | |
| | | 1 | **7M-8485** | 1 | SEAL-O-RING | |
| | 20 | 1 | *150-3052* | 1 | CONNECTOR AS | |
| | | 1 | **5K-9090** | 1 | SEAL-O-RING | |
| | | 1 | **7M-8485** | 1 | SEAL-O-RING | |
| | | 1 | **107-6709** | 1 | CONNECTOR | |
| | 21 | 1 | *150-3053* | 1 | CONNECTOR AS | |
| | | 1 | **6V-9746** | 1 | SEAL-O-RING | |
| | | 1 | **7M-8485** | 1 | SEAL-O-RING | |
| | | 1 | **108-3872** | 1 | CONNECTOR | |
| | 22 | 2 | *150-3068* | 1 | UNION AS | |
| | | 2 | **5K-9090** | 2 | SEAL-O-RING | |
| | | 2 | **6V-9649** | 1 | UNION-90 DEGREE | |
| | 23 | 1 | **2P-1293** | 1 | LOCKNUT (1 3/16-12 THD) | |
| | 24 | 1 | **5K-9090** | 5 | SEAL-O-RING | |
| | 25 | 2 | **5P-7466** | 1 | CLIP (SLOT) | |
| | 26 | 2 | **5P-7467** | 1 | CLIP (TAB) | |
| | 27 | 2 | **5P-7468** | 4 | CLIP (SLOT) | |
| | 28 | 2 | **5P-7469** | 4 | CLIP (TAB) | |
| | 29 | 2 | **5P-8112** | 1 | GROMMET | |
| | 30 | 2 | **5P-8444** | 4 | GROMMET | |
| | 31 | 1 | **6V-9172** | 1 | NUT (1 7/16-12 THD) | |
| | 32 | 1 | **6V-9746** | 2 | SEAL-O-RING | |
| | 33 | 2 | **7S-3916** | 4 | CLIP (TAB) | |
| | 34 | 2 | **7S-3919** | 4 | CLIP (SLOT) | |
| | 35 | 2 | **8T-1889** | 2 | CLIP (SLOT) | |
| | 36 | 2 | **8T-1890** | 2 | CLIP (TAB) | |
| | 37 | 1,2 | **8T-4121** | 11 | WASHER-HARD (11X21X2.5MM THK) | |
| M | 38 | 2 | **8T-4133** | 1 | NUT (M10X1.5 THD) | |
| M | 39 | 1,2 | **8T-4136** | 9 | BOLT (M10X1.5X25MM) | |
| M | 40 | 2 | **8T-4139** | 5 | BOLT (M12X1.75X30MM) | |
| M | 41 | 2 | **8T-4184** | 2 | BOLT (M12X1.75X45MM) | |
| M | 42 | 2 | **8T-4195** | 1 | BOLT (M10X1.5X30MM) | |
| | 43 | 2 | **8T-4223** | 11 | WASHER-HARD (13.5X25.5X3MM THK) | |
| M | 44 | 2 | **8T-4244** | 2 | NUT (M12X1.75 THD) | |

## *235-5862* LINES GP-BACKHOE AUXILIARY *(contd. )*

i01986713

| NOTE | REF NO | GRAPHIC REF | PART NUMBER | QTY | PART NAME 1 2 3 4 5 6 (PRODUCT LEVEL) | SEE PAGE |
|---|---|---|---|---|---|---|
| M | 45 | 2 | **8T-4956** | 2 | BOLT (M12X1.75X35MM) | |

B-USE AS REQUIRED
I-REFER TO HYDRAULIC INFORMATION SYSTEM
M-METRIC PART

*235-5862* **LINES GP-BACKHOE AUXILIARY** *(contd. )* **i01986713**

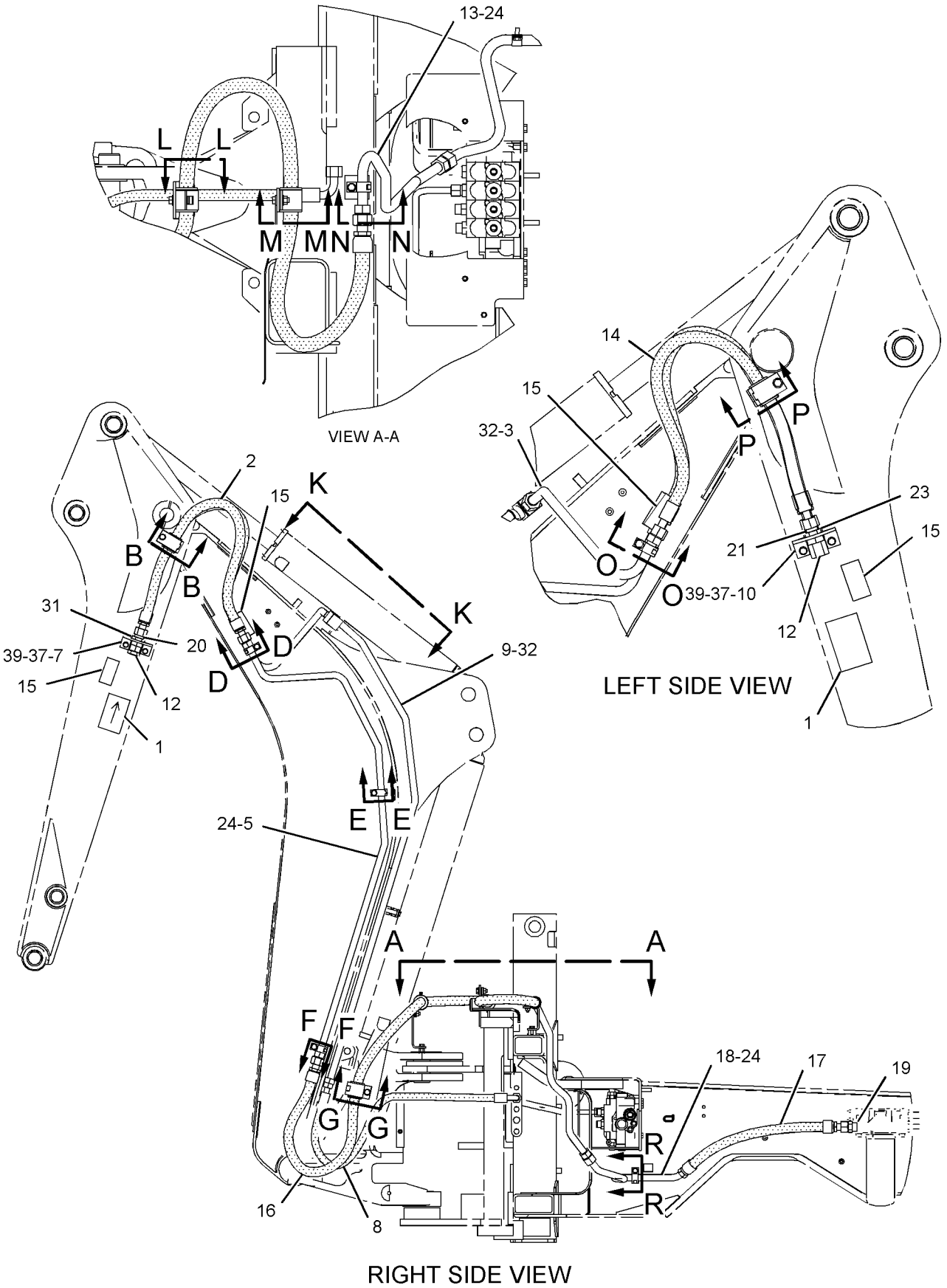


GRAPHIC #1 g01036091

*235-5862* **LINES GP-BACKHOE AUXILIARY** *(contd.)* **i01986713**

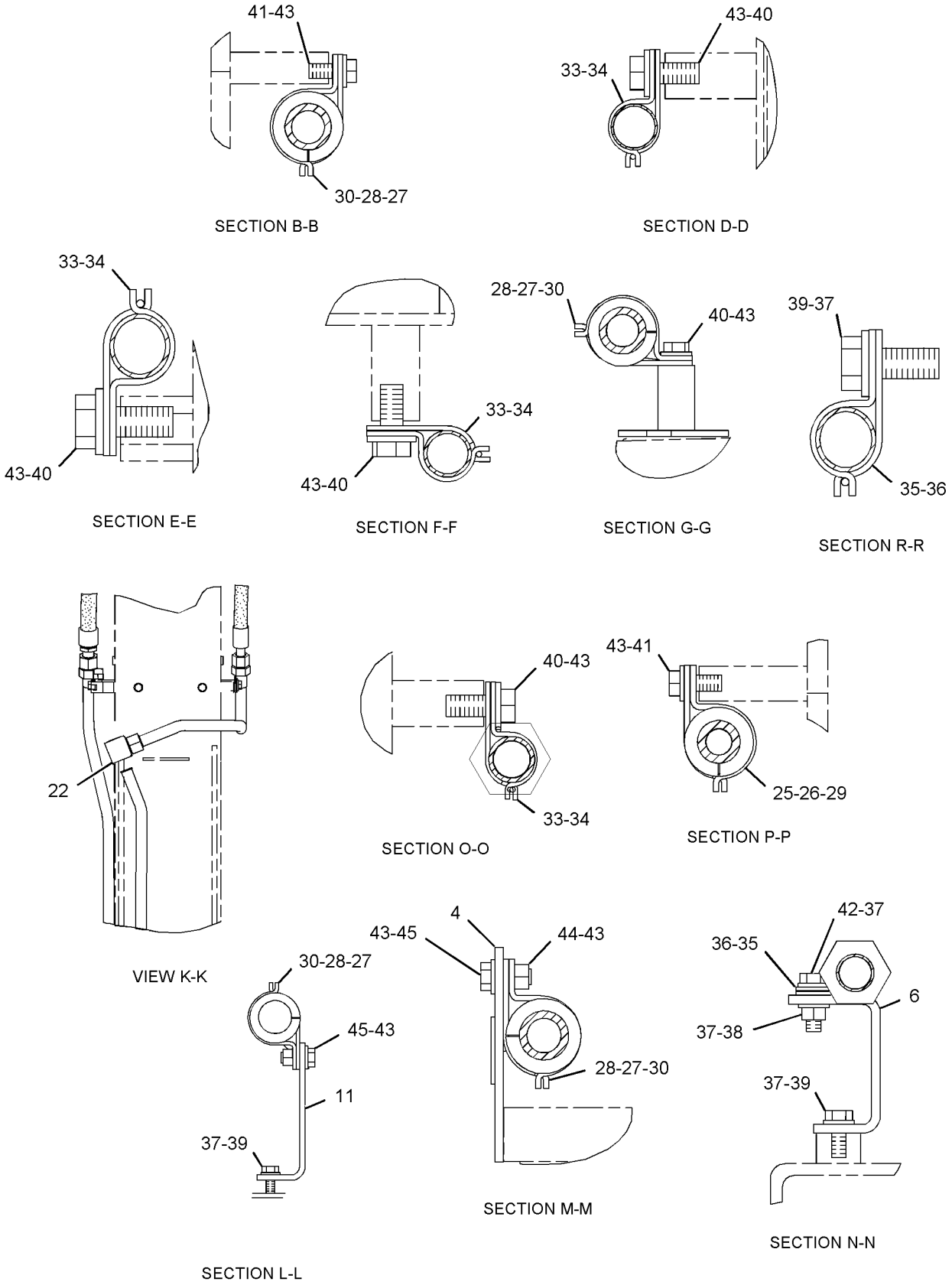


GRAPHIC #2 **<END>** g01036093

# HYDRAULIC SYSTEM

## *235-5864* LINES GP-BACKHOE AUXILIARY—NARROW FRAME

**S/N: BXC1-UP; DSX1-UP**

**PART OF 240-8505, 240-8507, 240-8701, 240-8702 BACKHOE AR-EXTENDABLE STICK AN ATTACHMENT**

**SMCS-5057** **i01986692**

| NOTE | REF NO | GRAPHIC REF | PART NUMBER | QTY | PART NAME 1 2 3 4 5 6 (PRODUCT LEVEL) | SEE PAGE |
|---|---|---|---|---|---|---|
| | 1 | 1 | **101-0863** | 2 | FILM-INSTRUCTION (RETURN FLOW) | |
| I | 2 | 1 | **106-0409** | 1 | HOSE AS | |
| | 3 | 1 | **107-6696** | 1 | TUBE AS | |
| | 4 | 1 | **107-6698** | 1 | BRACKET AS | |
| | 5 | 1 | **107-6701** | 1 | TUBE AS | |
| | 6 | 2 | **107-6707** | 1 | BRACKET | |
| | 7 | 1 | **107-6708** | 1 | BRACKET | |
| I | 8 | 1 | **107-6717** | 1 | HOSE AS | |
| | 9 | 1 | **107-6718** | 1 | TUBE AS | |
| | 10 | 2 | **107-6719** | 1 | TUBE AS | |
| | 11 | 1 | **109-1260** | 1 | BRACKET | |
| | 12 | 2 | **122-0536** | 1 | BRACKET | |
| | 13 | 1 | **123-7637** | 2 | CAP | |
| | 14 | 1 | **168-8193** | 1 | TUBE AS | |
| I | 15 | 1 | **168-8493** | 1 | HOSE AS | |
| B | 16 | 1 | **202-6018** | 4 | FILM-WARNING (HIGH PRESSURE CYLINDER) | |
| I | 17 | 1 | **204-9204** | 1 | HOSE AS | |
| I | 18 | 1 | **236-9900** | 1 | HOSE AS | |
| | 19 | 1 | **236-9980** | 1 | TUBE AS | |
| | 20 | 1 | *148-8335* | 1 | CONNECTOR AS | |
| | | 1 | **5K-9090** | 1 | SEAL-O-RING | |
| | | 1 | **6V-8635** | 1 | CONNECTOR | |
| | | 1 | **7M-8485** | 1 | SEAL-O-RING | |
| | 21 | 1 | *150-3052* | 1 | CONNECTOR AS | |
| | | 1 | **5K-9090** | 1 | SEAL-O-RING | |
| | | 1 | **7M-8485** | 1 | SEAL-O-RING | |
| | | 1 | **107-6709** | 1 | CONNECTOR | |
| | 22 | 1 | *150-3053* | 1 | CONNECTOR AS | |
| | | 1 | **6V-9746** | 1 | SEAL-O-RING | |
| | | 1 | **7M-8485** | 1 | SEAL-O-RING | |
| | | 1 | **108-3872** | 1 | CONNECTOR | |
| | 23 | 2 | *150-3057* | 1 | TEE AS | |
| | | 2 | **5K-9090** | 3 | SEAL-O-RING | |
| | | 2 | **6V-8792** | 1 | TEE-FACE SEAL | |
| | 24 | 2 | *150-3071* | 1 | REDUCER AS | |
| | | 2 | **6V-8945** | 1 | REDUCER-O-RING | |
| | | 2 | **7J-9108** | 1 | SEAL-O-RING | |
| | 25 | 1 | **2P-1293** | 1 | LOCKNUT (1 3/16-12 THD) | |
| | 26 | 1 | **5K-9090** | 5 | SEAL-O-RING | |
| | 27 | 2 | **5P-7466** | 1 | CLIP (SLOT) | |
| | 28 | 2 | **5P-7467** | 1 | CLIP (TAB) | |
| | 29 | 2 | **5P-7468** | 4 | CLIP (SLOT) | |
| | 30 | 2 | **5P-7469** | 4 | CLIP (TAB) | |
| | 31 | 2 | **5P-8112** | 1 | GROMMET | |
| | 32 | 2 | **5P-8444** | 4 | GROMMET | |
| | 33 | 2 | **6V-8398** | 1 | SEAL-O-RING | |
| | 34 | 1 | **6V-9172** | 1 | NUT (1 7/16-12 THD) | |
| | 35 | 1 | **6V-9746** | 2 | SEAL-O-RING | |
| | 36 | 2 | **7S-3916** | 4 | CLIP (TAB) | |
| | 37 | 2 | **7S-3919** | 4 | CLIP (SLOT) | |
| | 38 | 2 | **8T-1889** | 2 | CLIP (SLOT) | |
| | 39 | 2 | **8T-1890** | 2 | CLIP (TAB) | |
| | 40 | 1,2 | **8T-4121** | 12 | WASHER-HARD (11X21X2.5MM THK) | |
| M | 41 | 2 | **8T-4133** | 1 | NUT (M10X1.5 THD) | |
| M | 42 | 1,2 | **8T-4136** | 10 | BOLT (M10X1.5X25MM) | |

## *235-5864* LINES GP-BACKHOE AUXILIARY *(contd. )* i01986692

| NOTE | REF NO | GRAPHIC REF | PART NUMBER | QTY | PART NAME 1 2 3 4 5 6 (PRODUCT LEVEL) | SEE PAGE |
|---|---|---|---|---|---|---|
| M | 43 | 2 | **8T-4139** | 5 | BOLT (M12X1.75X30MM) | |
| M | 44 | 2 | **8T-4184** | 2 | BOLT (M12X1.75X45MM) | |
| M | 45 | 2 | **8T-4195** | 1 | BOLT (M10X1.5X30MM) | |
| | 46 | 2 | **8T-4223** | 11 | WASHER-HARD (13.5X25.5X3MM THK) | |
| M | 47 | 2 | **8T-4244** | 2 | NUT (M12X1.75 THD) | |
| M | 48 | 2 | **8T-4956** | 2 | BOLT (M12X1.75X35MM) | |
| | 49 | 2 | **9R-1004** | 1 | CLIP (TAB) | |
| | 50 | 2 | **9R-1005** | 1 | CLIP (SLOT) | |
| | 51 | 2 | **9X-6579** | 1 | NUT-ORIFICE (7/16-12 THD) | |

B-USE AS REQUIRED
I-REFER TO HYDRAULIC INFORMATION SYSTEM
M-METRIC PART

*235-5864* **LINES GP-BACKHOE AUXILIARY** *(contd.)* **i01986692**

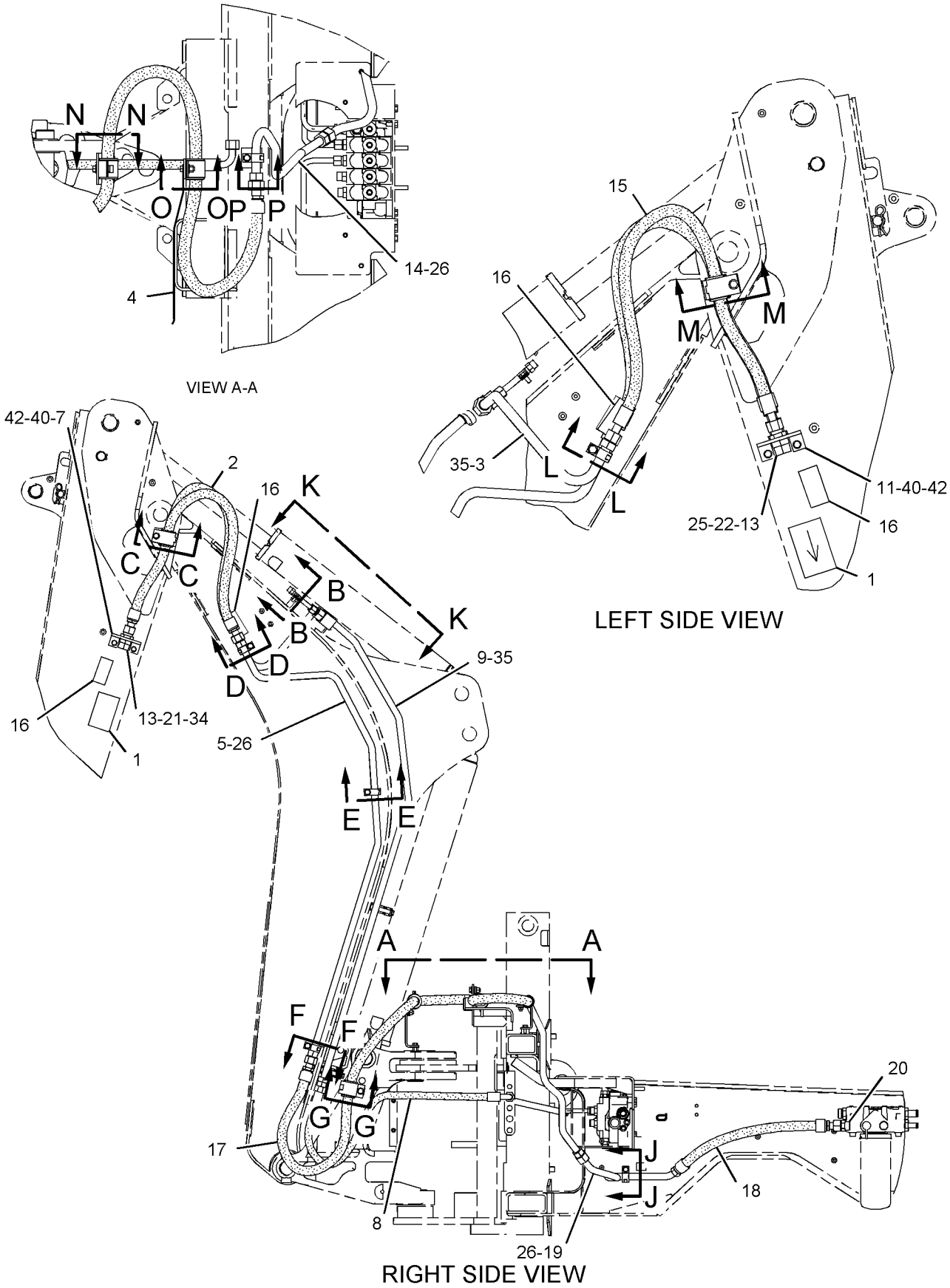


GRAPHIC #1 g01035705

## *235-5864* LINES GP-BACKHOE AUXILIARY *(contd.)* i01986692

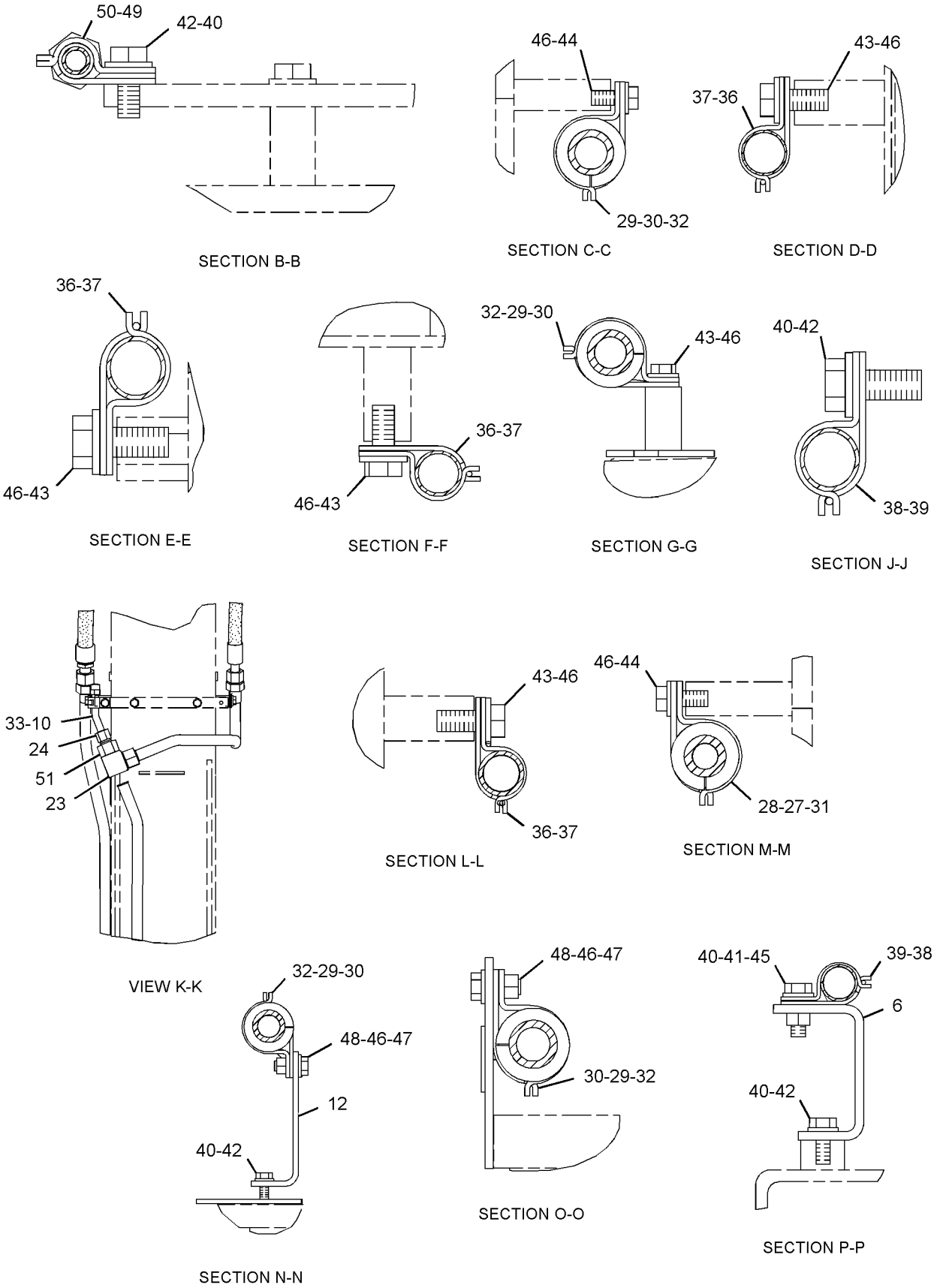


GRAPHIC #2 **<END>** g01035706

# HYDRAULIC SYSTEM

## *235-5865* LINES GP-BACKHOE AUXILIARY

**S/N: BXC1-UP**

**PART OF 240-8685, 240-8686 BACKHOE AR-STANDARD STICK**

**AN ATTACHMENT**

**SMCS-5057** **i01986689**

| NOTE | REF NO | GRAPHIC REF | PART NUMBER | QTY | PART NAME 1 2 3 4 5 6 (PRODUCT LEVEL) | SEE PAGE |
|---|---|---|---|---|---|---|
| | 1 | 1 | **101-0863** | 2 | FILM-INSTRUCTION (RETURN FLOW) | |
| I | 2 | 1 | **106-0409** | 1 | HOSE AS | |
| | 3 | 1 | **107-6696** | 1 | TUBE AS | |
| | 4 | 2 | **107-6698** | 1 | BRACKET AS | |
| | 5 | 1 | **107-6701** | 1 | TUBE AS | |
| | 6 | 2 | **107-6707** | 1 | BRACKET | |
| | 7 | 1 | **107-6708** | 1 | BRACKET | |
| I | 8 | 1 | **107-6717** | 1 | HOSE AS | |
| | 9 | 1 | **107-6718** | 1 | TUBE AS | |
| | 10 | 1 | **109-1260** | 1 | BRACKET | |
| I | 11 | 1 | **120-0147** | 1 | HOSE AS | |
| | 12 | 2 | **122-0536** | 1 | BRACKET | |
| | 13 | 1 | **123-7637** | 2 | CAP | |
| | 14 | 1 | **168-8193** | 1 | TUBE AS | |
| I | 15 | 1 | **168-8493** | 1 | HOSE AS | |
| B | 16 | 1 | **202-6018** | 4 | FILM-WARNING (HIGH PRESSURE CYLINDER) | |
| I | 17 | 1 | **236-9900** | 1 | HOSE AS | |
| | 18 | 1 | **236-9980** | 1 | TUBE AS | |
| | 19 | 1 | *148-8335* | 1 | CONNECTOR AS | |
| | | 1 | **5K-9090** | 1 | SEAL-O-RING | |
| | | 1 | **6V-8635** | 1 | CONNECTOR | |
| | | 1 | **7M-8485** | 1 | SEAL-O-RING | |
| | 20 | 1 | *150-3052* | 1 | CONNECTOR AS | |
| | | 1 | **5K-9090** | 1 | SEAL-O-RING | |
| | | 1 | **7M-8485** | 1 | SEAL-O-RING | |
| | | 1 | **107-6709** | 1 | CONNECTOR | |
| | 21 | 1 | *150-3053* | 1 | CONNECTOR AS | |
| | | 1 | **6V-9746** | 1 | SEAL-O-RING | |
| | | 1 | **7M-8485** | 1 | SEAL-O-RING | |
| | | 1 | **108-3872** | 1 | CONNECTOR | |
| | 22 | 2 | *150-3068* | 1 | UNION AS | |
| | | 2 | **5K-9090** | 2 | SEAL-O-RING | |
| | | 2 | **6V-9649** | 1 | UNION-90 DEGREE | |
| | 23 | 1 | **2P-1293** | 1 | LOCKNUT (1 3/16-12 THD) | |
| | 24 | 1 | **5K-9090** | 5 | SEAL-O-RING | |
| | 25 | 2 | **5P-7466** | 1 | CLIP (SLOT) | |
| | 26 | 2 | **5P-7467** | 1 | CLIP (TAB) | |
| | 27 | 2 | **5P-7468** | 4 | CLIP (SLOT) | |
| | 28 | 2 | **5P-7469** | 4 | CLIP (TAB) | |
| | 29 | 2 | **5P-8112** | 1 | GROMMET | |
| | 30 | 2 | **5P-8444** | 4 | GROMMET | |
| | 31 | 1 | **6V-9172** | 1 | NUT (1 7/16-12 THD) | |
| | 32 | 1 | **6V-9746** | 2 | SEAL-O-RING | |
| | 33 | 2 | **7S-3916** | 4 | CLIP (TAB) | |
| | 34 | 2 | **7S-3919** | 4 | CLIP (SLOT) | |
| | 35 | 2 | **8T-1889** | 2 | CLIP (SLOT) | |
| | 36 | 2 | **8T-1890** | 2 | CLIP (TAB) | |
| | 37 | 1,2 | **8T-4121** | 11 | WASHER-HARD (11X21X2.5MM THK) | |
| M | 38 | 2 | **8T-4133** | 1 | NUT (M10X1.5 THD) | |
| M | 39 | 1,2 | **8T-4136** | 9 | BOLT (M10X1.5X25MM) | |
| M | 40 | 2 | **8T-4139** | 5 | BOLT (M12X1.75X30MM) | |
| M | 41 | 2 | **8T-4184** | 2 | BOLT (M12X1.75X45MM) | |
| M | 42 | 2 | **8T-4195** | 1 | BOLT (M10X1.5X30MM) | |
| | 43 | 2 | **8T-4223** | 11 | WASHER-HARD (13.5X25.5X3MM THK) | |
| M | 44 | 2 | **8T-4244** | 2 | NUT (M12X1.75 THD) | |

## *235-5865* LINES GP-BACKHOE AUXILIARY *(contd. )* i01986689

| NOTE | REF NO | GRAPHIC REF | PART NUMBER | QTY | PART NAME 1 2 3 4 5 6 (PRODUCT LEVEL) | SEE PAGE |
|---|---|---|---|---|---|---|
| M | 45 | 2 | **8T-4956** | 2 | BOLT (M12X1.75X35MM) | |

B-USE AS REQUIRED
I-REFER TO HYDRAULIC INFORMATION SYSTEM
M-METRIC PART

*235-5865* **LINES GP-BACKHOE AUXILIARY** *(contd.)* **i01986689**

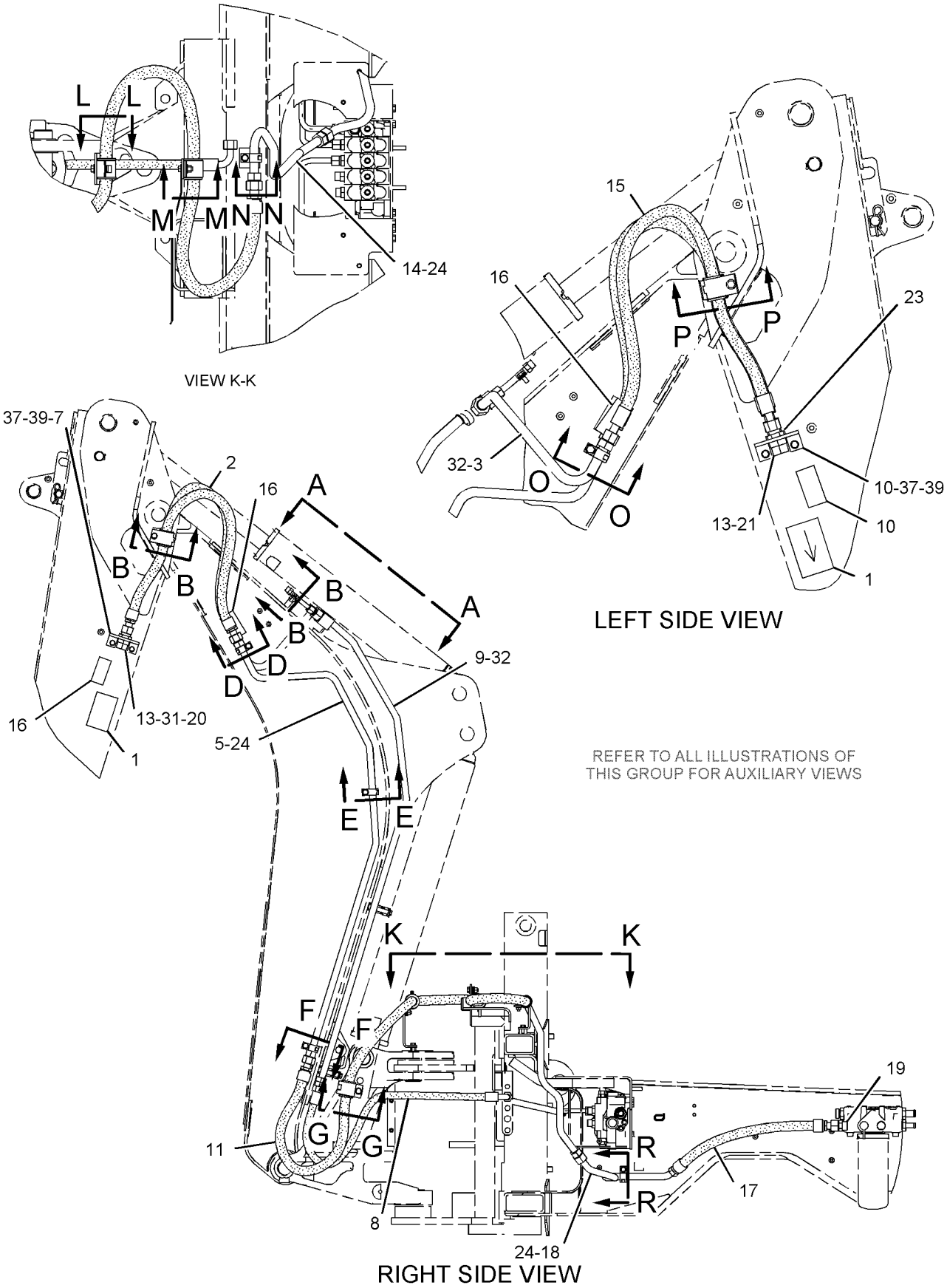


GRAPHIC #1 g01035938

## *235-5865* LINES GP-BACKHOE AUXILIARY *(contd.)* i01986689

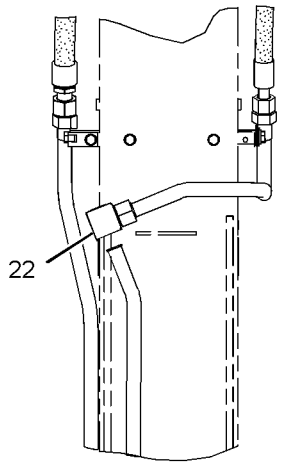


VIEW A-A

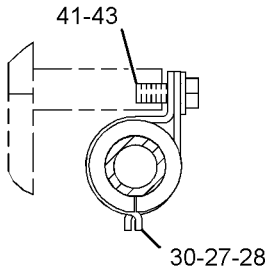


SECTION B-B

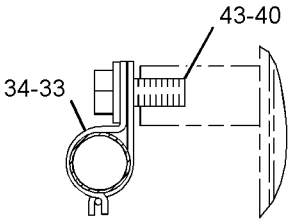


SECTION D-D

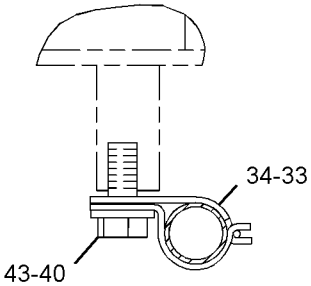


SECTION F-F

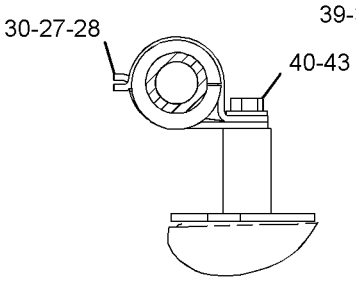


SECTION G-G

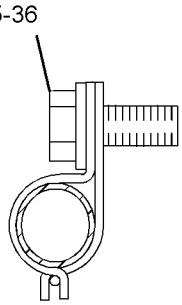


SECTION R-R

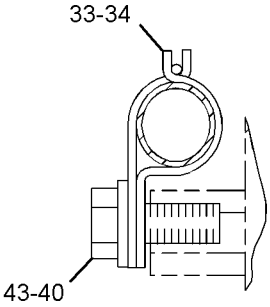


SECTION E-E

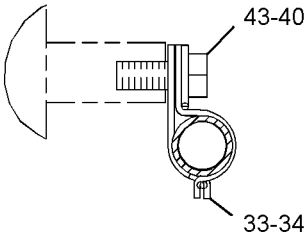


SECTION O-O

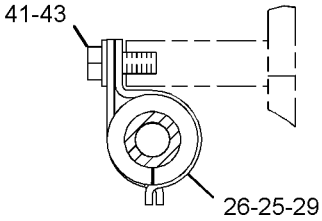


SECTION P-P

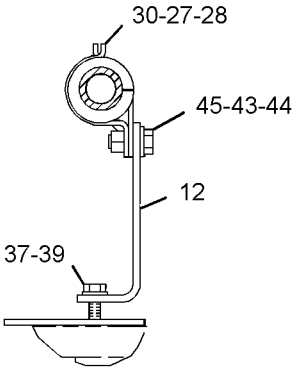


SECTION L-L

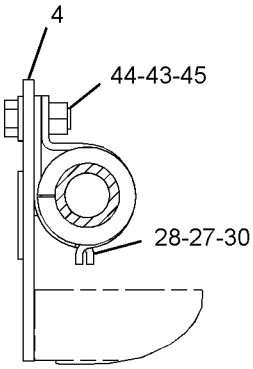


SECTION M-M

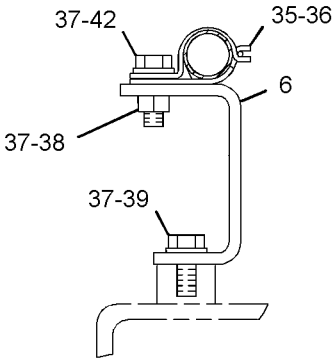


SECTION P-P

GRAPHIC #2 **<END>** g01035939

# HYDRAULIC SYSTEM

## *235-5867* LINES GP-BACKHOE AUXILIARY

**S/N: BXC1-UP; DSX1-UP**

**PART OF 240-8492, 240-8493, 240-8691, 240-8692 BACKHOE AR-EXTENDABLE STICK AN ATTACHMENT**

**SMCS-5057** **i01986652**

| NOTE | REF NO | GRAPHIC REF | PART NUMBER | QTY | PART NAME 1 2 3 4 5 6 (PRODUCT LEVEL) | SEE PAGE |
|---|---|---|---|---|---|---|
| | 1 | 1 | **101-0863** | 2 | FILM-INSTRUCTION (RETURN FLOW) | |
| I | 2 | 1 | **106-0409** | 1 | HOSE AS | |
| | 3 | 1 | **107-6696** | 1 | TUBE AS | |
| | 4 | 2 | **107-6698** | 1 | BRACKET AS | |
| | 5 | 1 | **107-6701** | 1 | TUBE AS | |
| | 6 | 2 | **107-6707** | 1 | BRACKET | |
| | 7 | 1 | **107-6708** | 1 | BRACKET | |
| I | 8 | 1 | **107-6717** | 1 | HOSE AS | |
| | 9 | 1 | **107-6718** | 1 | TUBE AS | |
| | 10 | 2 | **107-6719** | 1 | TUBE AS | |
| | 11 | 1 | **109-1260** | 1 | BRACKET | |
| I | 12 | 1 | **120-0147** | 1 | HOSE AS | |
| | 13 | 2 | **122-0536** | 1 | BRACKET | |
| | 14 | 1 | **123-7637** | 2 | CAP | |
| | 15 | 1 | **168-8193** | 1 | TUBE AS | |
| I | 16 | 1 | **168-8493** | 1 | HOSE AS | |
| B | 17 | 1 | **202-6018** | 4 | FILM-WARNING (HIGH PRESSURE CYLINDER) | |
| I | 18 | 1 | **236-9900** | 1 | HOSE AS | |
| | 19 | 1 | **236-9980** | 1 | TUBE AS | |
| | 20 | 1 | *148-8335* | 1 | CONNECTOR AS | |
| | | 1 | **5K-9090** | 1 | SEAL-O-RING | |
| | | 1 | **6V-8635** | 1 | CONNECTOR | |
| | | 1 | **7M-8485** | 1 | SEAL-O-RING | |
| | 21 | 1 | *150-3052* | 1 | CONNECTOR AS | |
| | | 1 | **5K-9090** | 1 | SEAL-O-RING | |
| | | 1 | **7M-8485** | 1 | SEAL-O-RING | |
| | | 1 | **107-6709** | 1 | CONNECTOR | |
| | 22 | 1 | *150-3053* | 1 | CONNECTOR AS | |
| | | 1 | **6V-9746** | 1 | SEAL-O-RING | |
| | | 1 | **7M-8485** | 1 | SEAL-O-RING | |
| | | 1 | **108-3872** | 1 | CONNECTOR | |
| | 23 | 2 | *150-3057* | 1 | TEE AS | |
| | | 2 | **5K-9090** | 3 | SEAL-O-RING | |
| | | 2 | **6V-8792** | 1 | TEE-FACE SEAL | |
| | 24 | 2 | *150-3071* | 1 | REDUCER AS | |
| | | 2 | **6V-8945** | 1 | REDUCER-O-RING | |
| | | 2 | **7J-9108** | 1 | SEAL-O-RING | |
| | 25 | 1 | **2P-1293** | 1 | LOCKNUT (1 3/16-12 THD) | |
| | 26 | 1 | **5K-9090** | 5 | SEAL-O-RING | |
| | 27 | 2 | **5P-7466** | 1 | CLIP (SLOT) | |
| | 28 | 2 | **5P-7467** | 1 | CLIP (TAB) | |
| | 29 | 2 | **5P-7468** | 4 | CLIP (SLOT) | |
| | 30 | 2 | **5P-7469** | 4 | CLIP (TAB) | |
| | 31 | 2 | **5P-8112** | 1 | GROMMET | |
| | 32 | 2 | **5P-8444** | 4 | GROMMET | |
| | 33 | 2 | **6V-8398** | 1 | SEAL-O-RING | |
| | 34 | 1 | **6V-9172** | 1 | NUT (1 7/16-12 THD) | |
| | 35 | 1 | **6V-9746** | 2 | SEAL-O-RING | |
| | 36 | 2 | **7S-3916** | 4 | CLIP (TAB) | |
| | 37 | 2 | **7S-3919** | 4 | CLIP (SLOT) | |
| | 38 | 2 | **8T-1889** | 2 | CLIP (SLOT) | |
| | 39 | 2 | **8T-1890** | 2 | CLIP (TAB) | |
| | 40 | 1,2 | **8T-4121** | 12 | WASHER-HARD (11X21X2.5MM THK) | |
| M | 41 | 2 | **8T-4133** | 1 | NUT (M10X1.5 THD) | |
| M | 42 | 1,2 | **8T-4136** | 10 | BOLT (M10X1.5X25MM) | |

## *235-5867* LINES GP-BACKHOE AUXILIARY *(contd. )* i01986652

| NOTE | REF NO | GRAPHIC REF | PART NUMBER | QTY | PART NAME 1 2 3 4 5 6 (PRODUCT LEVEL) | SEE PAGE |
|---|---|---|---|---|---|---|
| M | 43 | 2 | **8T-4139** | 5 | BOLT (M12X1.75X30MM) | |
| M | 44 | 2 | **8T-4184** | 2 | BOLT (M12X1.75X45MM) | |
| M | 45 | 2 | **8T-4195** | 1 | BOLT (M10X1.5X30MM) | |
| | 46 | 2 | **8T-4223** | 11 | WASHER-HARD (13.5X25.5X3MM THK) | |
| M | 47 | 2 | **8T-4244** | 2 | NUT (M12X1.75 THD) | |
| M | 48 | 2 | **8T-4956** | 2 | BOLT (M12X1.75X35MM) | |
| | 49 | 2 | **9R-1004** | 1 | CLIP (TAB) | |
| | 50 | 2 | **9R-1005** | 1 | CLIP (SLOT) | |
| | 51 | 2 | **9X-6579** | 1 | NUT-ORIFICE (7/16-12 THD) | |

B-USE AS REQUIRED
I-REFER TO HYDRAULIC INFORMATION SYSTEM
M-METRIC PART

*235-5867* **LINES GP-BACKHOE AUXILIARY** *(contd.)* **i01986652**

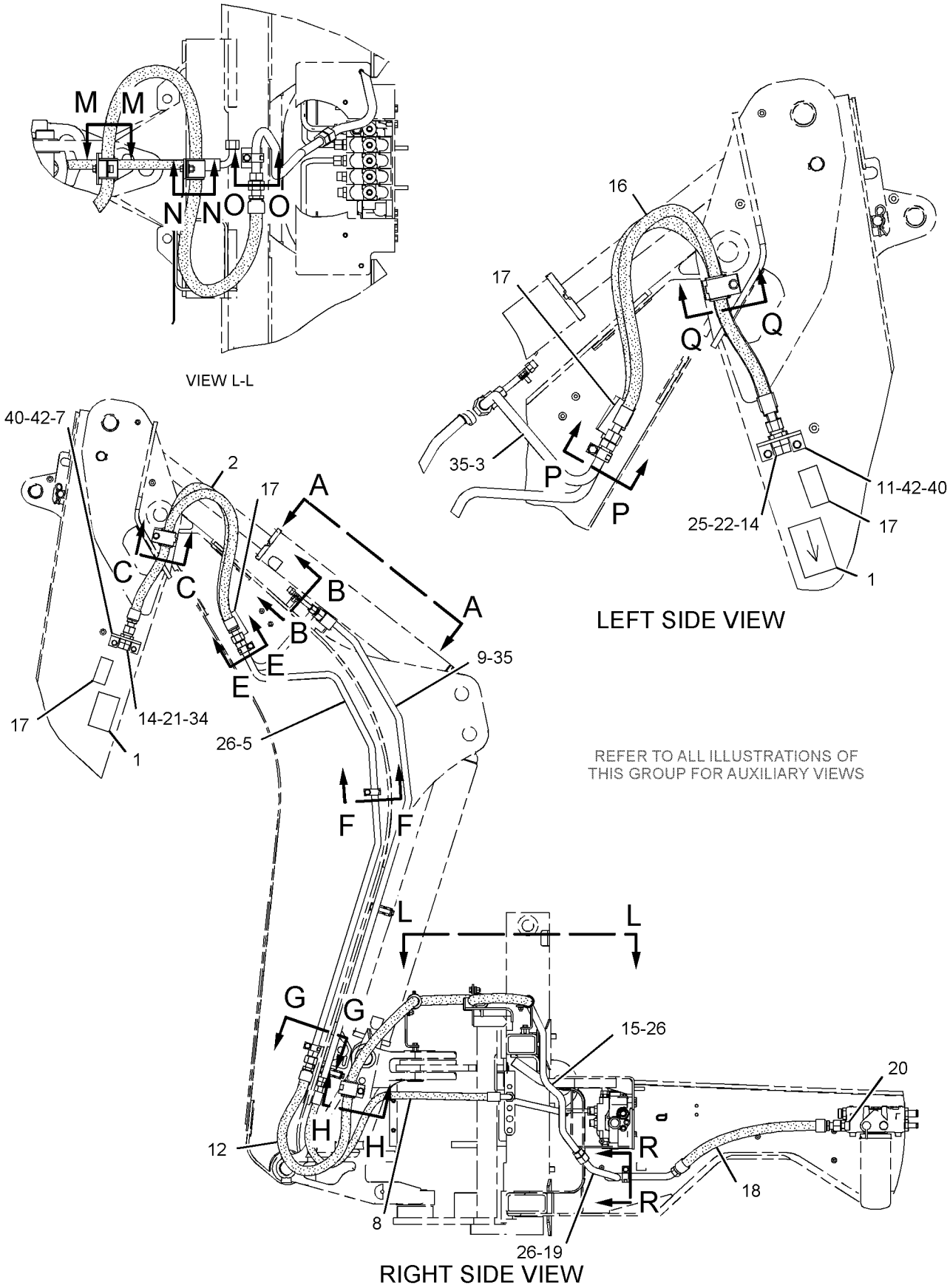


GRAPHIC #1 g01035971

## *235-5867* LINES GP-BACKHOE AUXILIARY *(contd.)* i01986652

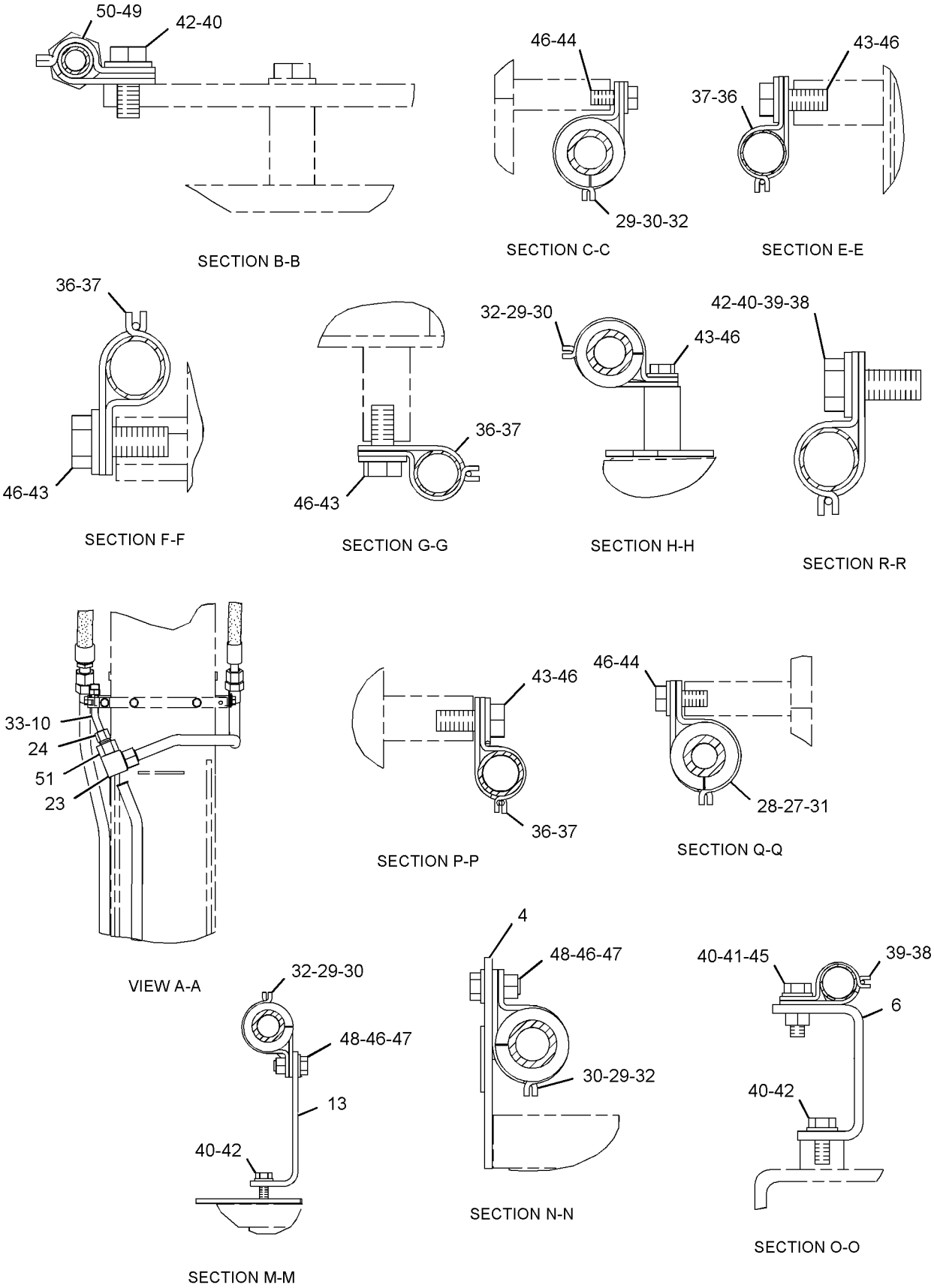


GRAPHIC #2 **<END>** g01035972

# HYDRAULIC SYSTEM

## *183-8543* LINES GP-BOOM

**S/N: BXC1-UP; DSX1-UP**

**PART OF 240-8490, 240-8492, 240-8504, 240-8505, 240-8689, 240-8691, 240-8699, 240-8701 BACKHOE AR-EXTENDABLE STICK, 240-8683, 240-8685, 240-8687, 240-8693, 240-8695, 240-8697 BACKHOE AR-STANDARD STICK**

**AN ATTACHMENT**

**SMCS-5057, 5456** **i01626765**

| NOTE | REF NO | GRAPHIC REF | PART NUMBER | QTY | PART NAME 1 2 3 4 5 6 (PRODUCT LEVEL) | SEE PAGE |
|---|---|---|---|---|---|---|
| | 1 | 1 | **5P-0599** | 1 | CLAMP | |
| | 2 | 1 | **9R-4619** | 1 | SUPPORT AS | |
| I | 3 | 1 | **183-4843** | 1 | HOSE AS | |
| I | 4 | 1 | **199-8927** | 1 | HOSE AS | |
| | 5 | 1 | **207-5477** | 1 | TUBE AS | |
| | 6 | 1 | *148-8327* | 1 | CONNECTOR GP | |
| | | 1 | **3D-2824** | 1 | SEAL-O-RING | |
| | | 1 | **6V-8637** | 1 | CONNECTOR-SEAL | |
| | | 1 | **6V-9746** | 1 | SEAL-O-RING | |
| | 7 | 1 | **7J-9108** | 1 | SEAL-O-RING | |
| | 8 | 1 | **8T-1887** | 1 | CLIP (SLOT) | |
| | 9 | 1 | **8T-1888** | 1 | CLIP (TAB) | |
| | 10 | 1 | **8T-4121** | 1 | WASHER-HARD (11X21X2.5MM THK) | |
| M | 11 | 1 | **8T-4137** | 1 | BOLT (M10X1.5X20MM) | |

I-SEE HOSE FABRICATION GUIDE
M-METRIC PART

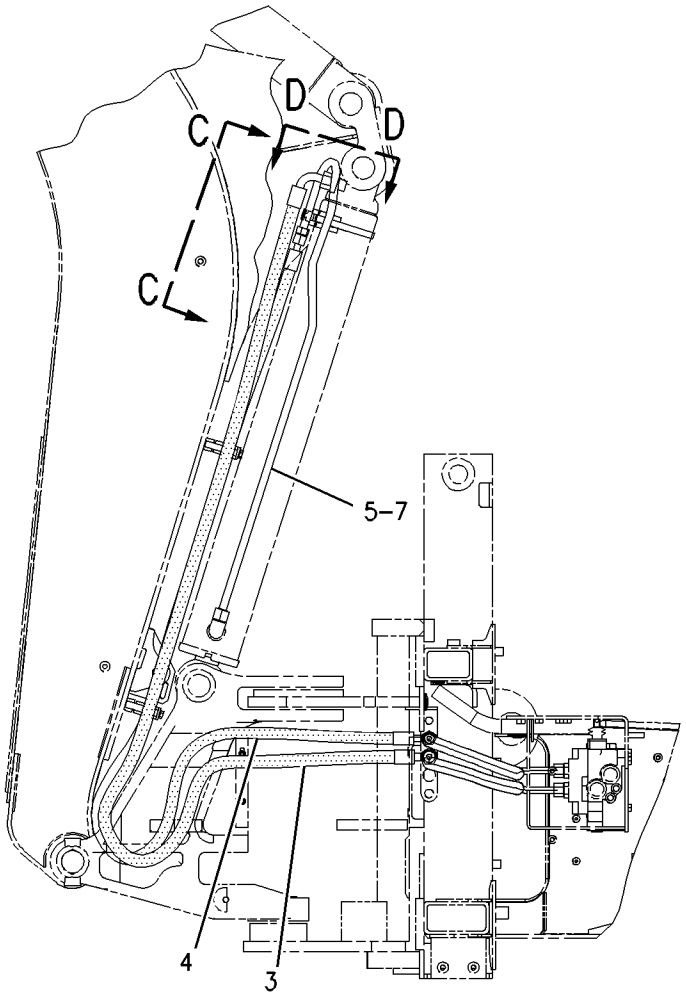


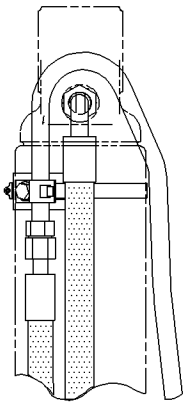

VIEW C-C

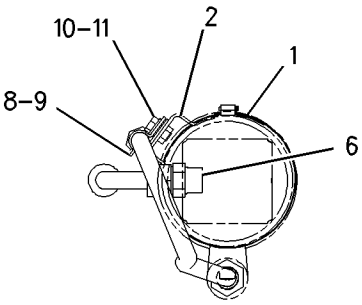


VIEW D-D

GRAPHIC #1 **<END>** g00842621

# HYDRAULIC SYSTEM

## *193-0703* LINES GP-BUCKET CYLINDER

**S/N: BXC1-UP; DSX1-UP**

**PART OF 240-8683, 240-8684, 240-8685, 240-8686, 240-8687, 240-8688, 240-8693, 240-8694, 240-8695, 240-8696, 240-8697, 240-8698 BACKHOE AR-STANDARD STICK AN ATTACHMENT**

**SMCS-5057, 5457** **i01650104**

| NOTE | REF NO | GRAPHIC REF | PART NUMBER | QTY | PART NAME 1 2 3 4 5 6 (PRODUCT LEVEL) | SEE PAGE |
|---|---|---|---|---|---|---|
| | 1 | 1 | **5P-0599** | 2 | CLAMP | |
| | 2 | 1 | **9R-5948** | 1 | BLOCK | |
| I | 3 | 1 | **9R-9218** | 1 | HOSE AS | |
| I | 4 | 1 | **9R-9221** | 1 | HOSE AS | |
| | 5 | 1 | **187-4343** | 1 | TUBE AS | |
| | 6 | 1 | **195-0268** | 1 | BRACKET AS | |
| I | 7 | 1 | **197-0573** | 1 | HOSE AS | |
| | 8 | 1 | **212-9338** | 1 | HOSE AS | |
| | 9 | 1 | *148-8362* | 1 | ELBOW GP | |
| | | 1 | **3D-2824** | 1 | SEAL-O-RING | |
| | | 1 | **5K-9090** | 1 | SEAL-O-RING | |
| | | 1 | **8T-6684** | 1 | ELBOW | |
| | 10 | 1 | *148-8455* | 1 | UNION GP | |
| | | 1 | **6V-8997** | 1 | UNION | |
| | | 1 | **6V-9746** | 2 | SEAL-O-RING | |
| | 11 | 1 | *148-8457* | 1 | UNION GP | |
| | | 1 | **6V-8398** | 2 | SEAL-O-RING | |
| | | 1 | **6V-8995** | 1 | UNION-BULKHEAD | |
| | 12 | 1 | **2P-1293** | 1 | LOCKNUT-BULKHEAD (1 3/16-12 THD) | |
| | 13 | 1 | **5P-7464** | 1 | CLIP (SLOT) | |
| | 14 | 1 | **5P-7465** | 1 | CLIP (TAB) | |
| | 15 | 1 | **5P-7466** | 1 | CLIP (SLOT) | |
| | 16 | 1 | **5P-7467** | 1 | CLIP (TAB) | |
| | 17 | 1 | **5P-8112** | 1 | GROMMET | |
| | 18 | 1 | **6V-1249** | 1 | GROMMET | |
| | 19 | 1 | **6V-9169** | 1 | NUT-BULKHEAD (13/16-16 THD) | |
| | 20 | 1 | **6V-9746** | 1 | SEAL-O-RING | |
| | 21 | 1 | **8T-1889** | 1 | CLIP (SLOT) | |
| | 22 | 1 | **8T-1890** | 1 | CLIP (TAB) | |
| | 23 | 1 | **8T-4121** | 1 | WASHER-HARD (11X21X2.5MM THK) | |
| M | 24 | 1 | **8T-4137** | 1 | BOLT (M10X1.5X20MM) | |
| M | 25 | 1 | **8T-4139** | 2 | BOLT (M12X1.75X30MM) | |
| | 26 | 1 | **8T-4223** | 2 | WASHER-HARD (13.5X25.5X3MM THK) | |

I-SEE HOSE FABRICATION GUIDE
M-METRIC PART

*193-0703* **LINES GP-BUCKET CYLINDER** ***(contd. )*** **i01650104**

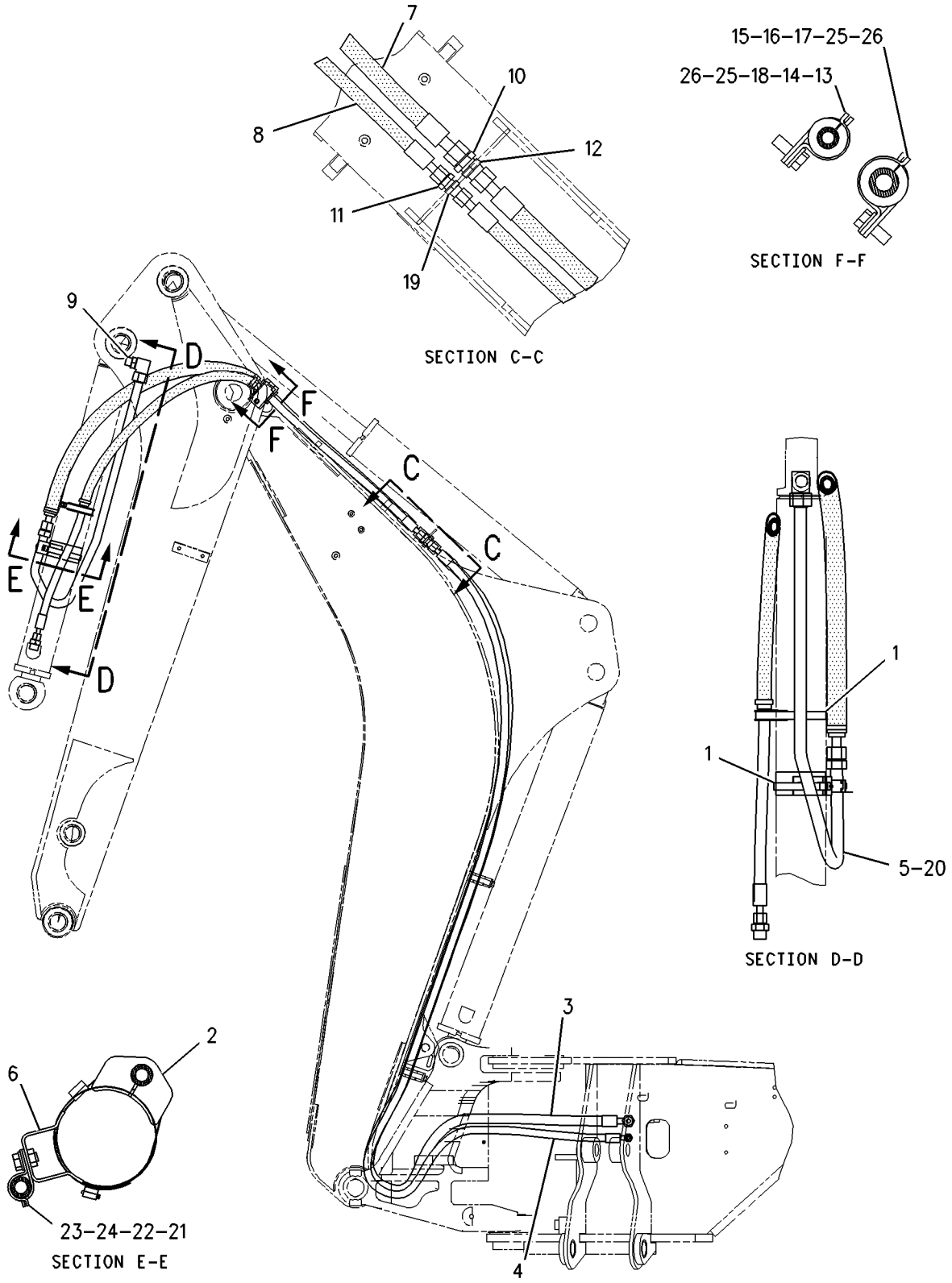


GRAPHIC #1 **<END>** g00852576

# HYDRAULIC SYSTEM

## *186-1593* LINES GP-DRAIN

**S/N: BXC1-UP; DSX1-UP**
**BOOM AND STICK LOCKS, STANDARD FRAME**
**PART OF 240-8507, 240-8700, 240-8702 BACKHOE AR-EXTENDABLE STICK, 240-8694, 240-8696, 240-8698 BACKHOE AR-STANDARD STICK**
**AN ATTACHMENT**

**SMCS-5057** **i01963966**

| NOTE | REF NO | GRAPHIC REF | PART NUMBER | QTY | PART NAME 1 2 3 4 5 6 (PRODUCT LEVEL) | SEE PAGE |
|---|---|---|---|---|---|---|
| I | 1 | 1 | **176-8127** | 1 | HOSE AS | |
| C | 2 | 1 | **228-6331** | 1 | HOSE AS | |
| C | 3 | 1 | *9X-3965* | 1 | TEE | |
| | 4 | 1 | *148-8458* | 1 | UNION GP | |
| | | 1 | **6V-8397** | 2 | SEAL-O-RING | |
| | | 1 | **6V-9807** | 1 | UNION | |
| | 5 | 1 | **6V-8397** | 1 | SEAL-O-RING | |
| | 6 | 1 | **6V-9168** | 1 | NUT (11/16-16 THD) | |
| C | 7 | 1 | **5D-1026** | 3 | CLAMP-HOSE | |

C-CHANGE FROM PREVIOUS TYPE
I-REFER TO HYDRAULIC INFORMATION SYSTEM

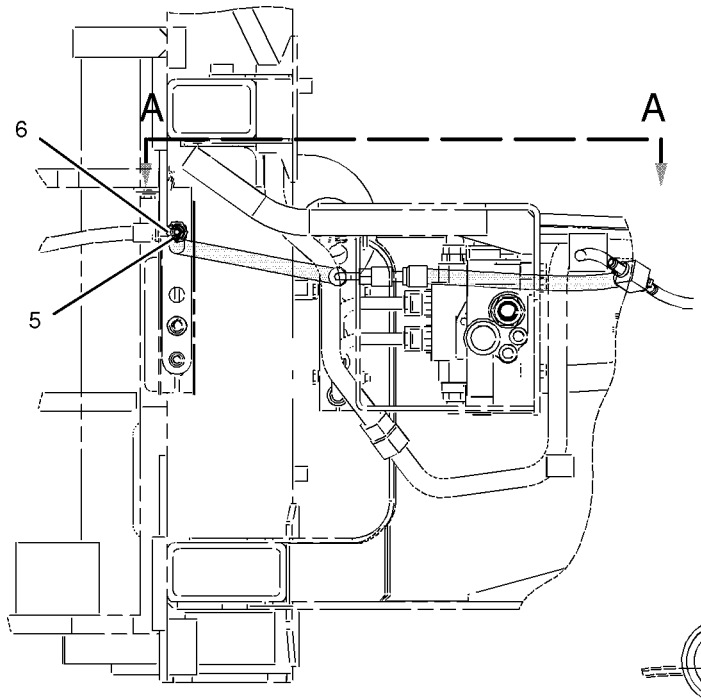


RIGHT SIDE VIEW

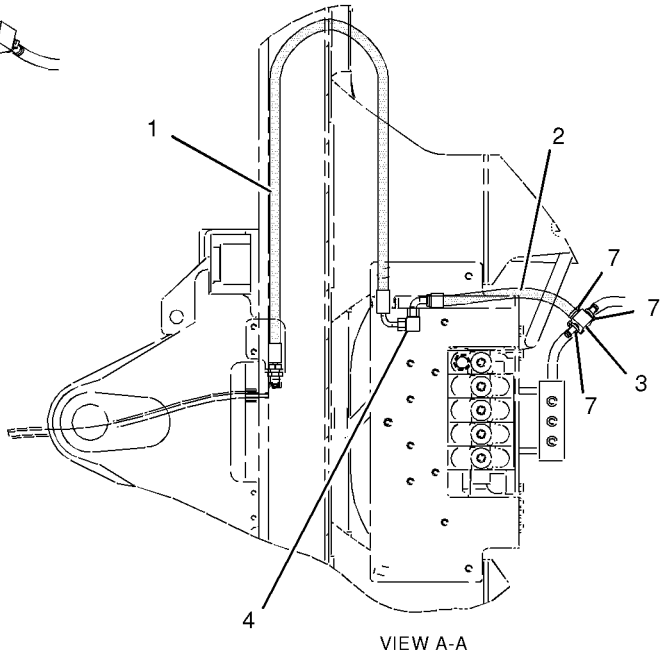


VIEW A-A

GRAPHIC #1 **<END>** g01025624

# *186-1594* LINES GP-DRAIN—BOOM, STICK LOCKS

**S/N: BXC1-UP; DSX1-UP**

**PART OF 240-8491, 240-8493, 240-8506, 240-8690, 240-8692 BACKHOE AR-EXTENDABLE STICK, 240-8684, 240-8686, 240-8688 BACKHOE AR-STANDARD STICK AN ATTACHMENT**

**SMCS-5057** **i01854786**

| NOTE | REF NO | GRAPHIC REF | PART NUMBER | QTY | PART NAME 1 2 3 4 5 6 (PRODUCT LEVEL) | SEE PAGE |
|---|---|---|---|---|---|---|
| | 1 | 1 | **5D-1026** | 3 | CLAMP-HOSE | |
| | 2 | 1 | **9X-3965** | 1 | TEE | |
| I | 3 | 1 | **176-8123** | 1 | HOSE AS | |
| | 4 | 1 | **228-6331** | 1 | HOSE AS | |
| | 5 | 1 | *148-8458* | 1 | UNION GP | |
| | | 1 | **6V-8397** | 2 | SEAL-O-RING | |
| | | 1 | **6V-9807** | 1 | UNION | |
| | 6 | 1 | **6V-8397** | 1 | SEAL-O-RING | |
| | 7 | 1 | **6V-9168** | 1 | NUT (11/16-16 THD) | |

I-SEE HOSE FABRICATION GUIDE

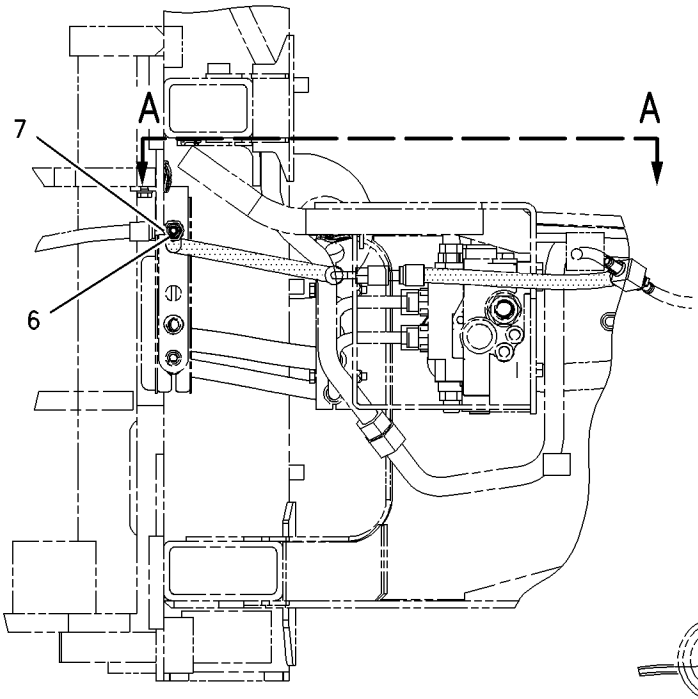


RIGHT SIDE VIEW

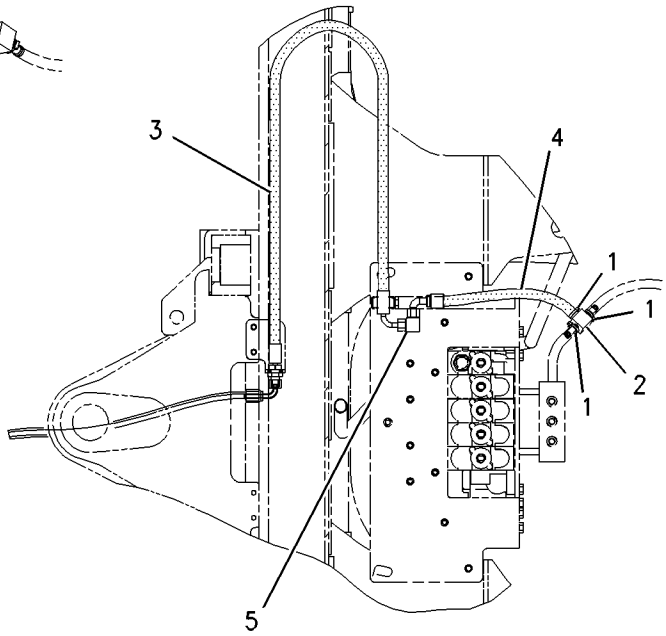


VIEW A-A

GRAPHIC #1 **<END>** g00949552

# HYDRAULIC SYSTEM

## *162-2351* LINES GP-EXTENDABLE STICK

**S/N: BXC1-UP; DSX1-UP**
**PART OF 155-6586 CYLINDER GP-EXTENDABLE STICK**
**AN ATTACHMENT**

**SMCS-5057** **i01887699**

| NOTE | REF NO | GRAPHIC REF | PART NUMBER | QTY | PART NAME 1 2 3 4 5 6 (PRODUCT LEVEL) | SEE PAGE |
|---|---|---|---|---|---|---|
| | 1 | 1 | **5P-0598** | 1 | CLAMP | |
| | 2 | 1 | **9R-2004** | 1 | BLOCK | |
| | 3 | 1 | **162-2353** | 1 | TUBE AS | |
| | 4 | 1 | **203-9048** | 1 | TUBE AS | |
| | 5 | 1 | *148-8390* | 1 | ELBOW GP | |
| | | 1 | **2M-9780** | 1 | SEAL-O-RING | |
| | | 1 | **6V-8626** | 1 | ELBOW | |
| | | 1 | **7J-9108** | 1 | SEAL-O-RING | |

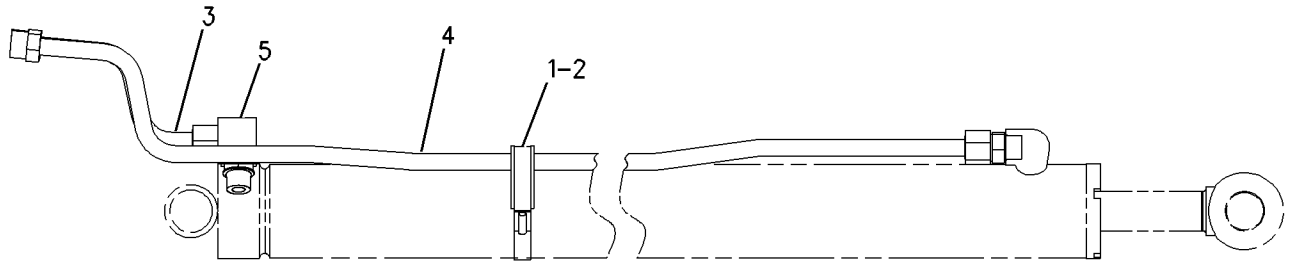


GRAPHIC #1 **<END>** g00865371

# HYDRAULIC SYSTEM

## *163-9371* LINES GP-LIFT CYLINDER

**S/N: BXC1-UP; DSX1-UP**
**PART OF 186-5335, 186-5337 HYDRAULIC AR**
**AN ATTACHMENT**

**SMCS-5057, 5102** **i01981949**

| NOTE | REF NO | GRAPHIC REF | PART NUMBER | QTY | PART NAME 1 2 3 4 5 6 (PRODUCT LEVEL) | SEE PAGE |
|---|---|---|---|---|---|---|
| | 1 | 1 | **7K-1181** | 1 | STRAP-CABLE | |
| C | 2 | 1 | **112-5823** | 1 | TUBE AS | |
| C | 3 | 1 | **112-5827** | 1 | TUBE AS | |
| I | 4 | 1 | **120-1324** | 4 | HOSE AS | |
| | 5 | 1 | **122-4872** | 1 | BRACKET AS | |
| | 6 | 1 | **122-4873** | 1 | BRACKET AS | |
| C | 7 | 1 | **158-3412** | 6 | CLIP (SLOT) | |
| C | 8 | 1 | **230-7649** | 1 | TUBE AS | |
| C | 9 | 1 | **230-7651** | 1 | TUBE AS | |
| | 10 | 1 | *148-8341* | 1 | CONNECTOR GP | |
| | | 1 | **3D-2824** | 1 | SEAL-O-RING | |
| | | 1 | **6V-8713** | 1 | CONNECTOR | |
| | | 1 | **7J-9108** | 1 | SEAL-O-RING | |
| | 11 | 1 | *148-8446* | 3 | TEE GP-SWIVEL | |
| | | | | | (EACH INCLUDES) | |
| | | 1 | **6V-9838** | 1 | TEE-SWIVEL | |
| | | 1 | **7J-9108** | 2 | SEAL-O-RING | |
| | 12 | 1 | *150-3063* | 1 | TEE AS | |
| | | 1 | **3D-2824** | 1 | SEAL-O-RING | |
| | | 1 | **7J-9108** | 2 | SEAL-O-RING | |
| | | 1 | **120-9809** | 1 | TEE | |
| | 13 | 1 | **151-4841** | 1 | BLOCK | |
| C | 14 | 1 | **230-7650** | 1 | TUBE AS | |
| | 15 | 1 | **6V-8398** | 4 | SEAL-O-RING | |
| | 16 | 1 | **6V-9831** | 2 | CAP AS | |
| C | 17 | 1 | **7J-9108** | 1 | SEAL-O-RING | |
| C | 18 | 1 | **8T-4121** | 5 | WASHER-HARD (11X21X2.5MM THK) | |
| CM | 19 | 1 | **8T-4133** | 1 | NUT (M10X1.5 THD) | |
| M | 20 | 1 | **8T-4136** | 4 | BOLT (M10X1.5X25MM) | |
| CM | 21 | 1 | **8T-4137** | 1 | BOLT (M10X1.5X20MM) | |
| C | 22 | 1 | **9R-7803** | 3 | CLIP (TAB) | |

C-CHANGE FROM PREVIOUS TYPE
I-REFER TO HYDRAULIC INFORMATION SYSTEM
M-METRIC PART

*163-9371* **LINES GP-LIFT CYLINDER** *(contd.)* **i01981949**

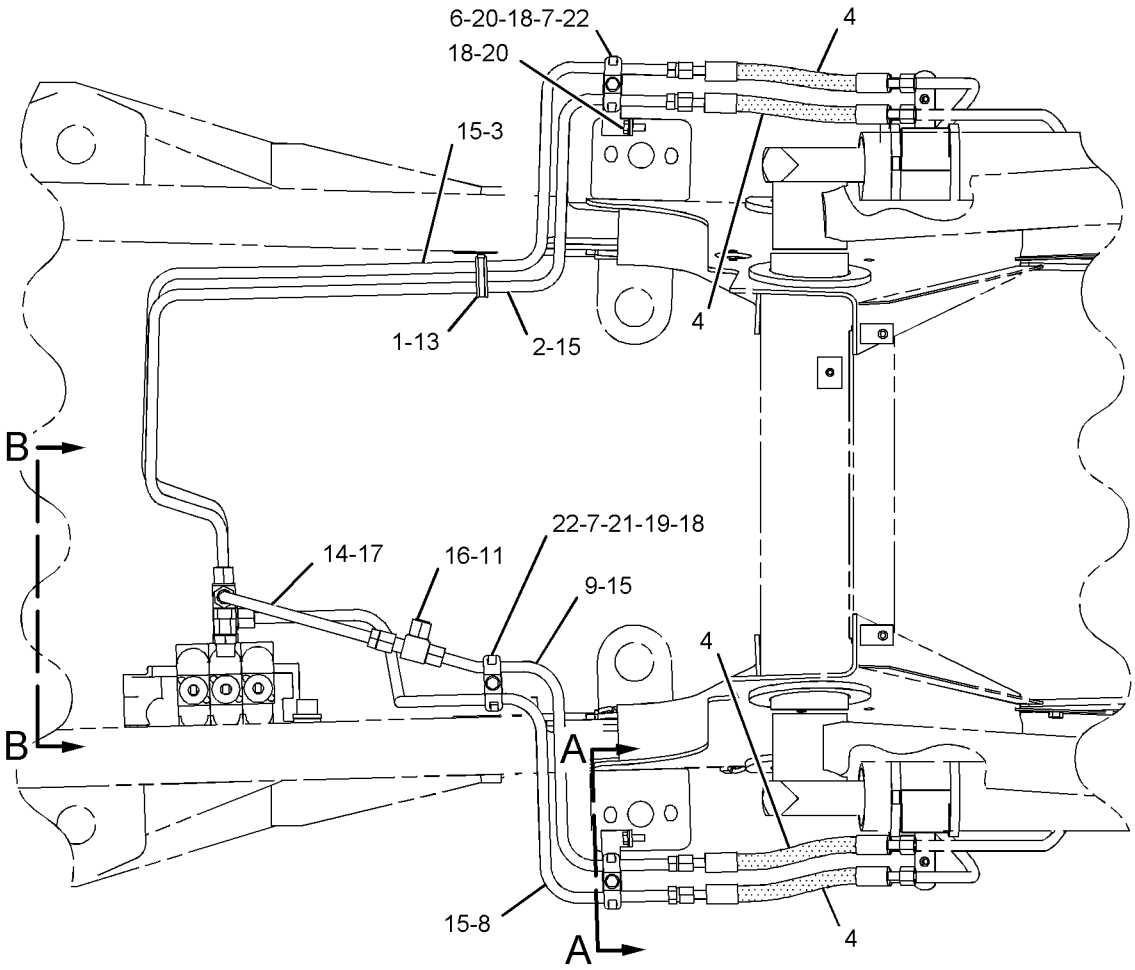


TOP VIEW

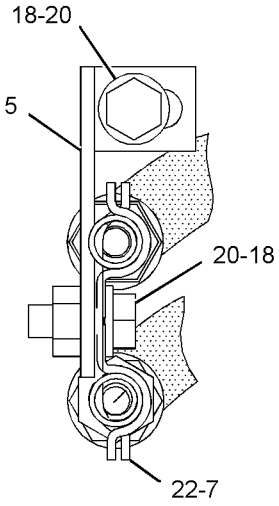


VIEW A-A

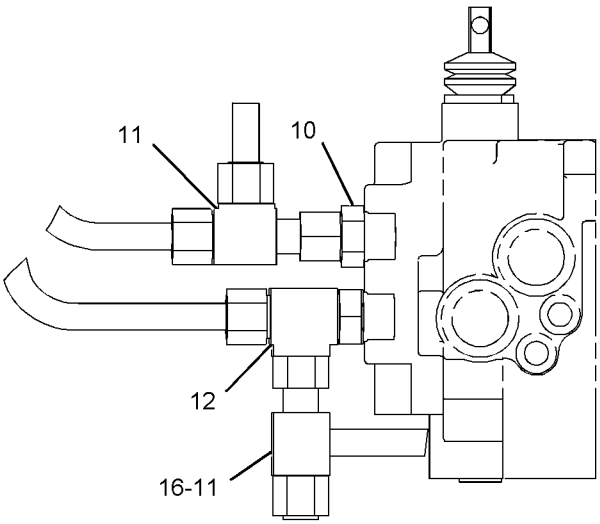


VIEW B-B

GRAPHIC #1 **<END>** g01028616

# HYDRAULIC SYSTEM

## *189-8797* LINES GP-LIFT CYLINDER

**S/N: BXC1-UP; DSX1-UP**
**PART OF 185-0060, 185-0062 HYDRAULIC AR**
**AN ATTACHMENT**

**SMCS-5057, 5102** **i01956949**

| NOTE | REF NO | GRAPHIC REF | PART NUMBER | QTY | PART NAME 1 2 3 4 5 6 (PRODUCT LEVEL) | SEE PAGE |
|---|---|---|---|---|---|---|
| C | 1 | 1 | **7K-1181** | 1 | STRAP-CABLE | |
| | 2 | 1 | **8T-6726** | 4 | CLAMP-HOSE | |
| C | 3 | 1 | **112-5823** | 1 | TUBE AS | |
| C | 4 | 1 | **112-5827** | 1 | TUBE AS | |
| | 5 | 1 | **112-5844** | 1 | TUBE AS | |
| | 6 | 1 | **112-5847** | 1 | TUBE AS | |
| I | 7 | 1 | **118-9039** | 4 | HOSE AS | |
| | 8 | 1 | **122-4872** | 1 | BRACKET AS | |
| | 9 | 1 | **122-4873** | 1 | BRACKET AS | |
| | 10 | 1 | **143-0777** | 1 | PLATE AS | |
| | 11 | 1 | **143-0779** | 1 | PLATE AS | |
| C | 12 | 1 | **158-3412** | 10 | CLIP (SLOT) | |
| | 13 | 1 | **198-7336** | 1 | TUBE AS | |
| | 14 | 1 | **198-7337** | 1 | TUBE AS | |
| C | 15 | 1 | **230-7649** | 1 | TUBE AS | |
| C | 16 | 1 | **230-7651** | 1 | TUBE AS | |
| | 17 | 1 | *148-8341* | 1 | CONNECTOR GP | |
| | | 1 | **3D-2824** | 1 | SEAL-O-RING | |
| | | 1 | **6V-8713** | 1 | CONNECTOR | |
| | | 1 | **7J-9108** | 1 | SEAL-O-RING | |
| | 18 | 1 | *148-8390* | 2 | ELBOW GP | |
| | | | | | (EACH INCLUDES) | |
| | | 1 | **2M-9780** | 1 | SEAL-O-RING | |
| | | 1 | **6V-8626** | 1 | ELBOW | |
| | | 1 | **7J-9108** | 1 | SEAL-O-RING | |
| | 19 | 1 | *148-8446* | 3 | TEE GP-SWIVEL | |
| | | | | | (EACH INCLUDES) | |
| | | 1 | **6V-9838** | 1 | TEE-SWIVEL | |
| | | 1 | **7J-9108** | 2 | SEAL-O-RING | |
| | 20 | 1 | *150-3063* | 1 | TEE AS | |
| | | 1 | **3D-2824** | 1 | SEAL-O-RING | |
| | | 1 | **7J-9108** | 2 | SEAL-O-RING | |
| | | 1 | **120-9809** | 1 | TEE | |
| | 21 | 1 | **151-4841** | 1 | BLOCK | |
| C | 22 | 1 | **230-7650** | 1 | TUBE AS | |
| | 23 | 1 | **6V-8398** | 8 | SEAL-O-RING | |
| | 24 | 1 | **6V-9831** | 2 | CAP AS | |
| C | 25 | 1 | **7J-9108** | 1 | SEAL-O-RING | |
| C | 26 | 1 | **8T-4121** | 7 | WASHER-HARD (11X21X2.5MM THK) | |
| CM | 27 | 1 | **8T-4133** | 1 | NUT (M10X1.5 THD) | |
| M | 28 | 1 | **8T-4136** | 6 | BOLT (M10X1.5X25MM) | |
| CM | 29 | 1 | **8T-4137** | 1 | BOLT (M10X1.5X20MM) | |
| C | 30 | 1 | **9R-7803** | 5 | CLIP (TAB) | |

C-CHANGE FROM PREVIOUS TYPE
I-REFER TO HYDRAULIC INFORMATION SYSTEM
M-METRIC PART

*189-8797* **LINES GP-LIFT CYLINDER** *(contd.)* **i01956949**

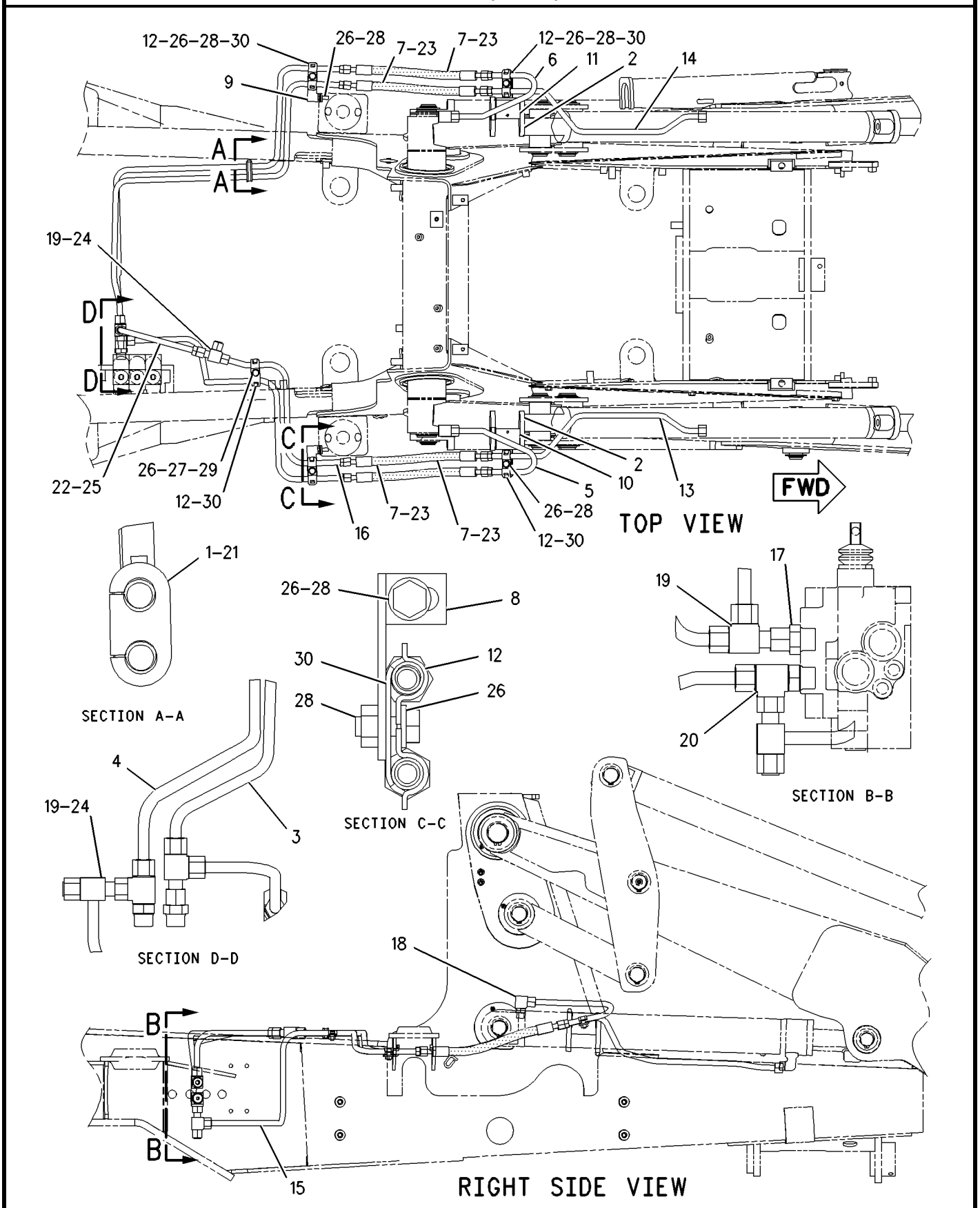


GRAPHIC #1 **<END>** g00996071

# HYDRAULIC SYSTEM

## *200-4153* LINES GP-LIFT CYLINDER

**S/N: BXC1-UP; DSX1-UP**
**PART OF 186-5335, 186-5337 HYDRAULIC AR**
**AN ATTACHMENT**

**SMCS-5057, 5102** **i01621817**

| NOTE | REF NO | GRAPHIC REF | PART NUMBER | QTY | PART NAME 1 2 3 4 5 6 (PRODUCT LEVEL) | SEE PAGE |
|---|---|---|---|---|---|---|
| | 1 | 1 | **8T-6726** | 4 | CLAMP-HOSE | |
| | 2 | 1 | **9R-7070** | 1 | PLATE AS | |
| | 3 | 1 | **9R-7071** | 1 | PLATE AS | |
| | 4 | 1 | **120-8413** | 1 | TUBE AS | |
| | 5 | 1 | **120-8414** | 1 | TUBE AS | |
| | 6 | 1 | **158-3412** | 4 | CLIP (SLOT) | |
| | 7 | 1 | **198-8352** | 1 | TUBE AS | |
| | 8 | 1 | **198-8353** | 1 | TUBE AS | |
| | 9 | 1 | *148-8390* | 2 | ELBOW GP | |
| | | | | | (EACH INCLUDES) | |
| | | 1 | **2M-9780** | 1 | SEAL-O-RING | |
| | | 1 | **6V-8626** | 1 | ELBOW | |
| | | 1 | **7J-9108** | 1 | SEAL-O-RING | |
| | 10 | 1 | **6V-8398** | 4 | SEAL-O-RING | |
| | 11 | 1 | **8T-4121** | 2 | WASHER-HARD (11X21X2.5MM THK) | |
| M | 12 | 1 | **8T-4136** | 2 | BOLT (M10X1.5X25MM) | |
| | 13 | 1 | **9R-7803** | 2 | CLIP | |

M-METRIC PART

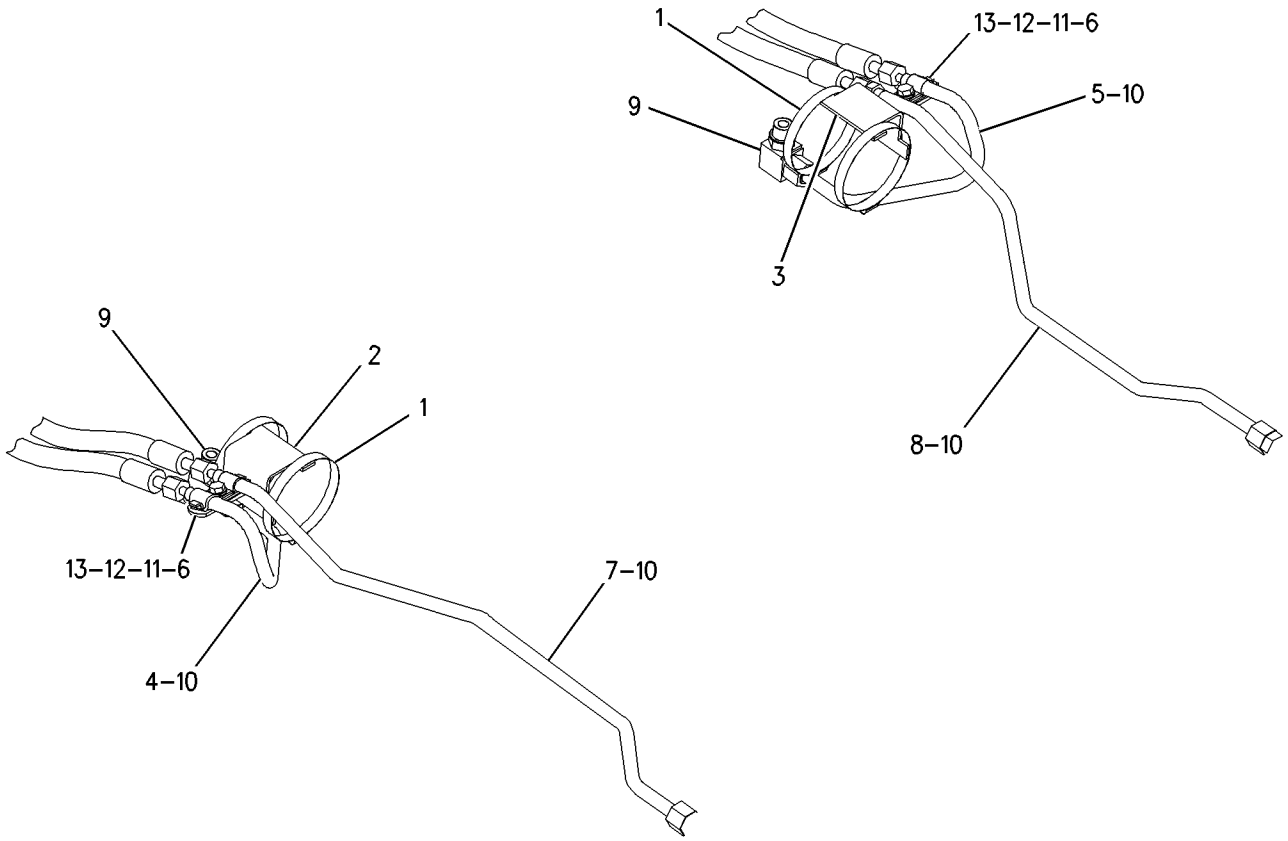


GRAPHIC #1 **<END>** g00839159

## *183-8549* LINES GP-LOAD CONTROL VALVE—BOOM AND STICK

**S/N: BXC1-UP; DSX1-UP**

**PART OF 240-8491, 240-8493, 240-8506, 240-8507, 240-8690, 240-8692, 240-8700, 240-8702 BACKHOE AR-EXTENDABLE STICK, 240-8684, 240-8686, 240-8688, 240-8694, 240-8696, 240-8698 BACKHOE AR-STANDARD STICK**

**AN ATTACHMENT**

**SMCS-5057, 5811** **i01984305**

| NOTE | REF NO | GRAPHIC REF | PART NUMBER | QTY | PART NAME 1 2 3 4 5 6 (PRODUCT LEVEL) | SEE PAGE |
|---|---|---|---|---|---|---|
| | 1 | 1 | **5P-0599** | 6 | CLAMP | |
| | 2 | 1 | **7X-3164** | 1 | ADAPTER-SWIVEL | |
| | 3 | 1 | **7X-3166** | 1 | ADAPTER-SWIVEL | |
| CI | 4 | 1 | **236-7661** | 1 | HOSE AS | |
| | 5 | 1 | **9R-4619** | 1 | SUPPORT AS | |
| I | 6 | 1 | **9R-9285** | 1 | HOSE AS | |
| | 7 | 1 | **160-8282** | 1 | BRACKET | |
| I | 8 | 1 | **160-8283** | 1 | HOSE AS | |
| | 9 | 1 | **160-9777** | 1 | BRACKET | |
| CI | 10 | 1 | **236-7528** | 1 | HOSE AS | |
| I | 11 | 1 | **165-6982** | 1 | HOSE AS | |
| C | 12 | 1 | **9R-5948** | 1 | BLOCK | |
| | 13 | 1 | **175-6918** | 1 | VALVE GP-LOAD CONTROL | |
| | 14 | 1 | **175-6919** | 1 | VALVE GP-LOAD CONTROL | |
| I | 15 | 1 | **176-8121** | 1 | HOSE AS | |
| I | 16 | 1 | **176-8122** | 1 | HOSE AS | |
| I | 17 | 1 | **199-8927** | 1 | HOSE AS | |
| | 18 | 1 | **207-8598** | 1 | TUBE AS | |
| | 19 | 1 | *148-8322* | 1 | CONNECTOR GP | |
| | | 1 | **2M-9780** | 1 | SEAL-O-RING | |
| | | 1 | **6V-8640** | 1 | CONNECTOR | |
| | | 1 | **6V-9746** | 1 | SEAL-O-RING | |
| | 20 | 1 | *148-8325* | 1 | CONNECTOR GP | |
| | | 1 | **3J-1907** | 1 | SEAL-O-RING | |
| | | 1 | **4J-5477** | 1 | SEAL-O-RING | |
| | | 1 | **6V-8641** | 1 | CONNECTOR | |
| | 21 | 1 | *148-8336* | 1 | CONNECTOR AS | |
| | | 1 | **3J-1907** | 1 | SEAL-O-RING | |
| | | 1 | **6V-8397** | 1 | SEAL-O-RING | |
| | | 1 | **6V-8636** | 1 | CONNECTOR | |
| | 22 | 1 | *148-8341* | 1 | CONNECTOR GP | |
| | | 1 | **3D-2824** | 1 | SEAL-O-RING | |
| | | 1 | **6V-8713** | 1 | CONNECTOR | |
| | | 1 | **7J-9108** | 1 | SEAL-O-RING | |
| | 23 | 1 | *148-8345* | 1 | CONNECTOR GP | |
| | | 1 | **2M-9780** | 1 | SEAL-O-RING | |
| | | 1 | **6V-8398** | 1 | SEAL-O-RING | |
| | | 1 | **6V-8638** | 1 | CONNECTOR | |
| C | 24 | 1 | *171-6725* | 1 | ELBOW AS | |
| | | 1 | **3D-2824** | 1 | SEAL-O-RING | |
| C | | 1 | **8T-6451** | 1 | ELBOW | |
| | | 1 | **6V-9746** | 1 | SEAL-O-RING | |
| | 25 | 1 | *148-8368* | 1 | ELBOW GP | |
| | | 1 | **3J-1907** | 1 | SEAL-O-RING | |
| | | 1 | **4J-5477** | 1 | SEAL-O-RING | |
| | | 1 | **6V-8627** | 1 | ELBOW | |
| | 26 | 1 | *148-8417* | 1 | REDUCER AS | |
| | | 1 | **6V-8397** | 1 | SEAL-O-RING | |
| | | 1 | **6V-8941** | 1 | REDUCER | |
| | 27 | 1 | *148-8435* | 1 | TEE AS | |
| | | 1 | **3J-1907** | 1 | SEAL-O-RING | |
| | | 1 | **6V-8397** | 2 | SEAL-O-RING | |
| | | 1 | **6V-8781** | 1 | TEE-FACE SEAL | |

## *183-8549* LINES GP-LOAD CONTROL VALVE *(contd.)*

i01984305

| NOTE | REF NO | GRAPHIC REF | PART NUMBER | QTY | PART NAME 1 2 3 4 5 6 (PRODUCT LEVEL) | SEE PAGE |
|---|---|---|---|---|---|---|
| | 28 | 1 | *148-8446* | 1 | TEE GP-SWIVEL | |
| | | 1 | **6V-9838** | 1 | TEE-SWIVEL | |
| | | 1 | **7J-9108** | 2 | SEAL-O-RING | |
| | 29 | 1 | *148-8449* | 1 | TEE GP-SWIVEL | |
| | | 1 | **6V-9746** | 2 | SEAL-O-RING | |
| | | 1 | **6V-9839** | 1 | TEE-SWIVEL | |
| | 30 | 1 | *164-5561* | 1 | ADAPTER AS | |
| | | 1 | **2M-9780** | 1 | SEAL-O-RING | |
| | | 1 | **5P-1042** | 1 | ADAPTER-O-RING | |
| C | 31 | 1 | **233-2138** | 1 | VALVE GP-RESTRICTOR | |
| | 32 | 1 | **3D-2824** | 1 | SEAL-O-RING | |
| | 33 | 1 | **3K-0360** | 1 | SEAL-O-RING | |
| C | 34 | 1 | *148-8327* | 2 | CONNECTOR AS | |
| | | | | | (EACH INCLUDES) | |
| C | | 1 | **3D-2824** | 1 | SEAL-O-RING | |
| C | | 1 | **6V-8637** | 1 | CONNECTOR | |
| C | | 1 | **6V-9746** | 1 | SEAL-O-RING | |
| C | 35 | 1 | *161-9916* | 1 | ADAPTER GP | |
| C | | 1 | **2M-9780** | 1 | SEAL-O-RING | |
| C | | 1 | **6V-7420** | 1 | ADAPTER | |
| M | 36 | 1 | **6V-7744** | 1 | LOCKNUT (M10X1.5 THD) | |
| | 37 | 1 | **6V-8555** | 1 | NUT-FACE SEAL (1-14THD) | |
| | 38 | 1 | **6V-8556** | 1 | NUT (1 3/16-12 THD) | |
| C | 39 | 1 | *215-3191* | 1 | REDUCER AS | |
| C | | 1 | **4J-5477** | 1 | SEAL-O-RING | |
| C | | 1 | **6V-8937** | 1 | REDUCER-O-RING | |
| | 40 | 1 | **7J-9108** | 1 | SEAL-O-RING | |
| | 41 | 1 | **8M-2773** | 3 | CLIP | |
| | 42 | 1 | **8T-1887** | 1 | CLIP (SLOT) | |
| | 43 | 1 | **8T-1888** | 1 | CLIP (TAB) | |
| | 44 | 1 | **8T-4121** | 4 | WASHER-HARD (11X21X2.5MM THK) | |
| M | 45 | 1 | **8T-4137** | 1 | BOLT (M10X1.5X20MM) | |
| | 46 | 1 | **8T-4224** | 3 | WASHER-HARD (8.8X16X2MM THK) | |
| M | 47 | 1 | **8T-6466** | 1 | BOLT (M10X1.50X60MM) | |
| M | 48 | 1 | **8T-7329** | 1 | BOLT (M8X1.25X55MM) | |
| M | 49 | 1 | **8T-7963** | 1 | LOCKNUT (M8X1.25 THD) | |
| | | | | | | |
| BF | | | **3S-2093** | 25 | STRAP-CABLE | |

B-USE AS REQUIRED
C-CHANGE FROM PREVIOUS TYPE
F-NOT SHOWN
I-REFER TO HYDRAULIC INFORMATION SYSTEM
M-METRIC PART

*183-8549* **LINES GP-LOAD CONTROL VALVE** *(contd.)* **i01984305**

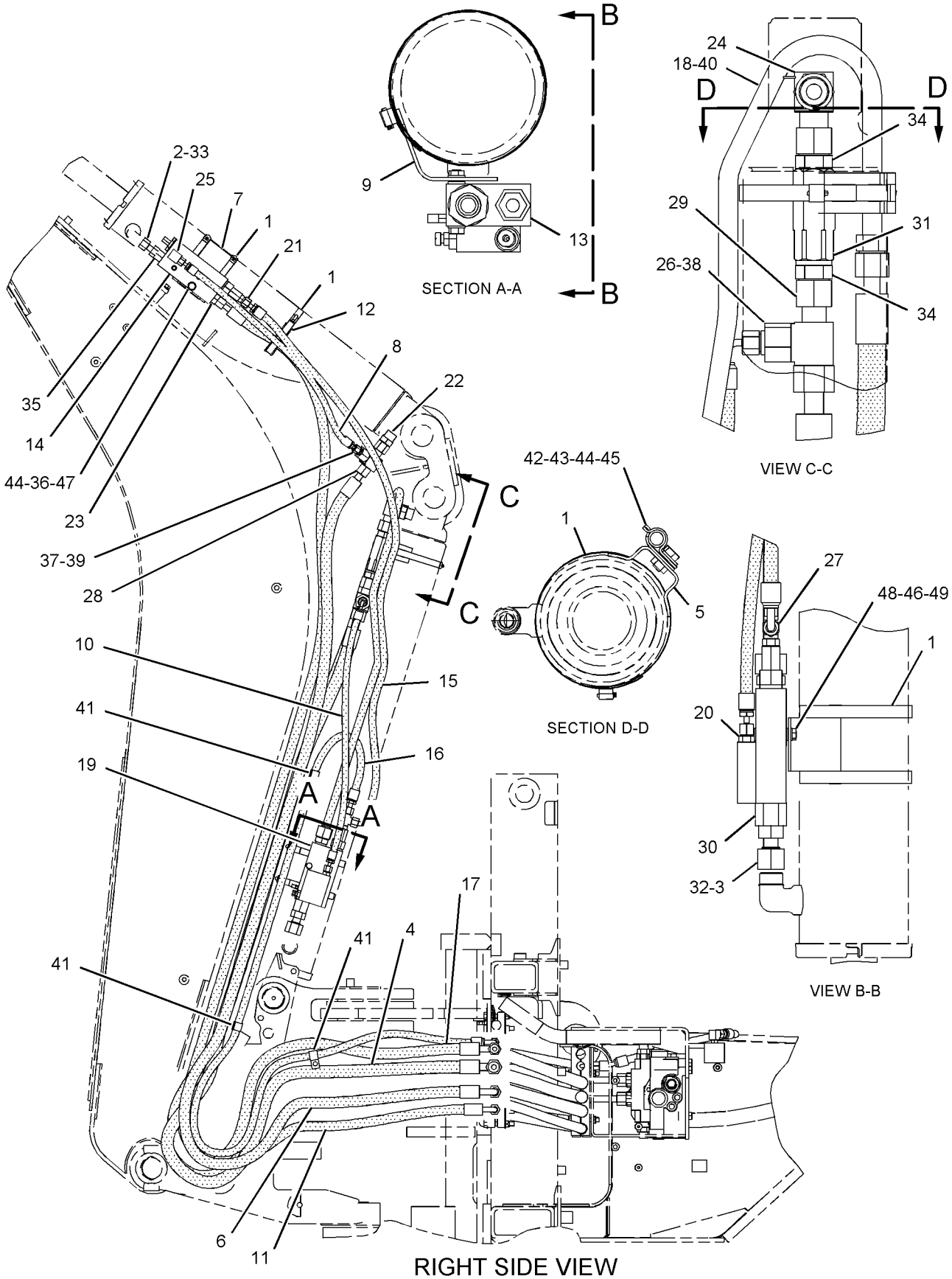


GRAPHIC #1 **<END>** g01031953

# HYDRAULIC SYSTEM

## *183-8552* LINES GP-LOAD CONTROL VALVE—PARALLEL LIFT

**S/N: BXC1-UP; DSX1-UP**
**PART OF 185-0061, 185-0063 HYDRAULIC AR**
**AN ATTACHMENT**

**SMCS-5057, 5811** **i01956954**

| NOTE | REF NO | GRAPHIC REF | PART NUMBER | QTY | PART NAME 1 2 3 4 5 6 (PRODUCT LEVEL) | SEE PAGE |
|---|---|---|---|---|---|---|
| C | 1 | 1 | **7K-1181** | 3 | STRAP-CABLE | |
| | 2 | 2 | **7X-3164** | 2 | ADAPTER-SWIVEL | |
| | 3 | 1,2 | **8T-6726** | 8 | CLAMP-HOSE | |
| I | 4 | 1 | **8X-5561** | 2 | HOSE AS | |
| | 5 | 2 | **9M-6738** | 4 | CLAMP-HOSE | |
| | 6 | 1 | **9R-5948** | 4 | BLOCK | |
| C | 7 | 1 | **112-5823** | 1 | TUBE AS | |
| C | 8 | 1 | **112-5827** | 1 | TUBE AS | |
| | 9 | 1 | **112-5830** | 1 | TUBE AS | |
| | 10 | 1 | **112-5833** | 1 | TUBE AS | |
| I | 11 | 1 | **118-9039** | 4 | HOSE AS | |
| | 12 | 1 | **122-4870** | 1 | BRACKET AS | |
| | 13 | 1 | **122-4871** | 1 | BRACKET AS | |
| | 14 | 2 | **122-4872** | 1 | BRACKET AS | |
| | 15 | 1 | **122-4873** | 1 | BRACKET AS | |
| | 16 | 2 | **156-9370** | 1 | BRACKET AS | |
| | 17 | 2 | **156-9371** | 1 | BRACKET AS | |
| C | 18 | 1,2 | **158-3412** | 18 | CLIP (SLOT) | |
| I | 19 | 2 | **161-3981** | 2 | HOSE AS | |
| | 20 | 1 | **161-4057** | 1 | TUBE AS | |
| | 21 | 1 | **161-4059** | 1 | TUBE AS | |
| I | 22 | 1 | **161-6209** | 2 | HOSE AS | |
| | 23 | 2 | **175-6916** | 2 | VALVE GP-LOAD CONTROL | |
| | 24 | 1 | **175-6917** | 2 | VALVE GP-LOAD CONTROL | |
| | 25 | 1 | **179-7135** | 1 | BRACKET (RH) | |
| | 26 | 1 | **179-7136** | 1 | BRACKET (LH) | |
| I | 27 | 1 | **180-4194** | 1 | HOSE AS | |
| | 28 | 1 | **187-4331** | 1 | TUBE AS | |
| | 29 | 1 | **187-4332** | 1 | TUBE AS | |
| | 30 | 1 | **207-8596** | 1 | TUBE AS | |
| | 31 | 1 | **207-8597** | 1 | TUBE AS | |
| | 32 | 1 | **215-4016** | 1 | PLATE AS | |
| M | | 1 | **8T-3490** | 2 | NUT-WELD | |
| | 33 | 1 | **216-0582** | 1 | PLATE AS | |
| M | | 1 | **8T-3490** | 2 | NUT-WELD | |
| I | 34 | 1 | **216-7660** | 2 | HOSE AS | |
| C | 35 | 1 | **230-7649** | 1 | TUBE AS | |
| C | 36 | 1 | **230-7651** | 1 | TUBE AS | |
| | 37 | 2 | *148-8315* | 4 | CONNECTOR GP | |
| | | | | | (EACH INCLUDES) | |
| | | 2 | **2M-9780** | 1 | SEAL-O-RING | |
| | | 2 | **6V-8642** | 1 | CONNECTOR | |
| | | 2 | **7J-9108** | 1 | SEAL-O-RING | |
| | 38 | 1,2 | *148-8341* | 3 | CONNECTOR GP | |
| | | | | | (EACH INCLUDES) | |
| | | 1,2 | **3D-2824** | 1 | SEAL-O-RING | |
| | | 1,2 | **6V-8713** | 1 | CONNECTOR | |
| | | 1,2 | **7J-9108** | 1 | SEAL-O-RING | |
| | 39 | 2 | *148-8345* | 2 | CONNECTOR GP | |
| | | | | | (EACH INCLUDES) | |
| | | 2 | **2M-9780** | 1 | SEAL-O-RING | |
| | | 2 | **6V-8398** | 1 | SEAL-O-RING | |
| | | 2 | **6V-8638** | 1 | CONNECTOR | |
| | 40 | 2 | *148-8368* | 4 | ELBOW GP | |
| | | | | | (EACH INCLUDES) | |

## *183-8552* LINES GP-LOAD CONTROL VALVE *(contd.)* i01956954

| NOTE | REF NO | GRAPHIC REF | PART NUMBER | QTY | PART NAME 1 2 3 4 5 6 (PRODUCT LEVEL) | SEE PAGE |
|---|---|---|---|---|---|---|
| | | 2 | **3J-1907** | 1 | SEAL-O-RING | |
| | | 2 | **4J-5477** | 1 | SEAL-O-RING | |
| | | 2 | **6V-8627** | 1 | ELBOW | |
| | 41 | 1 | *148-8426* | 2 | TEE GP | |
| | | | | | (EACH INCLUDES) | |
| | | 1 | **3K-0360** | 1 | SEAL-O-RING | |
| | | 1 | **6V-8397** | 1 | SEAL-O-RING | |
| | | 1 | **6V-8398** | 1 | SEAL-O-RING | |
| | | 1 | **8T-6696** | 1 | TEE-O-RING | |
| | 42 | 1,2 | *148-8446* | 7 | TEE GP-SWIVEL | |
| | | | | | (EACH INCLUDES) | |
| | | 1,2 | **6V-9838** | 1 | TEE-SWIVEL | |
| | | 1,2 | **7J-9108** | 2 | SEAL-O-RING | |
| | 43 | 2 | *150-3063* | 1 | TEE AS | |
| | | 2 | **3D-2824** | 1 | SEAL-O-RING | |
| | | 2 | **7J-9108** | 2 | SEAL-O-RING | |
| | | 2 | **120-9809** | 1 | TEE | |
| C | 44 | 1 | **151-4841** | 3 | BLOCK | |
| | 45 | 2 | *156-3691* | 2 | ADAPTER AS | |
| | | | | | (EACH INCLUDES) | |
| | | 2 | **3J-1907** | 1 | SEAL-O-RING | |
| | | 2 | **4J-5477** | 1 | SEAL-O-RING | |
| | | 2 | **081-6352** | 1 | ADAPTER | |
| C | 46 | 1 | **230-7650** | 1 | TUBE AS | |
| | 47 | 2 | **2M-9780** | 4 | SEAL-O-RING | |
| | 48 | 2 | **3K-0360** | 2 | SEAL-O-RING | |
| | 49 | 1 | **6V-7420** | 2 | ADAPTER | |
| | 50 | 1,2 | **6V-8397** | 2 | SEAL-O-RING | |
| | 51 | 1 | **6V-8398** | 12 | SEAL-O-RING | |
| | 52 | 2 | **6V-8555** | 2 | NUT-FACE SEAL (1-14THD) | |
| | 53 | 2 | **6V-8938** | 2 | REDUCER-O-RING | |
| | 54 | 1 | **6V-9831** | 2 | CAP AS | |
| C | 55 | 1 | **7J-9108** | 1 | SEAL-O-RING | |
| | 56 | 2 | **8T-3001** | 2 | ELBOW | |
| C | 57 | 1,2 | **8T-4121** | 17 | WASHER-HARD (11X21X2.5MM THK) | |
| CM | 58 | 1 | **8T-4133** | 1 | NUT (M10X1.5 THD) | |
| M | 59 | 1,2 | **8T-4136** | 10 | BOLT (M10X1.5X25MM) | |
| CM | 60 | 1 | **8T-4137** | 1 | BOLT (M10X1.5X20MM) | |
| M | 61 | 1 | **8T-4195** | 2 | BOLT (M10X1.5X30MM) | |
| M | 62 | 1 | **8T-4196** | 4 | BOLT (M10X1.5X35MM) | |
| M | 63 | 2 | **8T-6912** | 8 | BOLT (M8X1.25X50MM) | |
| M | 64 | 2 | **8T-7963** | 8 | LOCKNUT | |
| C | 65 | 1,2 | **9R-7803** | 9 | CLIP (TAB) | |
| | | | | | | |
| BF | | | **3S-2093** | 40 | STRAP-CABLE | |

B-USE AS REQUIRED
C-CHANGE FROM PREVIOUS TYPE
F-NOT SHOWN
I-REFER TO HYDRAULIC INFORMATION SYSTEM
M-METRIC PART

*183-8552* **LINES GP-LOAD CONTROL VALVE** *(contd.)* **i01956954**

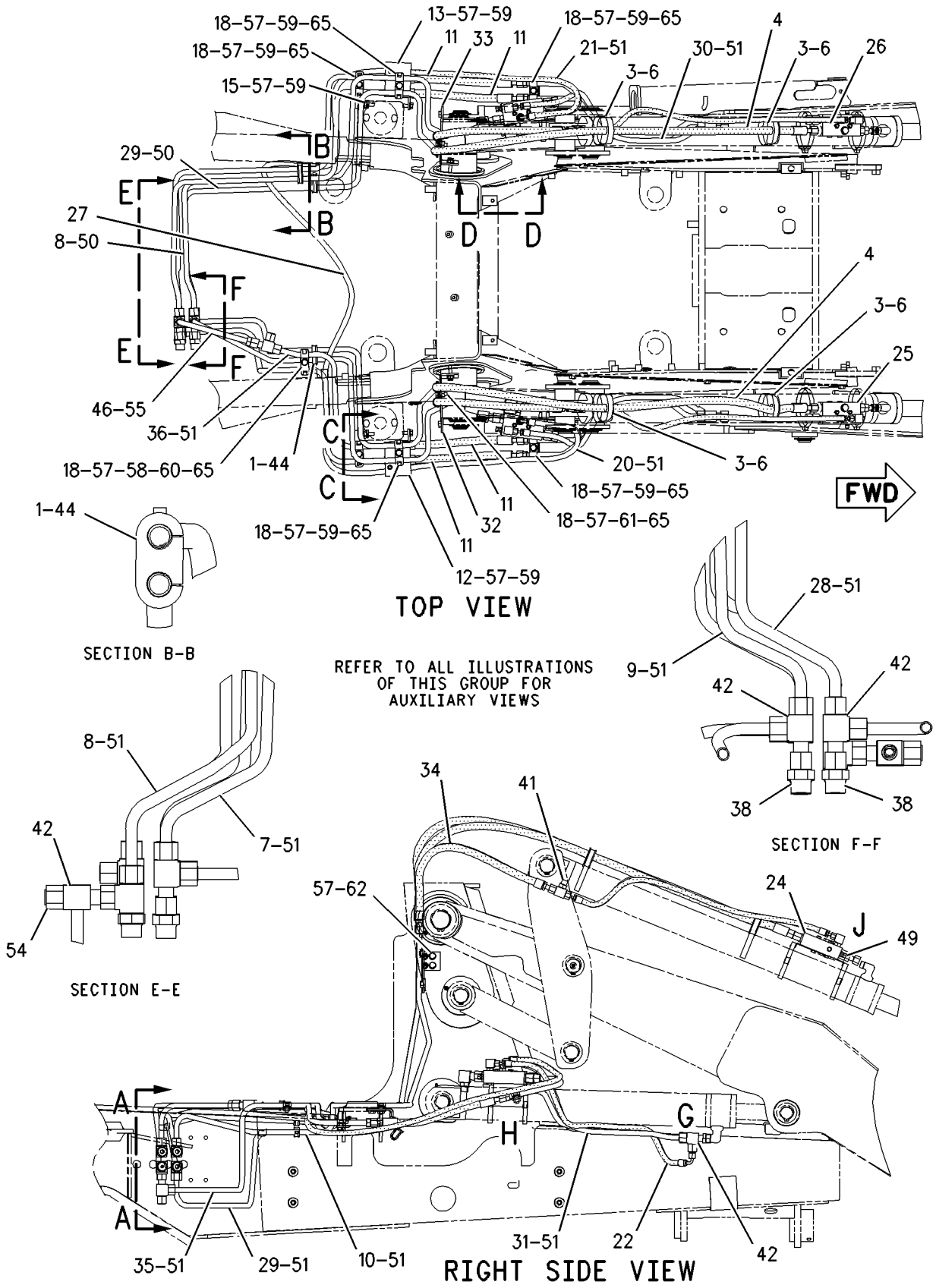


GRAPHIC #1 g00996452

*183-8552* **LINES GP-LOAD CONTROL VALVE** *(contd.)* **i01956954**

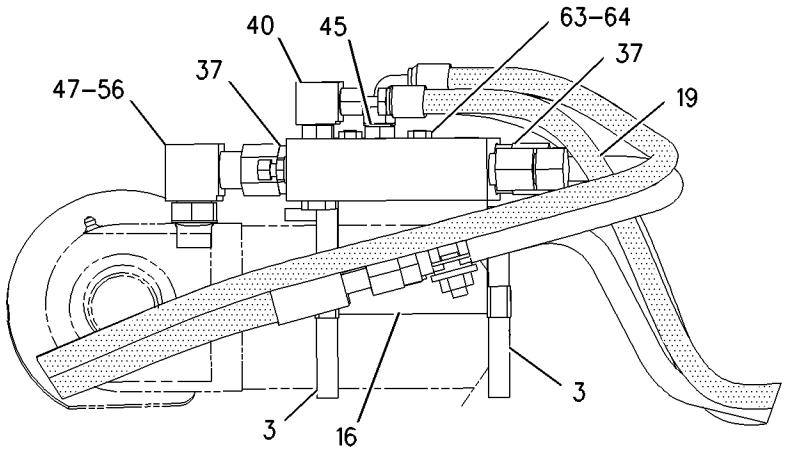


VIEW OF AREA H

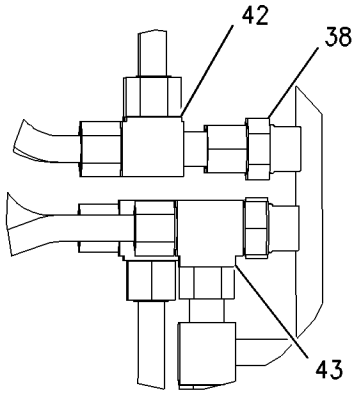


SECTION A-A

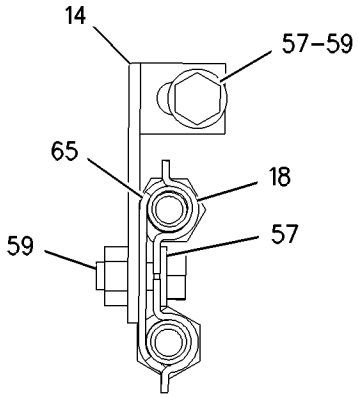


SECTION C-C

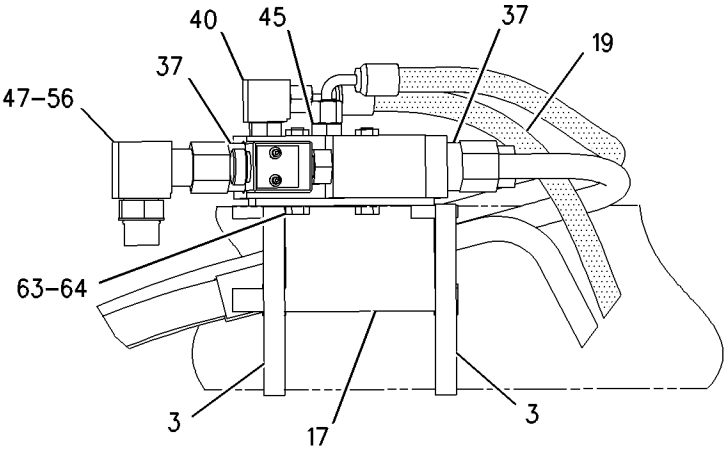


SECTION D-D

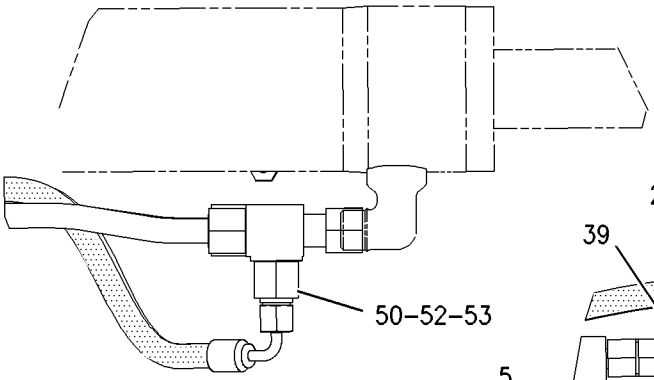


VIEW OF AREA G

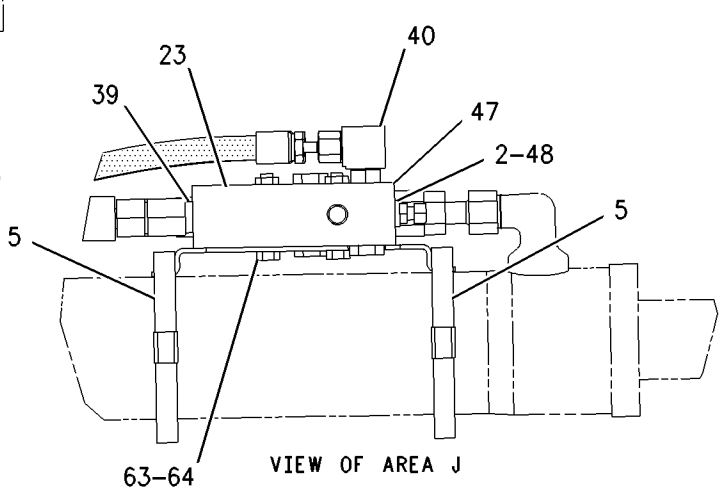


VIEW OF AREA J

GRAPHIC #2 **<END>** g00996453

# HYDRAULIC SYSTEM

## *183-8559* LINES GP-LOAD CONTROL VALVE—LIFT, TILT

**S/N: BXC1-UP; DSX1-UP**
**PART OF 186-5336, 186-5338 HYDRAULIC AR**
**AN ATTACHMENT**

**SMCS-5057, 5811** **i02010016**

| NOTE | REF NO | GRAPHIC REF | PART NUMBER | QTY | PART NAME 1 2 3 4 5 6 (PRODUCT LEVEL) | SEE PAGE |
|---|---|---|---|---|---|---|
| | 1 | 2 | **5P-0599** | 1 | CLAMP | |
| C | 2 | 1 | **7K-1181** | 2 | STRAP-CABLE | |
| | 3 | 2 | **8T-6726** | 4 | CLAMP-HOSE | |
| I | 4 | 1 | **8W-4002** | 2 | HOSE AS | |
| I | 5 | 1 | **9R-7069** | 4 | HOSE AS | |
| I | 6 | 1 | **9R-9198** | 2 | HOSE AS | |
| | 7 | 1 | **9R-9316** | 1 | BRACKET AS | |
| | 8 | 2 | **9R-9375** | 1 | PLATE | |
| Y | 9 | 1 | **9T-5455** | 1 | VALVE GP-LOAD CONTROL (TILT) | 579 |
| C | 10 | 2 | **112-5823** | 1 | TUBE AS | |
| C | 11 | 2 | **112-5827** | 1 | TUBE AS | |
| | 12 | 1 | **122-4872** | 1 | BRACKET AS | |
| | 13 | 1 | **122-4873** | 1 | BRACKET AS | |
| | 14 | 1 | **122-5822** | 1 | BRACKET AS | |
| | 15 | 2 | **156-3837** | 2 | CLIP (SLOT) | |
| | 16 | 2 | **156-3838** | 1 | CLIP (TAB) | |
| C | 17 | 1,2 | **158-3412** | 18 | CLIP (SLOT) | |
| | 18 | 1,2 | **159-0738** | 1 | BRACKET AS | |
| | 19 | 2 | **159-0739** | 1 | BRACKET AS | |
| | 20 | 2 | **159-0783** | 1 | TUBE AS | |
| | 21 | 2 | **159-0784** | 1 | TUBE AS | |
| | 22 | 2 | **159-0974** | 1 | TUBE AS | |
| | 23 | 2 | **159-0975** | 1 | TUBE AS | |
| I | 24 | 2 | **161-3981** | 2 | HOSE AS | |
| | 25 | 2 | **175-6916** | 2 | VALVE GP-LOAD CONTROL (LIFT) | |
| I | 26 | 1 | **180-4194** | 1 | HOSE AS | |
| | 27 | 1 | **187-3162** | 1 | TUBE AS | |
| | 28 | 1 | **187-3163** | 1 | TUBE AS | |
| | 29 | 1 | **187-3164** | 1 | TUBE AS | |
| | 30 | 1 | **187-3166** | 1 | TUBE AS | |
| | 31 | 1 | **192-8775** | 1 | TUBE AS | |
| | 32 | 1 | **207-8593** | 1 | TUBE AS | |
| | 33 | 1 | **207-8594** | 1 | TUBE AS | |
| | 34 | 1 | **207-8595** | 1 | TUBE AS | |
| C | 35 | 1 | **230-7649** | 1 | TUBE AS | |
| C | 36 | 1 | **230-7651** | 1 | TUBE AS | |
| | 37 | 2 | *148-8315* | 4 | CONNECTOR GP | |
| | | | | | (EACH INCLUDES) | |
| | | 2 | **2M-9780** | 1 | SEAL-O-RING | |
| | | 2 | **6V-8642** | 1 | CONNECTOR | |
| | | 2 | **7J-9108** | 1 | SEAL-O-RING | |
| | 38 | 1 | *148-8340* | 2 | CONNECTOR GP | |
| | | | | | (EACH INCLUDES) | |
| | | 1 | **3K-0360** | 1 | SEAL-O-RING | |
| | | 1 | **6V-8398** | 1 | SEAL-O-RING | |
| | | 1 | **6V-8639** | 1 | CONNECTOR | |
| | 39 | 1,2 | *148-8341* | 3 | CONNECTOR GP | |
| | | | | | (EACH INCLUDES) | |
| | | 1,2 | **3D-2824** | 1 | SEAL-O-RING | |
| | | 1,2 | **6V-8713** | 1 | CONNECTOR | |
| | | 1,2 | **7J-9108** | 1 | SEAL-O-RING | |
| | 40 | 1 | *148-8342* | 1 | CONNECTOR GP | |
| | | 1 | **3K-0360** | 1 | SEAL-O-RING | |
| | | 1 | **6V-8632** | 1 | CONNECTOR | |
| | | 1 | **7J-9108** | 1 | SEAL-O-RING | |

## *183-8559* LINES GP-LOAD CONTROL VALVE *(contd.)* i02010016

| NOTE | REF NO | GRAPHIC REF | PART NUMBER | QTY | PART NAME 1 2 3 4 5 6 (PRODUCT LEVEL) | SEE PAGE |
|---|---|---|---|---|---|---|
| | 41 | 2 | *148-8368* | 2 | ELBOW GP | |
| | | | | | (EACH INCLUDES) | |
| | | 2 | **3J-1907** | 1 | SEAL-O-RING | |
| | | 2 | **4J-5477** | 1 | SEAL-O-RING | |
| | | 2 | **6V-8627** | 1 | ELBOW | |
| | 42 | 1,2 | *148-8390* | 3 | ELBOW GP | |
| | | | | | (EACH INCLUDES) | |
| | | 1,2 | **2M-9780** | 1 | SEAL-O-RING | |
| | | 1,2 | **6V-8626** | 1 | ELBOW | |
| | | 1,2 | **7J-9108** | 1 | SEAL-O-RING | |
| | 43 | 1 | *148-8393* | 2 | ELBOW GP | |
| | | | | | (EACH INCLUDES) | |
| | | 1 | **6V-9852** | 1 | ELBOW (SWIVEL) | |
| | | 1 | **7J-9108** | 1 | SEAL-O-RING | |
| | 44 | 1,2 | *148-8446* | 5 | TEE GP-SWIVEL | |
| | | | | | (EACH INCLUDES) | |
| | | 1,2 | **6V-9838** | 1 | TEE-SWIVEL | |
| | | 1,2 | **7J-9108** | 2 | SEAL-O-RING | |
| | 45 | 1 | *150-3037* | 1 | ELBOW GP | |
| | | 1 | **3K-0360** | 1 | SEAL-O-RING | |
| | | 1 | **7J-9108** | 1 | SEAL-O-RING | |
| | | 1 | **8T-2530** | 1 | ELBOW | |
| | 46 | 2 | *150-3063* | 1 | TEE AS | |
| | | 2 | **3D-2824** | 1 | SEAL-O-RING | |
| | | 2 | **7J-9108** | 2 | SEAL-O-RING | |
| | | 2 | **120-9809** | 1 | TEE | |
| | 47 | 1 | **151-4841** | 2 | BLOCK | |
| | 48 | 2 | *156-3691* | 2 | ADAPTER AS | |
| | | | | | (EACH INCLUDES) | |
| | | 2 | **3J-1907** | 1 | SEAL-O-RING | |
| | | 2 | **4J-5477** | 1 | SEAL-O-RING | |
| | | 2 | **081-6352** | 1 | ADAPTER | |
| C | 49 | 1 | **230-7650** | 1 | TUBE AS | |
| M | 50 | 2 | **3T-0850** | 2 | SCREW | |
| | 51 | 1 | **6V-8397** | 2 | SEAL-O-RING | |
| | 52 | 1,2 | **6V-8398** | 14 | SEAL-O-RING | |
| | 53 | 1 | **6V-8555** | 2 | NUT-FACE SEAL (1-14THD) | |
| | 54 | 1 | **6V-8938** | 2 | REDUCER-O-RING | |
| | 55 | 1,2 | **6V-9831** | 2 | CAP AS | |
| C | 56 | 1 | **7J-9108** | 1 | SEAL-O-RING | |
| | 57 | 1 | **8T-1891** | 2 | CLIP (SLOT) | |
| | 58 | 1 | **8T-1892** | 2 | CLIP (TAB) | |
| C | 59 | 1,2 | **8T-4121** | 16 | WASHER-HARD (11X21X2.5MM THK) | |
| CM | 60 | 1 | **8T-4133** | 1 | NUT (M10X1.5 THD) | |
| M | 61 | 1,2 | **8T-4136** | 10 | BOLT (M10X1.5X25MM) | |
| CM | 62 | 1 | **8T-4137** | 2 | BOLT (M10X1.5X20MM) | |
| M | 63 | 1,2 | **8T-4195** | 4 | BOLT (M10X1.5X30MM) | |
| M | 64 | 2 | **8T-6912** | 4 | BOLT (M8X1.25X50MM) | |
| M | 65 | 2 | **8T-7963** | 4 | LOCKNUT (M8X1.25 THD) | |
| C | 66 | 1,2 | **9R-7803** | 9 | CLIP (TAB) | |
| BF | | | **3S-2093** | 45 | STRAP-CABLE | |

B-USE AS REQUIRED
C-CHANGE FROM PREVIOUS TYPE
F-NOT SHOWN
I-REFER TO HYDRAULIC INFORMATION SYSTEM
M-METRIC PART
Y-SEPARATE ILLUSTRATION

*183-8559* **LINES GP-LOAD CONTROL VALVE** *(contd.)* **i02010016**

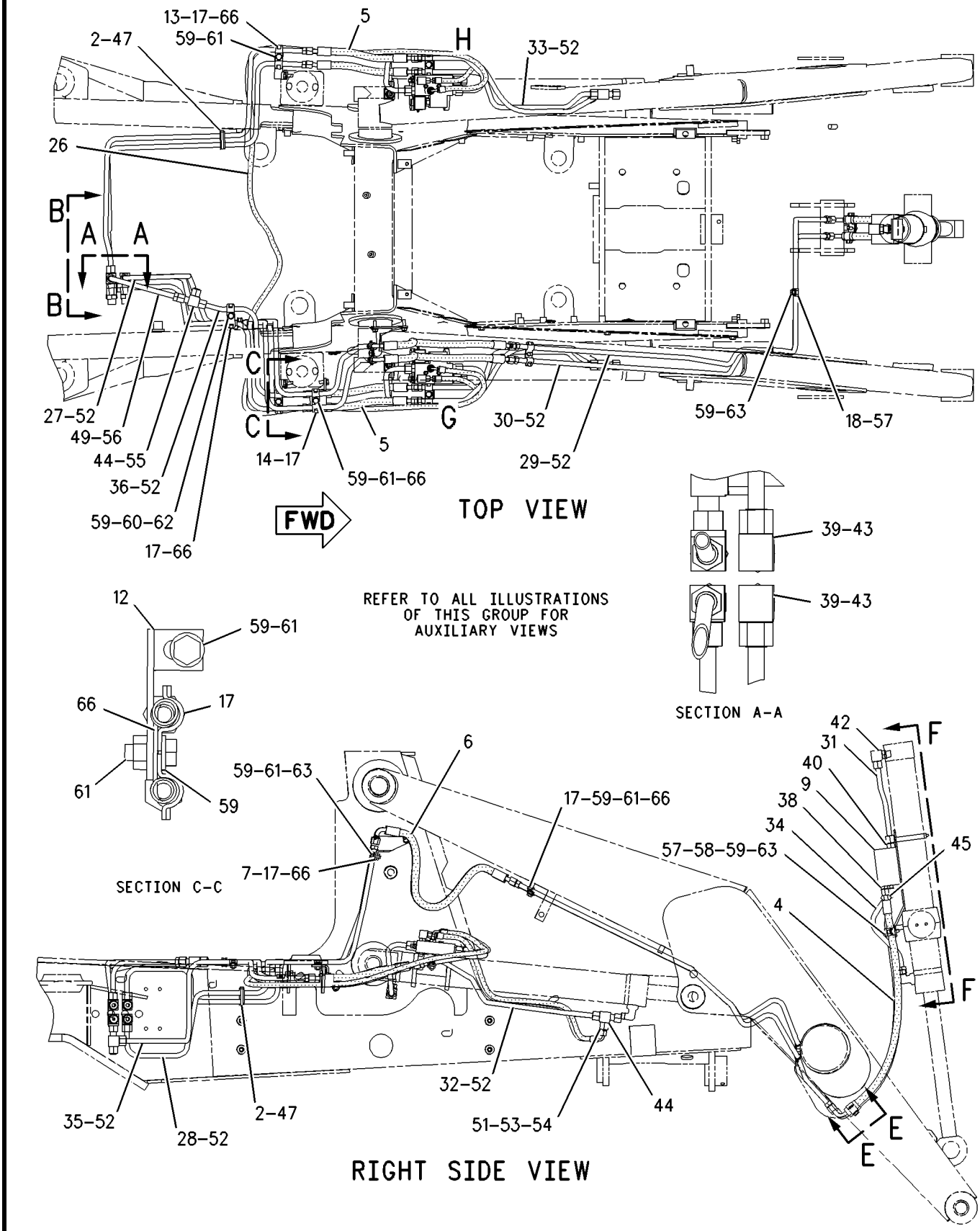


GRAPHIC #1 g00996259

*183-8559* **LINES GP-LOAD CONTROL VALVE** *(contd.)* **i02010016**

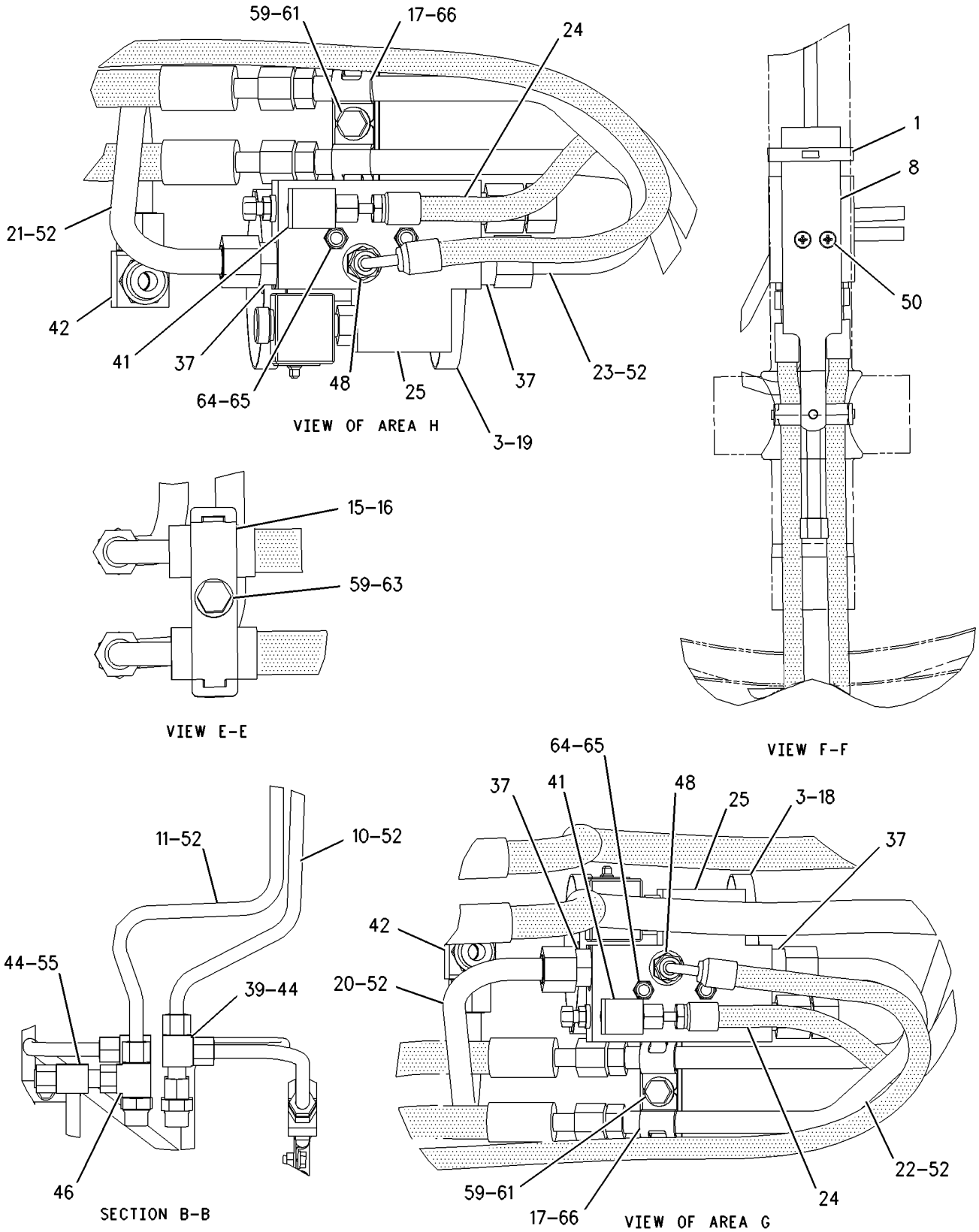


GRAPHIC #2 **<END>** g00996261

# HYDRAULIC SYSTEM

## *106-5876* LINES GP-LOADER AUXILIARY

**S/N: BXC1-UP; DSX1-UP**
**ONE CIRCUIT, SCISSORS**
**PART OF 186-5337, 186-5338 HYDRAULIC AR**
**AN ATTACHMENT**

**SMCS-5057** **i01984656**

| NOTE | REF NO | GRAPHIC REF | PART NUMBER | QTY | PART NAME 1 2 3 4 5 6 (PRODUCT LEVEL) | SEE PAGE |
|---|---|---|---|---|---|---|
| | 1 | 1 | **6V-9830** | 2 | CAP AS | |
| I | 2 | 1 | **9R-9198** | 2 | HOSE AS | |
| | 3 | 1 | **9R-9319** | 1 | BRACKET AS | |
| M | | 1 | **8T-3490** | 1 | NUT-WELD (M10X1.5 THD) | |
| | 4 | 1 | **116-4616** | 1 | TUBE AS | |
| | 5 | 1 | **116-4617** | 1 | TUBE AS | |
| | 6 | 1 | **122-5823** | 1 | BRACKET AS | |
| M | | 1 | **8T-3490** | 1 | NUT-WELD (M10X1.5 THD) | |
| | 7 | 1 | **151-4841** | 1 | BLOCK | |
| | 8 | 1 | **133-7332** | 1 | TUBE AS | |
| | 9 | 1 | **133-7333** | 1 | TUBE AS | |
| | 10 | 1 | **9R-7803** | 4 | CLIP (TAB) | |
| | 11 | 1 | **6V-8398** | 6 | SEAL-O-RING | |
| | 12 | 1 | *148-8341* | 2 | CONNECTOR GP | |
| | | | | | (EACH INCLUDES) | |
| | | 1 | **3D-2824** | 1 | SEAL-O-RING | |
| | | 1 | **6V-8713** | 1 | CONNECTOR | |
| | | 1 | **7J-9108** | 1 | SEAL-O-RING | |
| M | 13 | 1 | **8T-4137** | 1 | BOLT (M10X1.5X20MM) | |
| | 14 | 1 | **8T-4121** | 8 | WASHER-HARD (11X21X2.5MM THK) | |
| | 15 | 1 | **7K-1181** | 1 | STRAP-CABLE | |
| M | 16 | 1 | **8T-4136** | 3 | BOLT (M10X1.5X25MM) | |
| M | 17 | 1 | **8T-4195** | 3 | BOLT (M10X1.5X30MM) | |
| | 18 | 1 | **158-3412** | 8 | CLIP (SLOT) | |

I-REFER TO HYDRAULIC INFORMATION SYSTEM
M-METRIC PART

*106-5876* **LINES GP-LOADER AUXILIARY** *(contd.)* **i01984656**

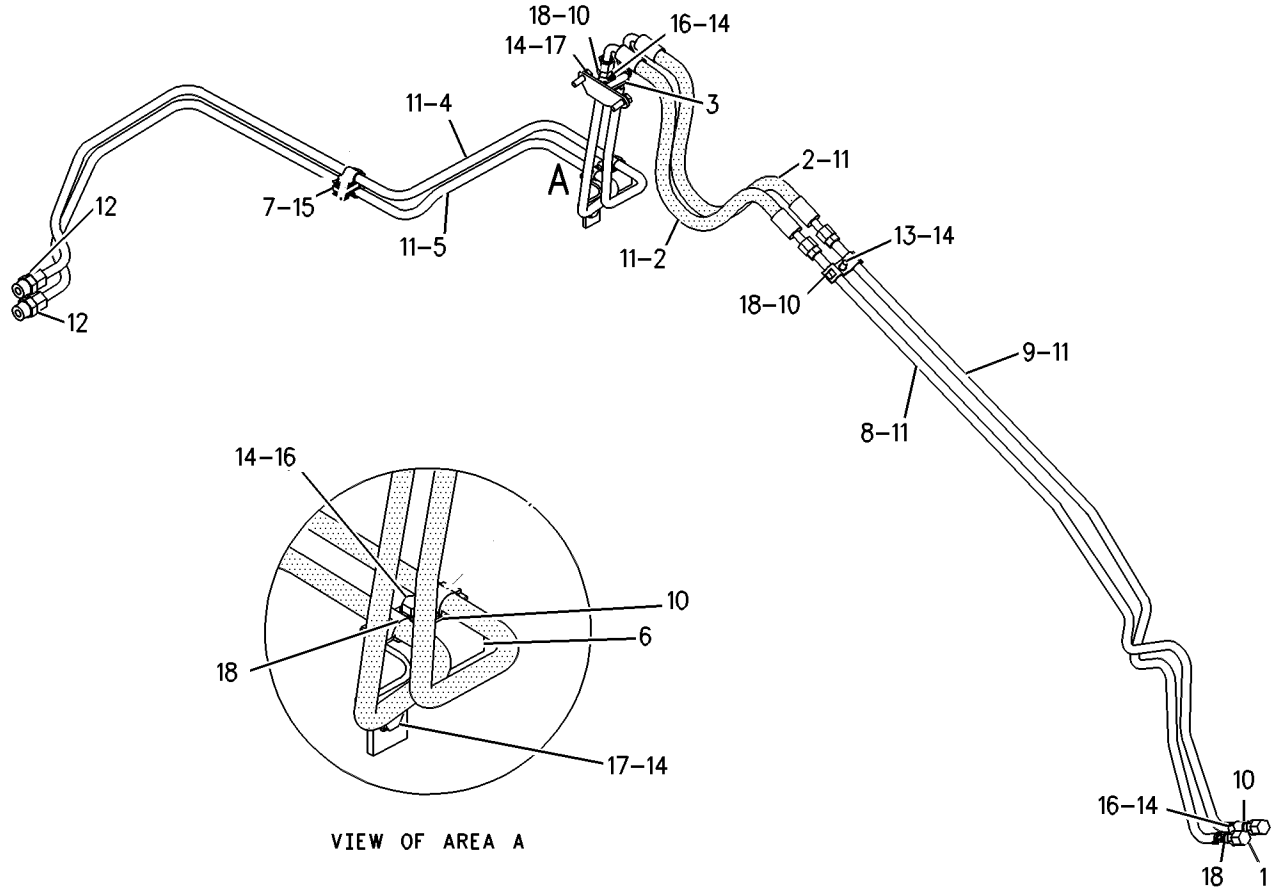


GRAPHIC #1 **<END>** g00889518

# HYDRAULIC SYSTEM

## *112-6403* LINES GP-LOADER AUXILIARY

**S/N: BXC1-UP; DSX1-UP**
**PART OF 185-0062, 185-0063 HYDRAULIC AR**
**AN ATTACHMENT**

**SMCS-5057** **i01763903**

| NOTE | REF NO | GRAPHIC REF | PART NUMBER | QTY | PART NAME 1 2 3 4 5 6 (PRODUCT LEVEL) | SEE PAGE |
|---|---|---|---|---|---|---|
| | 1 | 1 | **6V-9830** | 2 | CAP AS | |
| | 2 | 1 | **7K-1181** | 2 | STRAP-CABLE | |
| | 3 | 1 | **112-5841** | 1 | TUBE AS | |
| | 4 | 1 | **112-5842** | 1 | TUBE AS | |
| I | 5 | 1 | **180-2531** | 2 | HOSE AS | |
| | 6 | 1 | **215-1383** | 1 | TUBE AS | |
| | 7 | 1 | **215-1384** | 1 | TUBE AS | |
| | 8 | 1 | *148-8341* | 1 | CONNECTOR GP | |
| | | 1 | **3D-2824** | 1 | SEAL-O-RING | |
| | | 1 | **6V-8713** | 1 | CONNECTOR | |
| | | 1 | **7J-9108** | 1 | SEAL-O-RING | |
| | 9 | 1 | *148-8382* | 1 | ELBOW GP | |
| | | 1 | **3D-2824** | 1 | SEAL-O-RING | |
| | | 1 | **7J-9108** | 1 | SEAL-O-RING | |
| | | 1 | **8T-0404** | 1 | ELBOW | |
| | 10 | 1 | **151-4841** | 2 | BLOCK | |
| | 11 | 1 | **6V-8398** | 6 | SEAL-O-RING | |
| | 12 | 1 | **8T-4121** | 10 | WASHER-HARD (11X21X2.5MM THK) | |
| M | 13 | 1 | **8T-4136** | 8 | BOLT (M10X1.5X25MM) | |
| M | 14 | 1 | **8T-4137** | 2 | BOLT (M10X1.5X20MM) | |
| | 15 | 1 | **9R-1004** | 10 | CLIP (TAB) | |
| | 16 | 1 | **9R-1005** | 10 | CLIP (SLOT) | |

I-SEE HOSE FABRICATION GUIDE
M-METRIC PART

*112-6403* **LINES GP-LOADER AUXILIARY** *(contd.)* **i01763903**

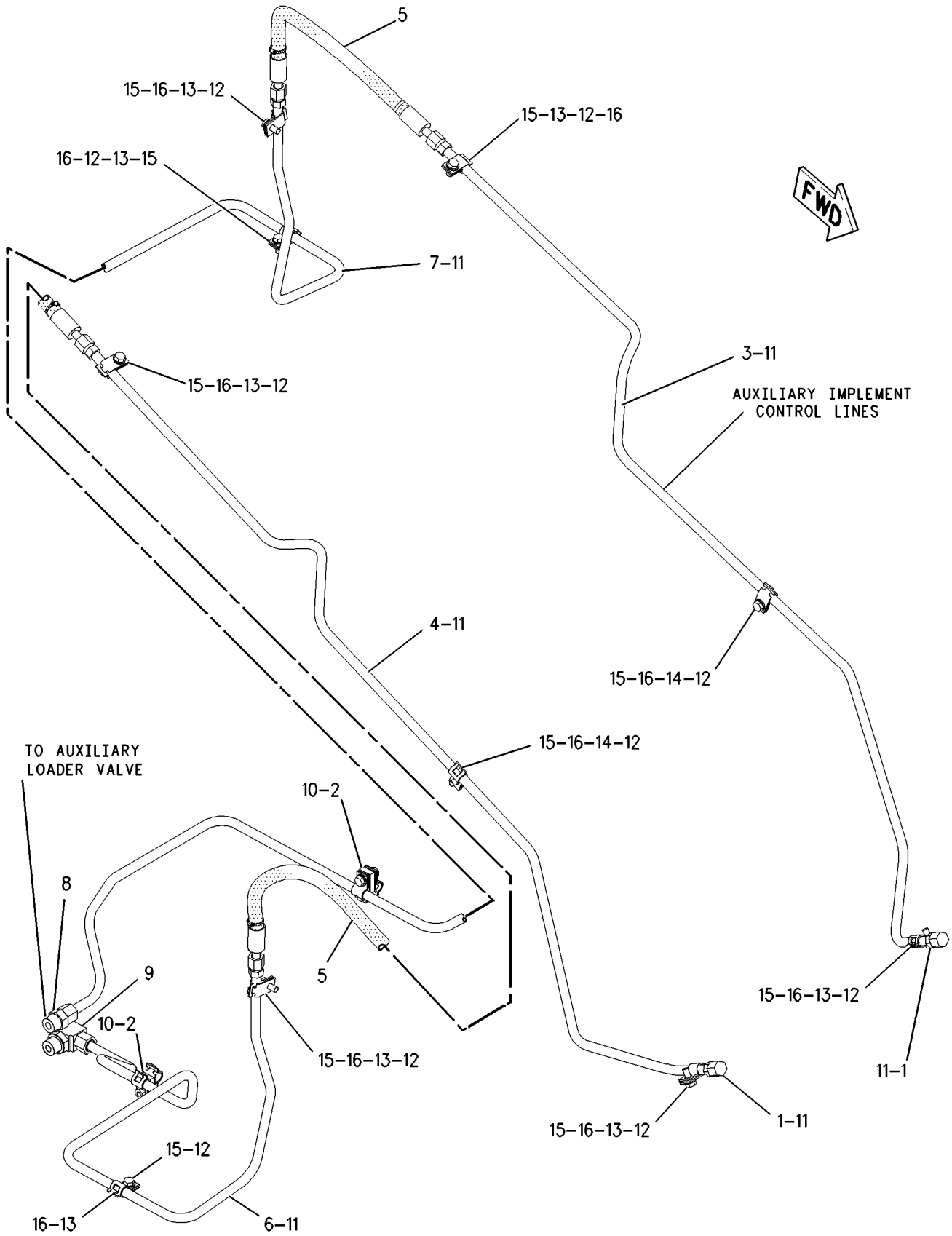


GRAPHIC #1 **<END>** g00902868

# HYDRAULIC SYSTEM

## *9R-3712* LINES GP-MULTIPURPOSE BUCKET

**S/N: BXC1-UP; DSX1-UP**
**PART OF 112-0938, 112-0939 BUCKET AR-MULTIPURPOSE**
**AN ATTACHMENT**

**SMCS-5057** **i01710049**

| NOTE | REF NO | GRAPHIC REF | PART NUMBER | QTY | PART NAME 1 2 3 4 5 6 (PRODUCT LEVEL) | SEE PAGE |
|---|---|---|---|---|---|---|
| | 1 | 1 | **6V-1249** | 2 | GROMMET | |
| I | 2 | 1 | **8E-3081** | 1 | HOSE AS | |
| I | 3 | 1 | **9R-0418** | 2 | HOSE AS | |
| I | 4 | 1 | **9R-5971** | 1 | HOSE AS | |
| I | 5 | 1 | **100-7442** | 1 | HOSE AS | |
| I | 6 | 1 | **117-7520** | 1 | HOSE AS | |
| | 7 | 1 | **148-8336** | 4 | CONNECTOR GP | |
| | | | | | (EACH INCLUDES) | |
| | | 1 | **3J-1907** | 1 | SEAL-O-RING | |
| | | 1 | **6V-8397** | 1 | SEAL-O-RING | |
| | | 1 | **6V-8636** | 1 | CONNECTOR | |
| | 8 | 1 | **150-3060** | 2 | TEE AS | |
| | | | | | (EACH INCLUDES) | |
| | | 1 | **6V-8397** | 2 | SEAL-O-RING | |
| | | 1 | **6V-8398** | 1 | SEAL-O-RING | |
| | | 1 | **8T-3444** | 1 | TEE-UNION ORIFICE | |
| | 9 | 1 | **5P-7464** | 2 | CLIP (SLOT) | |
| | 10 | 1 | **5P-7465** | 2 | CLIP (TAB) | |
| | 11 | 1 | **8T-1891** | 4 | CLIP (SLOT) | |
| | 12 | 1 | **8T-1892** | 4 | CLIP (TAB) | |
| | 13 | 1 | **8T-4121** | 2 | WASHER-HARD (11X21X2.5MM THK) | |
| M | 14 | 1 | **8T-4136** | 2 | BOLT (M10X1.5X25MM) | |
| M | 15 | 1 | **8T-4192** | 2 | BOLT (M12X1.75X25MM) | |
| | 16 | 1 | **8T-4223** | 2 | WASHER-HARD (13.5X25.5X3MM THK) | |

I-SEE HOSE FABRICATION GUIDE
M-METRIC PART

*9R-3712* **LINES GP-MULTIPURPOSE BUCKET** *(contd.)* **i01710049**

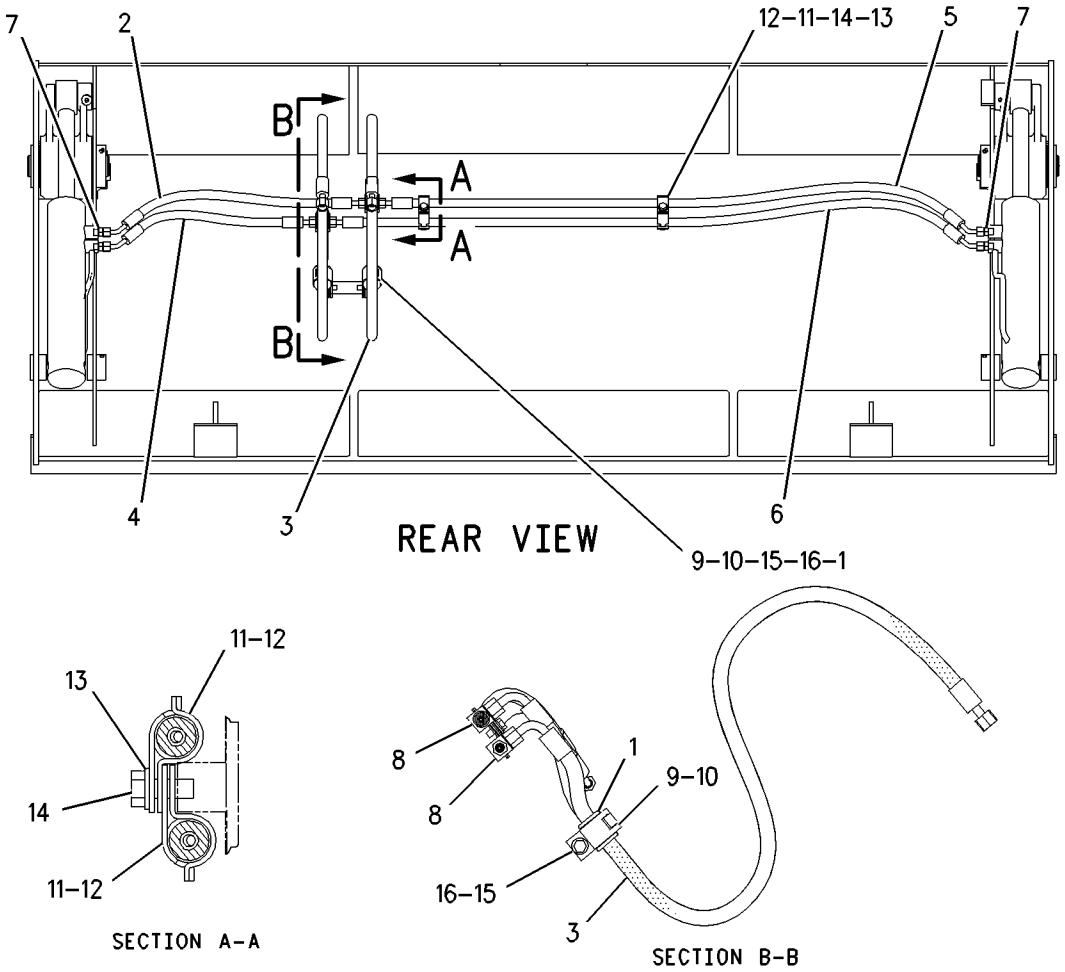


GRAPHIC #1 **<END>** g00882884

# HYDRAULIC SYSTEM

## *9R-5788* LINES GP-MULTIPURPOSE BUCKET

**S/N: BXC1-UP; DSX1-UP**
**PART OF 111-8634, 111-8635 BUCKET AR-MULTIPURPOSE**
**AN ATTACHMENT**

**SMCS-5057** **i01709708**

| NOTE | REF NO | GRAPHIC REF | PART NUMBER | QTY | PART NAME 1 2 3 4 5 6 (PRODUCT LEVEL) | SEE PAGE |
|---|---|---|---|---|---|---|
| | 1 | 1 | **6V-1249** | 2 | GROMMET | |
| I | 2 | 1 | **7I-5486** | 1 | HOSE AS | |
| I | 3 | 1 | **9R-0418** | 2 | HOSE AS | |
| I | 4 | 1 | **100-7443** | 1 | HOSE AS | |
| I | 5 | 1 | **100-7444** | 1 | HOSE AS | |
| I | 6 | 1 | **131-2127** | 1 | HOSE AS | |
| | 7 | 1 | *148-8336* | 4 | CONNECTOR GP | |
| | | | | | (EACH INCLUDES) | |
| | | 1 | **3J-1907** | 1 | SEAL-O-RING | |
| | | 1 | **6V-8397** | 1 | SEAL-O-RING | |
| | | 1 | **6V-8636** | 1 | CONNECTOR | |
| | 8 | 1 | *150-3060* | 2 | TEE AS | |
| | | | | | (EACH INCLUDES) | |
| | | 1 | **6V-8397** | 2 | SEAL-O-RING | |
| | | 1 | **6V-8398** | 1 | SEAL-O-RING | |
| | | 1 | **8T-3444** | 1 | TEE-UNION ORIFICE | |
| | 9 | 1 | **5P-7464** | 2 | CLIP (SLOT) | |
| | 10 | 1 | **5P-7465** | 2 | CLIP (TAB) | |
| C | 11 | 1 | **8T-1891** | 4 | CLIP (SLOT) | |
| C | 12 | 1 | **8T-1892** | 4 | CLIP (TAB) | |
| C | 13 | 1 | **8T-4121** | 2 | WASHER-HARD (11X21X2.5MM THK) | |
| CM | 14 | 1 | **8T-4136** | 2 | BOLT (M10X1.5X25MM) | |
| M | 15 | 1 | **8T-4192** | 2 | BOLT (M12X1.75X25MM) | |
| | 16 | 1 | **8T-4223** | 2 | WASHER-HARD (13.5X25.5X3MM THK) | |

C-CHANGE FROM PREVIOUS TYPE
I-SEE HOSE FABRICATION GUIDE
M-METRIC PART

*9R-5788* **LINES GP-MULTIPURPOSE BUCKET** *(contd.)* **i01709708**

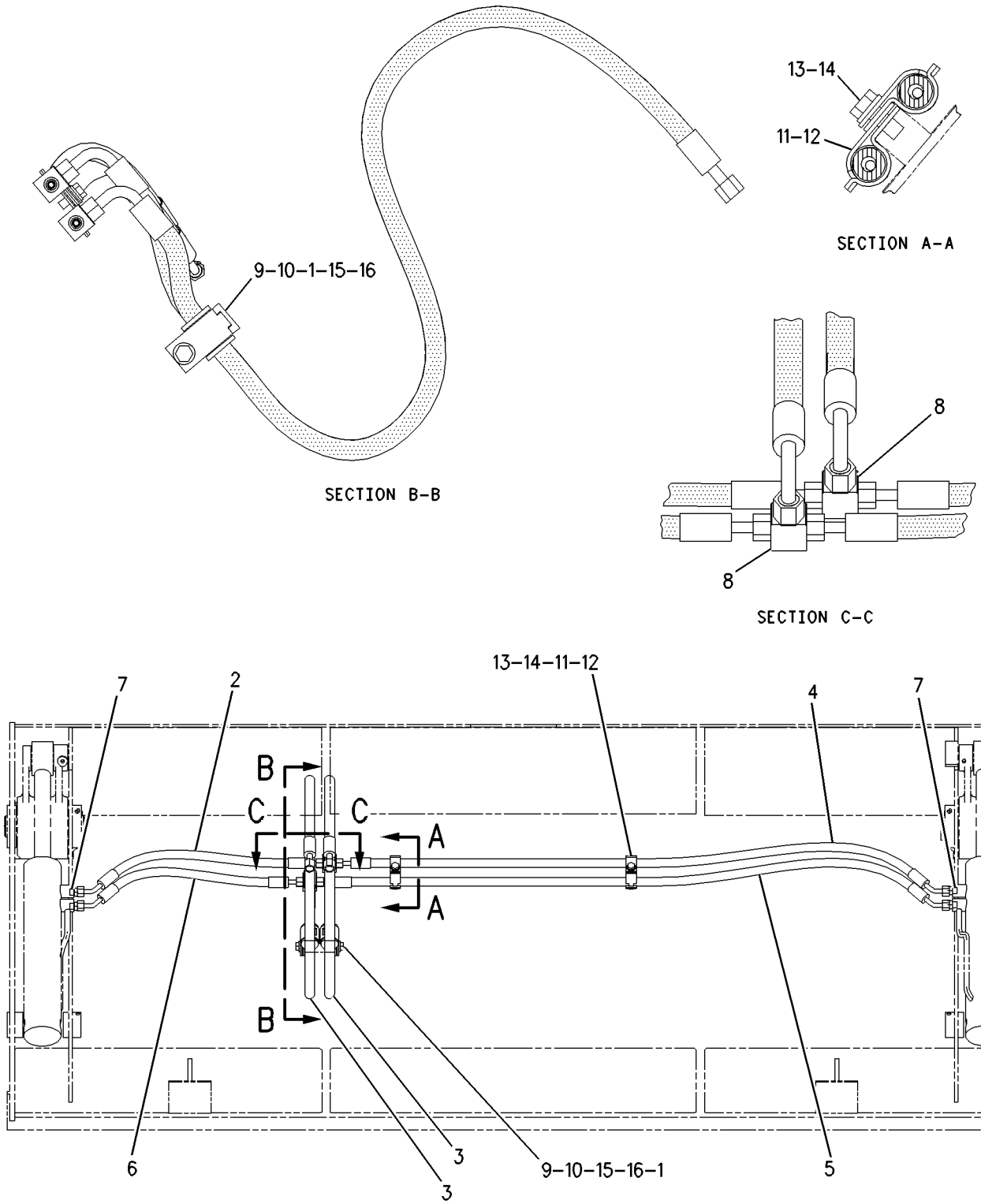


GRAPHIC #1 **<END>** g00879948

# HYDRAULIC SYSTEM

## *118-4930* LINES GP-MULTIPURPOSE BUCKET

**S/N: BXC1-UP; DSX1-UP**

**PART OF 124-0487, 124-0488, 208-0827 BUCKET AR-MULTIPURPOSE**

**AN ATTACHMENT**

**SMCS-5057** **i01790282**

| NOTE | REF NO | GRAPHIC REF | PART NUMBER | QTY | PART NAME 1 2 3 4 5 6 (PRODUCT LEVEL) | SEE PAGE |
|---|---|---|---|---|---|---|
| I | 1 | 1 | **9W-4363** | 1 | HOSE AS | |
| I | 2 | 1 | **120-4553** | 1 | HOSE AS | |
| I | 3 | 1 | **122-0668** | 2 | HOSE AS | |
| I | 4 | 1 | **122-0669** | 2 | HOSE AS | |
| | 5 | 1 | *148-8336* | 4 | CONNECTOR AS | |
| | | | | | (EACH INCLUDES) | |
| | | 1 | **3J-1907** | 1 | SEAL-O-RING | |
| | | 1 | **6V-8397** | 1 | SEAL-O-RING | |
| | | 1 | **6V-8636** | 1 | CONNECTOR | |
| | 6 | 1 | *150-3060* | 2 | TEE AS | |
| | | | | | (EACH INCLUDES) | |
| | | 1 | **6V-8397** | 2 | SEAL-O-RING | |
| | | 1 | **6V-8398** | 1 | SEAL-O-RING | |
| | | 1 | **8T-3444** | 1 | TEE-UNION ORIFICE | |
| | 7 | 1 | **5P-7464** | 2 | CLIP (SLOT) | |
| | 8 | 1 | **5P-7465** | 2 | CLIP (TAB) | |
| | 9 | 1 | **6V-1249** | 2 | GROMMET | |
| | 10 | 1 | **8T-1891** | 4 | CLIP (SLOT) | |
| | 11 | 1 | **8T-1892** | 4 | CLIP (TAB) | |
| | 12 | 1 | **8T-4121** | 2 | WASHER-HARD (11X21X2.5MM THK) | |
| M | 13 | 1 | **8T-4136** | 2 | BOLT (M10X1.5X25MM) | |
| M | 14 | 1 | **8T-4192** | 2 | BOLT (M12X1.75X25MM) | |
| | 15 | 1 | **8T-4223** | 2 | WASHER-HARD (13.5X25.5X3MM THK) | |

I-SEE HOSE FABRICATION GUIDE
M-METRIC PART

*118-4930* **LINES GP-MULTIPURPOSE BUCKET** *(contd.)* **i01790282**

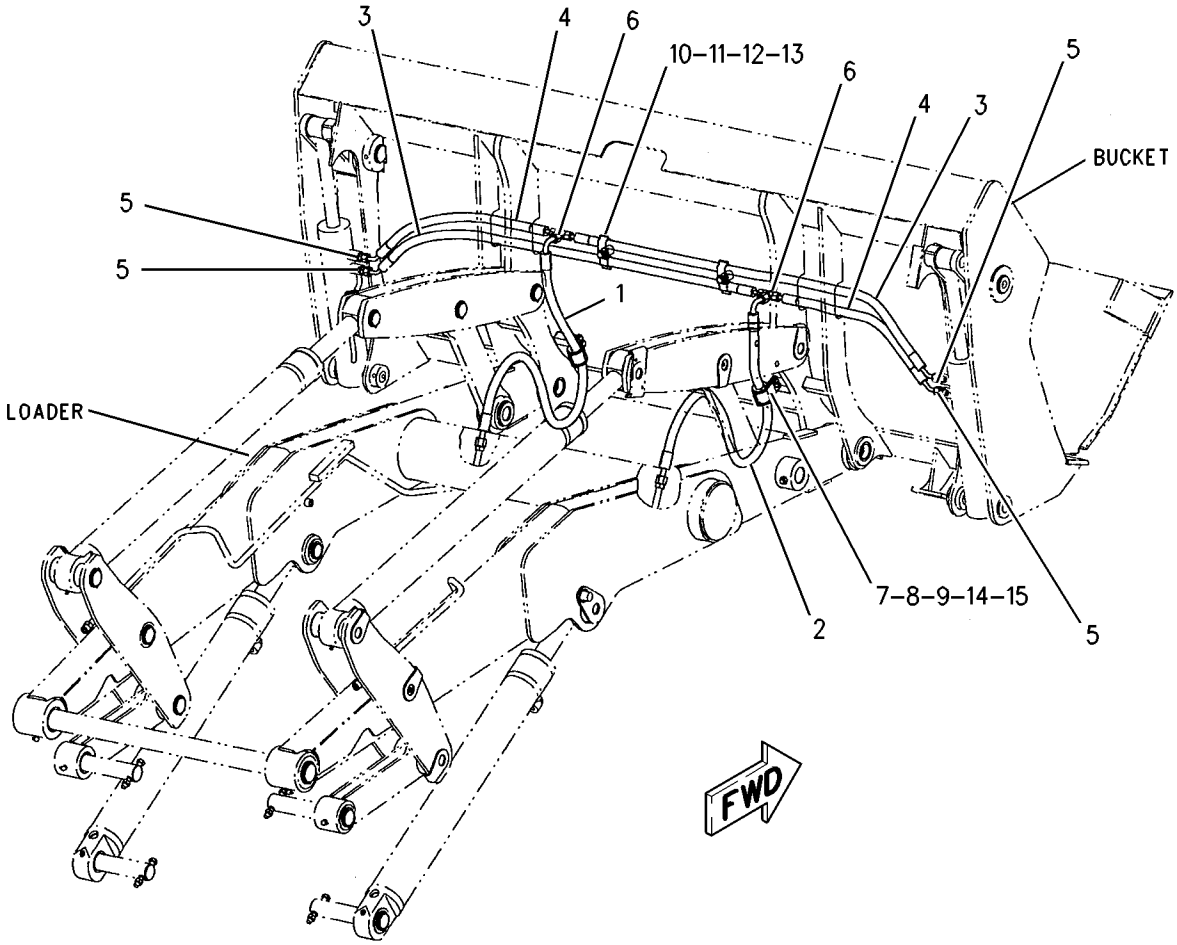


GRAPHIC #1 **<END>** g00916210

# HYDRAULIC SYSTEM

## *119-4112* LINES GP-MULTIPURPOSE BUCKET

**S/N: BXC1-UP; DSX1-UP**

**PART OF 124-0486, 124-0489, 164-4659 BUCKET AR-MULTIPURPOSE**

**AN ATTACHMENT**

**SMCS-5057** **i01981450**

| NOTE | REF NO | GRAPHIC REF | PART NUMBER | QTY | PART NAME 1 2 3 4 5 6 (PRODUCT LEVEL) | SEE PAGE |
|---|---|---|---|---|---|---|
| I | 1 | 1 | **235-6020** | 1 | HOSE AS | |
| I | 2 | 1 | **235-6017** | 2 | HOSE AS | |
| I | 3 | 1 | **235-6019** | 1 | HOSE AS | |
| I | 4 | 1 | **235-6018** | 2 | HOSE AS | |
| | 5 | 1 | *148-8336* | 4 | CONNECTOR AS | |
| | | | | | (EACH INCLUDES) | |
| | | 1 | **3J-1907** | 1 | SEAL-O-RING | |
| | | 1 | **6V-8397** | 1 | SEAL-O-RING | |
| | | 1 | **6V-8636** | 1 | CONNECTOR | |
| | 6 | 1 | *150-3060* | 2 | TEE AS | |
| | | | | | (EACH INCLUDES) | |
| | | 1 | **6V-8397** | 2 | SEAL-O-RING | |
| | | 1 | **6V-8398** | 1 | SEAL-O-RING | |
| | | 1 | **8T-3444** | 1 | TEE-UNION ORIFICE | |
| | 7 | 1 | **5P-7464** | 2 | CLIP (SLOT) | |
| | 8 | 1 | **5P-7465** | 2 | CLIP (TAB) | |
| | 9 | 1 | **6V-1249** | 2 | GROMMET | |
| | 10 | 1 | **8T-1887** | 4 | CLIP (SLOT) | |
| | 11 | 1 | **8T-1888** | 4 | CLIP (TAB) | |
| | 12 | 1 | **8T-4121** | 2 | WASHER-HARD (11X21X2.5MM THK) | |
| M | 13 | 1 | **8T-4136** | 2 | BOLT (M10X1.5X25MM) | |
| M | 14 | 1 | **8T-4192** | 2 | BOLT (M12X1.75X25MM) | |
| | 15 | 1 | **8T-4223** | 2 | WASHER-HARD (13.5X25.5X3MM THK) | |

I-REFER TO HYDRAULIC INFORMATION SYSTEM
M-METRIC PART

*119-4112* **LINES GP-MULTIPURPOSE BUCKET** *(contd.)* **i01981450**

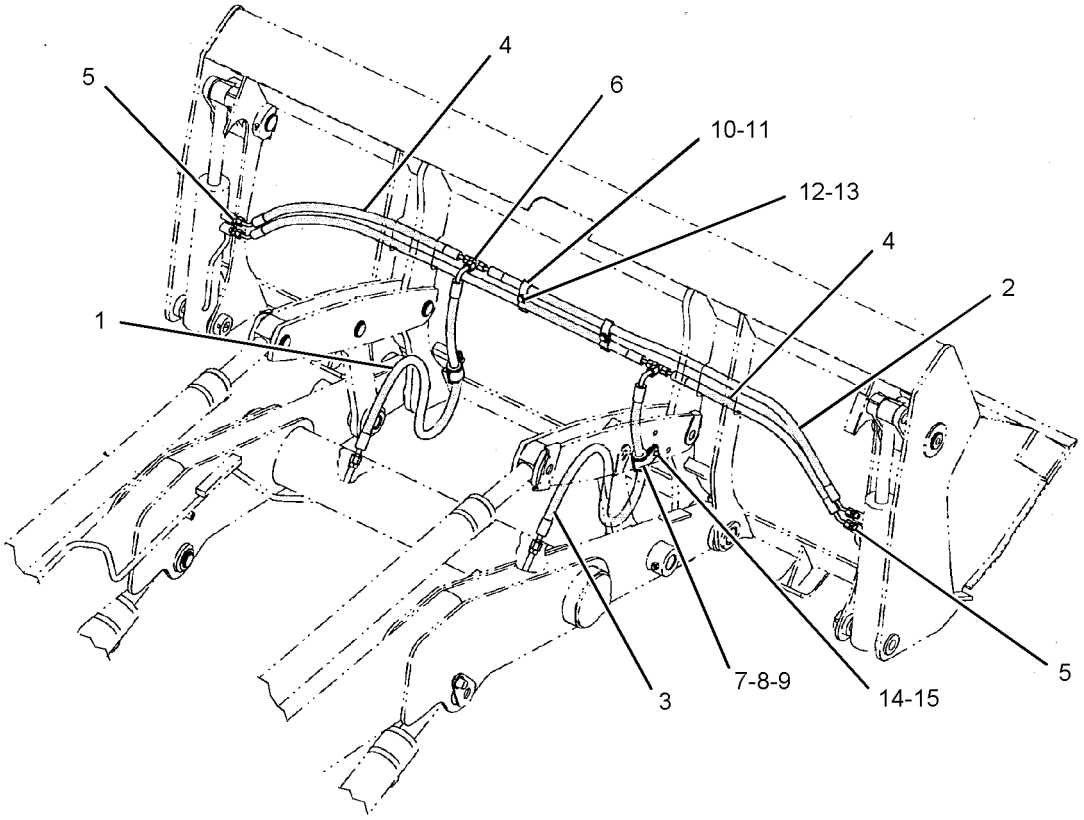


GRAPHIC #1 **<END>** g01035200

# HYDRAULIC SYSTEM

## *188-9097* LINES GP-PILOT

**S/N: BXC1-UP; DSX1-UP**
**PRESSURE, STABILIZER ONLY**
**PART OF 237-9288, 237-9289 CHASSIS AR**

**SMCS-5057, 5059** **i02001541**

| NOTE | REF NO | GRAPHIC REF | PART NUMBER | QTY | PART NAME 1 2 3 4 5 6 (PRODUCT LEVEL) | SEE PAGE |
|---|---|---|---|---|---|---|
| | 1 | 1,2 | **5D-1026** | 2 | CLAMP-HOSE | |
| | 2 | 2 | **6V-0852** | 1 | CAP-DUST | |
| | 3 | 1 | *090-5725* | 1 | ELBOW | |
| | 4 | 2 | **111-1374** | 1 | BRACKET | |
| | 5 | 2 | *164-5567* | 1 | FITTING AS | |
| | | 2 | **3J-1907** | 1 | SEAL-O-RING | |
| | | 2 | **6V-3965** | 1 | FITTING (QUICK DISCONNECT) | |
| | 6 | 2 | **166-1579** | 1 | CLIP | |
| | 7 | 2 | *166-2033* | 1 | TEE GP | |
| | | 2 | **4J-5477** | 1 | SEAL-O-RING | |
| | | 2 | **7X-2444** | 1 | TEE-SWIVEL | |
| | 8 | 2 | *174-6740* | 1 | TEE AS | |
| | | 2 | **2M-9780** | 1 | SEAL-O-RING | |
| | | 2 | **122-1113** | 1 | TEE-O-RING (12.7MM ID) | |
| | 9 | 1,2 | **210-8916** | 1 | BLOCK | |
| | 10 | 2 | *148-8325* | 1 | CONNECTOR GP | |
| | | 2 | **3J-1907** | 1 | SEAL-O-RING | |
| | | 2 | **4J-5477** | 1 | SEAL-O-RING | |
| | | 2 | **6V-8641** | 1 | CONNECTOR | |
| | 11 | 2 | *148-8407* | 1 | PLUG GP | |
| | | 2 | **3J-1907** | 1 | SEAL-O-RING | |
| | | 2 | **9S-4191** | 1 | PLUG | |
| | 12 | 1 | **3J-1907** | 1 | SEAL-O-RING | |
| M | 13 | 2 | **5C-7261** | 1 | NUT (M8X1.25 THD) | |
| M | 14 | 2 | **5C-9553** | 1 | BOLT (M6X1X16MM) | |
| | 15 | 2 | **5P-4115** | 2 | WASHER-HARD (7.2X19X2MM THK) | |
| | 16 | 2 | **6D-4246** | 5 | CLIP | |
| | 17 | 2 | **9M-8406** | 1 | CLIP | |
| | 18 | 2 | **6V-9828** | 1 | CAP AS | |
| | 19 | 2 | **7D-7233** | 1 | CLIP | |
| | 20 | 2 | **8T-4121** | 4 | WASHER-HARD (11X21X2.5MM THK) | |
| M | 21 | 2 | **8T-4133** | 2 | NUT (M10X1.5 THD) | |
| M | 22 | 2 | **8T-4189** | 1 | BOLT (M8X1.25X20MM) | |
| M | 23 | 2 | **8T-4195** | 2 | BOLT (M10X1.5X30MM) | |
| | 24 | 2 | **8T-4224** | 2 | WASHER-HARD (8.8X16X2MM THK) | |
| | 25 | 1 | **5P-1505** | | HOSE (275CM) | |

M-METRIC PART

*188-9097* **LINES GP-PILOT** *(contd.)* **i02001541**

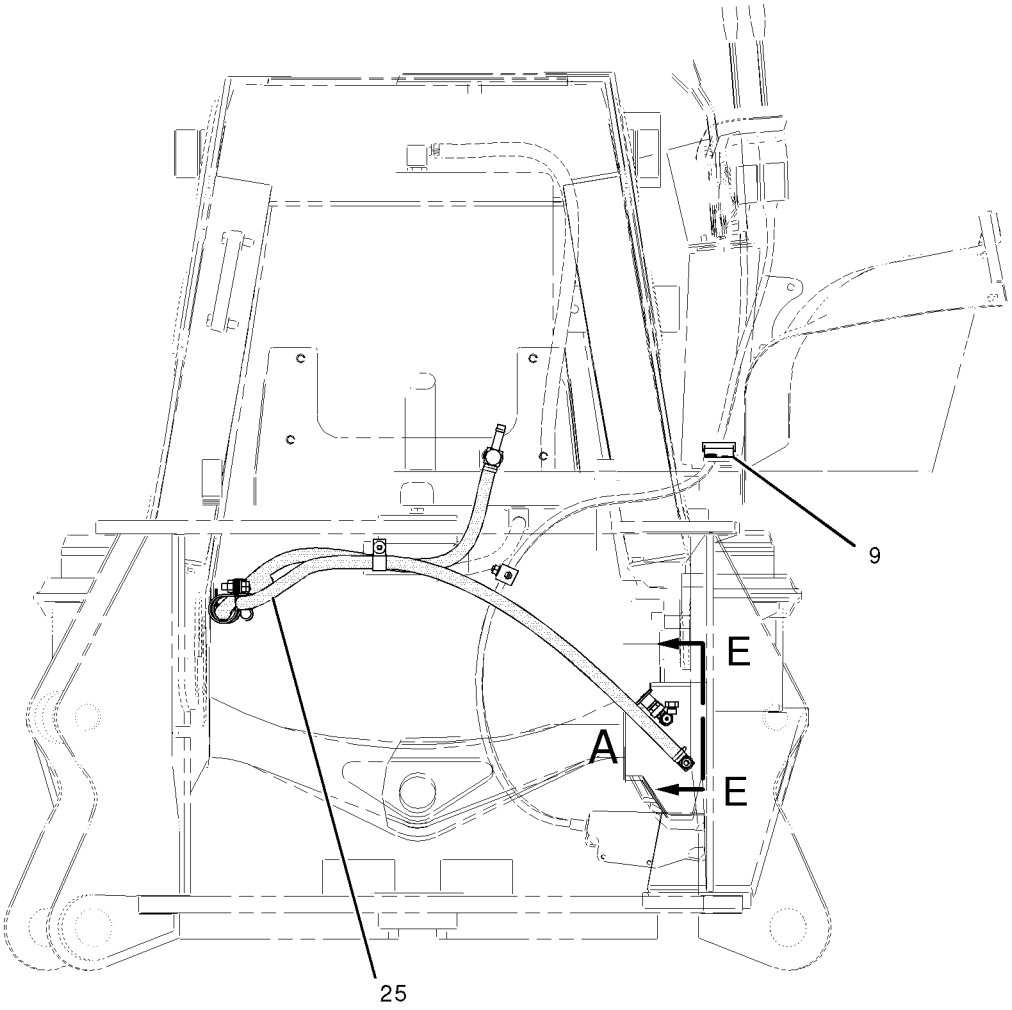


REAR VIEW

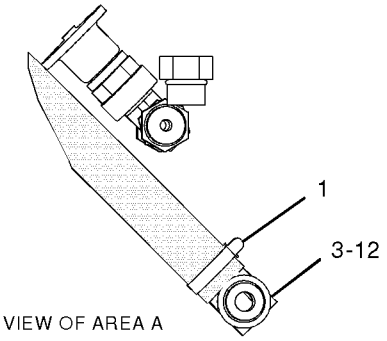


VIEW OF AREA A

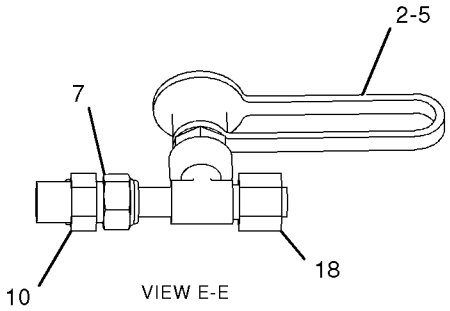


VIEW E-E

GRAPHIC #1 g01035818

*188-9097* **LINES GP-PILOT** *(contd.)* **i02001541**

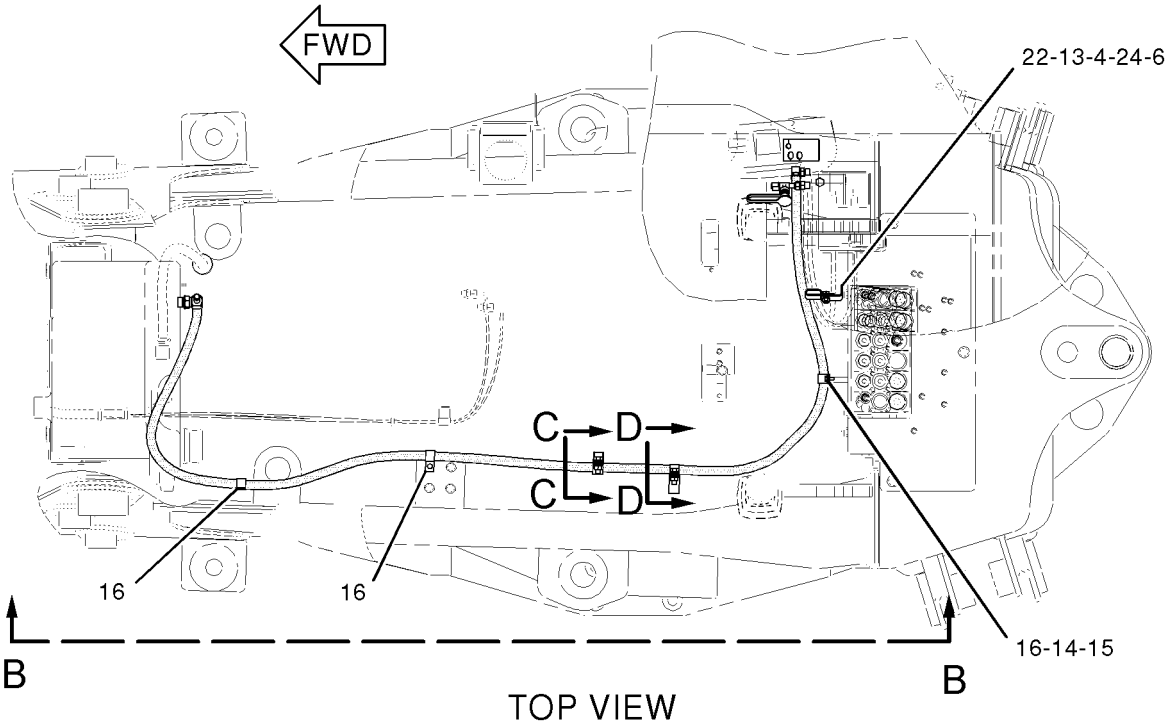


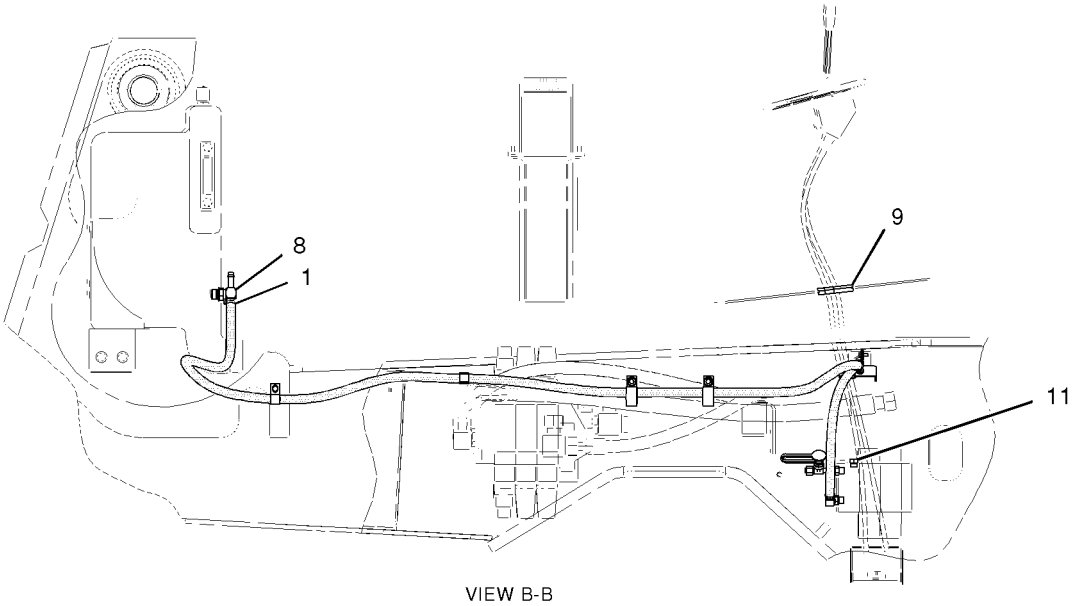


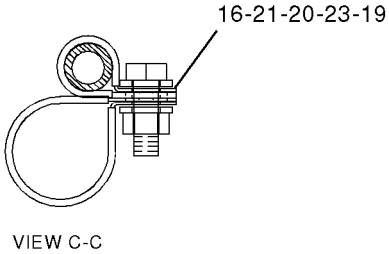


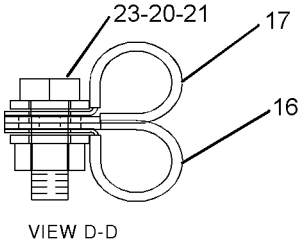


GRAPHIC #2 **<END>** g01035820

# HYDRAULIC SYSTEM

## *190-8954* LINES GP-PUMP

**S/N: BXC1-UP; DSX1-UP**

**PART OF 237-6463 DRIVE AR-BACKHOE LOADER**

**SMCS-5057** **i01799091**

| NOTE | REF NO | GRAPHIC REF | PART NUMBER | QTY | PART NAME 1 2 3 4 5 6 (PRODUCT LEVEL) | SEE PAGE |
|---|---|---|---|---|---|---|
| I | 1 | 1 | **120-4604** | 1 | HOSE AS | |
| I | 2 | 1 | **190-8956** | 1 | HOSE AS | |
| | 3 | 1 | **220-0248** | 1 | PLATE AS | |
| | 4 | 1 | *148-8316* | 2 | CONNECTOR AS | |
| | | | | | (EACH INCLUDES) | |
| | | 1 | **3J-7354** | 1 | SEAL-O-RING | |
| | | 1 | **4J-5477** | 1 | SEAL-O-RING | |
| | | 1 | **6V-8647** | 1 | CONNECTOR | |
| | 5 | 1 | *148-8351* | 1 | ELBOW GP | |
| | | 1 | **4J-5477** | 1 | SEAL-O-RING | |
| | | 1 | **6V-9849** | 1 | ELBOW (SWIVEL) | |
| | 6 | 1 | *148-8369* | 1 | ELBOW GP | |
| | | 1 | **3J-7354** | 1 | SEAL-O-RING | |
| | | 1 | **4J-5477** | 1 | SEAL-O-RING | |
| | | 1 | **6V-8628** | 1 | ELBOW | |
| | 7 | 1 | **5K-0906** | 2 | BOLT (5/16-18X0.63 IN) | |
| | 8 | 1 | **6K-8178** | 1 | CLIP | |
| | 9 | 1 | **8T-4121** | 1 | WASHER-HARD (11X21X2.5MM THK) | |
| M | 10 | 1 | **8T-4137** | 1 | BOLT (M10X1.5X20MM) | |
| | 11 | 1 | **8T-4224** | 2 | WASHER-HARD (8.8X16X2MM THK) | |
| | 12 | 1 | **9M-8406** | 1 | CLIP | |

I-SEE HOSE FABRICATION GUIDE
M-METRIC PART

*190-8954* **LINES GP-PUMP** *(contd.)* **i01799091**

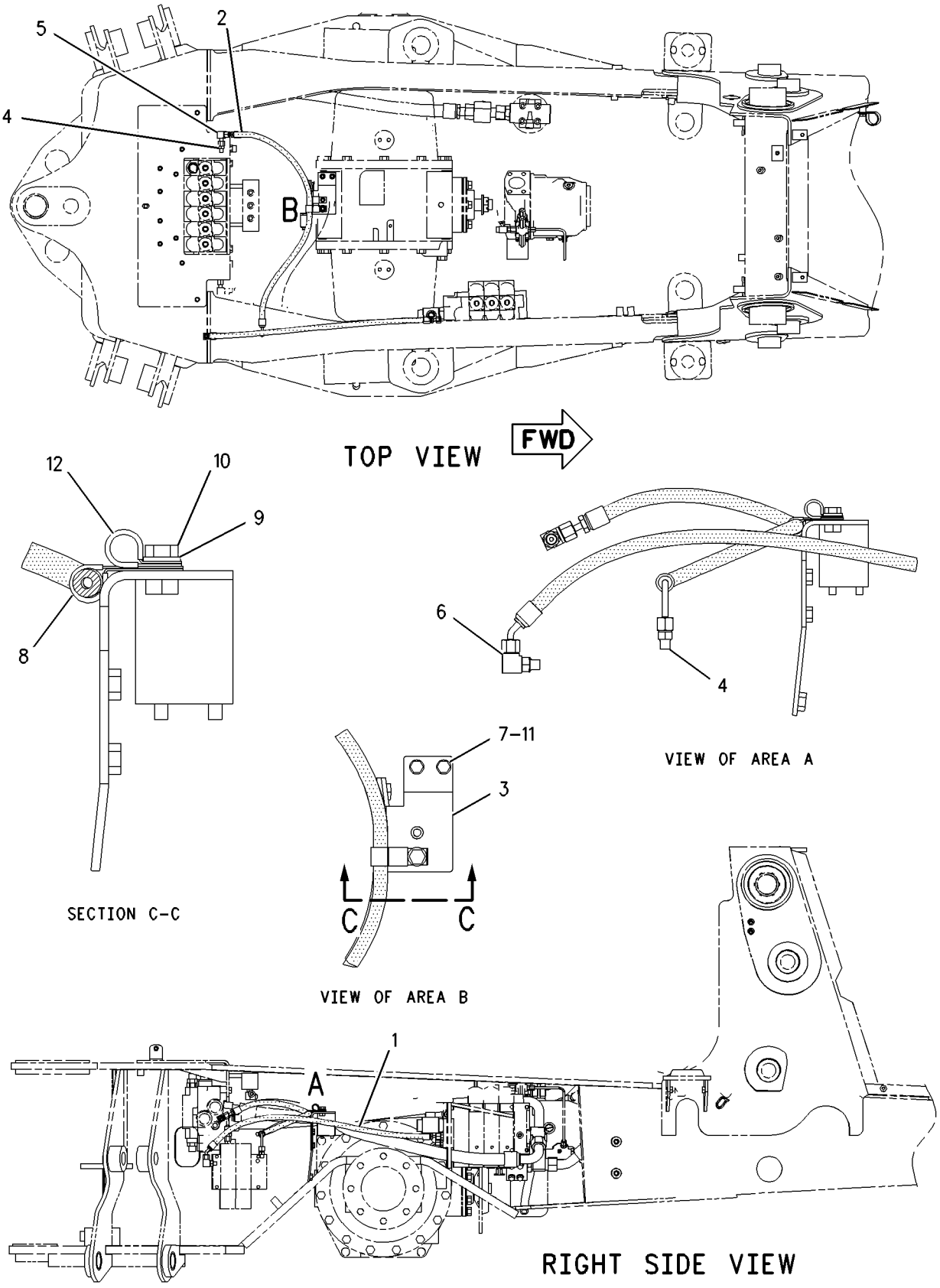


GRAPHIC #1 **<END>** g01007716

# HYDRAULIC SYSTEM

## *235-4551* LINES GP-PUMP

**S/N: BXC1-UP; DSX1-UP**

**PART OF 237-9297, 237-9298 HYDRAULIC AR**

**SMCS-5057** **i02000631**

| NOTE | REF NO | GRAPHIC REF | PART NUMBER | QTY | PART NAME 1 2 3 4 5 6 (PRODUCT LEVEL) | SEE PAGE |
|---|---|---|---|---|---|---|
| | 1 | 1,2 | **5D-1026** | 2 | CLAMP-HOSE | |
| | 2 | 2 | **5P-4868** | 2 | CLAMP-HOSE | |
| | 3 | 2 | **6V-0852** | 1 | CAP-DUST | |
| | 4 | 1,2 | **7K-1181** | 5 | STRAP-CABLE | |
| | 5 | 2 | **110-2445** | 4 | CLAMP-HOSE | |
| | 6 | 1 | **130-9984** | 1 | CLIP | |
| | 7 | 1 | **144-0367** | 1 | CLAMP-HOSE | |
| | 8 | 2 | **159-0186** | 4 | CLAMP | |
| | 9 | 2 | **211-4348** | 1 | ELBOW | |
| | 10 | 1 | **215-9632** | 1 | SPACER (12X20X20MM THK) | |
| | 11 | 2 | **148-8357** | 1 | ELBOW GP | |
| | | 2 | **5K-9090** | 1 | SEAL-O-RING | |
| | | 2 | **7M-8485** | 1 | SEAL-O-RING | |
| | 12 | 2 | **232-0252** | 1 | TEE | |
| | 13 | 2 | **235-4553** | 1 | BRACKET AS | |
| M | | 2 | **8T-3490** | 3 | NUT-WELD (M10X1.5 THD) | |
| I | 14 | 1 | **235-5306** | 1 | HOSE AS | |
| | 15 | 2 | **235-7091** | 1 | HOSE | |
| | 16 | 1 | **235-8528** | 1 | HOSE | |
| E | 17 | 1 | **5P-1505** | | HOSE (72CM) | |
| | 18 | 2 | *148-8352* | 1 | ELBOW GP | |
| | | 2 | **5K-9090** | 1 | SEAL-O-RING | |
| | | 2 | **6V-9854** | 1 | ELBOW (SWIVEL) | |
| | 19 | 1 | *148-8362* | 1 | ELBOW GP | |
| | | 1 | **3D-2824** | 1 | SEAL-O-RING | |
| | | 1 | **5K-9090** | 1 | SEAL-O-RING | |
| | | 1 | **8T-6684** | 1 | ELBOW | |
| | 20 | 2 | *148-8422* | 1 | TEE AS | |
| | | 2 | **5K-9090** | 1 | SEAL-O-RING | |
| | | 2 | **6V-9746** | 1 | SEAL-O-RING | |
| | | 2 | **7M-8485** | 1 | SEAL-O-RING | |
| | | 2 | **8T-6356** | 1 | TEE-O-RING PORT | |
| | 21 | 2 | *150-3027* | 1 | ELBOW AS | |
| | | 2 | **2M-9780** | 1 | SEAL-O-RING | |
| | | 2 | **6V-5653** | 1 | ELBOW (7/8-14 THD) | |
| E | 22 | 1 | **5P-1506** | | HOSE (95CM) | |
| | 23 | 2 | *164-5567* | 1 | FITTING AS | |
| | | 2 | **3J-1907** | 1 | SEAL-O-RING | |
| | | 2 | **6V-3965** | 1 | FITTING (QUICK DISCONNECT) | |
| E | 24 | 2 | **136-1955** | | HOSE (201CM) | |
| | 25 | 2 | **1P-4584** | 2 | FLANGE-HALF | |
| | 26 | 2 | **5P-4116** | 2 | WASHER-HARD (8.8X20.5X2MM THK) | |
| | 27 | 2 | **6J-2680** | 1 | SEAL-O-RING | |
| | 28 | 1,2 | **7D-7233** | 3 | CLIP | |
| E | 29 | 2 | **136-1955** | | HOSE (100CM) | |
| | 30 | 1,2 | **8T-4121** | 11 | WASHER-HARD (11X21X2.5MM THK) | |
| M | 31 | 1,2 | **8T-4136** | 5 | BOLT (M10X1.5X25MM) | |
| M | 32 | 1 | **8T-4137** | 2 | BOLT (M10X1.5X20MM) | |
| M | 33 | 1 | **8T-4182** | 1 | BOLT (M10X1.5X45MM) | |
| M | 34 | 2 | **8T-4183** | 4 | BOLT (M12X1.75X40MM) | |
| M | 35 | 2 | **8T-4189** | 2 | BOLT (M8X1.25X20MM) | |
| M | 36 | 1 | **8T-4195** | 3 | BOLT (M10X1.5X30MM) | |
| | 37 | 2 | **8T-4223** | 4 | WASHER-HARD (13.5X25.5X3MM THK) | |
| | 38 | 1,2 | **8T-7529** | 3 | CLIP | |

## *235-4551* **LINES GP-PUMP** *(contd.)* **i02000631**

E-ORDER BY THE CENTIMETER
I-REFER TO HYDRAULIC INFORMATION SYSTEM
M-METRIC PART

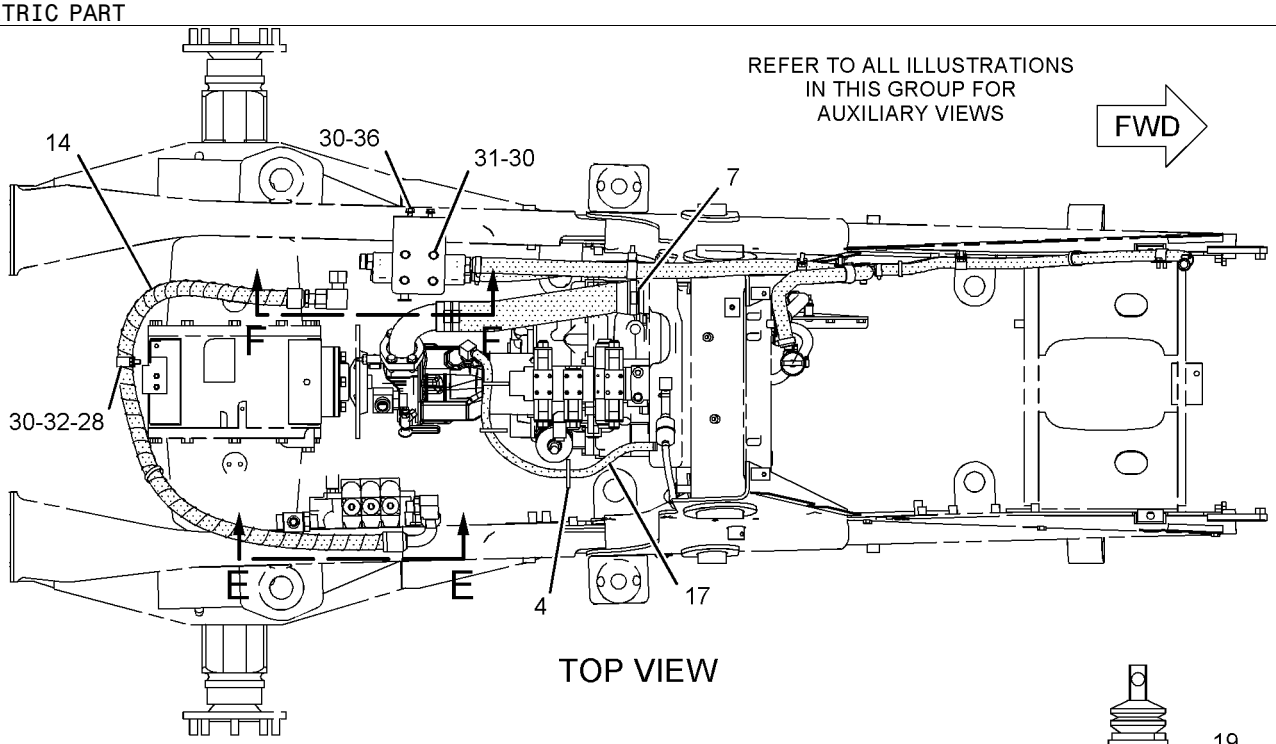


TOP VIEW

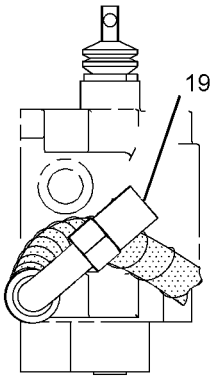


VIEW C-C

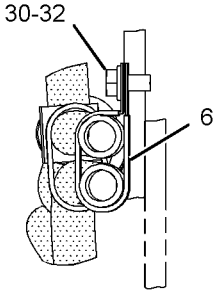


SECTION B-B

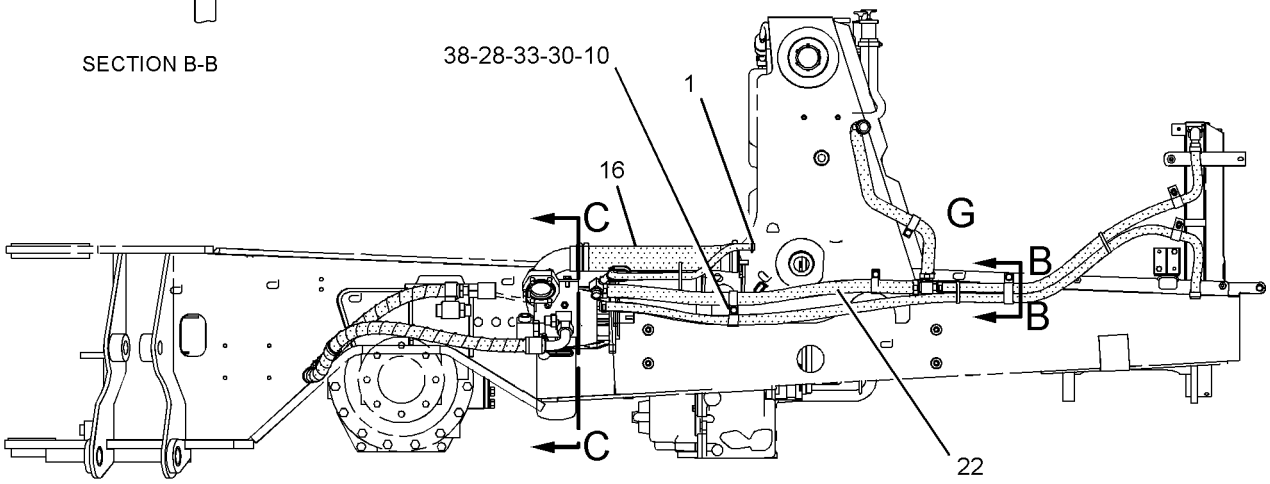


RIGHT SIDE VIEW

GRAPHIC #1 g01035283

*235-4551* **LINES GP-PUMP** *(contd.)* **i02000631**

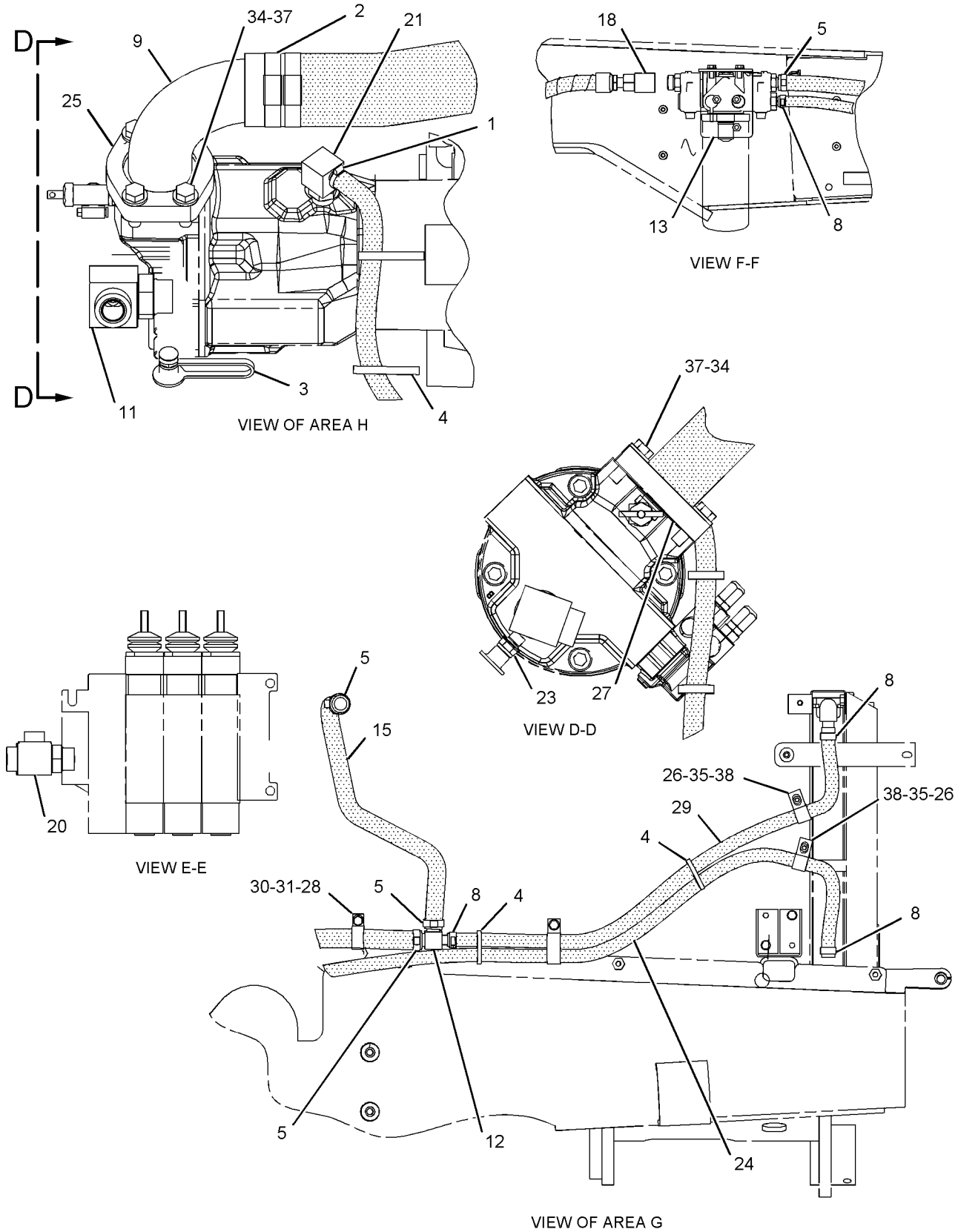


GRAPHIC #2 **<END>** g01035267

# HYDRAULIC SYSTEM

## *235-5855* LINES GP-PUMP

**S/N: BXC1-UP; DSX1-UP**
**PART OF 240-3183 VALVE AR-BANK 6**
**AN ATTACHMENT**

**SMCS-5057** **i01986721**

| NOTE | REF NO | GRAPHIC REF | PART NUMBER | QTY | PART NAME 1 2 3 4 5 6 (PRODUCT LEVEL) | SEE PAGE |
|---|---|---|---|---|---|---|
| I | 1 | 1 | **190-4164** | 1 | HOSE AS | |
| I | 2 | 1 | **235-9777** | 1 | HOSE AS | |
| | 3 | 1 | *148-8335* | 1 | CONNECTOR AS | |
| | | 1 | **5K-9090** | 1 | SEAL-O-RING | |
| | | 1 | **6V-8635** | 1 | CONNECTOR | |
| | | 1 | **7M-8485** | 1 | SEAL-O-RING | |
| | 4 | 1 | *148-8429* | 1 | TEE AS | |
| | | 1 | **5K-9090** | 2 | SEAL-O-RING | |
| | | 1 | **6V-9840** | 1 | TEE-SWIVEL | |

I-REFER TO HYDRAULIC INFORMATION SYSTEM

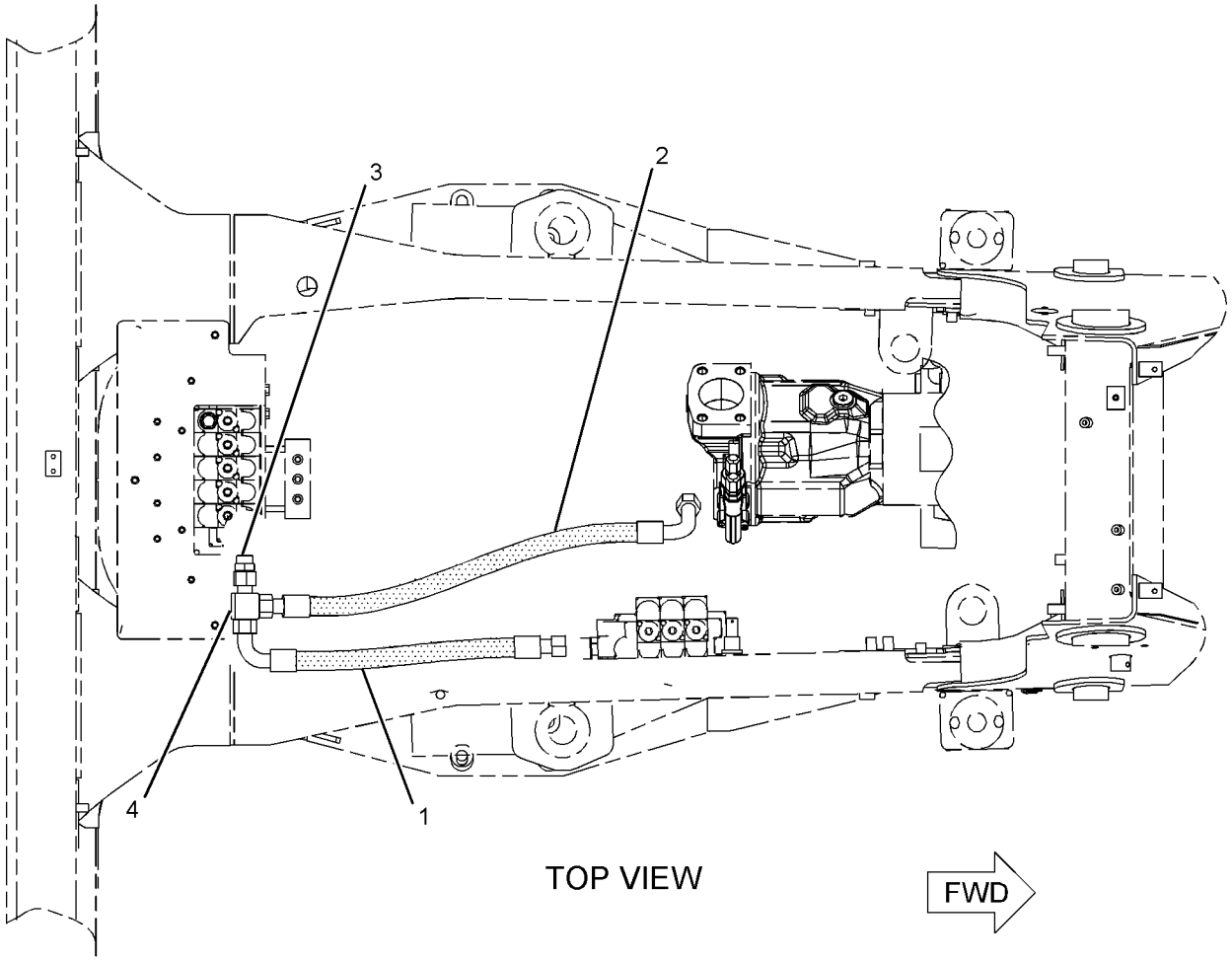


GRAPHIC #1 **<END>** g01035899

# HYDRAULIC SYSTEM

## *235-5857* LINES GP-PUMP

**S/N: BXC1-UP; DSX1-UP**
**PART OF 240-3184 VALVE AR-BANK 4, 240-3185 VALVE AR-BANK 5**
**AN ATTACHMENT**

**SMCS-5057** **i01986715**

| NOTE | REF NO | GRAPHIC REF | PART NUMBER | QTY | PART NAME 1 2 3 4 5 6 (PRODUCT LEVEL) | SEE PAGE |
|---|---|---|---|---|---|---|
| I | 1 | 1 | **190-4164** | 1 | HOSE AS | |
| I | 2 | 1 | **235-9777** | 1 | HOSE AS | |
| | 3 | 1 | *148-8429* | 1 | TEE AS | |
| | | 1 | **5K-9090** | 2 | SEAL-O-RING | |
| | | 1 | **6V-9840** | 1 | TEE-SWIVEL | |
| | 4 | 1 | *164-5594* | 1 | CONNECTOR AS | |
| | | 1 | **5K-9090** | 1 | SEAL-O-RING | |
| | | 1 | **7M-8485** | 1 | SEAL-O-RING | |
| | | 1 | **8C-5723** | 1 | CONNECTOR | |

I-REFER TO HYDRAULIC INFORMATION SYSTEM

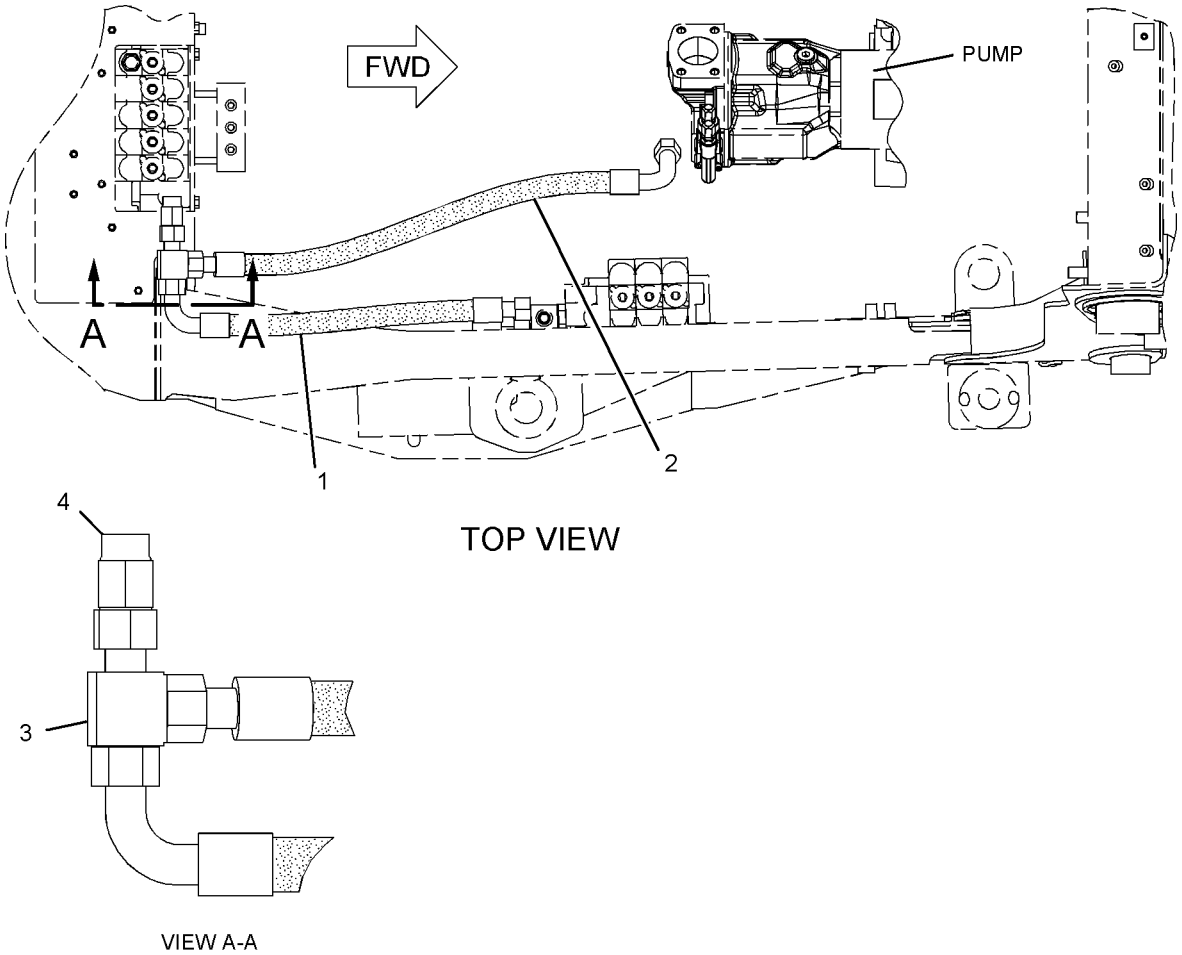


GRAPHIC #1 **<END>** g01035290

# HYDRAULIC SYSTEM

## *235-5858* LINES GP-PUMP–6 BANK

**S/N: BXC1-UP; DSX1-UP**
**PART OF 240-3186 VALVE AR-BANK 6**
**AN ATTACHMENT**

**SMCS-5057** **i01967447**

| NOTE | REF NO | GRAPHIC REF | PART NUMBER | QTY | PART NAME 1 2 3 4 5 6 (PRODUCT LEVEL) | SEE PAGE |
|---|---|---|---|---|---|---|
| I | 1 | 1 | **190-4164** | 1 | HOSE AS | |
| I | 2 | 1 | **235-9777** | 1 | HOSE AS | |
| | 3 | 1 | *148-8431* | 1 | TEE GP | |
| | | 1 | **5K-9090** | 2 | SEAL-O-RING | |
| | | 1 | **6V-8785** | 1 | TEE | |
| | | 1 | **7M-8485** | 1 | SEAL-O-RING | |

I-REFER TO HYDRAULIC INFORMATION SYSTEM

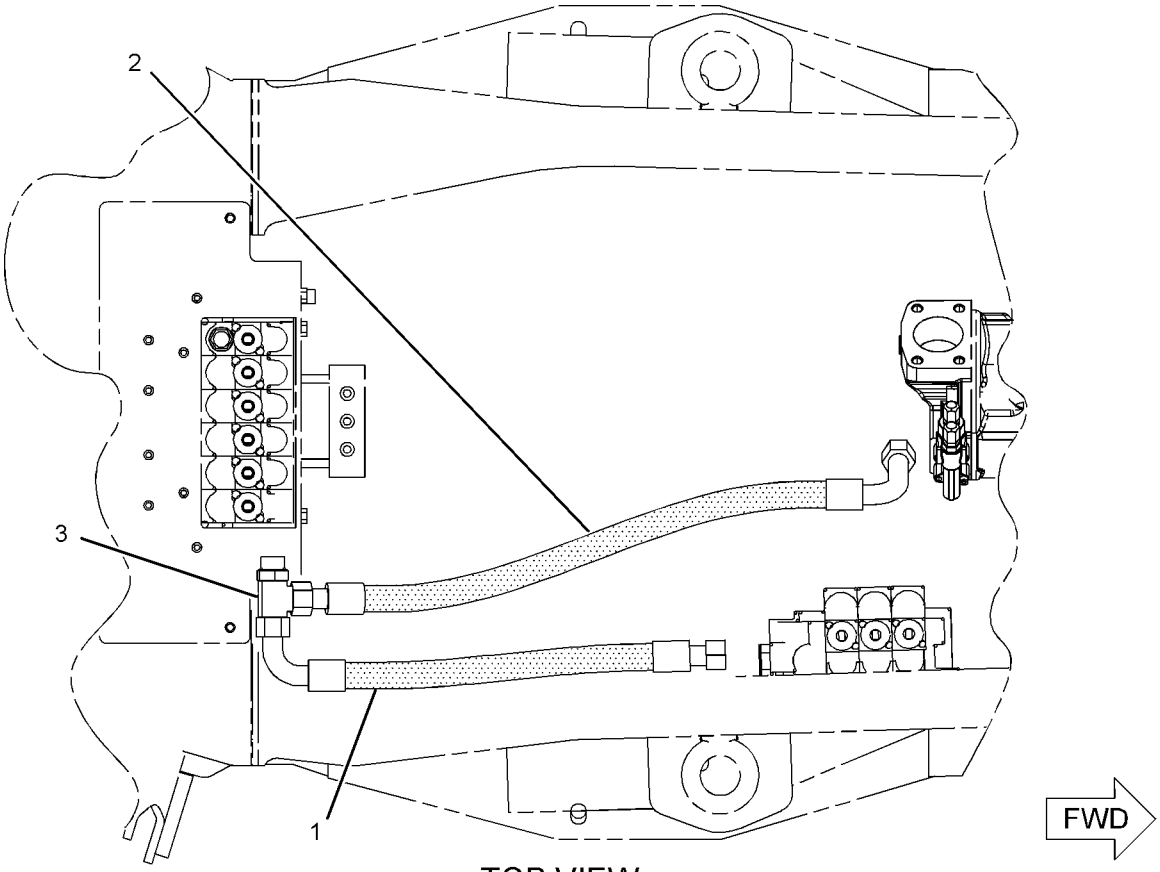


TOP VIEW

GRAPHIC #1 **<END>** g01022720

# HYDRAULIC SYSTEM

## *236-0695* LINES GP-PUMP

**S/N: BXC1-UP; DSX1-UP**

**PART OF 240-3181 VALVE AR-BANK 4, 240-3182 VALVE AR-BANK 5**

**AN ATTACHMENT**

**SMCS-5057** **i01986649**

| NOTE | REF NO | GRAPHIC REF | PART NUMBER | QTY | PART NAME 1 2 3 4 5 6 (PRODUCT LEVEL) | SEE PAGE |
|---|---|---|---|---|---|---|
| I | 1 | 1 | **190-4164** | 1 | HOSE AS | |
| | 2 | 1 | *197-0398* | 1 | CONNECTOR GP | |
| | | 1 | **5K-9090** | 1 | SEAL-O-RING | |
| | | 1 | **7M-8485** | 1 | SEAL-O-RING | |
| | | 1 | **8C-3443** | 1 | CONNECTOR | |
| I | 3 | 1 | **235-9777** | 1 | HOSE AS | |
| | 4 | 1 | *148-8429* | 1 | TEE AS | |
| | | 1 | **5K-9090** | 2 | SEAL-O-RING | |
| | | 1 | **6V-9840** | 1 | TEE-SWIVEL | |

I-REFER TO HYDRAULIC INFORMATION SYSTEM

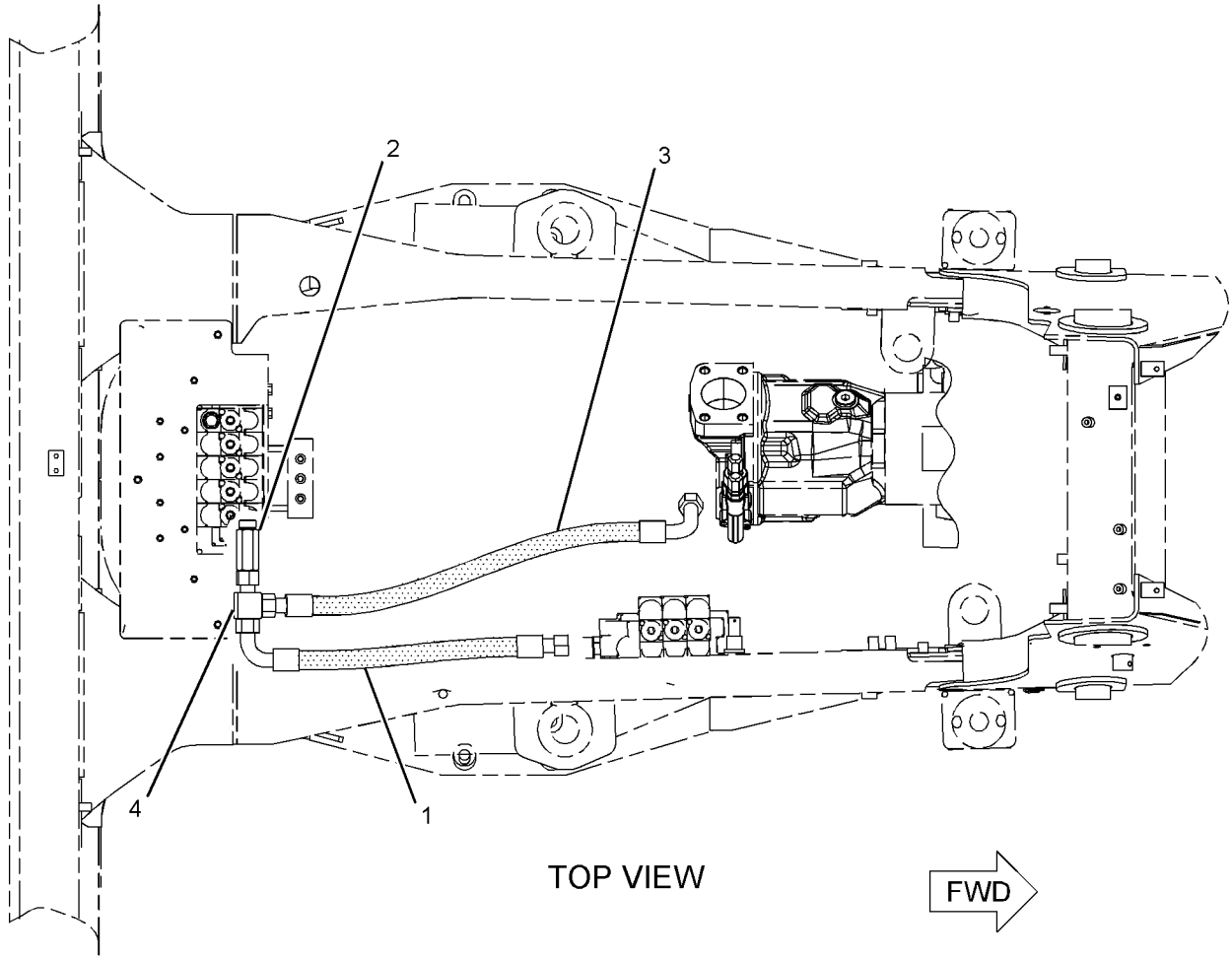


GRAPHIC #1 **<END>** g01035862

# HYDRAULIC SYSTEM

## *235-4799* LINES GP-RETURN

**S/N: BXC1-UP; DSX1-UP**

**PART OF 237-9297, 237-9298 HYDRAULIC AR**

**SMCS-5057** **i01980490**

| NOTE | REF NO | GRAPHIC REF | PART NUMBER | QTY | PART NAME 1 2 3 4 5 6 (PRODUCT LEVEL) | SEE PAGE |
|---|---|---|---|---|---|---|
| I | 1 | 1 | **6R-3299** | 1 | HOSE AS | |
| | 2 | 1 | *215-4424* | 1 | TEE AS | |
| | | 1 | **5K-9090** | 1 | SEAL-O-RING | |
| | | 1 | **6V-9746** | 1 | SEAL-O-RING | |
| | | 1 | **7M-8485** | 1 | SEAL-O-RING | |
| | | 1 | **211-3468** | 1 | TEE | |
| | 3 | 1 | *148-8429* | 1 | TEE AS | |
| | | 1 | **5K-9090** | 2 | SEAL-O-RING | |
| | | 1 | **6V-9840** | 1 | TEE-SWIVEL | |

I-REFER TO HYDRAULIC INFORMATION SYSTEM

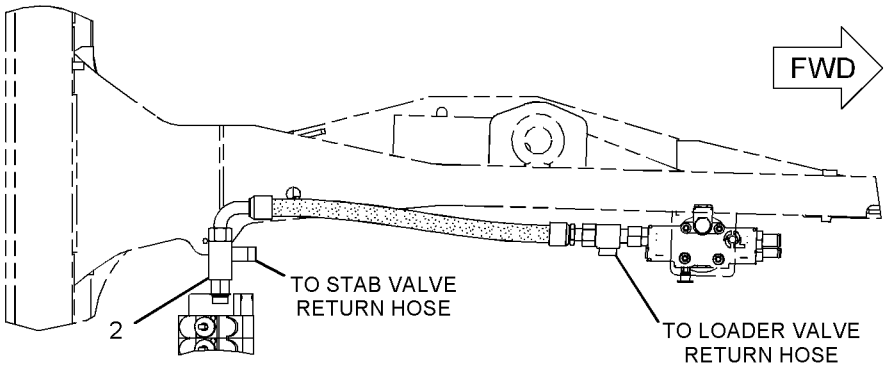


TOP VIEW

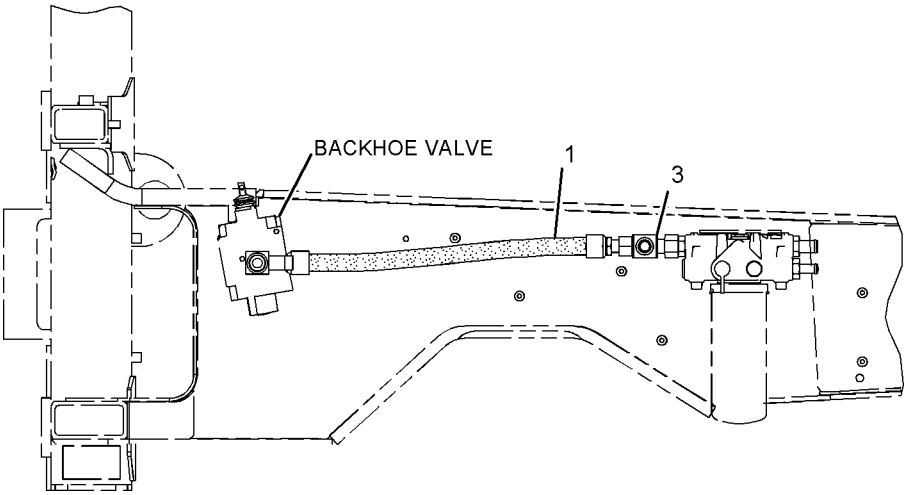


RIGHT SIDE VIEW

GRAPHIC #1 **<END>** g01028144

# HYDRAULIC SYSTEM

## *235-5861* LINES GP-RIDE CONTROL

**S/N: BXC1-UP; DSX1-UP**

**PART OF 239-9400, 239-9403, 239-9404, 239-9405, 239-9413 CONTROL AR-RIDE, 239-9410 KIT-RIDE CONTROL AN ATTACHMENT**

**SMCS-5057, 5077** **i02000632**

| NOTE | REF NO | GRAPHIC REF | PART NUMBER | QTY | PART NAME 1 2 3 4 5 6 (PRODUCT LEVEL) | SEE PAGE |
|---|---|---|---|---|---|---|
| | 1 | 1 | **3S-2093** | 1 | STRAP-CABLE | |
| | 2 | 1 | **7K-1181** | 1 | STRAP-CABLE | |
| Y | 3 | 1 | *162-3960* | 1 | ACCUMULATOR GP-RIDE CONTROL (CHARGED) | 346 |
| I | 4 | 1 | **167-7966** | 1 | HOSE AS | |
| I | 5 | 1 | **245-1728** | 1 | HOSE AS | |
| | 6 | 1 | **195-1289** | 1 | BRACKET AS | |
| | 7 | 1 | **195-1736** | 1 | TUBE AS | |
| | 8 | 1 | *222-1684* | 1 | VALVE GP-SOLENOID (RIDE CONTROL) | |
| | 9 | 1 | **224-0672** | 1 | FILM-WARNING (HIGH PRESSURE CYLINDER) | |
| | 10 | 1 | **231-7660** | 1 | HARNESS AS-RIDE CONTROL | |
| | | 1 | **102-8802** | 1 | KIT-RECEPTACLE (2-PIN) | |
| | | 1 | **155-2270** | 1 | KIT-CONNECTING PLUG (2-PIN) | |
| I | 11 | 1 | **237-0632** | 1 | HOSE AS | |
| | 12 | 1 | **109-1633** | 2 | CLIP (SLOT) | |
| | 13 | 1 | **109-1634** | 2 | CLIP (TAB) | |
| | 14 | 1 | *148-8346* | 1 | ELBOW GP | |
| | | 1 | **8T-1686** | 1 | ELBOW | |
| | | 1 | **3K-0360** | 1 | SEAL-O-RING | |
| | | 1 | **6V-8398** | 1 | SEAL-O-RING | |
| | 15 | 1 | *148-8364* | 1 | ELBOW AS | |
| | | 1 | **6V-8625** | 1 | ELBOW | |
| | | 1 | **3K-0360** | 1 | SEAL-O-RING | |
| | | 1 | **6V-8398** | 1 | SEAL-O-RING | |
| | 16 | 1 | *148-8390* | 2 | ELBOW GP | |
| | | | | | (EACH INCLUDES) | |
| | | 1 | **6V-8626** | 1 | ELBOW | |
| | | 1 | **2M-9780** | 1 | SEAL-O-RING | |
| | | 1 | **7J-9108** | 1 | SEAL-O-RING | |
| | 17 | 1 | *150-4043* | 1 | CONNECTOR GP | |
| | | 1 | **6V-9873** | 1 | CONNECTOR | |
| | | 1 | **3J-1907** | 1 | SEAL-O-RING | |
| | | 1 | **6V-8398** | 1 | SEAL-O-RING | |
| M | 18 | 1 | **5C-7261** | 2 | NUT (M8X1.25 THD) | |
| M | 19 | 1 | **7X-2538** | 2 | BOLT (M8X1.25X100MM) | |
| | 20 | 1 | **8T-4121** | 3 | WASHER-HARD (11X21X2.5MM THK) | |
| M | 21 | 1 | **8T-4137** | 3 | BOLT (M10X1.5X20MM) | |
| M | 22 | 1 | **8T-4139** | 2 | BOLT (M12X1.75X30MM) | |
| | 23 | 1 | **8T-4223** | 2 | WASHER-HARD (13.5X25.5X3MM THK) | |
| | 24 | 1 | **8T-4224** | 4 | WASHER-HARD (8.8X16X2MM THK) | |

I-REFER TO HYDRAULIC INFORMATION SYSTEM
M-METRIC PART
Y-SEPARATE ILLUSTRATION

*235-5861* **LINES GP-RIDE CONTROL** *(contd.)* **i02000632**

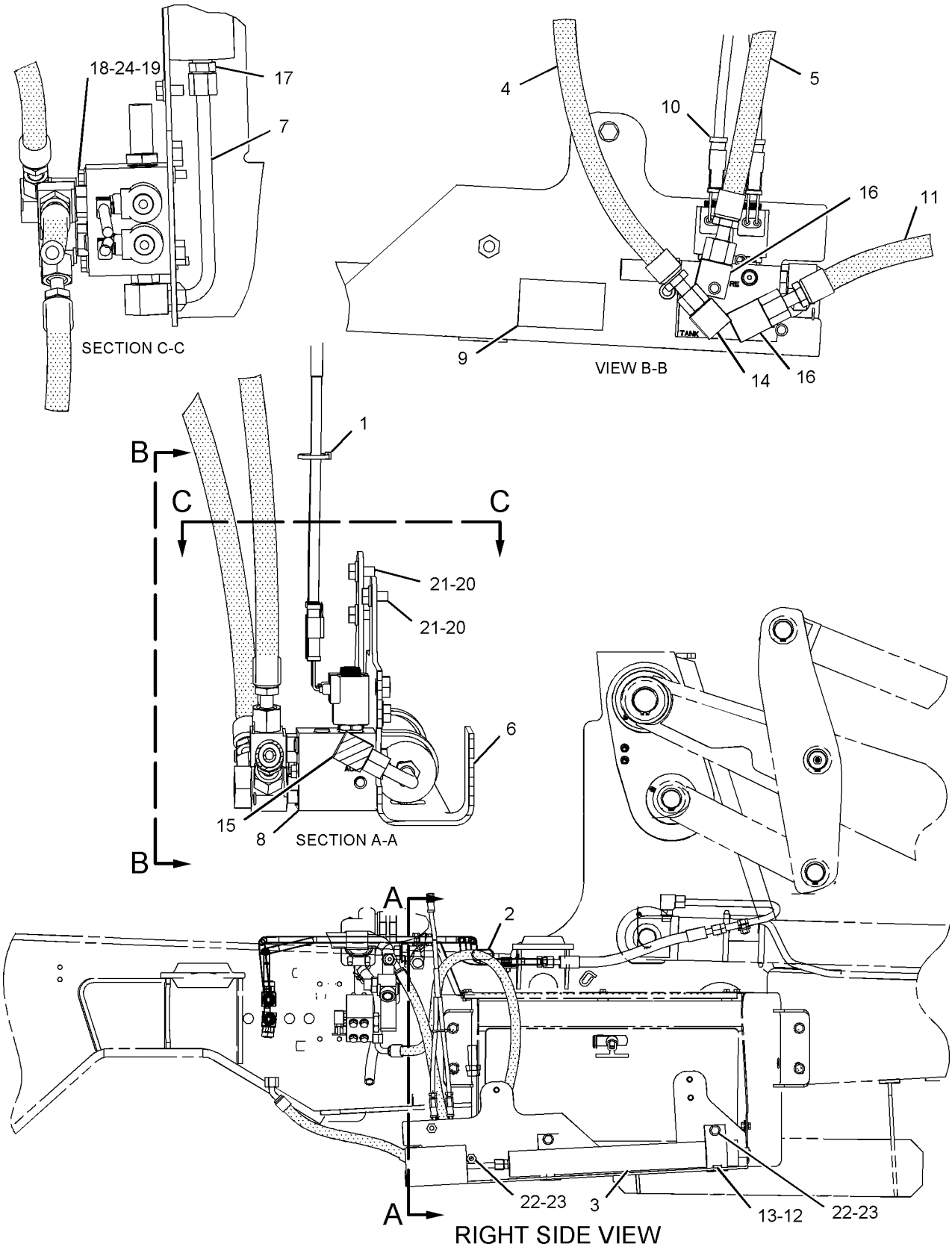


GRAPHIC #1 **<END>** g01032075

# HYDRAULIC SYSTEM

## *175-7618* LINES GP-SIDESHIFT LOCK—STANDARD FRAME

**S/N: BXC1-UP; DSX1-UP**

**PART OF 240-8490, 240-8491, 240-8492, 240-8493, 240-8689, 240-8690, 240-8691, 240-8692 BACKHOE AR-EXTENDABLE STICK, 240-8685, 240-8686, 240-8687, 240-8688 BACKHOE AR-STANDARD STICK AN ATTACHMENT**

**SMCS-5057, 5484** **i01499364**

| NOTE | REF NO | GRAPHIC REF | PART NUMBER | QTY | PART NAME 1 2 3 4 5 6 (PRODUCT LEVEL) | SEE PAGE |
|---|---|---|---|---|---|---|
| Y | 1 | 1 | **3E-8622** | 1 | VALVE GP-SOLENOID | 584 |
| | 2 | 1 | **9R-1975** | 1 | TUBE AS | |
| | 3 | 1 | **9R-1976** | 1 | TUBE AS | |
| | 4 | 1 | **9R-9208** | 1 | TUBE AS | |
| | 5 | 1 | **9R-9209** | 1 | TUBE AS | |
| | 6 | 1 | **107-6715** | 1 | TUBE AS | |
| | 7 | 1 | **168-8186** | 1 | HOSE AS | |
| | 8 | 1 | *148-8366* | 1 | ELBOW GP | |
| | | 1 | **6V-8397** | 2 | SEAL-O-RING | |
| | | 1 | **6V-8987** | 1 | ELBOW | |
| | 9 | 1 | *148-8378* | 2 | ELBOW GP | |
| | | | | | (EACH INCLUDES) | |
| | | 1 | **3J-1907** | 1 | SEAL-O-RING | |
| | | 1 | **6V-8397** | 1 | SEAL-O-RING | |
| | | 1 | **6V-8724** | 1 | ELBOW | |
| | 10 | 1 | *148-8439* | 2 | TEE GP | |
| | | | | | (EACH INCLUDES) | |
| | | 1 | **3J-1907** | 1 | SEAL-O-RING | |
| | | 1 | **6V-8397** | 2 | SEAL-O-RING | |
| | | 1 | **6V-8774** | 1 | TEE | |
| | 11 | 1 | *150-3056* | 1 | FITTING GP | |
| | | 1 | **6V-8397** | 3 | SEAL-O-RING | |
| | | 1 | **6V-8788** | 1 | TEE | |
| | 12 | 1 | *150-4044* | 1 | CONNECTOR GP | |
| | | 1 | **3J-1907** | 1 | SEAL-O-RING | |
| | | 1 | **6V-8397** | 1 | SEAL-O-RING | |
| | | 1 | **8T-1779** | 1 | CONNECTOR | |
| | 13 | 1 | **6V-9168** | 1 | NUT (11/16-16 THD) | |

Y-SEPARATE ILLUSTRATION

*175-7618* **LINES GP-SIDESHIFT LOCK** *(contd.)* **i01499364**

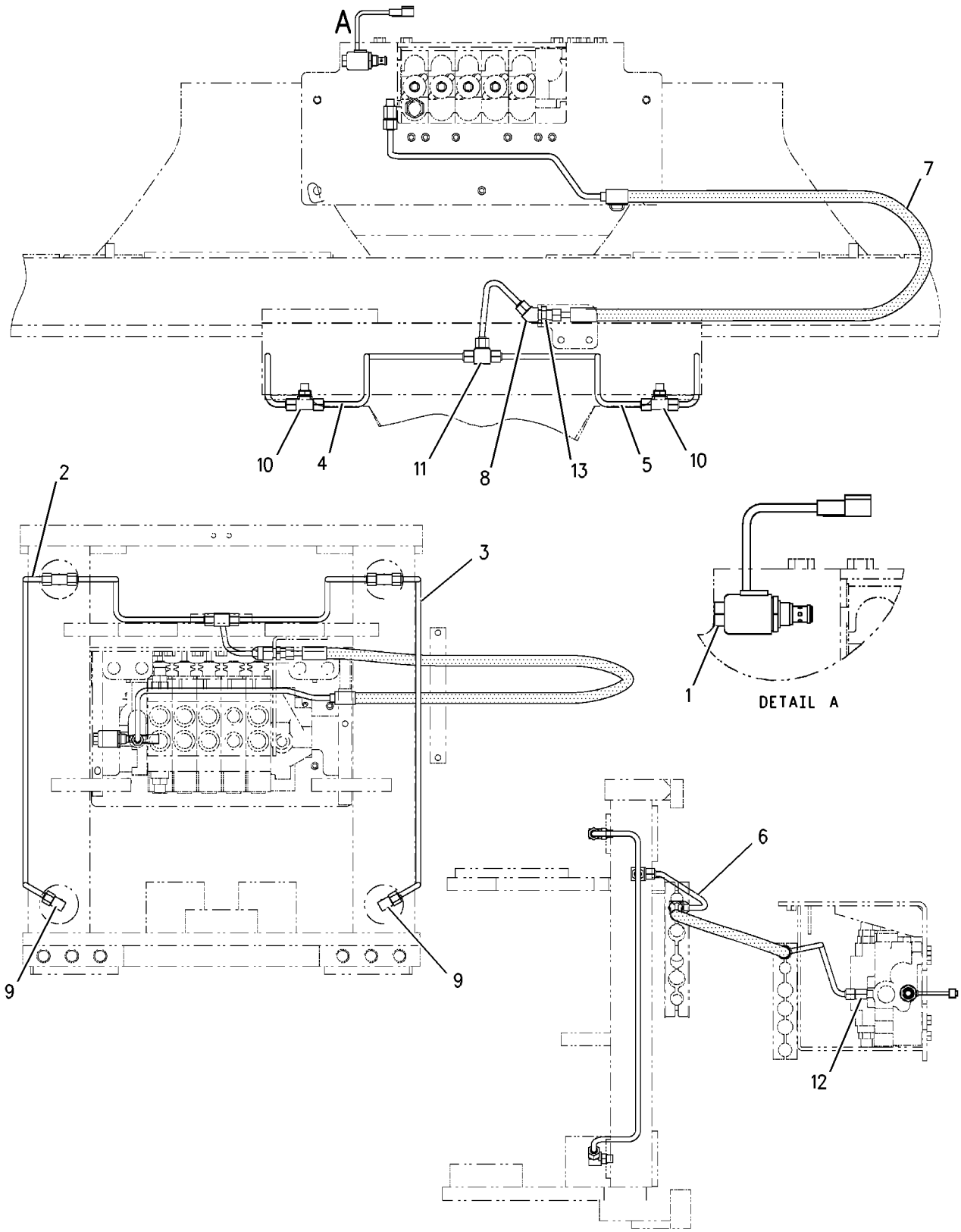


GRAPHIC #1 **<END>** g00726909

# HYDRAULIC SYSTEM

## *183-8523* LINES GP-SIDESHIFT LOCK—NARROW FRAME

**S/N: BXC1-UP; DSX1-UP**

**PART OF 240-8504, 240-8505, 240-8506, 240-8507, 240-8699, 240-8700, 240-8701, 240-8702 BACKHOE AR-EXTENDABLE STICK, 240-8695, 240-8696, 240-8697, 240-8698 BACKHOE AR-STANDARD STICK**

**AN ATTACHMENT**

**SMCS-5057, 5484** **i01378999**

| NOTE | REF NO | GRAPHIC REF | PART NUMBER | QTY | PART NAME 1 2 3 4 5 6 (PRODUCT LEVEL) | SEE PAGE |
|---|---|---|---|---|---|---|
| Y | 1 | 1 | **3E-8622** | 1 | VALVE GP-SOLENOID | 584 |
| | 2 | 1 | **9R-1975** | 1 | TUBE AS | |
| | 3 | 1 | **9R-1976** | 1 | TUBE AS | |
| | 4 | 1 | **9R-9208** | 1 | TUBE AS | |
| | 5 | 1 | **9R-9209** | 1 | TUBE AS | |
| | 6 | 1 | **107-6715** | 1 | TUBE AS | |
| | 7 | 1 | **183-8521** | 1 | HOSE AS | |
| | 8 | 1 | *148-8366* | 1 | ELBOW AS | |
| | | 1 | **6V-8397** | 2 | SEAL-O-RING (9.27MM ID) | |
| | | 1 | **6V-8987** | 1 | ELBOW-45 DEGREE | |
| | 9 | 1 | *148-8378* | 2 | ELBOW GP | |
| | | | | | (EACH INCLUDES) | |
| | | 1 | **3J-1907** | 1 | SEAL-O-RING (11.89MM ID) | |
| | | 1 | **6V-8397** | 1 | SEAL-O-RING (9.27MM ID) | |
| | | 1 | **6V-8724** | 1 | ELBOW | |
| | 10 | 1 | *148-8439* | 2 | TEE AS-ORFS | |
| | | | | | (EACH INCLUDES) | |
| | | 1 | **3J-1907** | 1 | SEAL-O-RING (11.89MM ID) | |
| | | 1 | **6V-8397** | 2 | SEAL-O-RING (9.27MM ID) | |
| | | 1 | **6V-8774** | 1 | TEE | |
| | 11 | 1 | *150-3056* | 1 | TEE AS | |
| | | 1 | **6V-8397** | 3 | SEAL-O-RING (9.27MM ID) | |
| | | 1 | **6V-8788** | 1 | TEE | |
| | 12 | 1 | *150-4044* | 1 | CONNECTOR AS | |
| | | 1 | **3J-1907** | 1 | SEAL-O-RING (11.89MM ID) | |
| | | 1 | **6V-8397** | 1 | SEAL-O-RING (9.27MM ID) | |
| | | 1 | **8T-1779** | 1 | CONNECTOR | |
| | 13 | 1 | **6V-9168** | 1 | NUT (11/16-16 THD) | |

Y-SEPARATE ILLUSTRATION

*183-8523* **LINES GP-SIDESHIFT LOCK** *(contd.)* **i01378999**

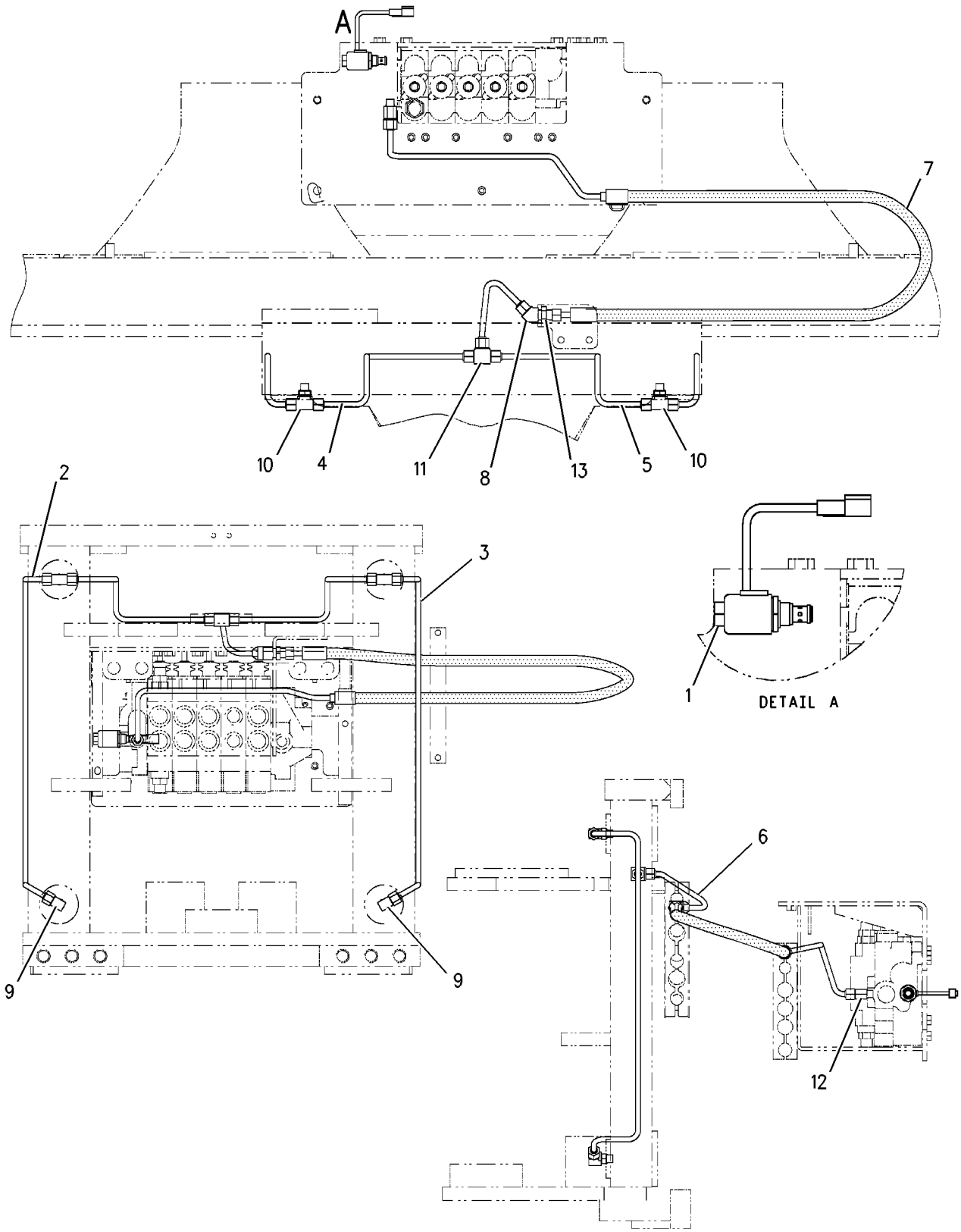


GRAPHIC #1 **<END>** g00726909

# HYDRAULIC SYSTEM

## *183-8530* LINES GP-SIDESHIFT LOCK—STANDARD FRAME

**S/N: BXC1-UP**
**4 BANK**
**PART OF 240-8683, 240-8684 BACKHOE AR-STANDARD STICK**
**AN ATTACHMENT**

**SMCS-5057, 5484** **i01376362**

| NOTE | REF NO | GRAPHIC REF | PART NUMBER | QTY | PART NAME 1 2 3 4 5 6 (PRODUCT LEVEL) | SEE PAGE |
|---|---|---|---|---|---|---|
| Y | 1 | 1 | **3E-8622** | 1 | VALVE GP-SOLENOID | 584 |
| | 2 | 1 | **9R-1975** | 1 | TUBE AS | |
| | 3 | 1 | **9R-1976** | 1 | TUBE AS | |
| | 4 | 1 | **9R-9208** | 1 | TUBE AS | |
| | 5 | 1 | **9R-9209** | 1 | TUBE AS | |
| | 6 | 1 | **107-6715** | 1 | TUBE AS | |
| | 7 | 1 | **183-8529** | 1 | HOSE AS | |
| | 8 | 1 | *148-8366* | 1 | ELBOW AS | |
| | | 1 | **6V-8397** | 2 | SEAL-O-RING (9.27MM ID) | |
| | | 1 | **6V-8987** | 1 | ELBOW-45 DEGREE | |
| | 9 | 1 | *148-8378* | 2 | ELBOW GP | |
| | | | | | (EACH INCLUDES) | |
| | | 1 | **3J-1907** | 1 | SEAL-O-RING (11.89MM ID) | |
| | | 1 | **6V-8397** | 1 | SEAL-O-RING (9.27MM ID) | |
| | | 1 | **6V-8724** | 1 | ELBOW | |
| | 10 | 1 | *148-8439* | 2 | TEE AS-ORFS | |
| | | | | | (EACH INCLUDES) | |
| | | 1 | **3J-1907** | 1 | SEAL-O-RING (11.89MM ID) | |
| | | 1 | **6V-8397** | 2 | SEAL-O-RING (9.27MM ID) | |
| | | 1 | **6V-8774** | 1 | TEE | |
| | 11 | 1 | *150-3056* | 1 | TEE AS | |
| | | 1 | **6V-8397** | 3 | SEAL-O-RING (9.27MM ID) | |
| | | 1 | **6V-8788** | 1 | TEE | |
| | 12 | 1 | *150-4044* | 1 | CONNECTOR AS | |
| | | 1 | **3J-1907** | 1 | SEAL-O-RING (11.89MM ID) | |
| | | 1 | **6V-8397** | 1 | SEAL-O-RING (9.27MM ID) | |
| | | 1 | **8T-1779** | 1 | CONNECTOR | |
| | 13 | 1 | **6V-9168** | 1 | NUT (11/16-16 THD) | |

Y-SEPARATE ILLUSTRATION

*183-8530* **LINES GP-SIDESHIFT LOCK** *(contd.)* **i01376362**

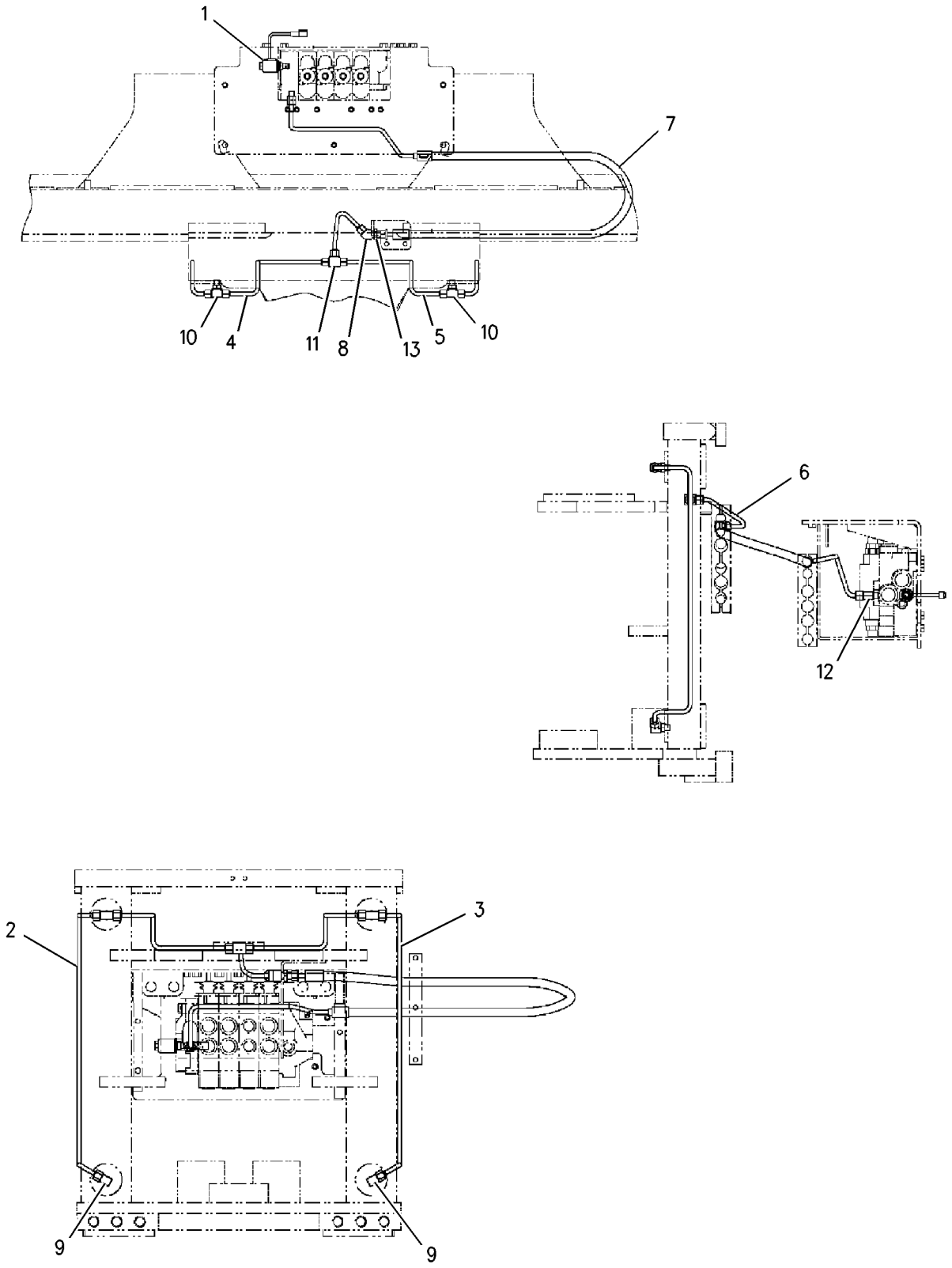


GRAPHIC #1 **<END>** g00727802

# HYDRAULIC SYSTEM

## *183-8532* LINES GP-SIDESHIFT LOCK—NARROW FRAME

**S/N: DSX1-UP**

**PART OF 240-8693, 240-8694 BACKHOE AR-STANDARD STICK**

**AN ATTACHMENT**

**SMCS-5057, 5484** **i01379036**

| NOTE | REF NO | GRAPHIC REF | PART NUMBER | QTY | PART NAME 1 2 3 4 5 6 (PRODUCT LEVEL) | SEE PAGE |
|---|---|---|---|---|---|---|
| Y | 1 | 1 | **3E-8622** | 1 | VALVE GP-SOLENOID | 584 |
| | 2 | 1 | **9R-1975** | 1 | TUBE AS | |
| | 3 | 1 | **9R-1976** | 1 | TUBE AS | |
| | 4 | 1 | **9R-9208** | 1 | TUBE AS | |
| | 5 | 1 | **9R-9209** | 1 | TUBE AS | |
| | 6 | 1 | **107-6715** | 1 | TUBE AS | |
| | 7 | 1 | **183-8531** | 1 | HOSE AS | |
| | 8 | 1 | *148-8366* | 1 | ELBOW AS | |
| | | 1 | **6V-8397** | 2 | SEAL-O-RING (9.27MM ID) | |
| | | 1 | **6V-8987** | 1 | ELBOW-45 DEGREE | |
| | 9 | 1 | *148-8378* | 2 | ELBOW GP | |
| | | | | | (EACH INCLUDES) | |
| | | 1 | **3J-1907** | 1 | SEAL-O-RING (11.89MM ID) | |
| | | 1 | **6V-8397** | 1 | SEAL-O-RING (9.27MM ID) | |
| | | 1 | **6V-8724** | 1 | ELBOW | |
| | 10 | 1 | *148-8439* | 2 | TEE AS-ORFS | |
| | | | | | (EACH INCLUDES) | |
| | | 1 | **3J-1907** | 1 | SEAL-O-RING (11.89MM ID) | |
| | | 1 | **6V-8397** | 2 | SEAL-O-RING (9.27MM ID) | |
| | | 1 | **6V-8774** | 1 | TEE | |
| | 11 | 1 | *150-3056* | 1 | TEE AS | |
| | | 1 | **6V-8397** | 3 | SEAL-O-RING (9.27MM ID) | |
| | | 1 | **6V-8788** | 1 | TEE | |
| | 12 | 1 | *150-4044* | 1 | CONNECTOR AS | |
| | | 1 | **3J-1907** | 1 | SEAL-O-RING (11.89MM ID) | |
| | | 1 | **6V-8397** | 1 | SEAL-O-RING (9.27MM ID) | |
| | | 1 | **8T-1779** | 1 | CONNECTOR | |
| | 13 | 1 | **6V-9168** | 1 | NUT (11/16-16 THD) | |

Y-SEPARATE ILLUSTRATION

*183-8532* **LINES GP-SIDESHIFT LOCK** *(contd.)* **i01379036**

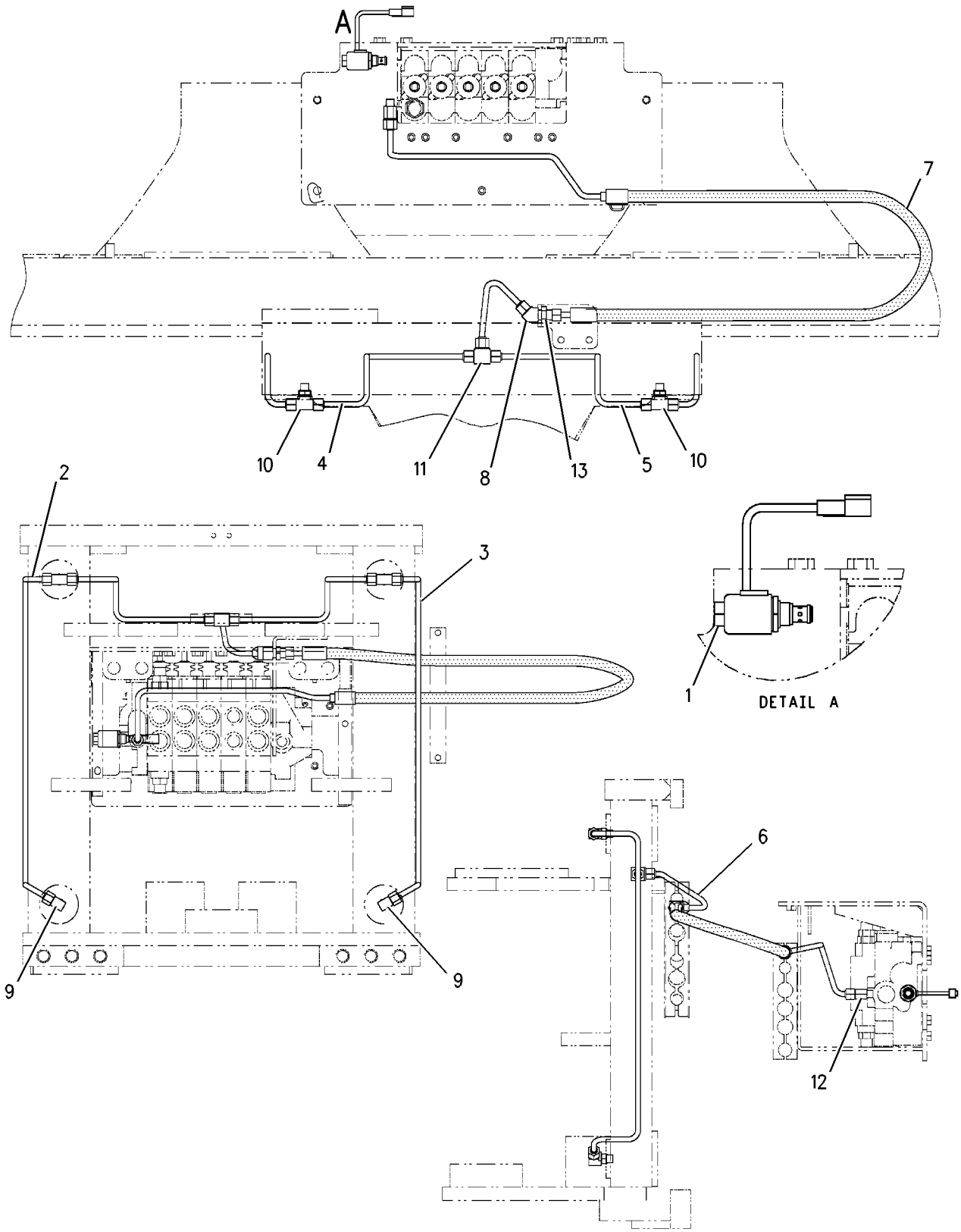


GRAPHIC #1 **<END>** g00726909

# HYDRAULIC SYSTEM

## *185-3414* LINES GP-STABILIZER

**S/N: BXC1-UP**

**PART OF 237-9297 HYDRAULIC AR**

**SMCS-5057, 5468** **i01703909**

| NOTE | REF NO | GRAPHIC REF | PART NUMBER | QTY | PART NAME 1 2 3 4 5 6 (PRODUCT LEVEL) | SEE PAGE |
|---|---|---|---|---|---|---|
| | 1 | 1 | **8Y-8674** | 1 | TUBE AS | |
| | 2 | 1 | **8Y-8675** | 1 | TUBE AS | |
| | 3 | 1 | **9M-6738** | 2 | CLAMP-HOSE | |
| | 4 | 1 | **9R-2004** | 2 | BLOCK | |
| | 5 | 1 | **174-4028** | 1 | TUBE AS | |
| | 6 | 1 | **174-4029** | 1 | TUBE AS | |
| | 7 | 1 | **174-4030** | 1 | TUBE AS | |
| | 8 | 1 | **174-4031** | 1 | TUBE AS | |
| | 9 | 1 | **174-4032** | 1 | TUBE AS | |
| | 10 | 1 | **174-4033** | 1 | TUBE AS | |
| | 11 | 1 | **174-4034** | 1 | TUBE AS | |
| | 12 | 1 | **174-4035** | 1 | TUBE AS | |
| I | 13 | 1 | **177-7094** | 1 | HOSE AS | |
| | 14 | 1 | **195-0355** | 1 | TUBE AS | |
| | 15 | 1 | **195-0356** | 1 | TUBE AS | |
| | 16 | 1 | **195-0357** | 1 | TUBE AS | |
| | 17 | 1 | **195-0358** | 1 | TUBE AS | |
| I | 18 | 1 | **197-8444** | 1 | HOSE AS | |
| | 19 | 1 | *148-8327* | 1 | CONNECTOR GP | |
| | | 1 | **3D-2824** | 1 | SEAL-O-RING | |
| | | 1 | **6V-8637** | 1 | CONNECTOR-SEAL | |
| | | 1 | **6V-9746** | 1 | SEAL-O-RING | |
| | 20 | 1 | *148-8336* | 2 | CONNECTOR GP | |
| | | | | | (EACH INCLUDES) | |
| | | 1 | **3J-1907** | 1 | SEAL-O-RING | |
| | | 1 | **6V-8397** | 1 | SEAL-O-RING | |
| | | 1 | **6V-8636** | 1 | CONNECTOR | |
| | 21 | 1 | *148-8345* | 6 | CONNECTOR GP | |
| | | | | | (EACH INCLUDES) | |
| | | 1 | **2M-9780** | 1 | SEAL-O-RING | |
| | | 1 | **6V-8398** | 1 | SEAL-O-RING | |
| | | 1 | **6V-8638** | 1 | CONNECTOR-SEAL | |
| | 22 | 1 | *148-8347* | 1 | ELBOW GP | |
| | | 1 | **3D-2824** | 1 | SEAL-O-RING | |
| | | 1 | **6V-9007** | 1 | ELBOW | |
| | | 1 | **6V-9746** | 1 | SEAL-O-RING | |
| | 23 | 1 | **6V-0826** | 4 | GROMMET | |
| | 24 | 1 | **6V-8398** | 10 | SEAL-O-RING | |
| | 25 | 1 | **8T-1889** | 4 | CLIP (SLOT) | |
| | 26 | 1 | **8T-1890** | 4 | CLIP (TAB) | |
| | 27 | 1 | **8T-4121** | 8 | WASHER-HARD (11X21X2.5MM THK) | |
| M | 28 | 1 | **8T-4137** | 8 | BOLT (M10X1.5X20MM) | |
| | 29 | 1 | **9R-9289** | 8 | CLIP (SLOT) | |
| | 30 | 1 | **9R-9290** | 4 | CLIP (TAB) | |

I-SEE HOSE FABRICATION GUIDE
M-METRIC PART

*185-3414* **LINES GP-STABILIZER** *(contd.)* **i01703909**

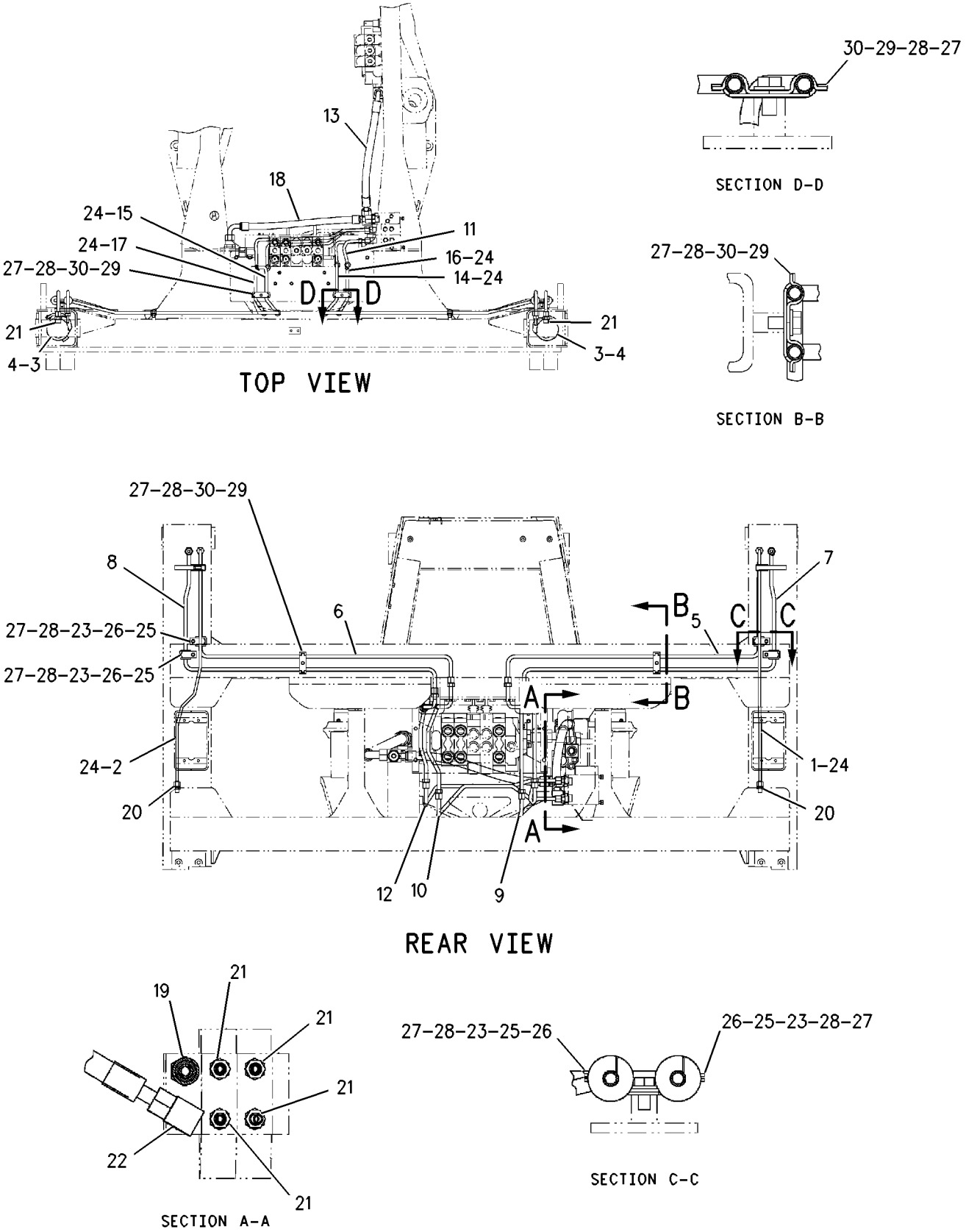


GRAPHIC #1 **<END>** g00877273

# HYDRAULIC SYSTEM

## *185-9751* LINES GP-STABILIZER

**S/N: DSX1-UP**

**PART OF 237-9298 HYDRAULIC AR**

**SMCS-5057, 5468** **i01987994**

| NOTE | REF NO | GRAPHIC REF | PART NUMBER | QTY | PART NAME 1 2 3 4 5 6 (PRODUCT LEVEL) | SEE PAGE |
|---|---|---|---|---|---|---|
| | 1 | 1 | **8Y-8674** | 1 | TUBE AS | |
| | 2 | 1 | **8Y-8675** | 1 | TUBE AS | |
| | 3 | 1 | **9M-6738** | 2 | CLAMP-HOSE | |
| | 4 | 1 | **9R-2004** | 2 | BLOCK | |
| I | 5 | 1 | **177-7094** | 1 | HOSE AS | |
| | 6 | 1 | **185-2173** | 1 | TUBE AS | |
| | 7 | 1 | **185-2175** | 1 | TUBE AS | |
| | 8 | 1 | **185-2176** | 1 | TUBE AS | |
| | 9 | 1 | **185-2183** | 1 | TUBE AS | |
| | 10 | 1 | **195-0355** | 1 | TUBE AS | |
| | 11 | 1 | **195-0356** | 1 | TUBE AS | |
| | 12 | 1 | **195-0357** | 1 | TUBE AS | |
| | 13 | 1 | **195-0358** | 1 | TUBE AS | |
| I | 14 | 1 | **197-8444** | 1 | HOSE AS | |
| C | 15 | 1 | **234-1532** | 1 | TUBE AS | |
| C | 16 | 1 | **234-1533** | 1 | TUBE AS | |
| C | 17 | 1 | **234-1534** | 1 | TUBE AS | |
| C | 18 | 1 | **234-1535** | 1 | TUBE AS | |
| | 19 | 1 | *148-8327* | 1 | CONNECTOR AS | |
| | | 1 | **3D-2824** | 1 | SEAL-O-RING | |
| | | 1 | **6V-8637** | 1 | CONNECTOR | |
| | | 1 | **6V-9746** | 1 | SEAL-O-RING | |
| | 20 | 1 | *148-8336* | 2 | CONNECTOR AS | |
| | | | | | (EACH INCLUDES) | |
| | | 1 | **3J-1907** | 1 | SEAL-O-RING | |
| | | 1 | **6V-8397** | 1 | SEAL-O-RING | |
| | | 1 | **6V-8636** | 1 | CONNECTOR | |
| | 21 | 1 | *148-8345* | 6 | CONNECTOR GP | |
| | | | | | (EACH INCLUDES) | |
| | | 1 | **2M-9780** | 1 | SEAL-O-RING | |
| | | 1 | **6V-8398** | 1 | SEAL-O-RING | |
| | | 1 | **6V-8638** | 1 | CONNECTOR | |
| | 22 | 1 | *148-8347* | 1 | ELBOW GP | |
| | | 1 | **3D-2824** | 1 | SEAL-O-RING | |
| | | 1 | **6V-9007** | 1 | ELBOW | |
| | | 1 | **6V-9746** | 1 | SEAL-O-RING | |
| | 23 | 1 | **6V-0826** | 4 | GROMMET | |
| | 24 | 1 | **6V-8398** | 10 | SEAL-O-RING | |
| | 25 | 1 | **8T-1889** | 4 | CLIP (SLOT) | |
| | 26 | 1 | **8T-1890** | 4 | CLIP (TAB) | |
| | 27 | 1 | **8T-4121** | 8 | WASHER-HARD (11X21X2.5MM THK) | |
| M | 28 | 1 | **8T-4137** | 8 | BOLT (M10X1.5X20MM) | |
| | 29 | 1 | **9R-9289** | 8 | CLIP (SLOT) | |
| | 30 | 1 | **9R-9290** | 4 | CLIP (TAB) | |

C-CHANGE FROM PREVIOUS TYPE
I-REFER TO HYDRAULIC INFORMATION SYSTEM
M-METRIC PART

*185-9751* **LINES GP-STABILIZER** *(contd.)* **i01987994**

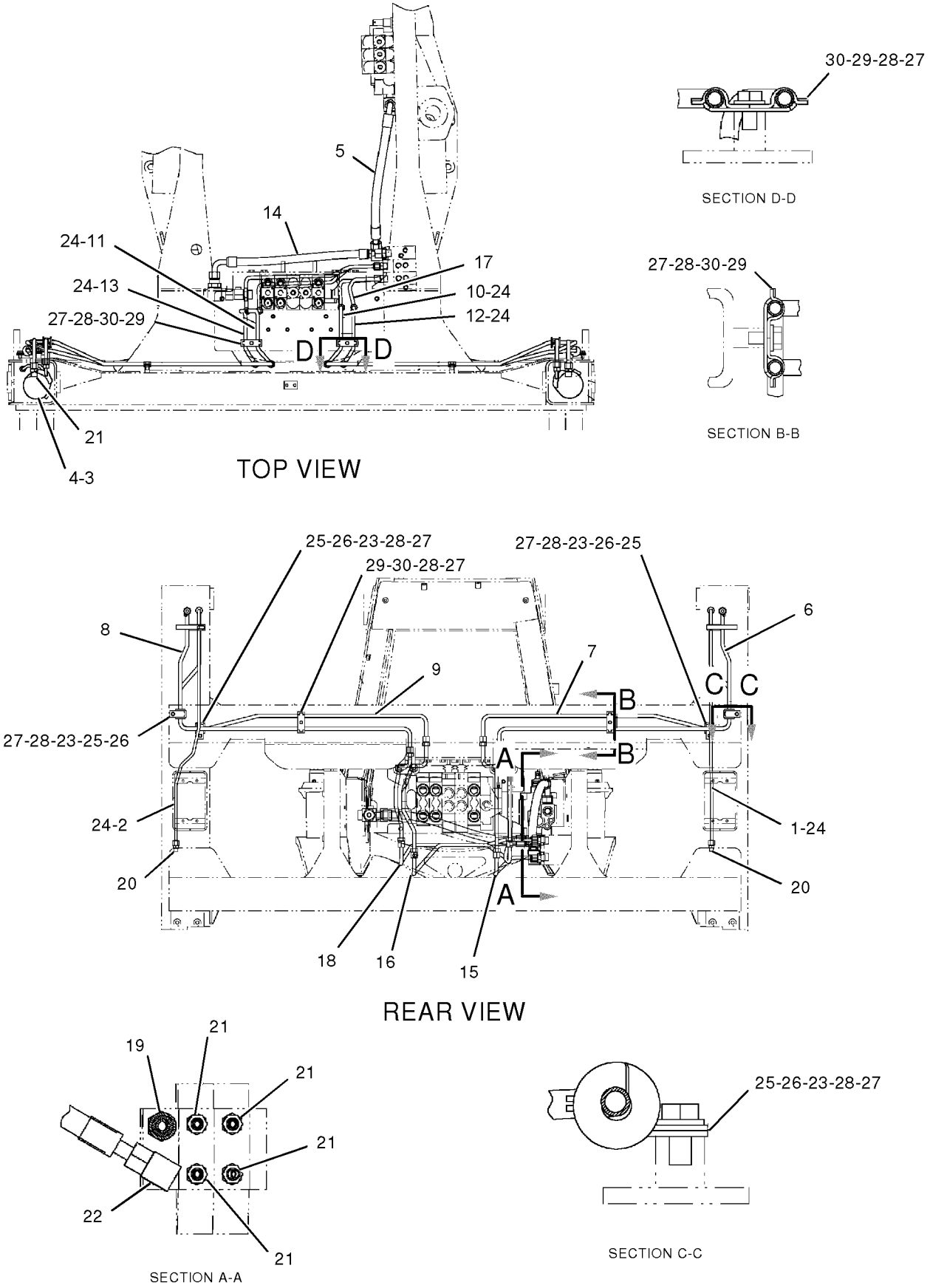


GRAPHIC #1 **<END>** g01029868

# HYDRAULIC SYSTEM

## *183-8544* LINES GP-STICK

**S/N: BXC1-UP; DSX1-UP**

**PART OF 240-8490, 240-8492, 240-8504, 240-8505, 240-8689, 240-8691, 240-8699, 240-8701 BACKHOE AR-EXTENDABLE STICK, 240-8683, 240-8685, 240-8687, 240-8693, 240-8695, 240-8697 BACKHOE AR-STANDARD STICK**

**AN ATTACHMENT**

**SMCS-5057, 5458** **i01943283**

| NOTE | REF NO | GRAPHIC REF | PART NUMBER | QTY | PART NAME 1 2 3 4 5 6 (PRODUCT LEVEL) | SEE PAGE |
|---|---|---|---|---|---|---|
| | 1 | 1 | **5P-0599** | 1 | CLAMP | |
| I | 2 | 1 | **9R-9210** | 1 | HOSE AS | |
| I | 3 | 1 | **9R-9211** | 1 | HOSE AS | |
| | 4 | 1 | **9R-5948** | 1 | BLOCK | |
| | 5 | 1 | *148-8341* | 1 | CONNECTOR GP | |
| | | 1 | **3D-2824** | 1 | SEAL-O-RING | |
| | | 1 | **6V-8713** | 1 | CONNECTOR | |
| | | 1 | **7J-9108** | 1 | SEAL-O-RING | |

I-SEE HOSE FABRICATION GUIDE

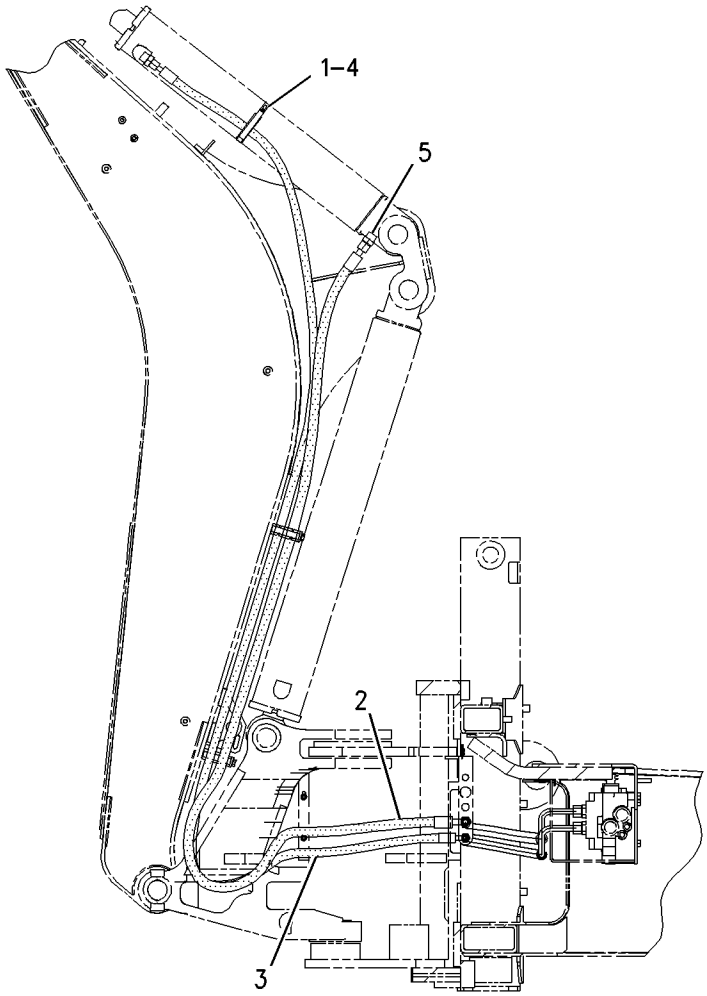


GRAPHIC #1 **<END>** g00842643

# HYDRAULIC SYSTEM

## *183-8547* LINES GP-STICK—EXTENSION

**S/N: BXC1-UP; DSX1-UP**

**PART OF 240-8492, 240-8493, 240-8505, 240-8507, 240-8691, 240-8692, 240-8701, 240-8702 BACKHOE AR-EXTENDABLE STICK AN ATTACHMENT**

**SMCS-5057, 5458** **i01943280**

| NOTE | REF NO | GRAPHIC REF | PART NUMBER | QTY | PART NAME 1 2 3 4 5 6 (PRODUCT LEVEL) | SEE PAGE |
|---|---|---|---|---|---|---|
| | 1 | 1 | **5P-0599** | 1 | CLAMP | |
| | 2 | 1 | **9R-5948** | 1 | BLOCK | |
| I | 3 | 1 | **9R-9218** | 1 | HOSE AS | |
| I | 4 | 1 | **9R-9221** | 1 | HOSE AS | |
| | 5 | 2 | **9R-9253** | 1 | PLATE | |
| I | 6 | 1 | **9R-9926** | 1 | HOSE AS | |
| | 7 | 1,2 | **101-0862** | 2 | PLATE-WARNING (E-STICK) | |
| | 8 | 2 | **106-0844** | 1 | TUBE AS | |
| | 9 | 1 | **162-2356** | 2 | TUBE AS | |
| I | 10 | 1 | **167-3896** | 2 | HOSE AS | |
| I | 11 | 2 | **173-9718** | 1 | HOSE AS | |
| I | 12 | 1 | **173-9719** | 1 | HOSE AS | |
| | 13 | 2 | **187-4333** | 1 | TUBE AS | |
| | 14 | 2 | **187-4344** | 1 | TUBE AS | |
| | 15 | 1 | *148-8347* | 1 | ELBOW GP | |
| | | 1 | **3D-2824** | 1 | SEAL-O-RING | |
| | | 1 | **6V-9007** | 1 | ELBOW | |
| | | 1 | **6V-9746** | 1 | SEAL-O-RING | |
| | 16 | 2 | **2P-1293** | 1 | LOCKNUT | |
| | 17 | 1,2 | **5P-7464** | 5 | CLIP (SLOT) | |
| | 18 | 1,2 | **5P-7465** | 5 | CLIP (TAB) | |
| | 19 | 2 | **5P-7466** | 2 | CLIP (SLOT) | |
| | 20 | 2 | **5P-7467** | 2 | CLIP (TAB) | |
| | 21 | 2 | **5P-7468** | 1 | CLIP (SLOT) | |
| | 22 | 2 | **5P-7469** | 1 | CLIP (TAB) | |
| | 23 | 2 | **5P-8112** | 2 | GROMMET | |
| | 24 | 1,2 | **6V-1249** | 5 | GROMMET | |
| | 25 | 1,2 | **6V-8398** | 6 | SEAL-O-RING | |
| | 26 | 2 | **6V-9169** | 1 | NUT-BULKHEAD (13/16-16 THD) | |
| | 27 | 2 | **6V-9746** | 2 | SEAL-O-RING | |
| | 28 | 1 | **7J-9108** | 2 | SEAL-O-RING | |
| | 29 | 2 | **8T-1889** | 1 | CLIP (SLOT) | |
| | 30 | 2 | **8T-1890** | 1 | CLIP (TAB) | |
| | 31 | 1,2 | **8T-4121** | 7 | WASHER-HARD (11X21X2.5MM THK) | |
| M | 32 | 1,2 | **8T-4136** | 3 | BOLT (M10X1.5X25MM) | |
| M | 33 | 1,2 | **8T-4139** | 4 | BOLT (M12X1.75X30MM) | |
| M | 34 | 1,2 | **8T-4184** | 2 | BOLT (M12X1.75X45MM) | |
| M | 35 | 1,2 | **8T-4195** | 4 | BOLT (M10X1.5X30MM) | |
| | 36 | 1,2 | **8T-4223** | 6 | WASHER-HARD (13.5X25.5X3MM THK) | |
| | 37 | 2 | **8T-7087** | 1 | GROMMET | |
| | 38 | 1,2 | **9R-1004** | 4 | CLIP (TAB) | |
| | 39 | 1,2 | **9R-1005** | 4 | CLIP (SLOT) | |
| | 40 | 2 | **233-9454** | 1 | SET-LOCKWASHER | |

I-SEE HOSE FABRICATION GUIDE
M-METRIC PART

*183-8547* **LINES GP-STICK** *(contd.)* **i01943280**

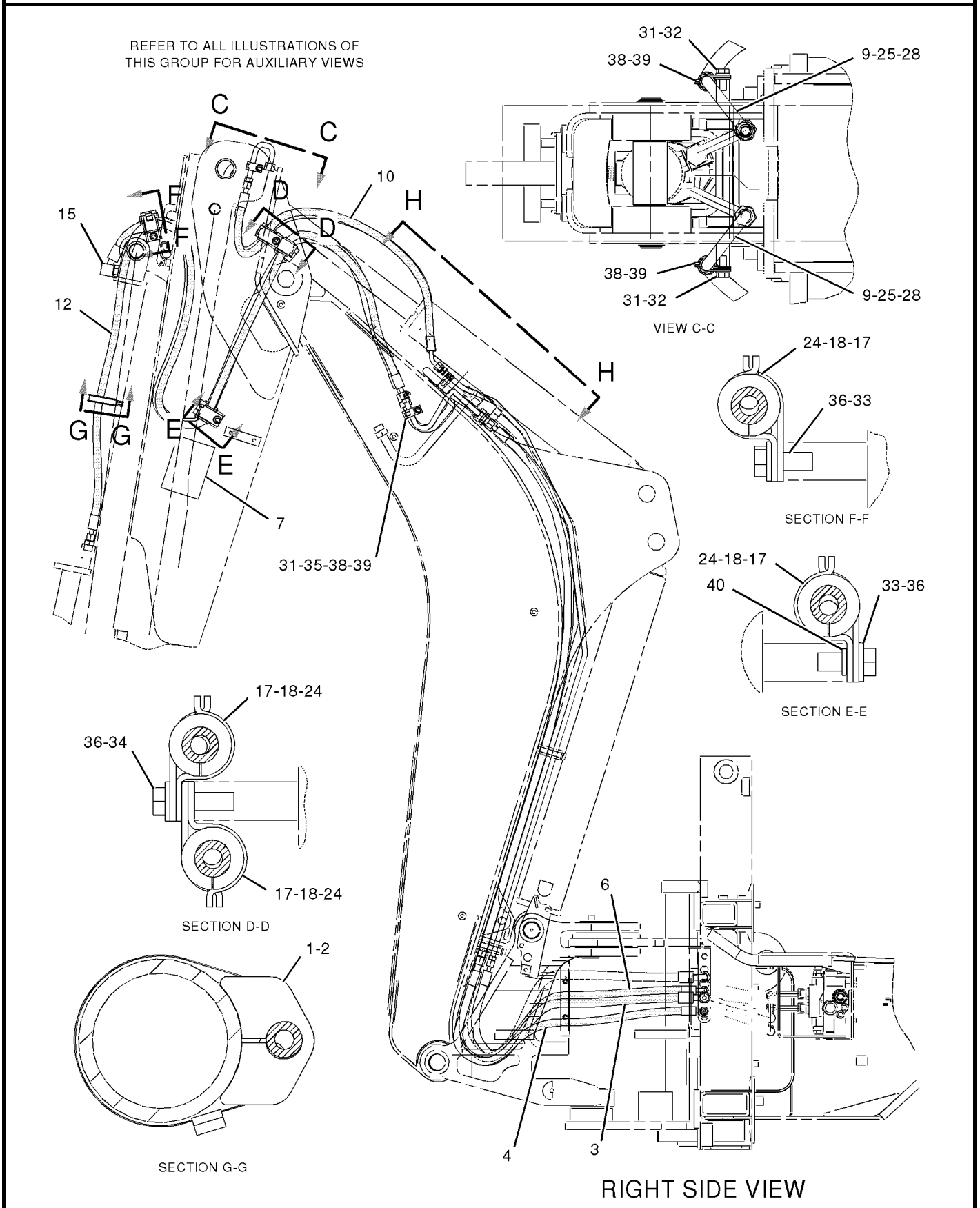


GRAPHIC #1 g01022274

*183-8547* **LINES GP-STICK** *(contd.)* **i01943280**

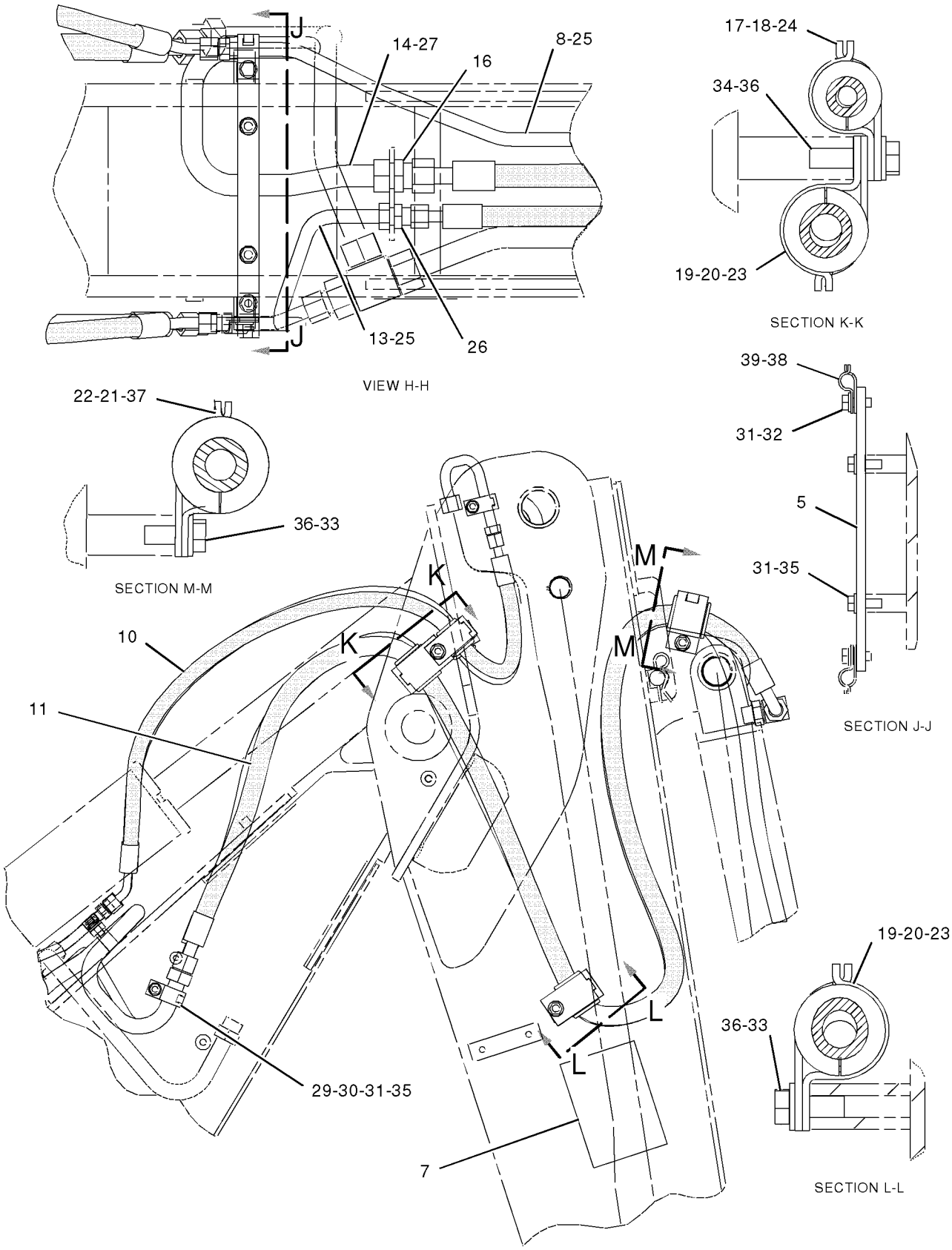


LEFT SIDE VIEW

GRAPHIC #2 **<END>** g01021039

# HYDRAULIC SYSTEM

## *183-8548* LINES GP-STICK–EXTENSION

**S/N: BXC1-UP; DSX1-UP**

**PART OF 240-8490, 240-8491, 240-8504, 240-8506, 240-8689, 240-8690, 240-8699, 240-8700 BACKHOE AR-EXTENDABLE STICK AN ATTACHMENT**

**SMCS-5057, 5458** **i02000912**

| NOTE | REF NO | GRAPHIC REF | PART NUMBER | QTY | PART NAME 1 2 3 4 5 6 (PRODUCT LEVEL) | SEE PAGE |
|---|---|---|---|---|---|---|
| | 1 | 1 | **5P-0599** | 1 | CLAMP | |
| | 2 | 1 | **9R-5948** | 1 | BLOCK | |
| I | 3 | 1 | **9R-9218** | 1 | HOSE AS | |
| I | 4 | 1 | **9R-9221** | 1 | HOSE AS | |
| | 5 | 2 | **9R-9253** | 1 | PLATE | |
| I | 6 | 1 | **9R-9926** | 2 | HOSE AS | |
| | 7 | 1 | **101-0862** | 2 | PLATE-WARNING (E-STICK) | |
| | 8 | 2 | **106-0844** | 1 | TUBE AS | |
| I | 9 | 1 | **107-6717** | 1 | HOSE AS | |
| | 10 | 1 | **107-6718** | 1 | TUBE AS | |
| | 11 | 2 | **107-6719** | 1 | TUBE AS | |
| | 12 | 1,2 | **162-2356** | 2 | TUBE AS | |
| I | 13 | 1,2 | **167-3896** | 2 | HOSE AS | |
| CI | 14 | 2 | **168-8497** | 1 | HOSE AS | |
| CI | 15 | 1 | **168-8644** | 1 | HOSE AS | |
| | 16 | 2 | **187-4333** | 1 | TUBE AS | |
| | 17 | 2 | **187-4344** | 1 | TUBE AS | |
| | 18 | 1 | *148-8347* | 1 | ELBOW GP | |
| | | 1 | **3D-2824** | 1 | SEAL-O-RING | |
| | | 1 | **6V-9007** | 1 | ELBOW | |
| | | 1 | **6V-9746** | 1 | SEAL-O-RING | |
| | 19 | 2 | *150-3057* | 1 | TEE AS | |
| | | 2 | **5K-9090** | 3 | SEAL-O-RING | |
| | | 2 | **6V-8792** | 1 | TEE-FACE SEAL | |
| | 20 | 2 | *150-3071* | 1 | REDUCER AS | |
| | | 2 | **6V-8945** | 1 | REDUCER-O-RING | |
| | | 2 | **7J-9108** | 1 | SEAL-O-RING | |
| | 21 | 2 | **2P-1293** | 1 | LOCKNUT (1 3/16-12 THD) | |
| | 22 | 1,2 | **5P-7464** | 5 | CLIP (SLOT) | |
| | 23 | 1,2 | **5P-7465** | 5 | CLIP (TAB) | |
| | 24 | 2 | **5P-7466** | 2 | CLIP (SLOT) | |
| | 25 | 2 | **5P-7467** | 2 | CLIP (TAB) | |
| | 26 | 2 | **5P-7468** | 1 | CLIP (SLOT) | |
| | 27 | 2 | **5P-7469** | 1 | CLIP (TAB) | |
| | 28 | 2 | **5P-8112** | 2 | GROMMET | |
| | 29 | 1,2 | **6V-1249** | 5 | GROMMET | |
| | 30 | 1,2 | **6V-8398** | 7 | SEAL-O-RING | |
| | 31 | 2 | **6V-9169** | 1 | NUT-BULKHEAD (13/16-16 THD) | |
| | 32 | 1,2 | **6V-9746** | 3 | SEAL-O-RING | |
| | 33 | 1,2 | **6V-9833** | 2 | CAP AS | |
| | 34 | 1,2 | **7J-9108** | 2 | SEAL-O-RING | |
| | 35 | 2 | **8T-1889** | 1 | CLIP (SLOT) | |
| | 36 | 2 | **8T-1890** | 1 | CLIP (TAB) | |
| C | 37 | 1,2 | **8T-4121** | 8 | WASHER-HARD (11X21X2.5MM THK) | |
| CM | 38 | 1,2 | **8T-4136** | 4 | BOLT (M10X1.5X25MM) | |
| M | 39 | 1,2 | **8T-4139** | 5 | BOLT (M12X1.75X30MM) | |
| M | 40 | 1 | **8T-4184** | 2 | BOLT (M12X1.75X45MM) | |
| M | 41 | 1,2 | **8T-4195** | 4 | BOLT (M10X1.5X30MM) | |
| | 42 | 1,2 | **8T-4223** | 8 | WASHER-HARD (13.5X25.5X3MM THK) | |
| | 43 | 2 | **8T-7087** | 1 | GROMMET | |
| | 44 | 1,2 | **9R-1004** | 5 | CLIP (TAB) | |
| | 45 | 1,2 | **9R-1005** | 5 | CLIP (SLOT) | |
| | 46 | 2 | **9X-6579** | 1 | NUT-ORIFICE (7/16-12 THD) | |

*183-8548* **LINES GP-STICK** ***(contd. )*** **i02000912**

C-CHANGE FROM PREVIOUS TYPE
I-REFER TO HYDRAULIC INFORMATION SYSTEM
M-METRIC PART

*183-8548* **LINES GP-STICK** *(contd.)* **i02000912**

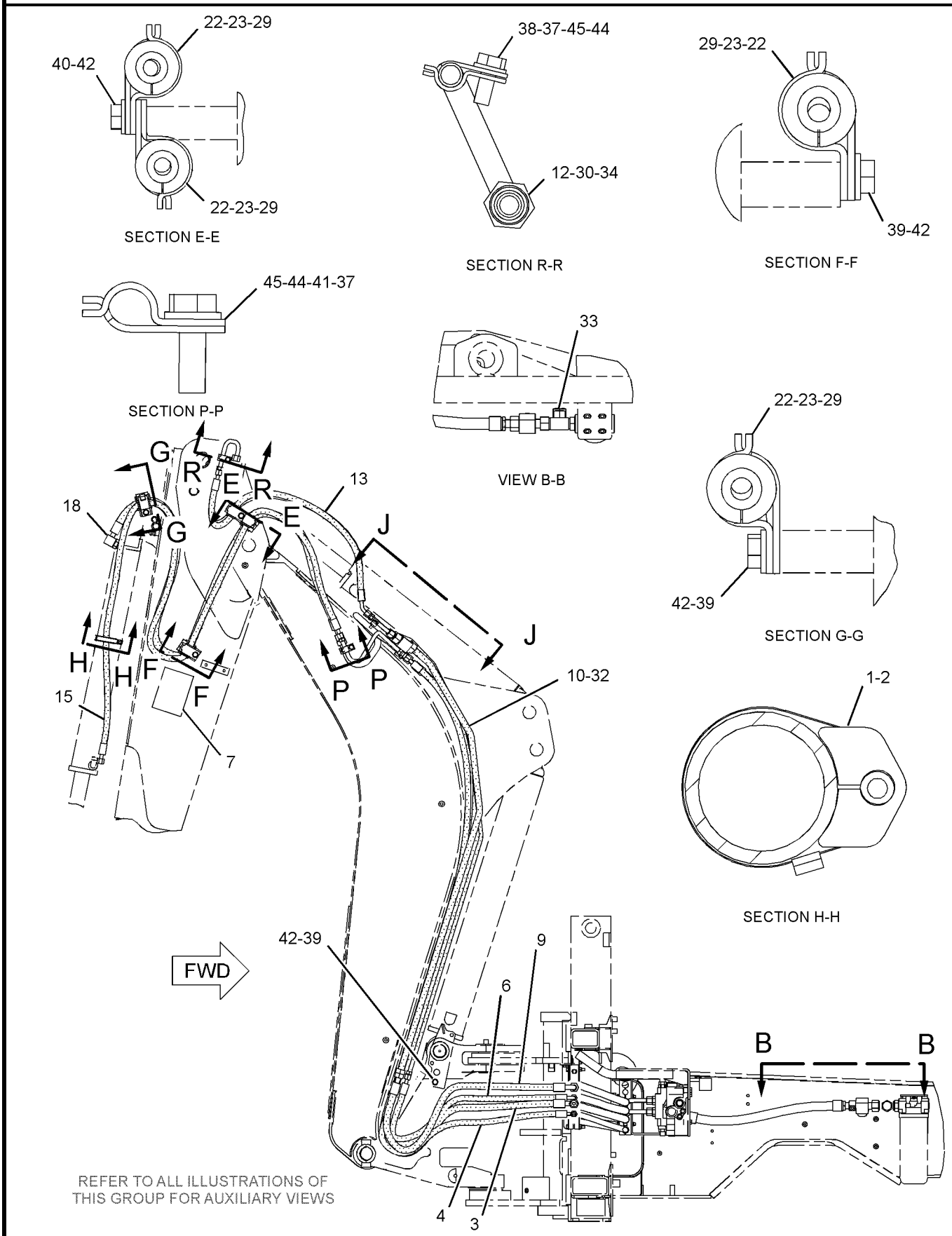


GRAPHIC #1 g01037166

*183-8548* **LINES GP-STICK** *(contd. )* **i02000912**

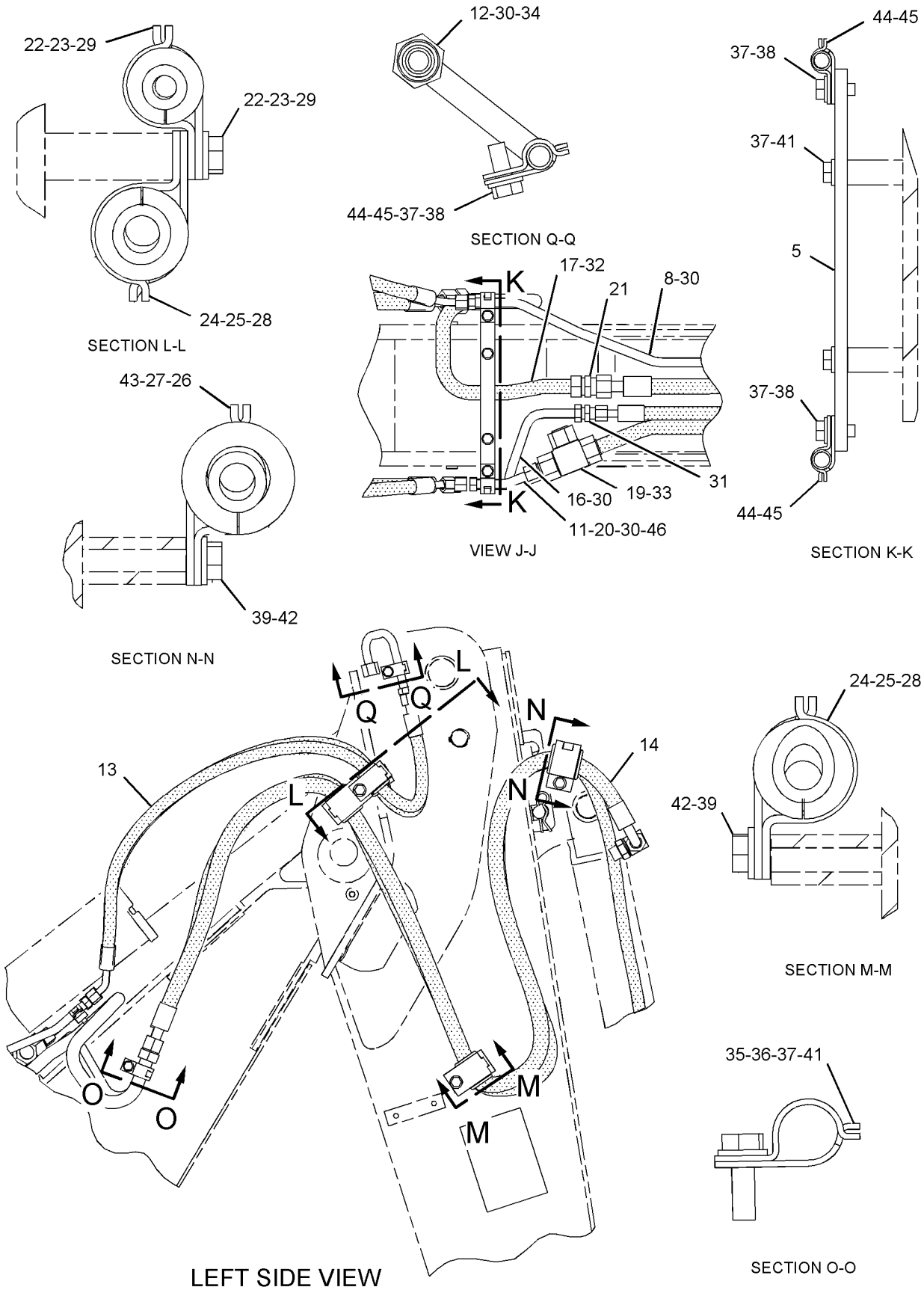


GRAPHIC #2 **<END>** g01037167

# HYDRAULIC SYSTEM

## *183-8505* LINES GP-SWING—STANDARD FRAME

**S/N: BXC1-UP; DSX1-UP**
**PART OF 202-6122 HYDRAULIC AR**
**AN ATTACHMENT**

**SMCS-5057, 5105** **i01657696**

| NOTE | REF NO | GRAPHIC REF | PART NUMBER | QTY | PART NAME 1 2 3 4 5 6 (PRODUCT LEVEL) | SEE PAGE |
|---|---|---|---|---|---|---|
| | 1 | 1 | **5P-0599** | 2 | CLAMP | |
| | 2 | 1 | **9R-2053** | 2 | BLOCK | |
| I | 3 | 1 | **107-6699** | 2 | HOSE AS | |
| | 4 | 1 | **109-1583** | 1 | TUBE AS | |
| | 5 | 1 | **176-0585** | 1 | TUBE AS | |
| | 6 | 1 | **183-8496** | 1 | HOSE AS | |
| | 7 | 1 | **183-8498** | 1 | HOSE AS | |
| I | 8 | 1 | **196-8438** | 1 | HOSE AS | |
| I | 9 | 1 | **196-8439** | 1 | HOSE AS | |
| | 10 | 1 | *148-8342* | 2 | CONNECTOR GP | |
| | | | | | (EACH INCLUDES) | |
| | | 1 | **3K-0360** | 1 | SEAL-O-RING | |
| | | 1 | **6V-8632** | 1 | CONNECTOR | |
| | | 1 | **7J-9108** | 1 | SEAL-O-RING | |
| | 11 | 1 | *148-8354* | 2 | ELBOW GP | |
| | | | | | (EACH INCLUDES) | |
| | | 1 | **3K-0360** | 1 | SEAL-O-RING | |
| | | 1 | **6V-8398** | 1 | SEAL-O-RING | |
| | | 1 | **6V-9002** | 1 | ELBOW | |
| | 12 | 1 | *148-8364* | 2 | ELBOW GP | |
| | | | | | (EACH INCLUDES) | |
| | | 1 | **3K-0360** | 1 | SEAL-O-RING | |
| | | 1 | **6V-8398** | 1 | SEAL-O-RING | |
| | | 1 | **6V-8625** | 1 | ELBOW | |
| | 13 | 1 | *148-8411* | 2 | PLUG GP | |
| | | | | | (EACH INCLUDES) | |
| | | 1 | **3K-0360** | 1 | SEAL-O-RING | |
| | | 1 | **9S-4185** | 1 | PLUG | |
| | 14 | 1 | *148-8454* | 2 | TEE GP | |
| | | | | | (EACH INCLUDES) | |
| | | 1 | **6V-8398** | 3 | SEAL-O-RING | |
| | | 1 | **6V-8789** | 1 | TEE | |
| | 15 | 1 | **6V-8398** | 2 | SEAL-O-RING | |
| | 16 | 1 | **8T-1885** | 4 | CLIP (SLOT) | |
| | 17 | 1 | **8T-1886** | 4 | CLIP (TAB) | |
| | 18 | 1 | **8T-4121** | 4 | WASHER-HARD (11X21X2.5MM THK) | |
| M | 19 | 1 | **8T-4136** | 2 | BOLT (M10X1.5X25MM) | |
| M | 20 | 1 | **9X-2040** | 2 | SCREW-TRUSS HEAD (M10X1.5X25MM) | |

I-SEE HOSE FABRICATION GUIDE
M-METRIC PART

*183-8505* **LINES GP-SWING** *(contd. )* **i01657696**

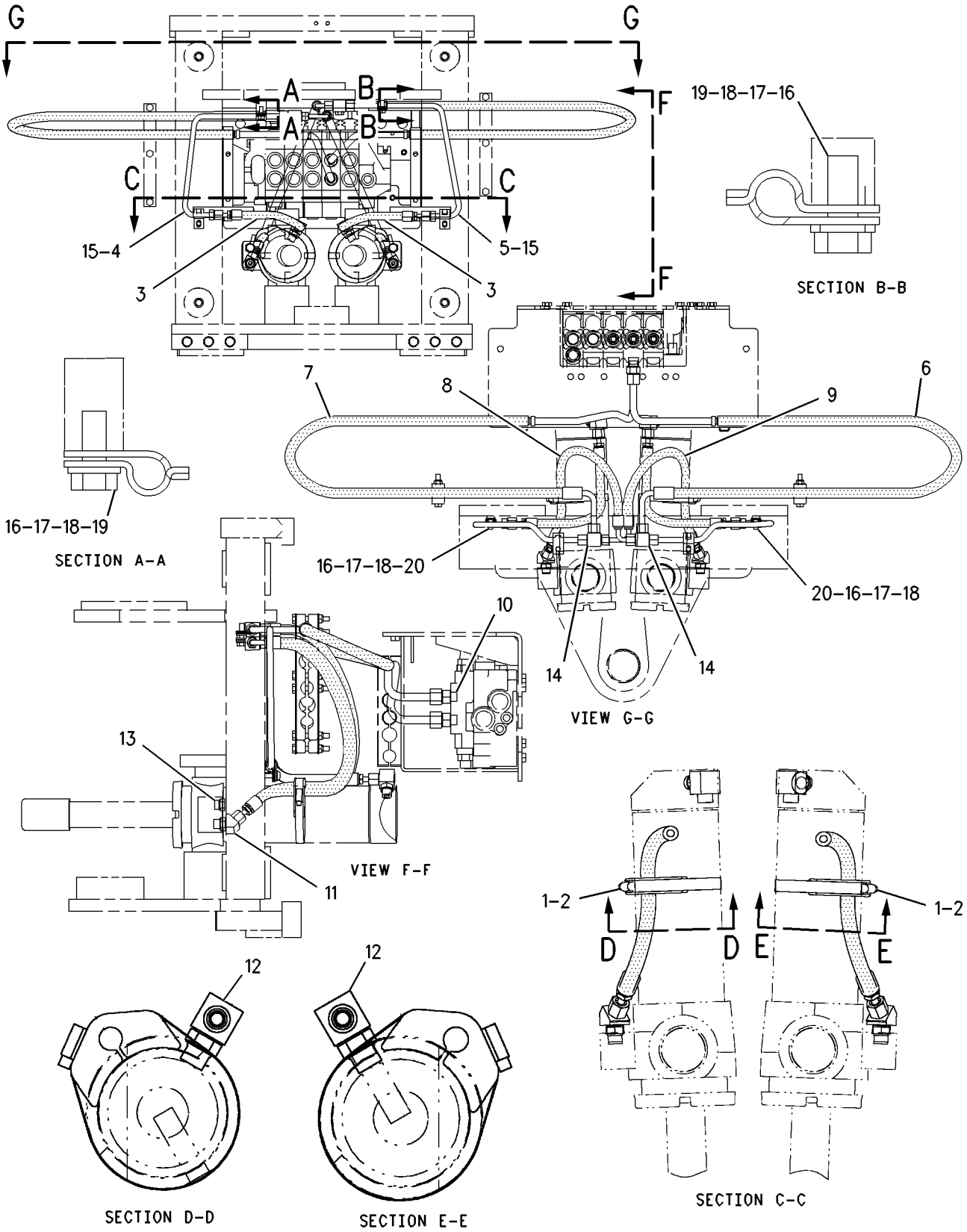


GRAPHIC #1 **<END>** g00731138

# HYDRAULIC SYSTEM

## *183-8522* LINES GP-SWING—NARROW FRAME

**S/N: BXC1-UP; DSX1-UP**
**PART OF 202-6124 HYDRAULIC AR**
**AN ATTACHMENT**

**SMCS-5057, 5105** **i01581916**

| NOTE | REF NO | GRAPHIC REF | PART NUMBER | QTY | PART NAME 1 2 3 4 5 6 (PRODUCT LEVEL) | SEE PAGE |
|---|---|---|---|---|---|---|
| | 1 | 1 | **5P-0599** | 2 | CLAMP | |
| | 2 | 1 | **9R-2053** | 2 | BLOCK | |
| I | 3 | 1 | **107-6699** | 2 | HOSE AS | |
| | 4 | 1 | **109-1583** | 1 | TUBE AS | |
| | 5 | 1 | **176-0585** | 1 | TUBE AS | |
| | 6 | 1 | **183-8516** | 1 | HOSE AS | |
| | 7 | 1 | **183-8517** | 1 | HOSE AS | |
| I | 8 | 1 | **196-8438** | 1 | HOSE AS | |
| I | 9 | 1 | **196-8439** | 1 | HOSE AS | |
| | 10 | 1 | *148-8342* | 2 | CONNECTOR GP | |
| | | | | | (EACH INCLUDES) | |
| | | 1 | **3K-0360** | 1 | SEAL-O-RING | |
| | | 1 | **6V-8632** | 1 | CONNECTOR | |
| | | 1 | **7J-9108** | 1 | SEAL-O-RING | |
| | 11 | 1 | *148-8354* | 2 | ELBOW GP | |
| | | | | | (EACH INCLUDES) | |
| | | 1 | **3K-0360** | 1 | SEAL-O-RING | |
| | | 1 | **6V-8398** | 1 | SEAL-O-RING | |
| | | 1 | **6V-9002** | 1 | ELBOW | |
| | 12 | 1 | *148-8364* | 2 | ELBOW GP | |
| | | | | | (EACH INCLUDES) | |
| | | 1 | **3K-0360** | 1 | SEAL-O-RING | |
| | | 1 | **6V-8398** | 1 | SEAL-O-RING | |
| | | 1 | **6V-8625** | 1 | ELBOW | |
| | 13 | 1 | *148-8411* | 2 | PLUG AS | |
| | | | | | (EACH INCLUDES) | |
| | | 1 | **3K-0360** | 1 | SEAL-O-RING | |
| | | 1 | **9S-4185** | 1 | PLUG-O-RING | |
| | 14 | 1 | *148-8454* | 2 | TEE GP | |
| | | | | | (EACH INCLUDES) | |
| | | 1 | **6V-8398** | 3 | SEAL-O-RING | |
| | | 1 | **6V-8789** | 1 | TEE | |
| | 15 | 1 | **6V-8398** | 2 | SEAL-O-RING | |
| | 16 | 1 | **8T-1885** | 4 | CLIP (SLOT) | |
| | 17 | 1 | **8T-1886** | 4 | CLIP (TAB) | |
| | 18 | 1 | **8T-4121** | 4 | WASHER-HARD (11X21X2.5MM THK) | |
| M | 19 | 1 | **8T-4136** | 2 | BOLT (M10X1.5X25MM) | |
| M | 20 | 1 | **9X-2040** | 2 | SCREW-TRUSS HEAD (M10X1.5X25MM) | |

I-SEE HOSE FABRICATION GUIDE
M-METRIC PART

*183-8522* **LINES GP-SWING** *(contd. )* **i01581916**

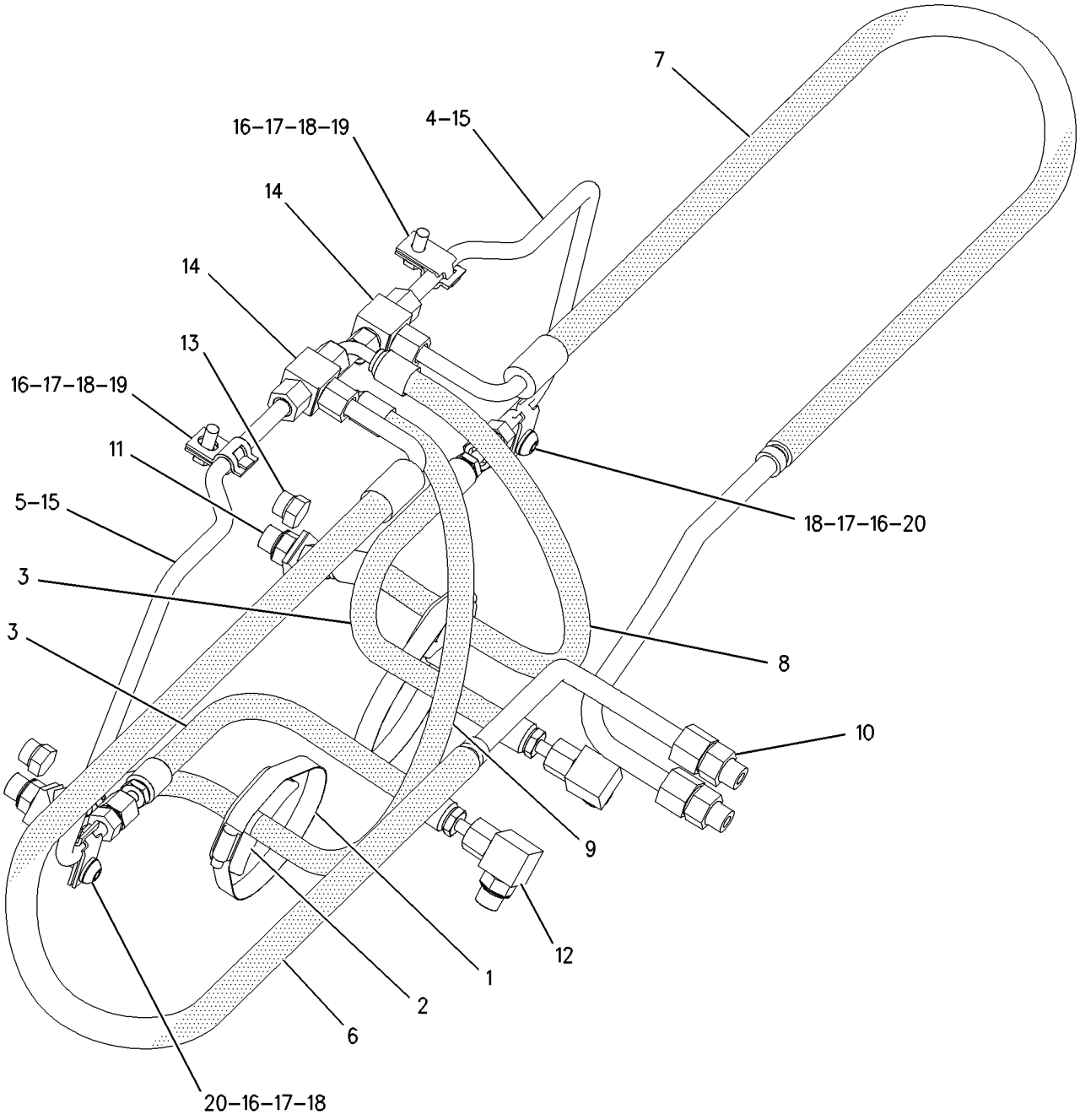


GRAPHIC #1 **<END>** g00820882

# HYDRAULIC SYSTEM

## *202-6120* LINES GP-SWING—CUSHION—STANDARD FRAME

**S/N: BXC1-UP; DSX1-UP**
**PART OF 202-6123 HYDRAULIC AR**
**AN ATTACHMENT**

**SMCS-5057, 5105** **i01807097**

| NOTE | REF NO | GRAPHIC REF | PART NUMBER | QTY | PART NAME 1 2 3 4 5 6 (PRODUCT LEVEL) | SEE PAGE |
|---|---|---|---|---|---|---|
| | 1 | 1 | **5P-0599** | 2 | CLAMP | |
| | 2 | 1 | **9R-2053** | 2 | BLOCK | |
| I | 3 | 1 | **107-6699** | 2 | HOSE AS | |
| | 4 | 1 | **109-1583** | 1 | TUBE AS | |
| | 5 | 1 | **176-0585** | 1 | TUBE AS | |
| | 6 | 1 | **183-8496** | 1 | HOSE AS | |
| | 7 | 1 | **183-8498** | 1 | HOSE AS | |
| I | 8 | 1 | **196-8438** | 1 | HOSE AS | |
| I | 9 | 1 | **196-8439** | 1 | HOSE AS | |
| | 10 | 1 | **206-3685** | 1 | VALVE GP-CROSSOVER RELIEF | |
| I | 11 | 1 | **214-9348** | 1 | HOSE AS | |
| I | 12 | 1 | **214-9349** | 1 | HOSE AS | |
| | 13 | 1 | **220-0921** | 1 | BRACKET | |
| | 14 | 1 | **226-5634** | 2 | CONNECTOR AS | |
| | | | | | (EACH INCLUDES) | |
| | | 1 | **3J-1907** | 1 | SEAL-O-RING | |
| | | 1 | **4J-5477** | 1 | SEAL-O-RING | |
| | | 1 | **167-0566** | 1 | CARTRIDGE | |
| | | 1 | **226-5633** | 1 | CONNECTOR | |
| | 15 | 1 | *148-8342* | 2 | CONNECTOR GP | |
| | | | | | (EACH INCLUDES) | |
| | | 1 | **3K-0360** | 1 | SEAL-O-RING | |
| | | 1 | **6V-8632** | 1 | CONNECTOR | |
| | | 1 | **7J-9108** | 1 | SEAL-O-RING | |
| | 16 | 1 | *148-8351* | 2 | ELBOW GP | |
| | | | | | (EACH INCLUDES) | |
| | | 1 | **4J-5477** | 1 | SEAL-O-RING | |
| | | 1 | **6V-9849** | 1 | ELBOW (SWIVEL) | |
| | 17 | 1 | **148-8354** | 2 | ELBOW GP | |
| | | | | | (EACH INCLUDES) | |
| | | 1 | **3K-0360** | 1 | SEAL-O-RING | |
| | | 1 | **6V-8398** | 1 | SEAL-O-RING | |
| | | 1 | **6V-9002** | 1 | ELBOW | |
| | 18 | 1 | *148-8364* | 2 | ELBOW AS | |
| | | | | | (EACH INCLUDES) | |
| | | 1 | **3K-0360** | 1 | SEAL-O-RING | |
| | | 1 | **6V-8398** | 1 | SEAL-O-RING | |
| | | 1 | **6V-8625** | 1 | ELBOW | |
| | 19 | 1 | *148-8411* | 2 | PLUG AS | |
| | | | | | (EACH INCLUDES) | |
| | | 1 | **3K-0360** | 1 | SEAL-O-RING | |
| | | 1 | **9S-4185** | 1 | PLUG | |
| | 20 | 1 | *217-2704* | 2 | CROSS AS | |
| | | | | | (EACH INCLUDES) | |
| | | 1 | **4J-5477** | 1 | SEAL-O-RING | |
| | | 1 | **6V-8398** | 3 | SEAL-O-RING | |
| | | 1 | **216-7145** | 1 | CROSS | |
| M | 21 | 1 | **5C-7261** | 2 | NUT (M8X1.25 THD) | |
| | 22 | 1 | **6V-8398** | 2 | SEAL-O-RING | |
| | 23 | 1 | **8T-1885** | 4 | CLIP (SLOT) | |
| | 24 | 1 | **8T-1886** | 4 | CLIP (TAB) | |
| | 25 | 1 | **8T-4121** | 6 | WASHER-HARD (11X21X2.5MM THK) | |
| M | 26 | 1 | **8T-4136** | 2 | BOLT (M10X1.5X25MM) | |
| M | 27 | 1 | **8T-4137** | 2 | BOLT (M10X1.5X20MM) | |
| | 28 | 1 | **8T-4224** | 4 | WASHER-HARD (8.8X16X2MM THK) | |

## *202-6120* **LINES GP-SWING** *(contd. )* **i01807097**

| NOTE | REF NO | GRAPHIC REF | PART NUMBER | QTY | PART NAME 1 2 3 4 5 6 (PRODUCT LEVEL) | SEE PAGE |
|---|---|---|---|---|---|---|
| M | 29 | 1 | **8T-6869** | 2 | BOLT (M8X1.25X60MM) | |
| M | 30 | 1 | **9X-2040** | 2 | SCREW-TRUSS HEAD (M10X1.5X25MM) | |

I-SEE HOSE FABRICATION GUIDE
M-METRIC PART

*202-6120* **LINES GP-SWING** *(contd.)* **i01807097**

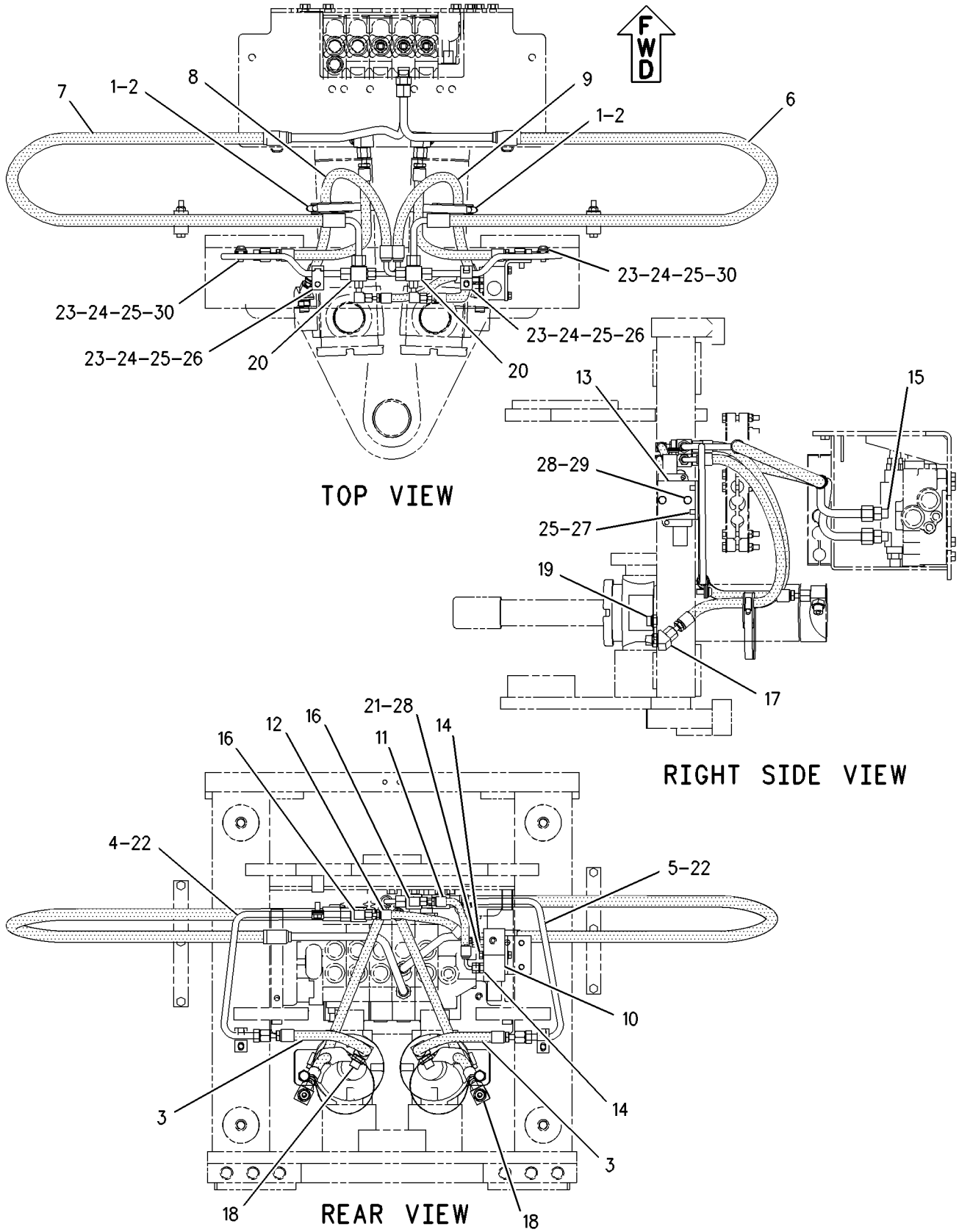


GRAPHIC #1 **<END>** g00998672

# HYDRAULIC SYSTEM

## *202-6121* LINES GP-SWING—CUSHION—NARROW FRAME

**S/N: BXC1-UP; DSX1-UP**
**PART OF 202-6125 HYDRAULIC AR**
**AN ATTACHMENT**

**SMCS-5057, 5105** **i01807094**

| NOTE | REF NO | GRAPHIC REF | PART NUMBER | QTY | PART NAME 1 2 3 4 5 6 (PRODUCT LEVEL) | SEE PAGE |
|---|---|---|---|---|---|---|
| | 1 | 1 | **5P-0599** | 2 | CLAMP | |
| | 2 | 1 | **9R-2053** | 2 | BLOCK | |
| I | 3 | 1 | **107-6699** | 2 | HOSE AS | |
| | 4 | 1 | **109-1583** | 1 | TUBE AS | |
| | 5 | 1 | **176-0585** | 1 | TUBE AS | |
| | 6 | 1 | **183-8516** | 1 | HOSE AS | |
| | 7 | 1 | **183-8517** | 1 | HOSE AS | |
| I | 8 | 1 | **196-8438** | 1 | HOSE AS | |
| I | 9 | 1 | **196-8439** | 1 | HOSE AS | |
| | 10 | 1 | **206-3685** | 1 | VALVE GP-CROSSOVER RELIEF | |
| I | 11 | 1 | **214-9348** | 1 | HOSE AS | |
| I | 12 | 1 | **214-9349** | 1 | HOSE AS | |
| | 13 | 1 | **220-0921** | 1 | BRACKET | |
| | 14 | 1 | **226-5634** | 2 | CONNECTOR AS | |
| | | | | | (EACH INCLUDES) | |
| | | 1 | **3J-1907** | 1 | SEAL-O-RING | |
| | | 1 | **4J-5477** | 1 | SEAL-O-RING | |
| | | 1 | **167-0566** | 1 | CARTRIDGE | |
| | | 1 | **226-5633** | 1 | CONNECTOR | |
| | 15 | 1 | *148-8342* | 2 | CONNECTOR GP | |
| | | | | | (EACH INCLUDES) | |
| | | 1 | **3K-0360** | 1 | SEAL-O-RING | |
| | | 1 | **6V-8632** | 1 | CONNECTOR | |
| | | 1 | **7J-9108** | 1 | SEAL-O-RING | |
| | 16 | 1 | *148-8351* | 2 | ELBOW GP | |
| | | | | | (EACH INCLUDES) | |
| | | 1 | **4J-5477** | 1 | SEAL-O-RING | |
| | | 1 | **6V-9849** | 1 | ELBOW (SWIVEL) | |
| | 17 | 1 | **148-8354** | 2 | ELBOW GP | |
| | | | | | (EACH INCLUDES) | |
| | | 1 | **3K-0360** | 1 | SEAL-O-RING | |
| | | 1 | **6V-8398** | 1 | SEAL-O-RING | |
| | | 1 | **6V-9002** | 1 | ELBOW | |
| | 18 | 1 | *148-8364* | 2 | ELBOW AS | |
| | | | | | (EACH INCLUDES) | |
| | | 1 | **3K-0360** | 1 | SEAL-O-RING | |
| | | 1 | **6V-8398** | 1 | SEAL-O-RING | |
| | | 1 | **6V-8625** | 1 | ELBOW | |
| | 19 | 1 | *148-8411* | 2 | PLUG AS | |
| | | | | | (EACH INCLUDES) | |
| | | 1 | **3K-0360** | 1 | SEAL-O-RING | |
| | | 1 | **9S-4185** | 1 | PLUG | |
| | 20 | 1 | *217-2704* | 2 | CROSS AS | |
| | | | | | (EACH INCLUDES) | |
| | | 1 | **4J-5477** | 1 | SEAL-O-RING | |
| | | 1 | **6V-8398** | 3 | SEAL-O-RING | |
| | | 1 | **216-7145** | 1 | CROSS | |
| M | 21 | 1 | **5C-7261** | 2 | NUT (M8X1.25 THD) | |
| | 22 | 1 | **6V-8398** | 2 | SEAL-O-RING | |
| | 23 | 1 | **8T-1885** | 4 | CLIP (SLOT) | |
| | 24 | 1 | **8T-1886** | 4 | CLIP (TAB) | |
| | 25 | 1 | **8T-4121** | 6 | WASHER-HARD (11X21X2.5MM THK) | |
| M | 26 | 1 | **8T-4136** | 2 | BOLT (M10X1.5X25MM) | |
| M | 27 | 1 | **8T-4137** | 2 | BOLT (M10X1.5X20MM) | |
| | 28 | 1 | **8T-4224** | 4 | WASHER-HARD (8.8X16X2MM THK) | |

## *202-6121* LINES GP-SWING *(contd.)*

i01807094

| NOTE | REF NO | GRAPHIC REF | PART NUMBER | QTY | PART NAME 1 2 3 4 5 6 (PRODUCT LEVEL) | SEE PAGE |
|---|---|---|---|---|---|---|
| M | 29 | 1 | **8T-6869** | 2 | BOLT (M8X1.25X60MM) | |
| M | 30 | 1 | **9X-2040** | 2 | SCREW-TRUSS HEAD (M10X1.5X25MM) | |

I-SEE HOSE FABRICATION GUIDE
M-METRIC PART

*202-6121* **LINES GP-SWING** *(contd. )* **i01807094**

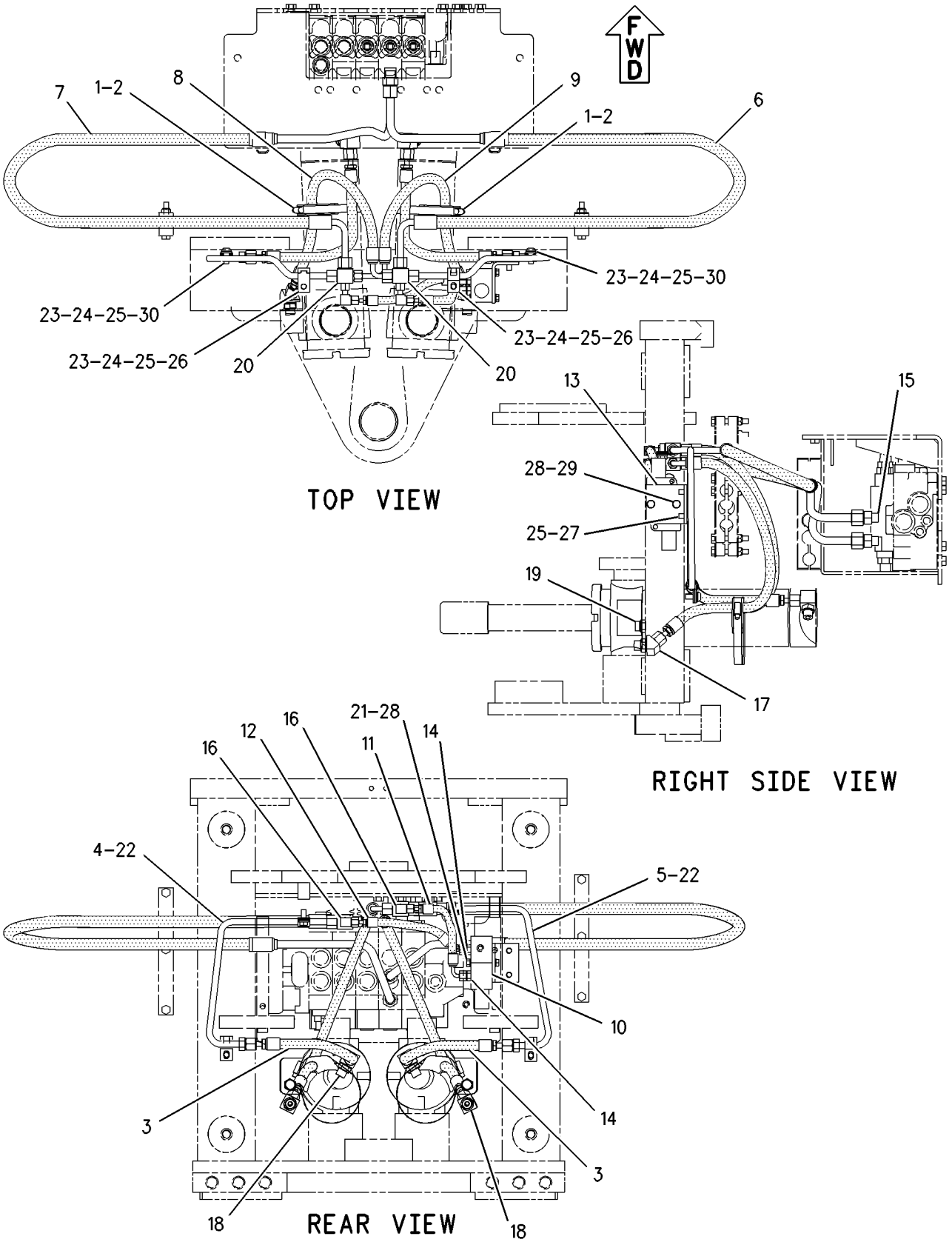


GRAPHIC #1 **<END>** g00998692

# HYDRAULIC SYSTEM

## *189-0551* LINES GP-TILT CYLINDER

**S/N: BXC1-UP; DSX1-UP**
**PART OF 185-0060, 185-0062 HYDRAULIC AR**
**AN ATTACHMENT**

**SMCS-5057, 5104** **i01697155**

| NOTE | REF NO | GRAPHIC REF | PART NUMBER | QTY | PART NAME 1 2 3 4 5 6 (PRODUCT LEVEL) | SEE PAGE |
|---|---|---|---|---|---|---|
| | 1 | 1 | **7K-1181** | 2 | STRAP-CABLE | |
| | 2 | 1 | **8T-6726** | 4 | CLAMP-HOSE | |
| | 3 | 1 | **9R-5948** | 4 | BLOCK | |
| | 4 | 1 | **112-5830** | 1 | TUBE AS | |
| | 5 | 1 | **112-5833** | 1 | TUBE AS | |
| I | 6 | 1 | **118-4637** | 2 | HOSE AS | |
| I | 7 | 1 | **118-4638** | 2 | HOSE AS | |
| | 8 | 1 | **122-4870** | 1 | BRACKET AS | |
| | 9 | 1 | **122-4871** | 1 | BRACKET AS | |
| | 10 | 1 | **158-3412** | 8 | CLIP (SLOT) | |
| | 11 | 1 | **187-4331** | 1 | TUBE AS | |
| | 12 | 1 | **187-4332** | 1 | TUBE AS | |
| | 13 | 1 | **215-4016** | 1 | PLATE AS | |
| | 14 | 1 | **216-0582** | 1 | PLATE AS | |
| | 15 | 1 | *148-8341* | 2 | CONNECTOR GP | |
| | | | | | (EACH INCLUDES) | |
| | | 1 | **3D-2824** | 1 | SEAL-O-RING | |
| | | 1 | **6V-8713** | 1 | CONNECTOR | |
| | | 1 | **7J-9108** | 1 | SEAL-O-RING | |
| | 16 | 1 | *148-8364* | 2 | ELBOW GP | |
| | | | | | (EACH INCLUDES) | |
| | | 1 | **3K-0360** | 1 | SEAL-O-RING | |
| | | 1 | **6V-8398** | 1 | SEAL-O-RING | |
| | | 1 | **6V-8625** | 1 | ELBOW | |
| | 17 | 1 | *148-8446* | 2 | TEE AS-SWIVEL | |
| | | | | | (EACH INCLUDES) | |
| | | 1 | **6V-9838** | 1 | TEE-SWIVEL | |
| | | 1 | **7J-9108** | 2 | SEAL-O-RING | |
| | 18 | 1 | **151-4841** | 2 | BLOCK | |
| | 19 | 1 | **6V-8398** | 4 | SEAL-O-RING | |
| | 20 | 1 | **8T-4121** | 10 | WASHER-HARD (11X21X2.5MM THK) | |
| M | 21 | 1 | **8T-4136** | 4 | BOLT (M10X1.5X25MM) | |
| M | 22 | 1 | **8T-4195** | 2 | BOLT (M10X1.5X30MM) | |
| M | 23 | 1 | **8T-4196** | 4 | BOLT (M10X1.5X35MM) | |
| | 24 | 1 | **9R-7803** | 4 | CLIP | |

I-SEE HOSE FABRICATION GUIDE
M-METRIC PART

*189-0551* **LINES GP-TILT CYLINDER** *(contd.)* **i01697155**

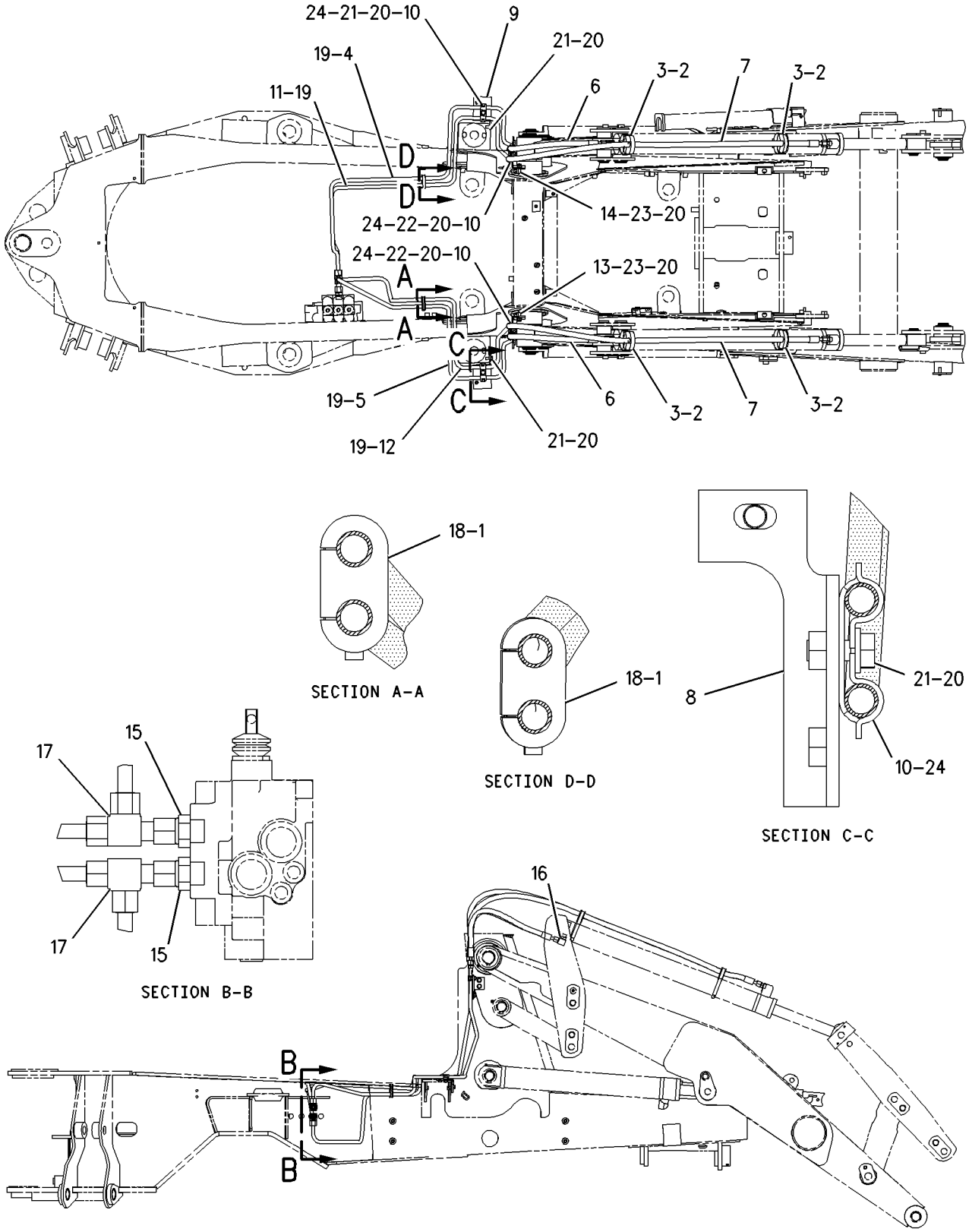


GRAPHIC #1 **<END>** g00873711

# HYDRAULIC SYSTEM

## *189-0555* LINES GP-TILT CYLINDER

**S/N: BXC1-UP; DSX1-UP**
**PART OF 186-5335, 186-5337 HYDRAULIC AR**
**AN ATTACHMENT**

**SMCS-5057, 5104** **i01678796**

| NOTE | REF NO | GRAPHIC REF | PART NUMBER | QTY | PART NAME 1 2 3 4 5 6 (PRODUCT LEVEL) | SEE PAGE |
|---|---|---|---|---|---|---|
| | 1 | 1 | **7K-1181** | 1 | STRAP-CABLE | |
| I | 2 | 1 | **9R-1034** | 2 | HOSE AS | |
| I | 3 | 1 | **9R-9198** | 2 | HOSE AS | |
| | 4 | 1 | **9R-9316** | 1 | BRACKET AS | |
| | 5 | 1 | **122-5822** | 1 | BRACKET AS | |
| | 6 | 1 | **151-4841** | 1 | BLOCK | |
| | 7 | 1 | **156-3837** | 4 | CLIP (SLOT) | |
| | 8 | 1 | **156-3838** | 2 | CLIP (TAB) | |
| | 9 | 1 | **158-3412** | 8 | CLIP (SLOT) | |
| | 10 | 1 | **187-3162** | 1 | TUBE AS | |
| | 11 | 1 | **187-3163** | 1 | TUBE AS | |
| | 12 | 1 | **187-3164** | 1 | TUBE AS | |
| | 13 | 1 | **187-3166** | 1 | TUBE AS | |
| | 14 | 1 | **187-4329** | 1 | TUBE AS | |
| | 15 | 1 | **207-7581** | 1 | TUBE AS | |
| | 16 | 1 | *148-8341* | 2 | CONNECTOR GP | |
| | | | | | (EACH INCLUDES) | |
| | | 1 | **3D-2824** | 1 | SEAL-O-RING | |
| | | 1 | **6V-8713** | 1 | CONNECTOR | |
| | | 1 | **7J-9108** | 1 | SEAL-O-RING | |
| | 17 | 1 | *148-8390* | 1 | ELBOW GP | |
| | | 1 | **2M-9780** | 1 | SEAL-O-RING | |
| | | 1 | **6V-8626** | 1 | ELBOW | |
| | | 1 | **7J-9108** | 1 | SEAL-O-RING | |
| | 18 | 1 | *148-8393* | 2 | ELBOW GP | |
| | | | | | (EACH INCLUDES) | |
| | | 1 | **6V-9852** | 1 | ELBOW-SWIVEL | |
| | | 1 | **7J-9108** | 1 | SEAL-O-RING | |
| | 19 | 1 | **6V-8398** | 8 | SEAL-O-RING | |
| | 20 | 1 | **8T-4121** | 10 | WASHER-HARD (11X21X2.5MM THK) | |
| M | 21 | 1 | **8T-4136** | 5 | BOLT (M10X1.5X25MM) | |
| M | 22 | 1 | **8T-4137** | 2 | BOLT (M10X1.5X20MM) | |
| M | 23 | 1 | **8T-4195** | 2 | BOLT (M10X1.5X30MM) | |
| | 24 | 1 | **9R-7803** | 4 | CLIP | |

I-SEE HOSE FABRICATION GUIDE
M-METRIC PART

*189-0555* **LINES GP-TILT CYLINDER** *(contd.)* **i01678796**

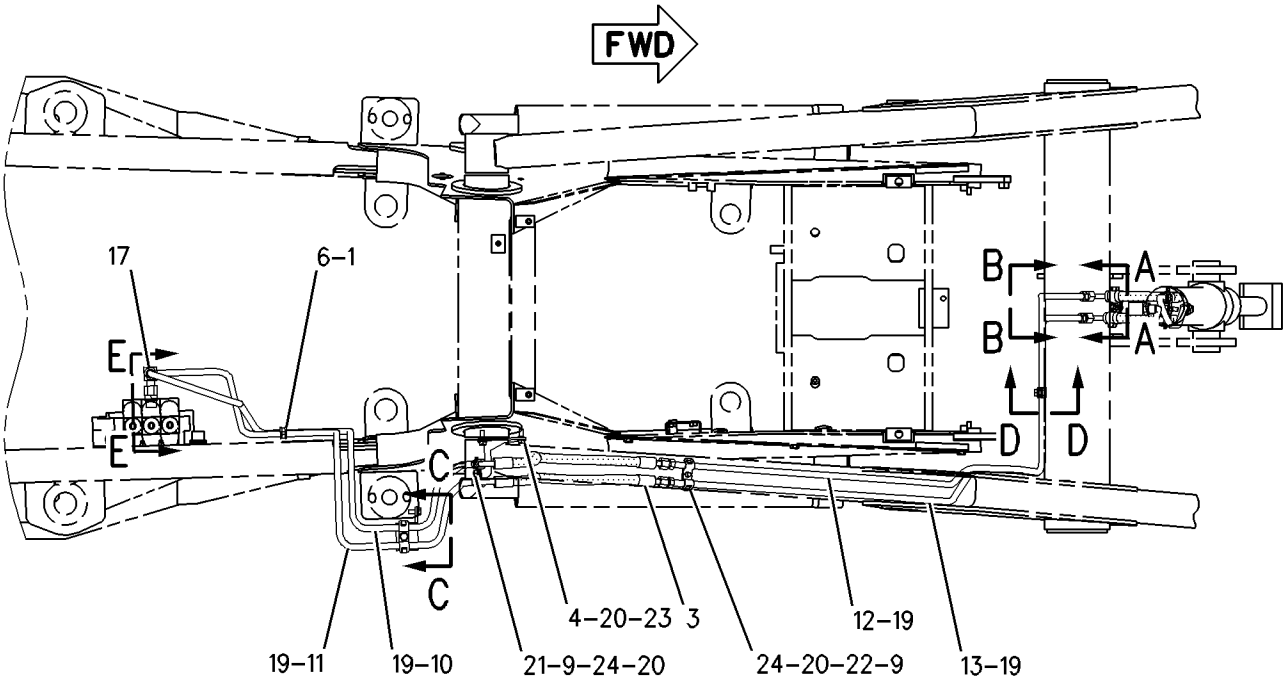


TOP VIEW

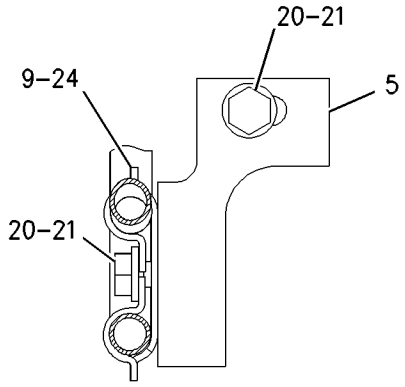


SECTION C-C

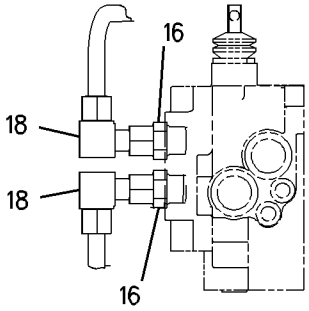


SECTION E-E

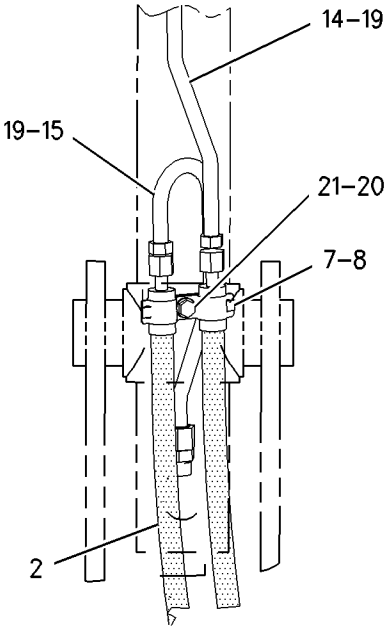


VIEW B-B

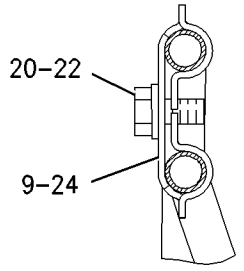


SECTION D-D

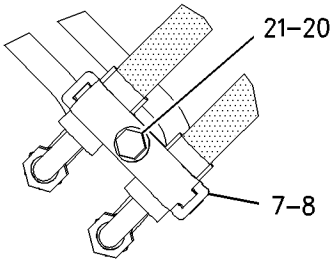


SECTION A-A

GRAPHIC #1 **<END>** g00866352

# HYDRAULIC SYSTEM

## *189-3823* LOCK GP-HYDRAULIC FOOT CONTROL

**S/N: BXC1-UP; DSX1-UP**
**PART OF 190-2802 CONVERSION AR-CERTIFICATION**
**AN ATTACHMENT**

**SMCS-5001** **i01480432**

| NOTE | REF NO | GRAPHIC REF | PART NUMBER | QTY | PART NAME 1 2 3 4 5 6 (PRODUCT LEVEL) | SEE PAGE |
|---|---|---|---|---|---|---|
| | 1 | 1 | **179-8235** | 1 | LOCKPIN | |
| | 2 | 1 | **184-5382** | 1 | PIN | |

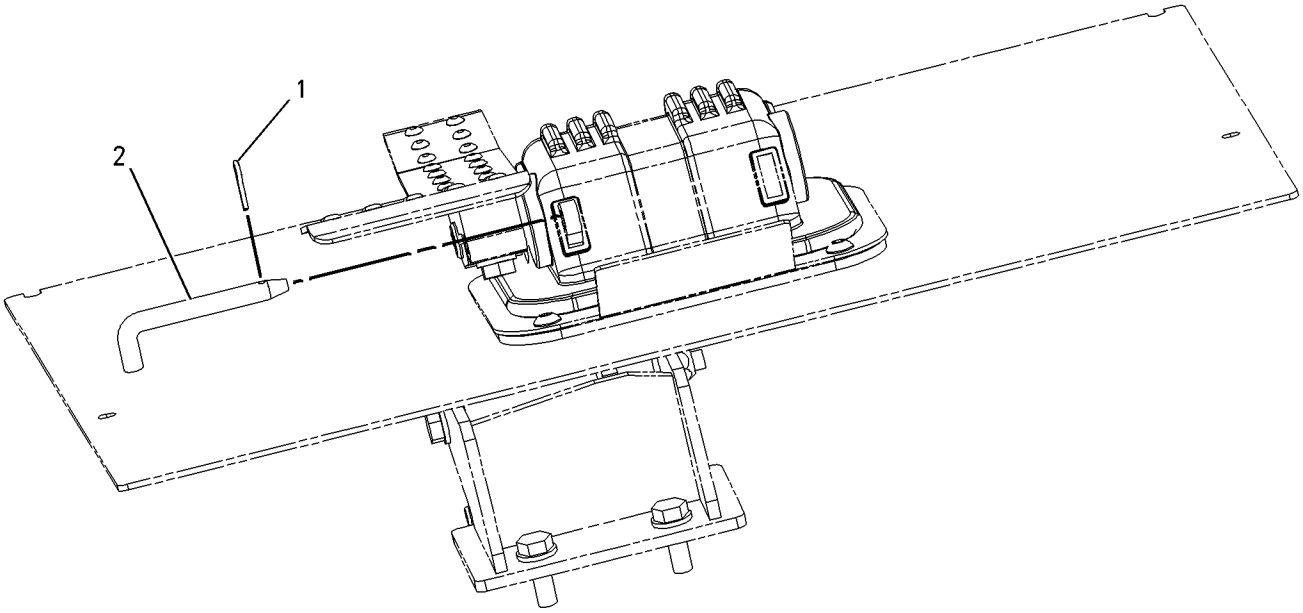


GRAPHIC #1 **<END>** g00770828

# HYDRAULIC SYSTEM

## *106-2404* LOCK GP-HYDRAULIC HAND CONTROL

**S/N: BXC1-UP; DSX1-UP**
**PART OF 190-2802 CONVERSION AR-CERTIFICATION**
**AN ATTACHMENT**

**SMCS-5001** **i00535073**

| NOTE | REF NO | GRAPHIC REF | PART NUMBER | QTY | PART NAME 1 2 3 4 5 6 (PRODUCT LEVEL) | SEE PAGE |
|---|---|---|---|---|---|---|
| | 1 | 1 | **106-2405** | 1 | PLATE AS | |
| | 2 | 1 | **106-2409** | 1 | PIN | |
| M | 3 | 1 | **8T-4136** | 2 | BOLT (M10X1.50X25MM) | |
| | 4 | 1 | **8T-4223** | 2 | WASHER-HARD (3MM THK) | |

M-METRIC PART

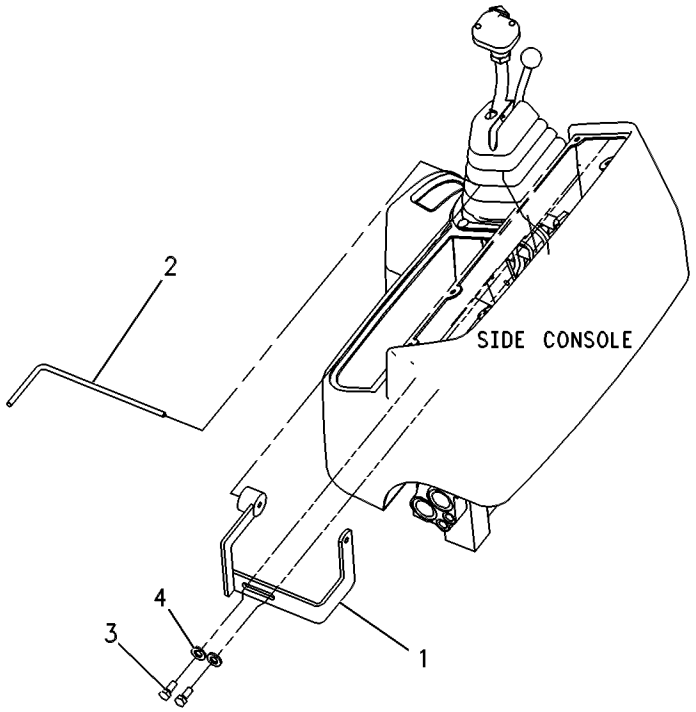


GRAPHIC #1 **<END>** g00131793

## *185-1598* MOUNTING GP-BANK VALVE—LOADER, MECHANICAL

**S/N: BXC1-UP; DSX1-UP**

**PART OF 185-0060, 185-0061, 185-0062, 185-0063, 186-5335, 186-5336, 186-5337, 186-5338 HYDRAULIC AR**

**AN ATTACHMENT**

**SMCS-5051** **i01523519**

| NOTE | REF NO | GRAPHIC REF | PART NUMBER | QTY | PART NAME 1 2 3 4 5 6 (PRODUCT LEVEL) | SEE PAGE |
|---|---|---|---|---|---|---|
| | 1 | 1 | **199-7854** | 2 | SPACER (11.8X20X45MM THK) | |
| M | 2 | 1 | **8T-0389** | 2 | LOCKNUT (M10X1.5 THD) | |
| | 3 | 1 | **8T-4121** | 5 | WASHER-HARD (11X21X2.5MM THK) | |
| M | 4 | 1 | **8T-4186** | 1 | BOLT (M10X1.5X40MM) | |
| M | 5 | 1 | **8T-4198** | 2 | BOLT (M10X1.5X100MM) | |

M-METRIC PART

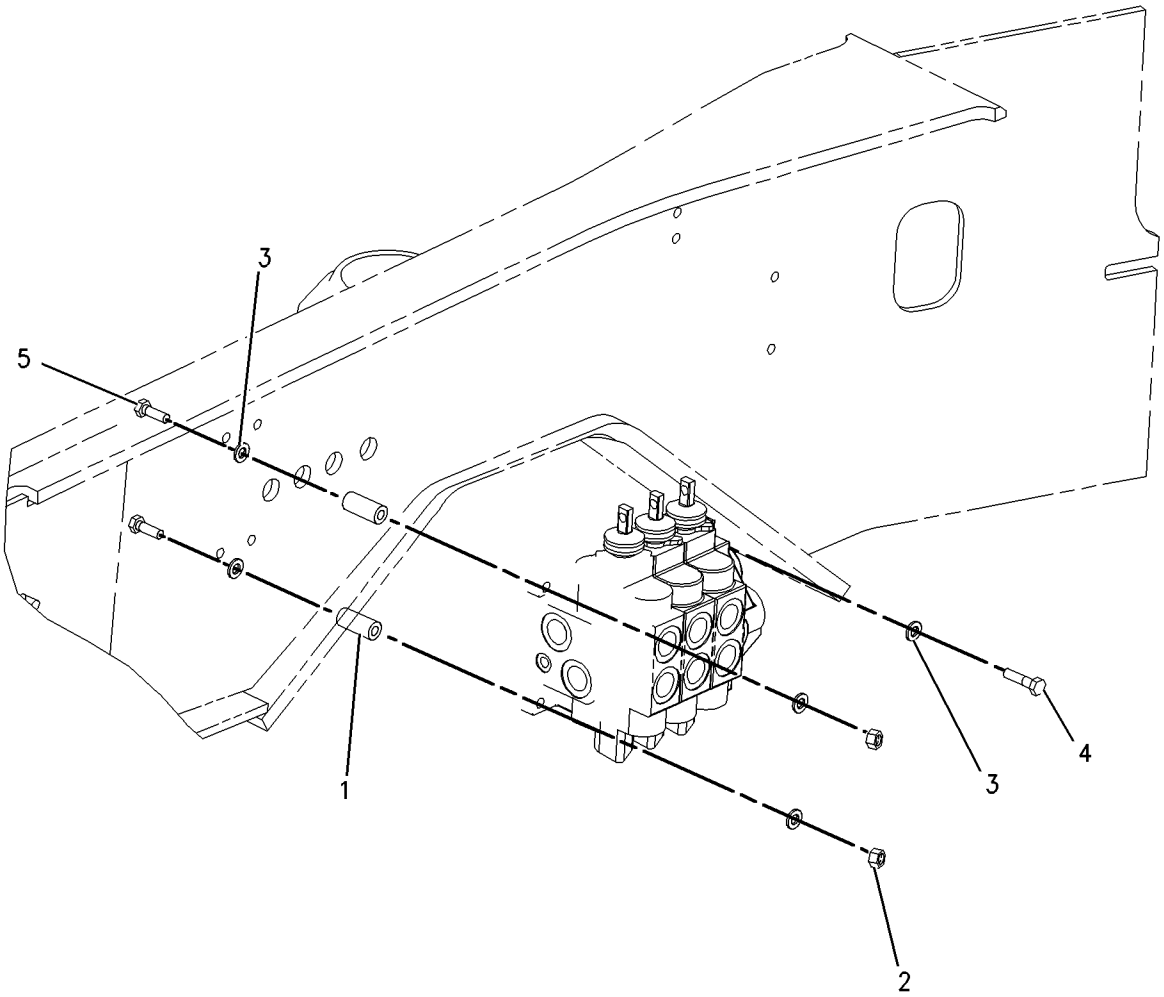


GRAPHIC #1 **<END>** g00791506

# *185-3167* MOUNTING GP-BANK VALVE—BACKHOE

**S/N: BXC1-UP; DSX1-UP**

**PART OF 237-9297, 237-9298 HYDRAULIC AR**

**SMCS-5051** **i01668180**

| NOTE | REF NO | GRAPHIC REF | PART NUMBER | QTY | PART NAME 1 2 3 4 5 6 (PRODUCT LEVEL) | SEE PAGE |
|---|---|---|---|---|---|---|
| | 1 | 1 | **203-5491** | 1 | BRACKET AS | |
| | 2 | 1 | **8T-4121** | 5 | WASHER-HARD (11X21X2.5MM THK) | |
| M | 3 | 1 | **8T-4183** | 3 | BOLT (M12X1.75X40MM) | |
| M | 4 | 1 | **8T-4185** | 1 | BOLT (M10X1.5X50MM) | |
| M | 5 | 1 | **8T-4186** | 2 | BOLT (M10X1.5X40MM) | |
| | 6 | 1 | **8T-4223** | 3 | WASHER-HARD (13.5X25.5X3MM THK) | |

M-METRIC PART

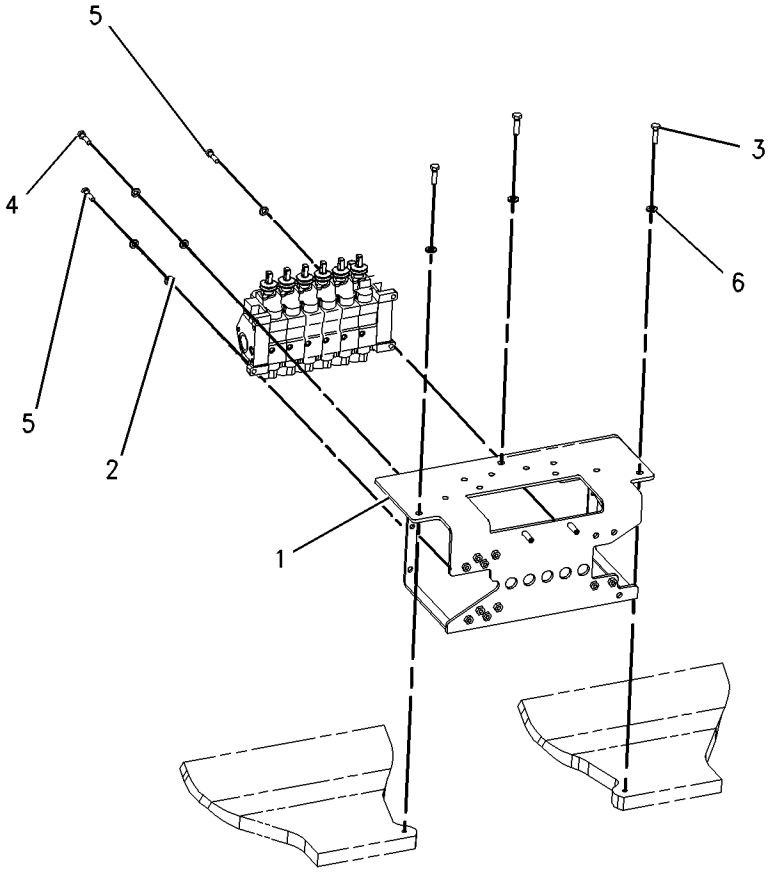


GRAPHIC #1 **<END>** g00861606

# HYDRAULIC SYSTEM

## *9R-4668* MOUNTING GP-CYLINDER—MULTIPURPOSE

**S/N: BXC1-UP; DSX1-UP**

**PART OF 111-8634, 111-8635, 112-0938, 112-0939, 124-0486, 124-0487, 124-0488, 124-0489, 164-4659, 208-0827 BUCKET AR-MULTIPURPOSE AN ATTACHMENT**

**SMCS-5102, 6068, 7562** **i00528574**

| NOTE | REF NO | GRAPHIC REF | PART NUMBER | QTY | PART NAME 1 2 3 4 5 6 (PRODUCT LEVEL) | SEE PAGE |
|---|---|---|---|---|---|---|
| | 1 | 1 | **9R-4677** | 2 | PIN | |
| | 2 | 1 | **3B-5317** | 4 | COTTER | |
| | 3 | 1 | **9R-4678** | 2 | PIN | |
| | 4 | 1 | **3B-8489** | 4 | FITTING-GREASE (1/8-27 THD) | |

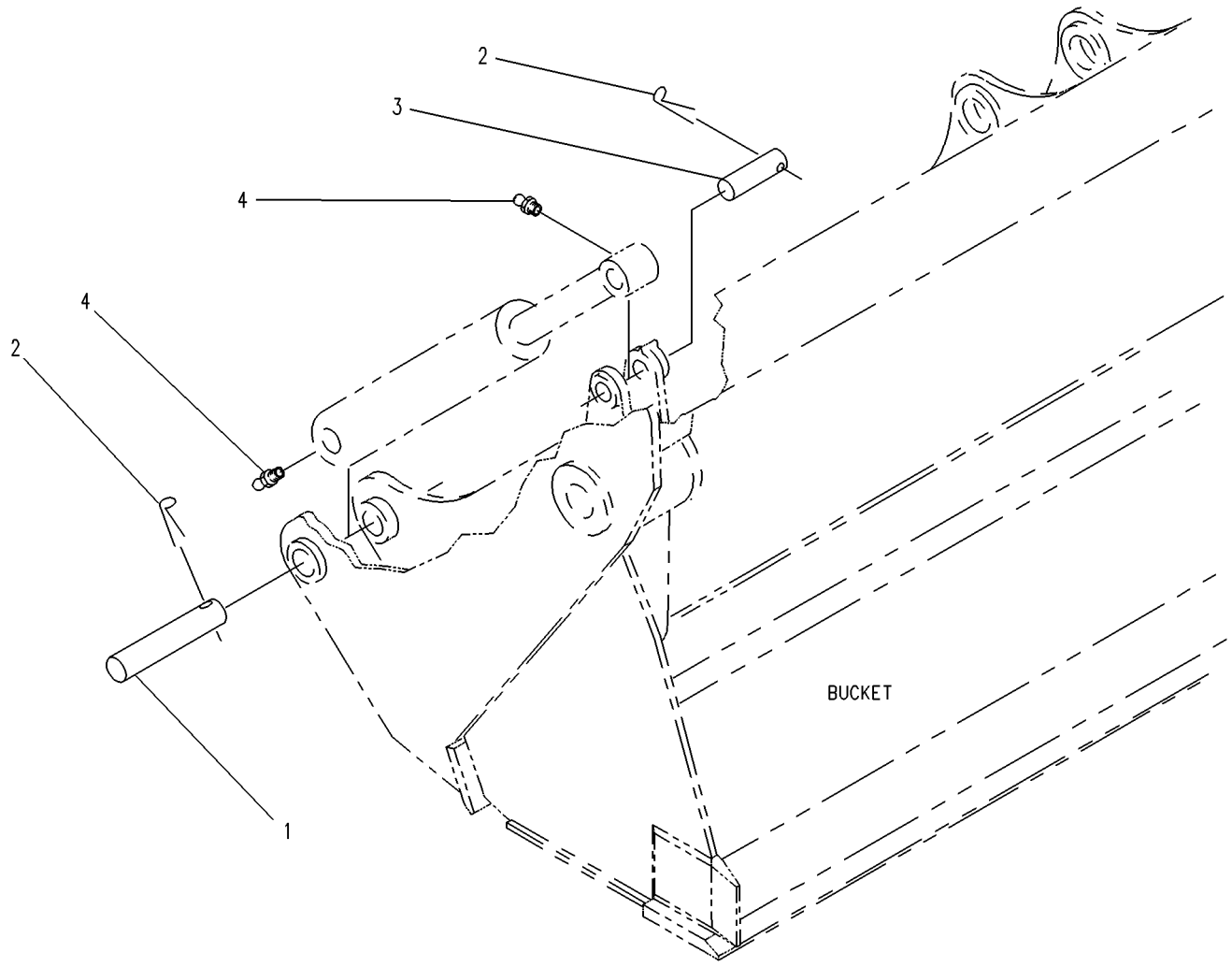


GRAPHIC #1 **<END>** g00219196

# HYDRAULIC SYSTEM

## *112-1826* MOUNTING GP-HYDRAULIC PUMP

**S/N: BXC1-UP; DSX1-UP**

**PART OF 237-9297, 237-9298 HYDRAULIC AR**

**SMCS-5070** **i00534530**

| NOTE | REF NO | GRAPHIC REF | PART NUMBER | QTY | PART NAME 1 2 3 4 5 6 (PRODUCT LEVEL) | SEE PAGE |
|---|---|---|---|---|---|---|
| M | 1 | 1 | **8T-9405** | 4 | BOLT-SOCKET HEAD (M4X0.7X16MM) | |
| | 2 | 1 | **9U-8886** | 1 | RING-SEAL (44.95MM ID) | |
| | 3 | 1 | **115-1918** | 1 | PLATE | |
| | 4 | 1 | **117-3534** | 1 | ADAPTER | |
| | 5 | 1 | **117-3535** | 1 | HUB | |
| Y | 6 | 1 | **128-5596** | 1 | SHAFT GP-POWER TAKE-OFF | 537 |
| | 7 | 1 | **5F-3106** | 1 | SEAL-O-RING (126.59MM ID) | |
| | 8 | 1 | **8T-4122** | 2 | WASHER (3.5MM THK) | |
| M | 9 | 1 | **8T-7338** | 2 | BOLT (M16X2.0X45MM) | |

M-METRIC PART
Y-SEPARATE ILLUSTRATION

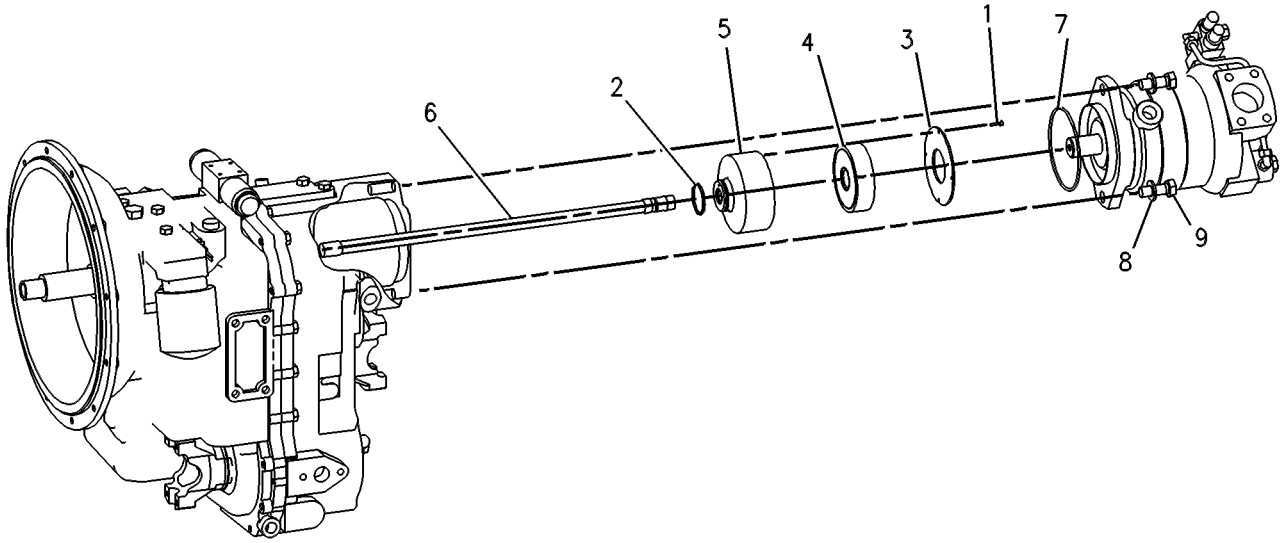


GRAPHIC #1 **<END>** g00131524

# HYDRAULIC SYSTEM

## *165-7769* MOUNTING GP-LINES

**S/N: BXC1-UP**

**PART OF 240-8683 BACKHOE AR-STANDARD STICK AN ATTACHMENT**

**SMCS-5057, 5456** **i01095868**

| NOTE | REF NO | GRAPHIC REF | PART NUMBER | QTY | PART NAME 1 2 3 4 5 6 (PRODUCT LEVEL) | SEE PAGE |
|---|---|---|---|---|---|---|
| M | 1 | 1 | **6V-9189** | 2 | LOCKNUT (M8X1.25 THD) | |
| | 2 | 1 | **8T-4121** | 4 | WASHER (2.5MM THK) | |
| M | 3 | 1 | **8T-4136** | 4 | BOLT (M10X1.50X25MM) | |
| | 4 | 1 | **8T-4224** | 4 | WASHER-HARD (2MM THK) | |
| M | 5 | 1 | **8T-6870** | 2 | BOLT (M8X70MM) | |
| | 6 | 1 | **9R-8874** | 2 | PLATE | |
| | 7 | 1 | **9R-8875** | 2 | BLOCK | |
| | 8 | 1 | **109-1258** | 2 | BLOCK | |
| | 9 | 1 | **109-1259** | 2 | BLOCK | |
| | 10 | 1 | **119-9398** | 1 | BLOCK | |
| | 11 | 1 | **119-9399** | 1 | BLOCK | |
| | 12 | 1 | **120-4397** | 1 | PLATE | |

M-METRIC PART

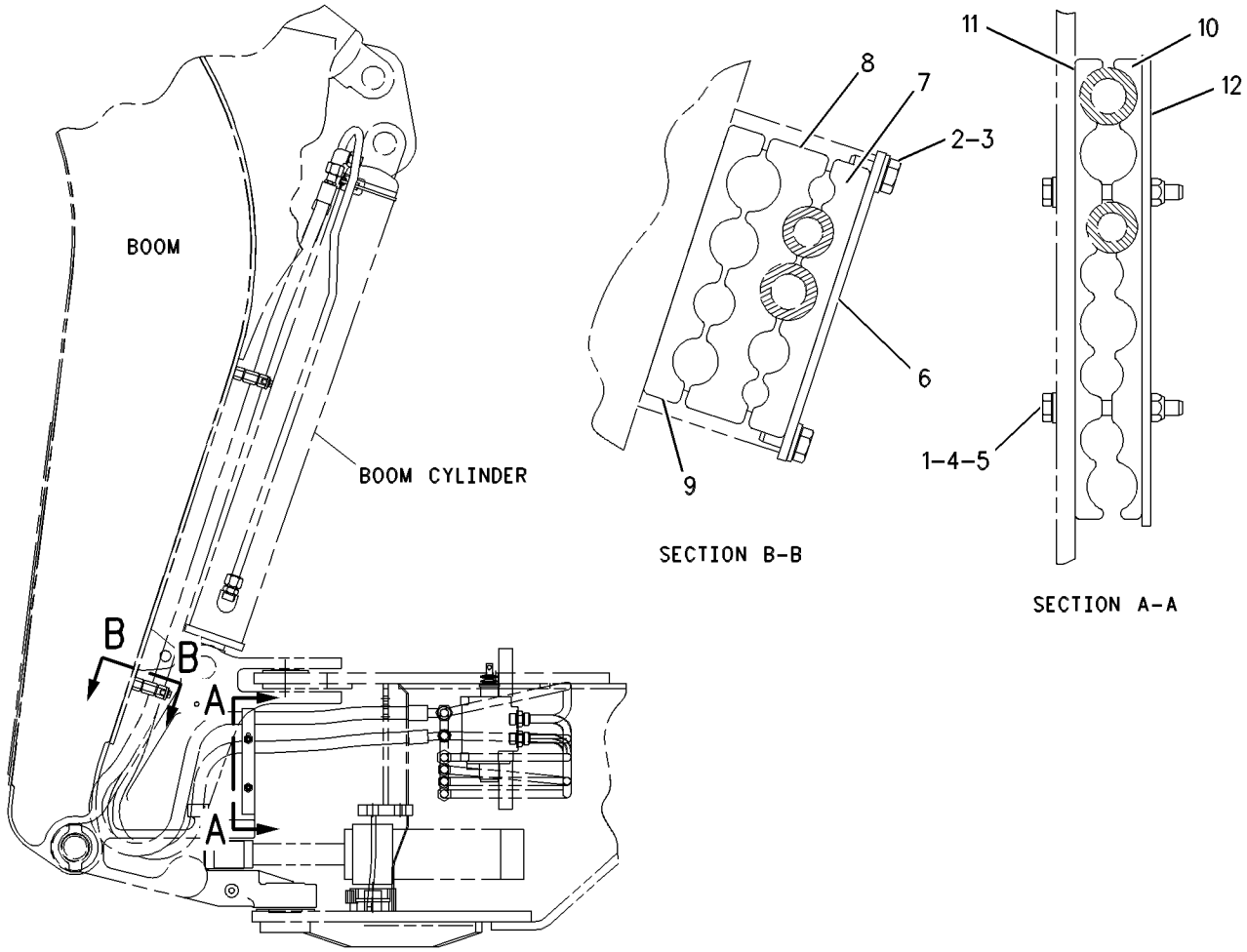


GRAPHIC #1 **<END>** g00533082

# HYDRAULIC SYSTEM

## *172-8508* MOUNTING GP-LINES

**S/N: BXC1-UP; DSX1-UP**

**PART OF 240-8687, 240-8688, 240-8697, 240-8698 BACKHOE AR-STANDARD STICK AN ATTACHMENT**

**SMCS-5057, 5456** **i01376524**

| NOTE | REF NO | GRAPHIC REF | PART NUMBER | QTY | PART NAME 1 2 3 4 5 6 (PRODUCT LEVEL) | SEE PAGE |
|---|---|---|---|---|---|---|
| | 1 | 1 | **176-9153** | 1 | BRACKET-LH | |
| | 2 | 1 | **176-9155** | 2 | CLAMP-LH | |
| | 3 | 1 | *148-8408* | 2 | PLUG AS | |
| | | | | | (EACH INCLUDES) | |
| | | 1 | **3D-2824** | 1 | SEAL-O-RING (23.47MM ID) | |
| | | 1 | **9S-4183** | 1 | PLUG | |
| | 4 | 1 | **8T-4121** | 2 | WASHER-HARD (11X21X2.5MM THK) | |
| M | 5 | 1 | **8T-4136** | 2 | BOLT (M10X1.5X25MM) | |

M-METRIC PART

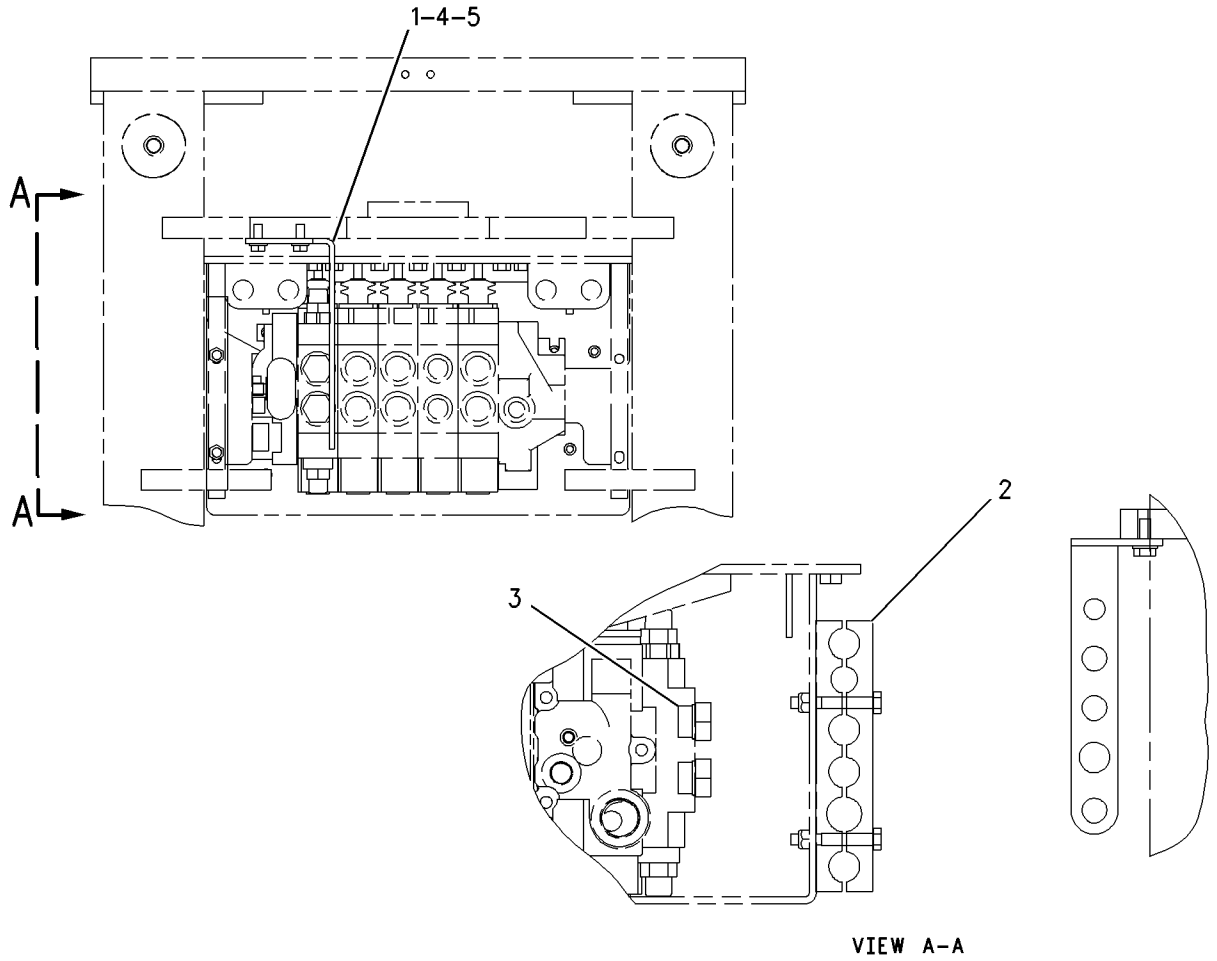


GRAPHIC #1 **<END>** g00729486

# HYDRAULIC SYSTEM

## *175-7620* MOUNTING GP-LINES

**S/N: BXC1-UP; DSX1-UP**
**4 BANK VALVE**
**PART OF 240-8683, 240-8684, 240-8693, 240-8694 BACKHOE AR-STANDARD STICK**
**AN ATTACHMENT**

**SMCS-5057, 5456** **i01496305**

| NOTE | REF NO | GRAPHIC REF | PART NUMBER | QTY | PART NAME 1 2 3 4 5 6 (PRODUCT LEVEL) | SEE PAGE |
|---|---|---|---|---|---|---|
| | 1 | 1 | **176-9152** | 1 | BRACKET-LH | |
| | 2 | 1 | **176-0145** | 2 | CLAMP | |
| | 3 | 1 | **8T-4121** | 2 | WASHER-HARD (11X21X2.5MM THK) | |
| M | 4 | 1 | **8T-4136** | 2 | BOLT (M10X1.5X25MM) | |

M-METRIC PART

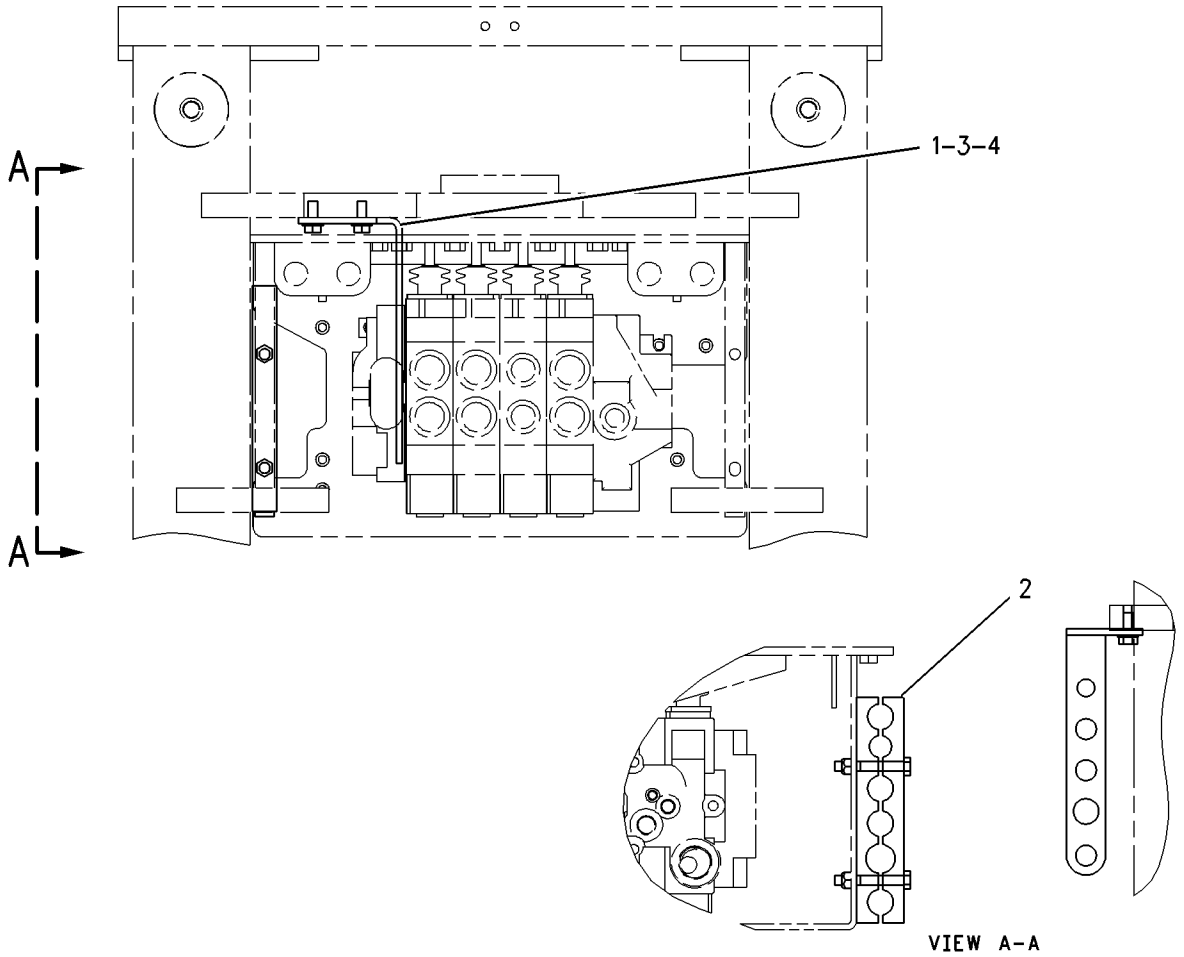


GRAPHIC #1 **<END>** g00727863

# HYDRAULIC SYSTEM

## *186-2950* MOUNTING GP-LINES

**S/N: BXC1-UP; DSX1-UP**

**PART OF 240-8490, 240-8491, 240-8493, 240-8504, 240-8505, 240-8506, 240-8507, 240-8689, 240-8690, 240-8691, 240-8692, 240-8699, 240-8700, 240-8701, 240-8702 BACKHOE AR-EXTENDABLE STICK, 240-8684, 240-8685, 240-8686, 240-8687, 240-8688, 240-8693, 240-8694, 240-8695, 240-8696, 240-8697, 240-8698 BACKHOE AR-STANDARD STICK**

**AN ATTACHMENT**

**SMCS-5057, 5456** **i01497842**

| NOTE | REF NO | GRAPHIC REF | PART NUMBER | QTY | PART NAME 1 2 3 4 5 6 (PRODUCT LEVEL) | SEE PAGE |
|---|---|---|---|---|---|---|
| | 1 | 1 | **9R-8875** | 2 | BLOCK | |
| | 2 | 1 | **109-1258** | 2 | BLOCK | |
| | 3 | 1 | **109-1259** | 2 | BLOCK | |
| | 4 | 1 | **119-9398** | 1 | BLOCK | |
| | 5 | 1 | **119-9399** | 1 | BLOCK | |
| | 6 | 1 | **120-4397** | 1 | PLATE | |
| M | 7 | 1 | **6V-9189** | 2 | LOCKNUT (M8X1.25 THD) | |
| | 8 | 1 | **8T-4121** | 4 | WASHER-HARD (11X21X2.5MM THK) | |
| M | 9 | 1 | **8T-4136** | 4 | BOLT (M10X1.5X25MM) | |
| | 10 | 1 | **8T-4224** | 4 | WASHER-HARD (8.8X16X2MM THK) | |
| M | 11 | 1 | **8T-6870** | 2 | BOLT (M8X1.25X70MM) | |
| | 12 | 1 | **9R-8874** | 2 | PLATE | |

M-METRIC PART

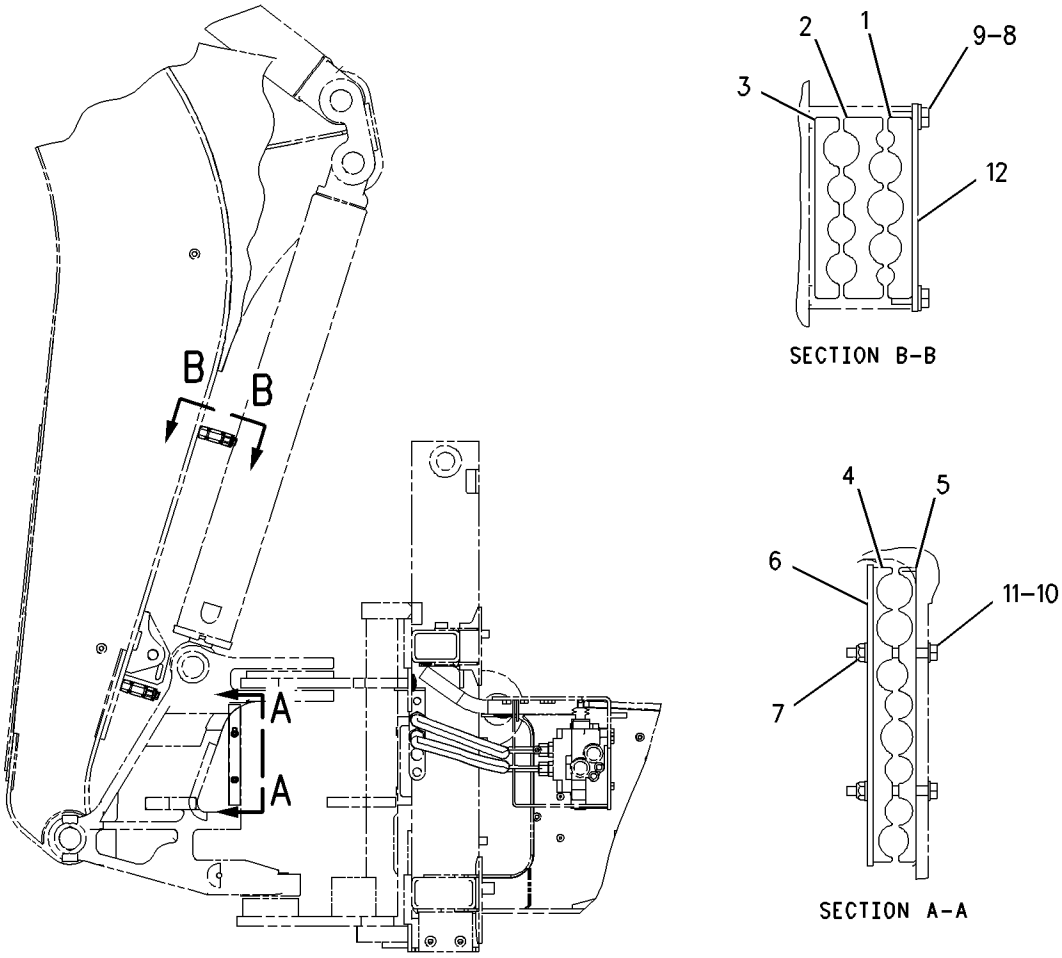


GRAPHIC #1 **<END>** g00778264

# HYDRAULIC SYSTEM

## 235-4110 PUMP GP-PISTON

**S/N: BXC1-UP; DSX1-UP**

**PART OF 237-9297, 237-9298 HYDRAULIC AR**

**SMCS-5070** **i01980507**

| NOTE | REF NO | GRAPHIC REF | PART NUMBER | QTY | PART NAME 1 2 3 4 5 6 (PRODUCT LEVEL) | SEE PAGE |
|---|---|---|---|---|---|---|
| | 1 | 2 | **180-6213** | 1 | RING-RETAINING | |
| | 2 | 2 | **6E-4003** | 2 | BEARING | |
| | 3 | 2 | **173-0637** | 1 | HOUSING-PUMP | |
| Y | 4 | 2 | **120-5726** | 1 | ROTATING GP-PUMP | 536 |
| | 5 | 2 | **3E-6769** | 4 | SEAL-O-RING | |
| M | 6 | 2 | **095-9805** | 4 | BOLT-SOCKET HEAD (M14X2X40MM) | |
| | 7 | 2 | **1P-6872** | 1 | CUP-BEARING | |
| | 8 | 2 | **8C-7110** | 1 | CONE-BEARING | |
| | 9 | 2 | **103-5520** | 1 | CARRIER-PIN | |
| | 10 | 1 | **6E-4000** | 1 | SPACER (25.5X35X3MM THK) | |
| | 11 | 2 | **3E-6770** | 1 | SEAL-O-RING | |
| | 12 | 1 | **6E-6175** | 1 | CYLINDER | |
| | 13 | 1 | **6E-6176** | 1 | SPRING | |
| | 14 | 1 | **6E-6174** | 1 | PLUNGER | |
| | 15 | 2 | **9S-8006** | 1 | PLUG | |
| | 16 | 2 | **2M-9780** | 1 | SEAL-O-RING | |
| | 17 | 2 | **162-1604** | 1 | SHAFT-PUMP | |
| | 18 | 1 | **6V-2323** | 1 | CONE-BEARING | |
| | 19 | 1 | **3B-5790** | 1 | CUP-BEARING | |
| | 20 | 1 | **6E-4004** | 2 | SEAL-SHAFT | |
| | 21 | 1 | **173-0639** | 1 | SWASHPLATE AS | |
| | 22 | 1 | **120-5727** | 1 | PISTON-CONTROL | |
| | 23 | 1 | **120-5729** | 1 | GUIDE-PISTON | |
| | 24 | 1 | **136-8423** | 1 | PLUG-BREAK OFF | |
| | 25 | 1 | **083-4419** | 1 | PIN | |
| | 26 | 2 | **173-0641** | 1 | PLUG-FILTER | |
| | 27 | 1 | **173-0638** | 1 | HEAD-PUMP | |
| | 28 | 1 | **215-9219** | 1 | ADAPTER AS | |
| | 29 | 1 | **3J-7352** | 2 | CONNECTOR | |
| | 30 | 1 | **3J-7354** | 3 | SEAL-O-RING | |
| | 31 | 1 | **193-8648** | 1 | TUBE AS | |
| Y | 32 | 1 | **103-5519** | 1 | VALVE GP-PUMP CONTROL (POWER COMPENSATOR) | 581 |
| M | 33 | 2 | **6V-5683** | 1 | BOLT (M6X1X16MM) | |
| | 34 | 2 | **3C-8388** | 1 | PIN-ROLL | |
| Y | 35 | 1 | **213-9804** | 1 | VALVE GP-PUMP CONTROL (PRESSURE, FLOW COMPENSATOR) | 582 |

M-METRIC PART
Y-SEPARATE ILLUSTRATION

## 235-4110 PUMP GP-PISTON *(contd. )* i01980507

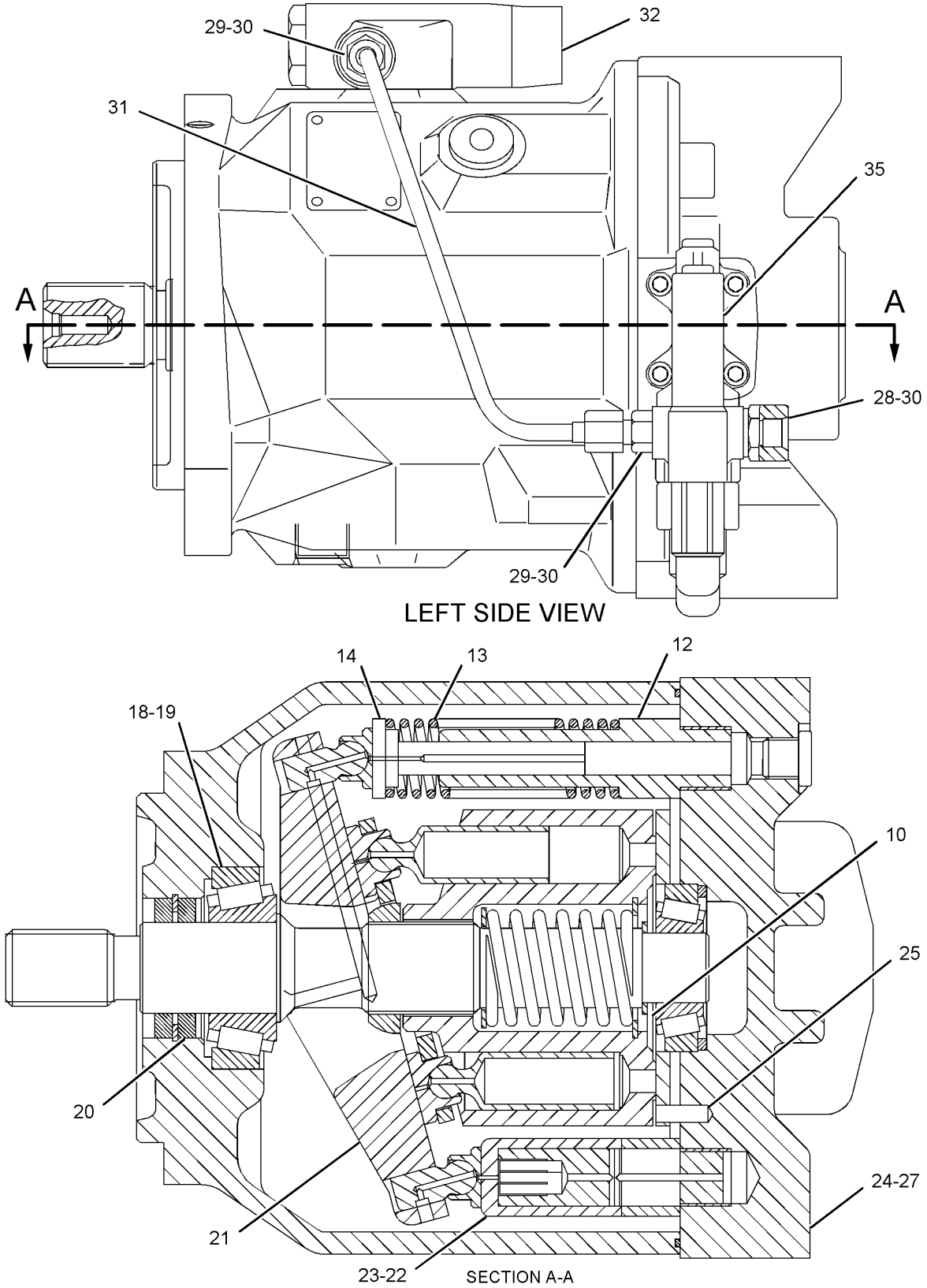


GRAPHIC #1 g01026676

**235-4110 PUMP GP-PISTON** *(contd. )* **i01980507**

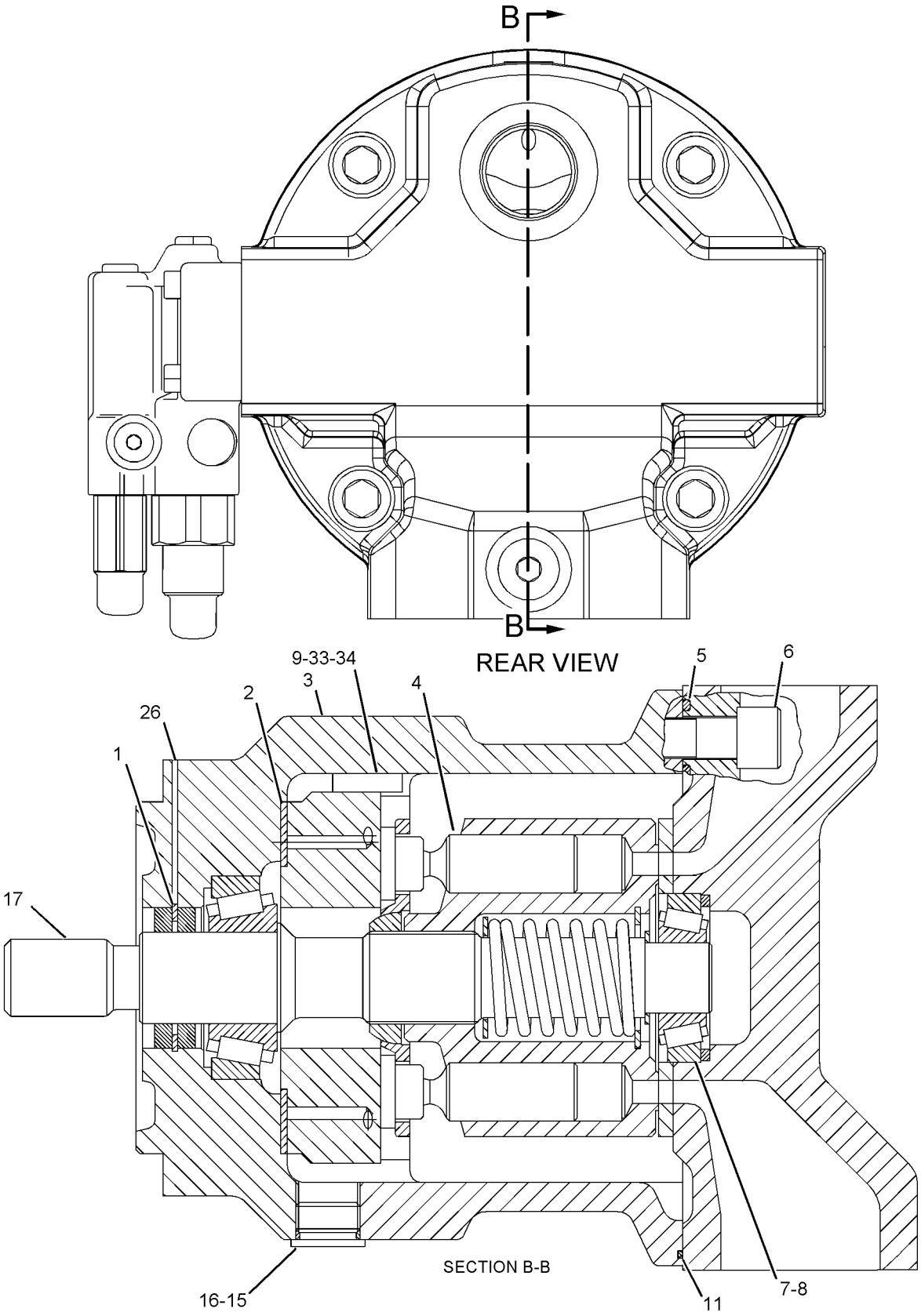


GRAPHIC #2 **<END>** g01026677

# HYDRAULIC SYSTEM

## 120-5726 ROTATING GP-PUMP

**S/N: BXC1-UP; DSX1-UP**

**PART OF 235-4110 PUMP GP-PISTON**

**SMCS-5070** **i00534731**

| NOTE | REF NO | GRAPHIC REF | PART NUMBER | QTY | PART NAME 1 2 3 4 5 6 (PRODUCT LEVEL) | SEE PAGE |
|---|---|---|---|---|---|---|
| | 1 | 1 | **6E-6151** | 9 | PISTON AS | |
| | 2 | 1 | **6E-6154** | 1 | PLATE-RETRACTION | |
| | 3 | 1 | **6E-6155** | 1 | BEARING | |
| | 4 | 1 | **6E-4007** | 1 | BARREL | |
| | 5 | 1 | **6E-3341** | 1 | SEAT-SPRING | |
| | 6 | 1 | **6E-4009** | 1 | SPRING | |
| | 7 | 1 | **6E-6158** | 1 | RING | |
| | 8 | 1 | **120-5724** | 1 | PLATE-VALVE | |
| | 9 | 1 | **6E-6157** | 3 | PIN | |

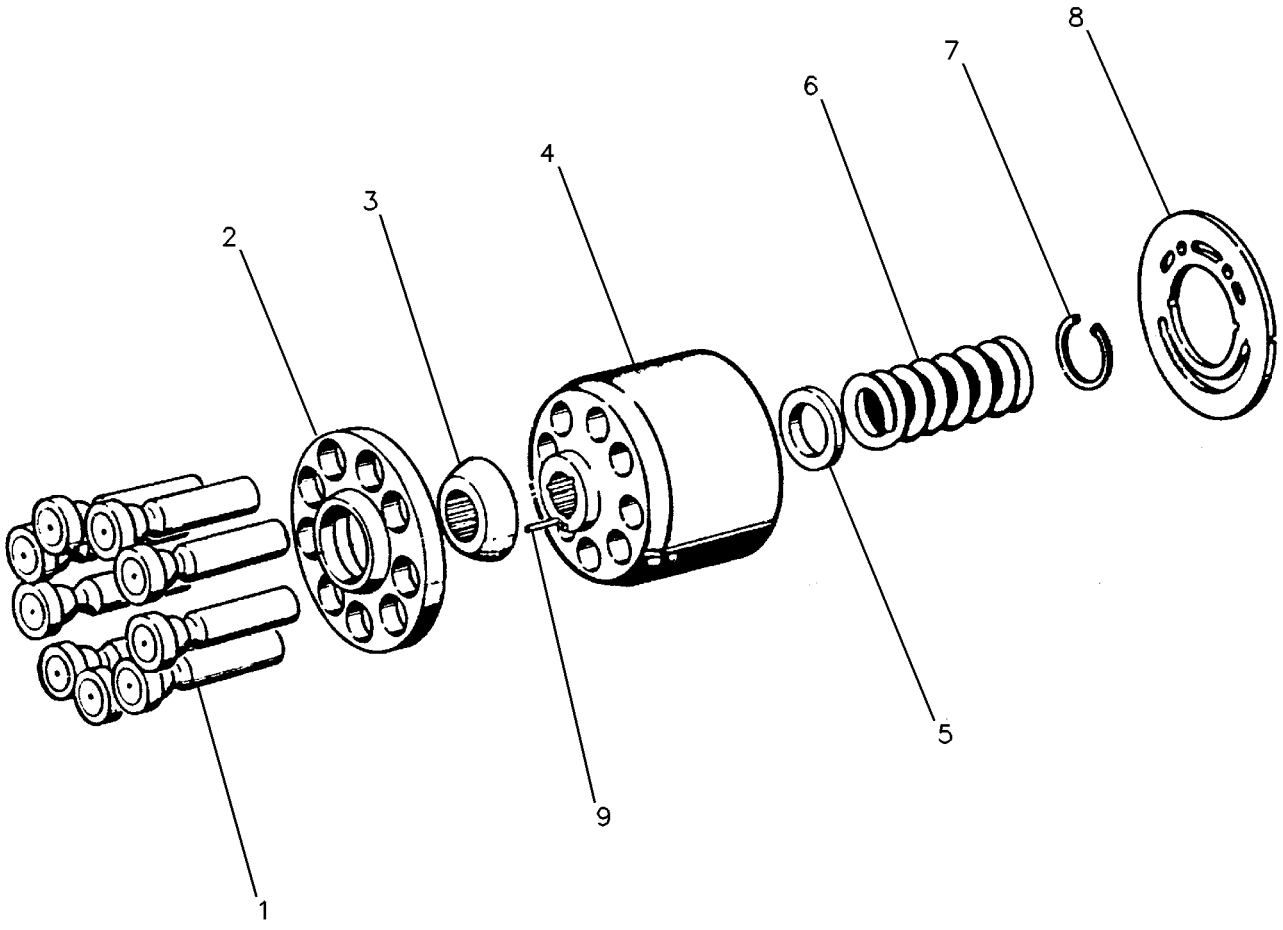


GRAPHIC #1 **<END>** g00119332

# HYDRAULIC SYSTEM

## 128-5596 SHAFT GP-POWER TAKE-OFF

**S/N: BXC1-UP; DSX1-UP**

**PART OF 112-1826 MOUNTING GP-HYDRAULIC PUMP**

**SMCS-3107** **i00535584**

| NOTE | REF NO | GRAPHIC REF | PART NUMBER | QTY | PART NAME 1 2 3 4 5 6 (PRODUCT LEVEL) | SEE PAGE |
|---|---|---|---|---|---|---|
| | 1 | 1 | **130-8150** | 1 | RING-RETAINING | |

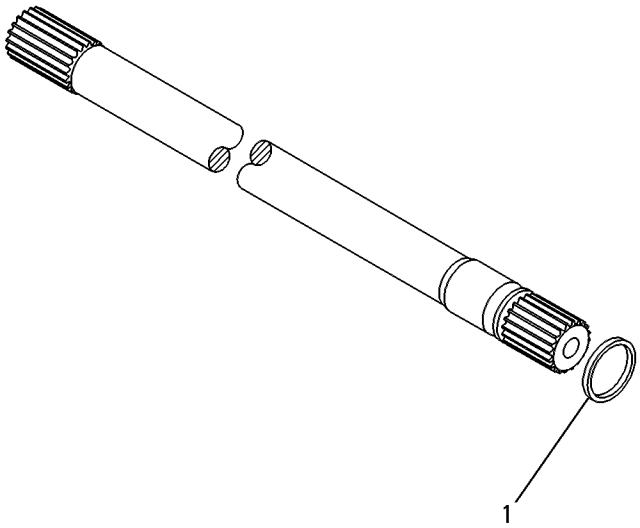


GRAPHIC #1 **<END>** g00131851

# HYDRAULIC SYSTEM

## *210-8918* STABILIZER AR

**S/N: BXC1-UP; DSX1-UP**
**AN ATTACHMENT**

**SMCS-1408, 5059, 7222** **i01854788**

| NOTE | PART NUMBER | QTY | PART NAME 1 2 3 4 5 6 (PRODUCT LEVEL) | SEE PAGE |
|---|---|---|---|---|
| Y | *228-5730* | 1 | CONTROL GP-HYDRAULIC HAND | 363 |
| | **190-5137** | 1 | FILM (STABILIZER CONTROL) | |
| Y | *186-0307* | 1 | WIRING GP-STABILIZER ALARM | 215 |

Y-SEPARATE ILLUSTRATION

**<END>**

## *210-8919* STABILIZER AR

**S/N: BXC1-UP; DSX1-UP**
**STANDARD**
**AN ATTACHMENT**

**SMCS-1408, 5059, 7222** **i01854898**

| NOTE | PART NUMBER | QTY | PART NAME 1 2 3 4 5 6 (PRODUCT LEVEL) | SEE PAGE |
|---|---|---|---|---|
| Y | *228-5731* | 1 | CONTROL GP-HYDRAULIC HAND | 364 |
| | **190-5137** | 1 | FILM (STABILIZER CONTROL) | |

Y-SEPARATE ILLUSTRATION

**<END>**

# HYDRAULIC SYSTEM

## *234-6926* TANK GP-HYDRAULIC

**S/N: BXC1-UP; DSX1-UP**

**PART OF 237-9297, 237-9298 HYDRAULIC AR**

**SMCS-5056** **i02003777**

| NOTE | REF NO | GRAPHIC REF | PART NUMBER | QTY | PART NAME 1 2 3 4 5 6 (PRODUCT LEVEL) | SEE PAGE |
|---|---|---|---|---|---|---|
| | 1 | 1 | **1P-4278** | 1 | CLAMP-HOSE | |
| | 2 | 1 | **5D-1026** | 2 | CLAMP-HOSE | |
| | 3 | 1 | **9M-0164** | 2 | CLAMP-HOSE | |
| | 4 | 1 | **9R-9925** | 1 | FILTER (HYDRAULIC TANK BREATHER) | |
| | 5 | 1 | **132-3056** | 1 | SEAL-O-RING | |
| | 6 | 1 | **222-4067** | 6 | BOLT-SOCKET HEAD (M5X.8X14MM) | |
| | 7 | 1 | **234-6927** | 1 | HOSE | |
| | 8 | 1 | **234-8815** | 1 | TUBE AS | |
| | 9 | 1 | **235-5843** | 1 | DIFFUSER AS | |
| | 10 | 1 | **237-3797** | 1 | CAP-FILL (HYDRAULIC TANK) | |
| | 11 | 1 | **240-9671** | 1 | BRACKET AS | |
| | | 1 | **7T-1099** | 3 | LINK | |
| | | 1 | **9G-9155** | 1 | CLIP | |
| | 12 | 1 | *240-9721* | 1 | TANK GP-HYDRAULIC | |
| | | 1 | **240-9716** | 1 | TANK AS-HYDRAULIC | |
| | | 1 | **170-1644** | 1 | GAUGE-SIGHT | |
| | 13 | 1 | *150-3027* | 2 | ELBOW AS | |
| | | | | | (EACH INCLUDES) | |
| | | 1 | **2M-9780** | 1 | SEAL-O-RING | |
| | | 1 | **6V-5653** | 1 | ELBOW (7/8-14 THD) | |
| | 14 | 1 | **6D-3479** | 1 | CLIP | |
| | 15 | 1 | **8T-4121** | 6 | WASHER-HARD (11X21X2.5MM THK) | |
| M | 16 | 1 | **8T-4136** | 1 | BOLT (M10X1.5X25MM) | |
| M | 17 | 1 | **8T-4137** | 1 | BOLT (M10X1.5X20MM) | |
| M | 18 | 1 | **8T-4139** | 1 | BOLT (M12X1.75X30MM) | |
| M | 19 | 1 | **8T-4179** | 3 | BOLT (M12X1.75X20MM) | |
| M | 20 | 1 | **8T-4191** | 4 | BOLT (M10X1.5X16MM) | |
| | 21 | 1 | **8T-4223** | 4 | WASHER-HARD (13.5X25.5X3MM THK) | |
| | 22 | 1 | **5P-1505** | | HOSE (8CM) | |
| | 23 | 1 | **5P-1442** | | HOSE (124CM) | |

M-METRIC PART

*234-6926* **TANK GP-HYDRAULIC** *(contd.)* **i02003777**

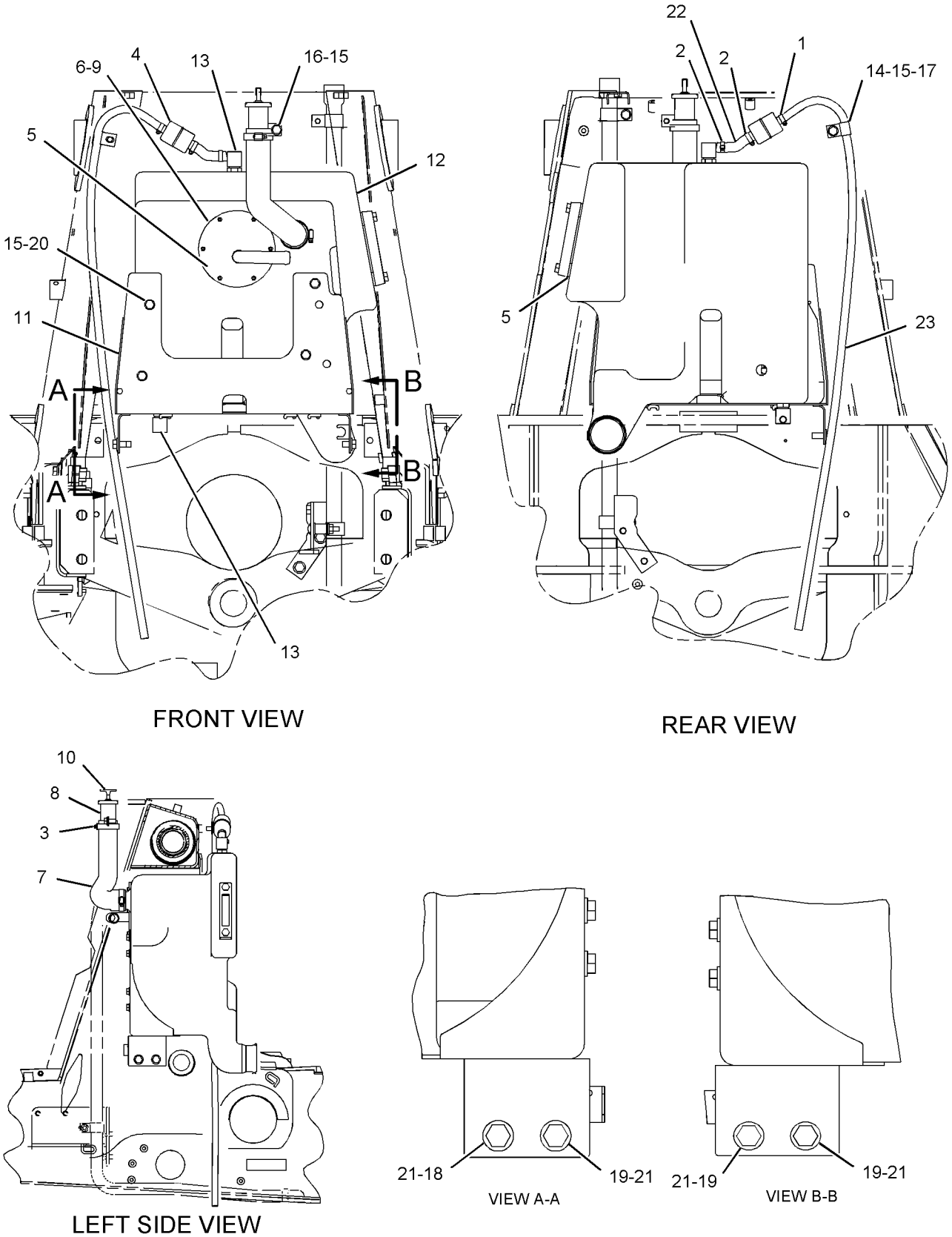


GRAPHIC #1 **<END>** g01026640

# HYDRAULIC SYSTEM

## *185-9784* VALVE & MTG GP-BANK–STABILIZER

**S/N: BXC1-UP; DSX1-UP**

**PART OF 237-9297, 237-9298 HYDRAULIC AR**

**SMCS-5051, 5057, 7265** **i01865667**

| NOTE | REF NO | GRAPHIC REF | PART NUMBER | QTY | PART NAME 1 2 3 4 5 6 (PRODUCT LEVEL) | SEE PAGE |
|---|---|---|---|---|---|---|
| | 1 | 1 | **222-0364** | 1 | VALVE GP-BANK 2 | |
| | 2 | 1 | **232-5849** | 4 | STUD-TAPERLOCK | |
| M | 3 | 1 | **5C-7261** | 4 | NUT (M8X1.25 THD) | |
| | 4 | 1 | **8T-4224** | 4 | WASHER-HARD (8.8X16X2MM THK) | |

M-METRIC PART

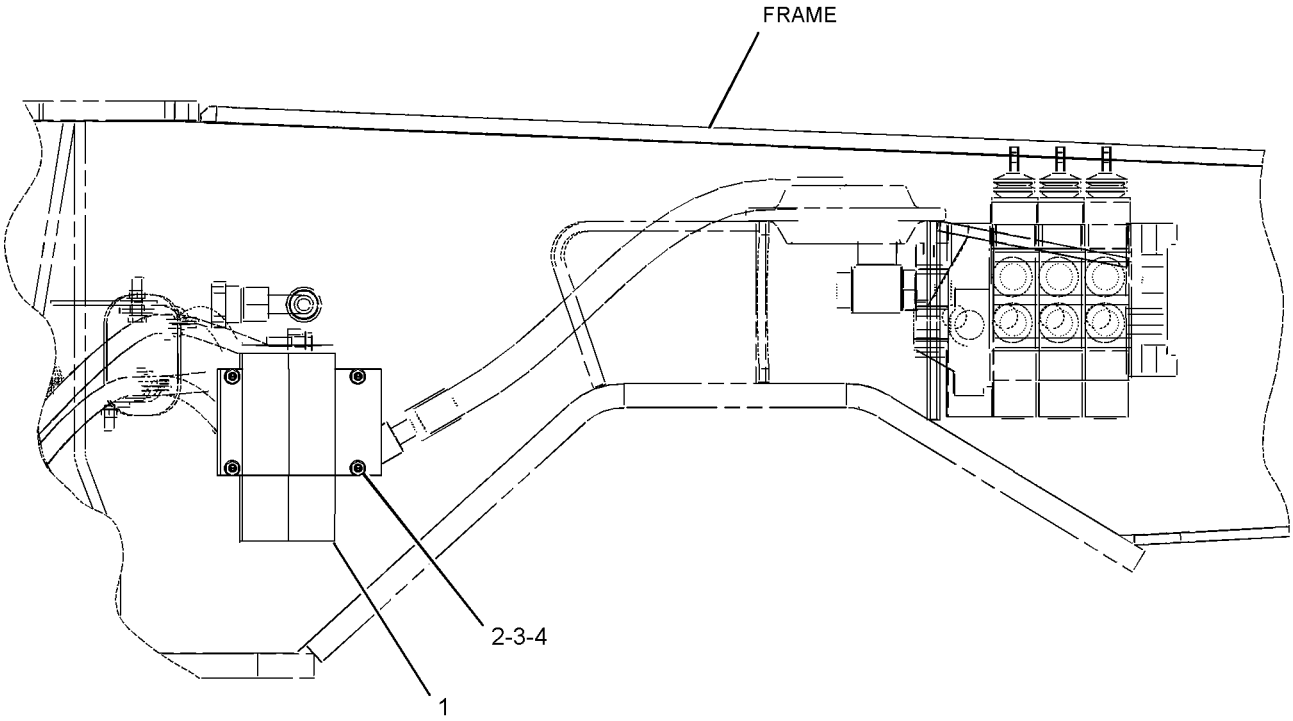


GRAPHIC #1 **<END>** g01008663

# HYDRAULIC SYSTEM

## *240-3181* VALVE AR-BANK 4

**S/N: BXC1-UP; DSX1-UP**
**AN ATTACHMENT**

**SMCS-5051** **i01971591**

| NOTE | PART NUMBER | QTY | PART NAME 1 2 3 4 5 6 (PRODUCT LEVEL) | SEE PAGE |
|---|---|---|---|---|
| Y | *236-0695* | 1 | LINES GP-PUMP | 485 |
| Y | **185-5908** | 1 | VALVE GP-BANK 4 | 551 |

Y-SEPARATE ILLUSTRATION

**<END>**

## *240-3184* VALVE AR-BANK 4

**S/N: BXC1-UP; DSX1-UP**
**AN ATTACHMENT**

**SMCS-5051** **i01971599**

| NOTE | PART NUMBER | QTY | PART NAME 1 2 3 4 5 6 (PRODUCT LEVEL) | SEE PAGE |
|---|---|---|---|---|
| Y | *235-5857* | 1 | LINES GP-PUMP | 483 |
| | **169-0599** | 1 | SWITCH AS (HYDRAULIC SHUT OFF) | |
| | **111-7899** | 1 | GASKET | |
| Y | **203-5486** | 1 | VALVE GP-BANK 4 | 552 |
| Y | **179-5593** | 1 | VALVE GP-SOLENOID | 585 |

Y-SEPARATE ILLUSTRATION

**<END>**

## *240-3182* VALVE AR-BANK 5

**S/N: BXC1-UP; DSX1-UP**
**AN ATTACHMENT**

**SMCS-5051** **i02003569**

| NOTE | PART NUMBER | QTY | PART NAME 1 2 3 4 5 6 (PRODUCT LEVEL) | SEE PAGE |
|---|---|---|---|---|
| Y | *164-1540* | 1 | CONTROL GP-HYDRAULIC PEDAL (EXTENDABLE STICK) | 365 |
| Y | *236-0695* | 1 | LINES GP-PUMP | 485 |
| Y | **185-5909** | 1 | VALVE GP-BANK 5 (SIDE SHIFT) | 553 |

Y-SEPARATE ILLUSTRATION

**<END>**

# HYDRAULIC SYSTEM

## *240-3185* VALVE AR-BANK 5

**S/N: BXC1-UP; DSX1-UP**
**AN ATTACHMENT**

**SMCS-5051** **i01971603**

| NOTE | PART NUMBER | QTY | PART NAME 1 2 3 4 5 6 (PRODUCT LEVEL) | SEE PAGE |
|---|---|---|---|---|
| Y | *164-1540* | 1 | CONTROL GP-HYDRAULIC PEDAL | 365 |
| Y | *235-5857* | 1 | LINES GP-PUMP | 483 |
| | **169-0599** | 1 | SWITCH AS (HYDRAULIC SHUT OFF) | |
| | **111-7899** | 1 | GASKET | |
| Y | **203-5487** | 1 | VALVE GP-BANK 5 | 554 |
| Y | **179-5593** | 1 | VALVE GP-SOLENOID | 585 |

Y-SEPARATE ILLUSTRATION

**<END>**

## *240-3183* VALVE AR-BANK 6

**S/N: BXC1-UP; DSX1-UP**
**AN ATTACHMENT**

**SMCS-5051** **i02003571**

| NOTE | PART NUMBER | QTY | PART NAME 1 2 3 4 5 6 (PRODUCT LEVEL) | SEE PAGE |
|---|---|---|---|---|
| Y | *164-1540* | 1 | CONTROL GP-HYDRAULIC PEDAL (EXTENDABLE STICK) | 365 |
| Y | *164-1550* | 1 | CONTROL GP-HYDRAULIC PEDAL (AUXILLIARY) | 367 |
| Y | *235-5855* | 1 | LINES GP-PUMP | 482 |
| | *148-8408* | 2 | PLUG AS | |
| | | | (EACH INCLUDES) | |
| | **3D-2824** | 1 | SEAL-O-RING | |
| | **9S-4183** | 1 | PLUG | |
| Y | **185-5910** | 1 | VALVE GP-BANK 6 (SIDE SHIFT) | 556 |

Y-SEPARATE ILLUSTRATION

**<END>**

## *240-3186* VALVE AR-BANK 6

**S/N: BXC1-UP; DSX1-UP**
**AN ATTACHMENT**

**SMCS-5051** **i02003573**

| NOTE | PART NUMBER | QTY | PART NAME 1 2 3 4 5 6 (PRODUCT LEVEL) | SEE PAGE |
|---|---|---|---|---|
| Y | *164-1540* | 1 | CONTROL GP-HYDRAULIC PEDAL (EXTENDABLE STICK) | 365 |
| Y | *164-1550* | 1 | CONTROL GP-HYDRAULIC PEDAL (AUXILIARY) | 367 |
| Y | *235-5858* | 1 | LINES GP-PUMP | 484 |
| | *148-8408* | 2 | PLUG AS | |
| | | | (EACH INCLUDES) | |
| | **3D-2824** | 1 | SEAL-O-RING | |
| | **9S-4183** | 1 | PLUG | |
| | **169-0599** | 1 | SWITCH AS (HYDRAULIC SHUT OFF) | |
| | **111-7899** | 1 | GASKET | |
| Y | **203-5488** | 1 | VALVE GP-BANK 6 | 557 |
| Y | **179-5593** | 1 | VALVE GP-SOLENOID | 585 |

Y-SEPARATE ILLUSTRATION

**<END>**

## *204-9195* VALVE GP-AUXILIARY–KIT

**S/N: BXC1-UP; DSX1-UP**
**FOUR TO FIVE BANK, STANDARD FRAME, WITH SHUTOFF (TUV)**
**AN ATTACHMENT**

**SMCS-5051** **i01670124**

| NOTE | PART NUMBER | QTY | PART NAME 1 2 3 4 5 6 (PRODUCT LEVEL) | SEE PAGE |
|---|---|---|---|---|
| Y | *164-1540* | 1 | CONTROL GP-HYDRAULIC PEDAL | 365 |
| Y | **190-3450** | 1 | VALVE GP-CONTROL | 565 |
| | **168-8186** | 1 | HOSE AS | |
| | **4D-9986** | 2 | SEAL-O-RING | |
| | **4J-5140** | 1 | SEAL-O-RING | |
| | **4J-5267** | 1 | SEAL-O-RING | |
| B | **4T-2723** | 3 | SHIM (0.076MM THK) | |
| | **118-2228** | 3 | STUD | |

B-USE AS REQUIRED
Y-SEPARATE ILLUSTRATION

**<END>**

## *204-9196* VALVE GP-AUXILIARY–KIT

**S/N: BXC1-UP; DSX1-UP**
**FOUR TO FIVE BANK, NARROW FRAME, WITH SHUTOFF VALVE (TUV), KIT-AUXILIARY VALVE**
**AN ATTACHMENT**

**SMCS-5051** **i01502339**

| NOTE | PART NUMBER | QTY | PART NAME 1 2 3 4 5 6 (PRODUCT LEVEL) | SEE PAGE |
|---|---|---|---|---|
| Y | *164-1540* | 1 | CONTROL GP-HYDRAULIC PEDAL | 365 |
| | **183-8521** | 1 | HOSE AS | |
| | **4D-9986** | 2 | SEAL-O-RING | |
| | **4J-5140** | 1 | SEAL-O-RING | |
| | **4J-5267** | 1 | SEAL-O-RING | |
| | **4T-2723** | 3 | SHIM (0.076MM THK) | |
| | **118-2228** | 3 | STUD | |
| Y | **190-3450** | 1 | VALVE GP-CONTROL | 565 |

Y-SEPARATE ILLUSTRATION

**<END>**

## *204-9197* VALVE GP-AUXILIARY–KIT

**S/N: BXC1-UP; DSX1-UP**
**FIVE TO SIX BANK, ALL FRAMES, WITH SHUTOFF (TUV)**
**AN ATTACHMENT**

**SMCS-5051** **i01670126**

| NOTE | PART NUMBER | QTY | PART NAME 1 2 3 4 5 6 (PRODUCT LEVEL) | SEE PAGE |
|---|---|---|---|---|
| Y | *164-1550* | 1 | CONTROL GP-HYDRAULIC PEDAL | 367 |
| Y | **190-3450** | 1 | VALVE GP-CONTROL | 565 |
| | **4D-9986** | 2 | SEAL-O-RING | |
| | **4J-5140** | 1 | SEAL-O-RING | |
| | **4J-5267** | 1 | SEAL-O-RING | |
| B | **4T-2723** | 3 | SHIM (0.076MM THK) | |
| | **9T-0637** | 3 | STUD | |
| | *148-8431* | 1 | TEE GP | |
| | **5K-9090** | 2 | SEAL-O-RING | |
| | **6V-8785** | 1 | TEE | |
| | **7M-8485** | 1 | SEAL-O-RING | |

B-USE AS REQUIRED
Y-SEPARATE ILLUSTRATION

**<END>**

## *204-9198* VALVE GP-AUXILIARY–KIT

**S/N: BXC1-UP; DSX1-UP**
**FOUR TO FIVE BANK, WITHOUT SHUTOFF (TUV), STANDARD FRAME**
**AN ATTACHMENT**

**SMCS-5051** **i01670182**

| NOTE | PART NUMBER | QTY | PART NAME 1 2 3 4 5 6 (PRODUCT LEVEL) | SEE PAGE |
|---|---|---|---|---|
| Y | *164-1540* | 1 | CONTROL GP-HYDRAULIC PEDAL | 365 |
| Y | **190-3450** | 1 | VALVE GP-CONTROL | 565 |
| | **168-8186** | 1 | HOSE AS | |
| | **4D-9986** | 2 | SEAL-O-RING | |
| | **4J-5140** | 1 | SEAL-O-RING | |
| | **4J-5267** | 1 | SEAL-O-RING | |
| B | **4T-2723** | 3 | SHIM (0.076MM THK) | |
| | **107-8117** | 3 | STUD | |

B-USE AS REQUIRED
Y-SEPARATE ILLUSTRATION

**<END>**

## *204-9199* VALVE GP-AUXILIARY–KIT

**S/N: BXC1-UP; DSX1-UP**
**FOUR TO FIVE BANK, NARROW FRAME, WITHOUT SHUTOFF VALVE (TUV), KIT-AUXILIARY VALVE**
**AN ATTACHMENT**

**SMCS-5051** **i01502299**

| NOTE | PART NUMBER | QTY | PART NAME 1 2 3 4 5 6 (PRODUCT LEVEL) | SEE PAGE |
|---|---|---|---|---|
| Y | *164-1540* | 1 | CONTROL GP-HYDRAULIC PEDAL | 365 |
| | **183-8521** | 1 | HOSE AS | |
| | **4D-9986** | 2 | SEAL-O-RING | |
| | **4J-5140** | 1 | SEAL-O-RING | |
| | **4J-5267** | 1 | SEAL-O-RING | |
| | **4T-2723** | 3 | SHIM (0.076MM THK) | |
| | **107-8117** | 3 | STUD | |
| Y | **190-3450** | 1 | VALVE GP-CONTROL | 565 |

Y-SEPARATE ILLUSTRATION

**<END>**

## *204-9200* VALVE GP-AUXILIARY–KIT

**S/N: BXC1-UP; DSX1-UP**
**FIVE TO SIX BANK, ALL FRAMES, WITHOUT SHUTOFF (TUV)**
**AN ATTACHMENT**

**SMCS-5051** **i01670185**

| NOTE | PART NUMBER | QTY | PART NAME 1 2 3 4 5 6 (PRODUCT LEVEL) | SEE PAGE |
|---|---|---|---|---|
| Y | *164-1550* | 1 | CONTROL GP-HYDRAULIC PEDAL | 367 |
| Y | **190-3450** | 1 | VALVE GP-CONTROL | 565 |
| | **4D-9986** | 2 | SEAL-O-RING | |
| | **4J-5140** | 1 | SEAL-O-RING | |
| | **4J-5267** | 1 | SEAL-O-RING | |
| B | **4T-2723** | 3 | SHIM (0.076MM THK) | |
| | **116-1316** | 3 | STUD | |
| | *148-8431* | 1 | TEE GP | |
| | **5K-9090** | 2 | SEAL-O-RING | |
| | **6V-8785** | 1 | TEE | |
| | **7M-8485** | 1 | SEAL-O-RING | |

B-USE AS REQUIRED
Y-SEPARATE ILLUSTRATION

**<END>**

# HYDRAULIC SYSTEM

## 185-5911 VALVE GP-BANK 2–LOADER

**S/N: BXC1-UP; DSX1-UP**
**PART OF 186-5335, 186-5336 HYDRAULIC AR**
**AN ATTACHMENT**

**SMCS-5051** **i02003574**

| NOTE | REF NO | GRAPHIC REF | PART NUMBER | QTY | PART NAME 1 2 3 4 5 6 (PRODUCT LEVEL) | SEE PAGE |
|---|---|---|---|---|---|---|
| Y | 1 | 1 | **188-7471** | 1 | VALVE GP-PRIORITY | 305 |
| | 2 | 1 | **191-4010** | 1 | COVER GP | |
| Y | 3 | 1 | **130-6520** | 1 | VALVE GP-CONTROL (LIFT) | 561 |
| Y | 4 | 1 | **191-4012** | 1 | VALVE GP-CONTROL (TILT) (TILT) | 567 |
| | 5 | 1 | **5M-2894** | 3 | WASHER-HARD (10.2X18.5X2.5MM THK) | |
| | 6 | 1 | **9S-8752** | 3 | NUT-FULL (3/8-16 THD) | |
| | 7 | 1 | **4T-4538** | 3 | STUD | |
| | 8 | 1 | **4D-9986** | 6 | SEAL-O-RING | |
| | 9 | 1 | **4J-5140** | 3 | SEAL-O-RING | |
| | 10 | 1 | **4J-5267** | 3 | SEAL-O-RING | |
| | 11 | 1 | **4T-2723** | 9 | SHIM (0.076MM THK) | |

Y-SEPARATE ILLUSTRATION

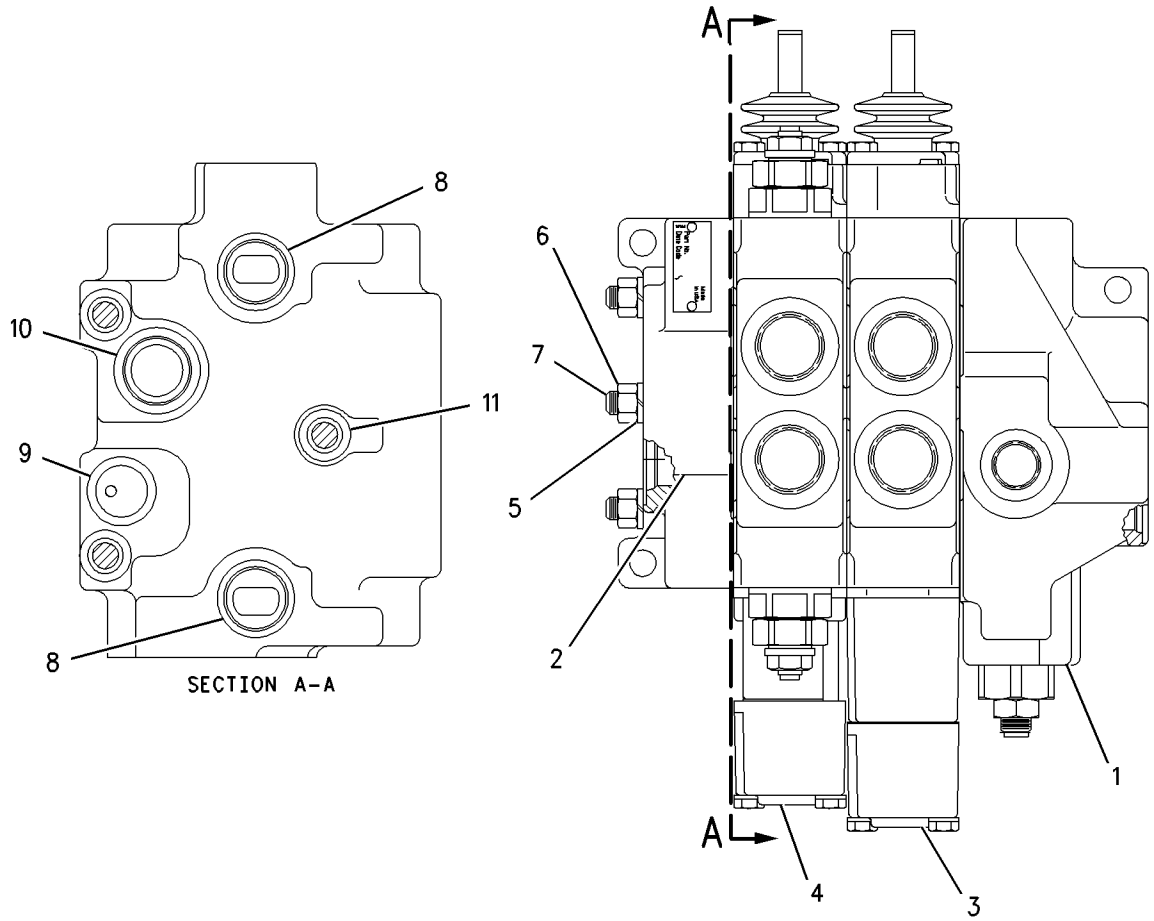


GRAPHIC #1 **<END>** g00738121

# HYDRAULIC SYSTEM

## 185-5913 VALVE GP-BANK 2–LOADER

**S/N: BXC1-UP; DSX1-UP**
**PART OF 185-0060, 185-0061 HYDRAULIC AR**
**AN ATTACHMENT**

**SMCS-5051** **i02003576**

| NOTE | REF NO | GRAPHIC REF | PART NUMBER | QTY | PART NAME 1 2 3 4 5 6 (PRODUCT LEVEL) | SEE PAGE |
|---|---|---|---|---|---|---|
| Y | 1 | 1 | **188-7471** | 1 | VALVE GP-PRIORITY | 305 |
| | 2 | 1 | **191-4010** | 1 | COVER GP | |
| Y | 3 | 1 | **130-6520** | 1 | VALVE GP-CONTROL (LIFT) | 561 |
| Y | 4 | 1 | **191-4032** | 1 | VALVE GP-CONTROL (TILT) | 569 |
| | 5 | 1 | **5M-2894** | 3 | WASHER-HARD (10.2X18.5X2.5MM THK) | |
| | 6 | 1 | **9S-8752** | 3 | NUT-FULL (3/8-16 THD) | |
| | 7 | 1 | **4T-4538** | 3 | STUD | |
| | 8 | 1 | **4D-9986** | 6 | SEAL-O-RING | |
| | 9 | 1 | **4J-5140** | 3 | SEAL-O-RING | |
| | 10 | 1 | **4J-5267** | 3 | SEAL-O-RING | |
| B | 11 | 1 | **4T-2723** | 9 | SHIM (0.076MM THK) | |

B-USE AS REQUIRED
Y-SEPARATE ILLUSTRATION

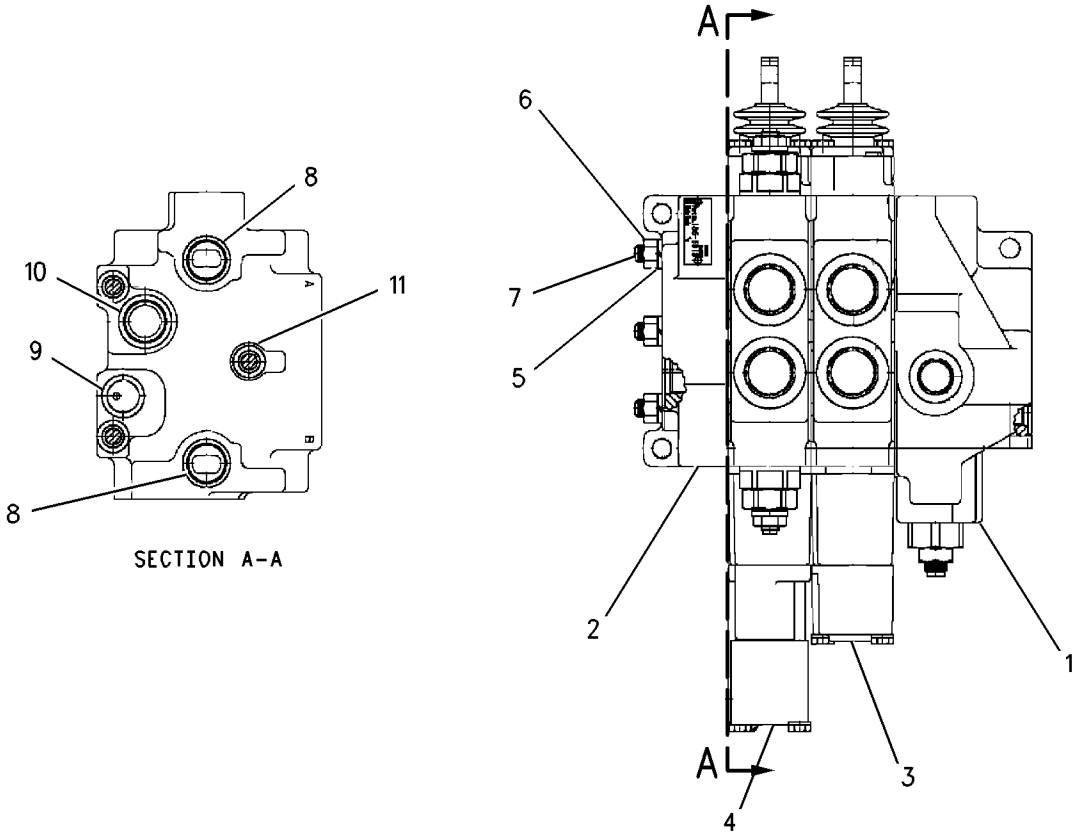


GRAPHIC #1 **<END>** g00739064

# HYDRAULIC SYSTEM

## 185-5912 VALVE GP-BANK 3–LOADER

**S/N: BXC1-UP; DSX1-UP**
**PART OF 186-5337, 186-5338 HYDRAULIC AR**
**AN ATTACHMENT**

**SMCS-5051** **i02003577**

| NOTE | REF NO | GRAPHIC REF | PART NUMBER | QTY | PART NAME 1 2 3 4 5 6 (PRODUCT LEVEL) | SEE PAGE |
|---|---|---|---|---|---|---|
| Y | 1 | 1 | **188-7471** | 1 | VALVE GP-PRIORITY | 305 |
| | 2 | 1 | **191-4010** | 1 | COVER GP | |
| Y | 3 | 1 | **130-6520** | 1 | VALVE GP-CONTROL (LIFT) | 561 |
| Y | 4 | 1 | **191-4012** | 1 | VALVE GP-CONTROL (TILT) (TILT) | 567 |
| Y | 5 | 1 | **124-8818** | 1 | VALVE GP-CONTROL (AUXILIARY) | 559 |
| | 6 | 1 | **5M-2894** | 3 | WASHER-HARD (10.2X18.5X2.5MM THK) | |
| | 7 | 1 | **9S-8752** | 3 | NUT-FULL (3/8-16 THD) | |
| | 8 | 1 | **4T-4518** | 3 | STUD | |
| | 9 | 1 | **4D-9986** | 8 | SEAL-O-RING | |
| | 10 | 1 | **4J-5140** | 4 | SEAL-O-RING | |
| | 11 | 1 | **4J-5267** | 4 | SEAL-O-RING | |
| B | 12 | 1 | **4T-2723** | 12 | SHIM (0.076MM THK) | |

B-USE AS REQUIRED
Y-SEPARATE ILLUSTRATION

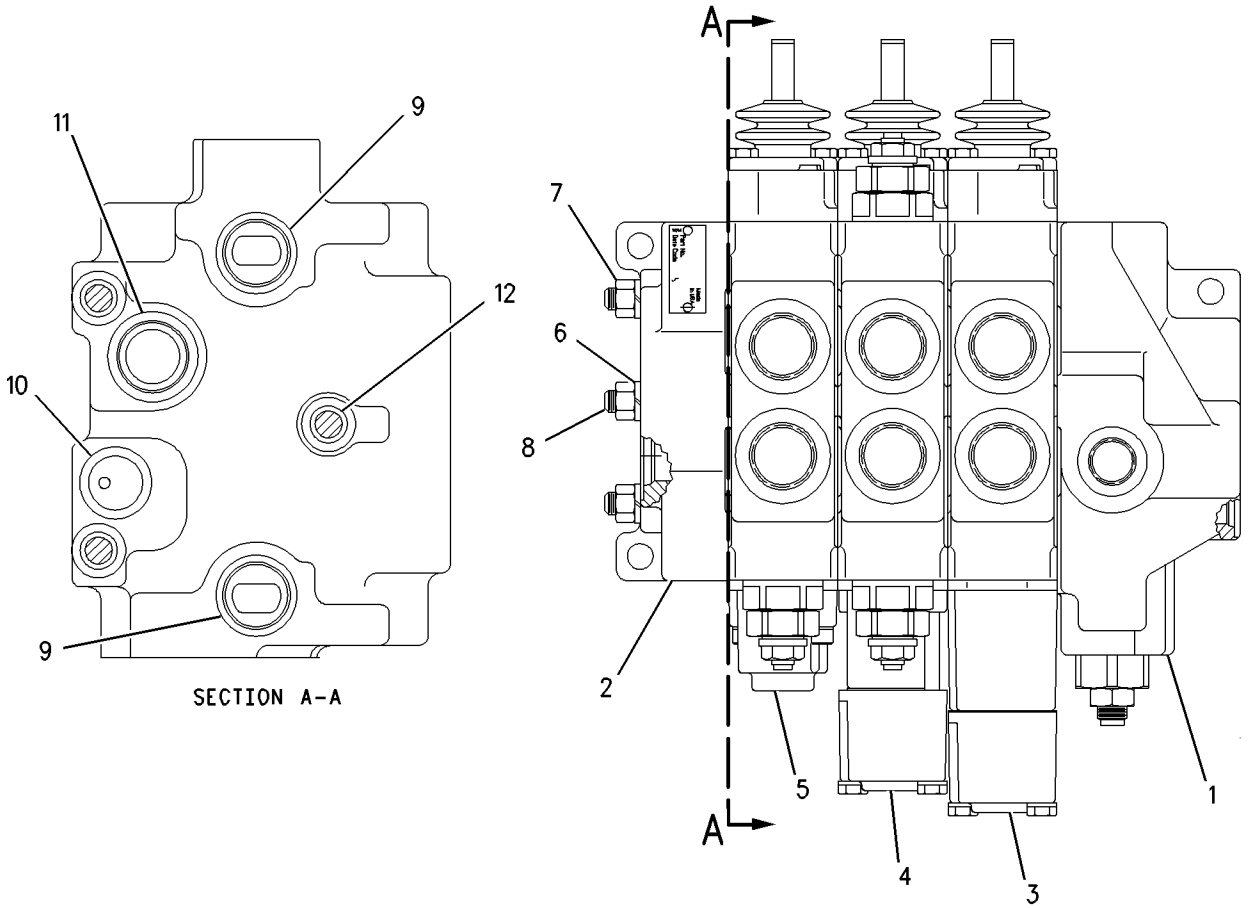


GRAPHIC #1 **<END>** g00738125

# HYDRAULIC SYSTEM

## *185-5914* VALVE GP-BANK 3–BACKHOE

**S/N: BXC1-UP; DSX1-UP**
**PART OF 185-0062, 185-0063 HYDRAULIC AR**
**AN ATTACHMENT**

**SMCS-5051** **i02003578**

| NOTE | REF NO | GRAPHIC REF | PART NUMBER | QTY | PART NAME 1 2 3 4 5 6 (PRODUCT LEVEL) | SEE PAGE |
|---|---|---|---|---|---|---|
| Y | 1 | 1 | **188-7471** | 1 | VALVE GP-PRIORITY | 305 |
| | 2 | 1 | **191-4010** | 1 | COVER GP | |
| Y | 3 | 1 | **130-6520** | 1 | VALVE GP-CONTROL (LIFT) | 561 |
| Y | 4 | 1 | **191-4032** | 1 | VALVE GP-CONTROL (TILT) | 569 |
| Y | 5 | 1 | **191-4035** | 1 | VALVE GP-CONTROL (LIFT) | 571 |
| | 6 | 1 | **5M-2894** | 3 | WASHER-HARD (10.2X18.5X2.5MM THK) | |
| | 7 | 1 | **9S-8752** | 3 | NUT-FULL (3/8-16 THD) | |
| | 8 | 1 | **4T-4518** | 3 | STUD | |
| | 9 | 1 | **4D-9986** | 8 | SEAL-O-RING | |
| | 10 | 1 | **4J-5140** | 4 | SEAL-O-RING | |
| | 11 | 1 | **4J-5267** | 4 | SEAL-O-RING | |
| | 12 | 1 | **4T-2723** | 12 | SHIM (0.076MM THK) | |

Y-SEPARATE ILLUSTRATION

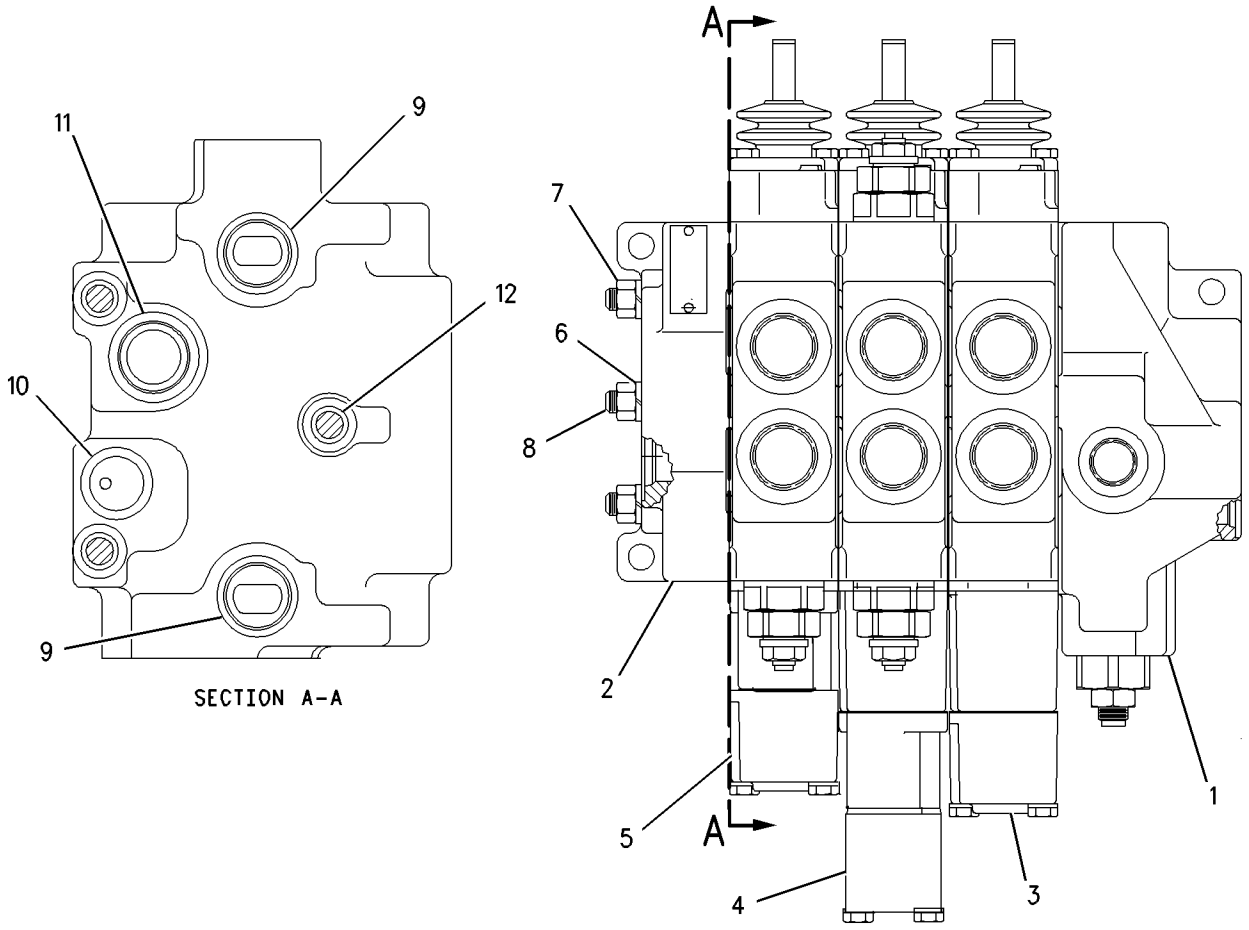


GRAPHIC #1 **<END>** g00844428

# HYDRAULIC SYSTEM

## 185-5908 VALVE GP-BANK 4—BACKHOE—SIDE SHIFT

**S/N: BXC1-UP; DSX1-UP**
**PART OF 240-3181 VALVE AR-BANK 4**
**AN ATTACHMENT**

**SMCS-5051** **i02003582**

| NOTE | REF NO | GRAPHIC REF | PART NUMBER | QTY | PART NAME 1 2 3 4 5 6 (PRODUCT LEVEL) | SEE PAGE |
|---|---|---|---|---|---|---|
| | 1 | 1 | **200-0161** | 1 | COVER | |
| | 2 | 1 | **193-9189** | 1 | COVER AS | |
| | | 1 | **5B-9318** | 1 | BALL | |
| | | 1 | **197-2969** | 1 | SEAT AS | |
| Y | 3 | 1 | **204-0532** | 1 | VALVE GP-CONTROL (BOOM) | 575 |
| Y | 4 | 1 | **166-7950** | 1 | VALVE GP-CONTROL (SWING) | 563 |
| Y | 5 | 1 | **193-3124** | 1 | VALVE GP-CONTROL (BUCKET) | 573 |
| Y | 6 | 1 | **204-0533** | 1 | VALVE GP-CONTROL (STICK) | 577 |
| | 7 | 1 | **5M-2894** | 6 | WASHER-HARD (10.2X18.5X2.5MM THK) | |
| | 8 | 1 | **9S-8752** | 6 | NUT-FULL (3/8-16 THD) | |
| | 9 | 1 | **4T-4218** | 3 | STUD | |
| | 10 | 1 | **4D-9986** | 10 | SEAL-O-RING | |
| | 11 | 1 | **4J-5140** | 5 | SEAL-O-RING | |
| | 12 | 1 | **4J-5267** | 5 | SEAL-O-RING | |
| B | 13 | 1 | **4T-2723** | 15 | SHIM (0.076MM THK) | |

B-USE AS REQUIRED
Y-SEPARATE ILLUSTRATION

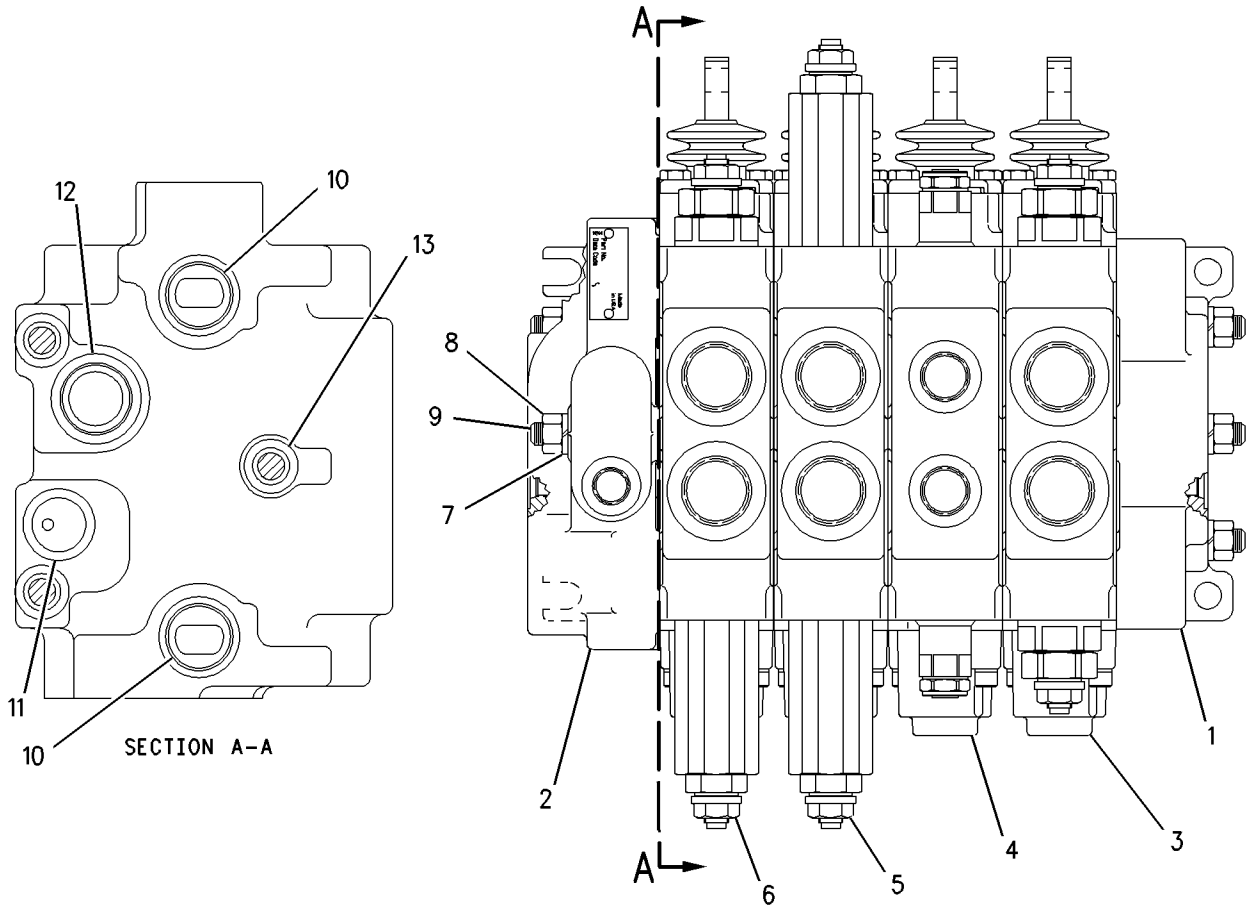


GRAPHIC #1 **<END>** g00754187

# HYDRAULIC SYSTEM

## 203-5486 VALVE GP-BANK 4—BACKHOE

**S/N: BXC1-UP; DSX1-UP**
**PART OF 240-3184 VALVE AR-BANK 4**
**AN ATTACHMENT**

**SMCS-5051** **i02003592**

| NOTE | REF NO | GRAPHIC REF | PART NUMBER | QTY | PART NAME 1 2 3 4 5 6 (PRODUCT LEVEL) | SEE PAGE |
|---|---|---|---|---|---|---|
| Y | 1 | 1 | **202-2236** | 1 | COVER & VALVE GP-BANK | 371 |
| | 2 | 1 | **193-9189** | 1 | COVER AS | |
| | | 1 | **5B-9318** | 1 | BALL | |
| | | 1 | **197-2969** | 1 | SEAT AS | |
| Y | 3 | 1 | **204-0532** | 1 | VALVE GP-CONTROL (BOOM) | 575 |
| Y | 4 | 1 | **166-7950** | 1 | VALVE GP-CONTROL (SWING) | 563 |
| Y | 5 | 1 | **193-3124** | 1 | VALVE GP-CONTROL (BUCKET) | 573 |
| Y | 6 | 1 | **204-0533** | 1 | VALVE GP-CONTROL (STICK) | 577 |
| | 7 | 1 | **5M-2894** | 3 | WASHER-HARD (10.2X18.5X2.5MM THK) | |
| | 8 | 1 | **9S-8752** | 3 | NUT-FULL (3/8-16 THD) | |
| | 9 | 1 | **4T-4517** | 3 | STUD | |
| | 10 | 1 | **4D-9986** | 10 | SEAL-O-RING | |
| | 11 | 1 | **4J-5140** | 5 | SEAL-O-RING | |
| | 12 | 1 | **4J-5267** | 5 | SEAL-O-RING | |
| | 13 | 1 | **4T-2723** | 15 | SHIM (0.076MM THK) | |

Y-SEPARATE ILLUSTRATION

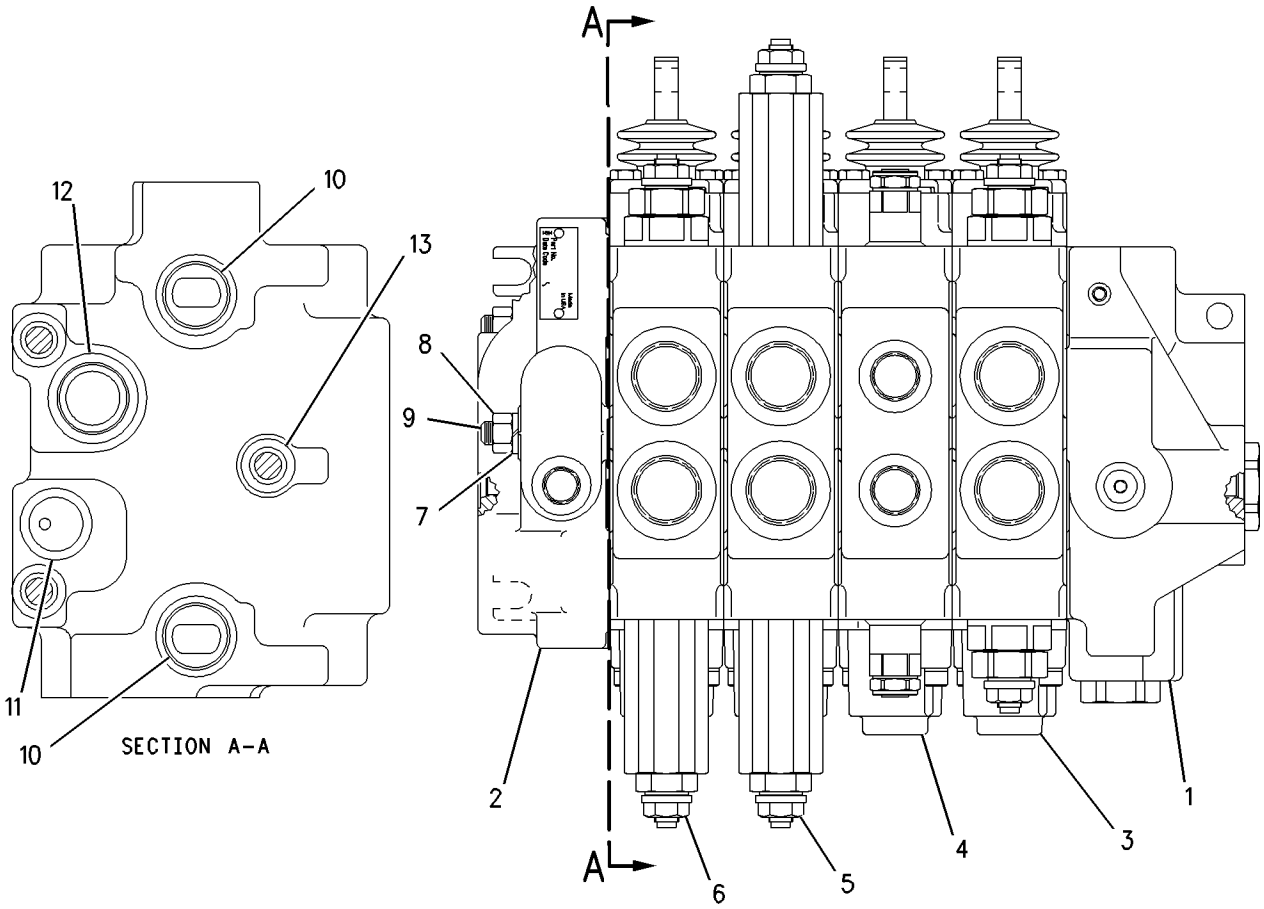


GRAPHIC #1 **<END>** g00754188

# HYDRAULIC SYSTEM

## 185-5909 VALVE GP-BANK 5—BACKHOE—SIDE SHIFT

**S/N: BXC1-UP; DSX1-UP**
**PART OF 240-3182 VALVE AR-BANK 5**
**AN ATTACHMENT**

**SMCS-5051** **i02003593**

| NOTE | REF NO | GRAPHIC REF | PART NUMBER | QTY | PART NAME 1 2 3 4 5 6 (PRODUCT LEVEL) | SEE PAGE |
|---|---|---|---|---|---|---|
| | 1 | 1 | **200-0161** | 1 | COVER | |
| | 2 | 1 | **193-9189** | 1 | COVER AS | |
| | | 1 | **5B-9318** | 1 | BALL | |
| | | 1 | **197-2969** | 1 | SEAT AS | |
| Y | 3 | 1 | **204-0532** | 1 | VALVE GP-CONTROL (BOOM) | 575 |
| Y | 4 | 1 | **166-7950** | 1 | VALVE GP-CONTROL (SWING) | 563 |
| Y | 5 | 1 | **193-3124** | 2 | VALVE GP-CONTROL (BUCKET) | 573 |
| Y | 6 | 1 | **204-0533** | 1 | VALVE GP-CONTROL (STICK) | 577 |
| Y | 7 | 1 | **190-3450** | 1 | VALVE GP-CONTROL (AUXILIARY) | 565 |
| | 8 | 1 | **5M-2894** | 6 | WASHER-HARD (10.2X18.5X2.5MM THK) | |
| | 9 | 1 | **9S-8752** | 6 | NUT-FULL (3/8-16 THD) | |
| | 10 | 1 | **107-8117** | 3 | STUD | |
| | 11 | 1 | **4D-9986** | 12 | SEAL-O-RING | |
| | 12 | 1 | **4J-5140** | 6 | SEAL-O-RING | |
| | 13 | 1 | **4J-5267** | 6 | SEAL-O-RING | |
| | 14 | 1 | **4T-2723** | 18 | SHIM (0.076MM THK) | |

Y-SEPARATE ILLUSTRATION

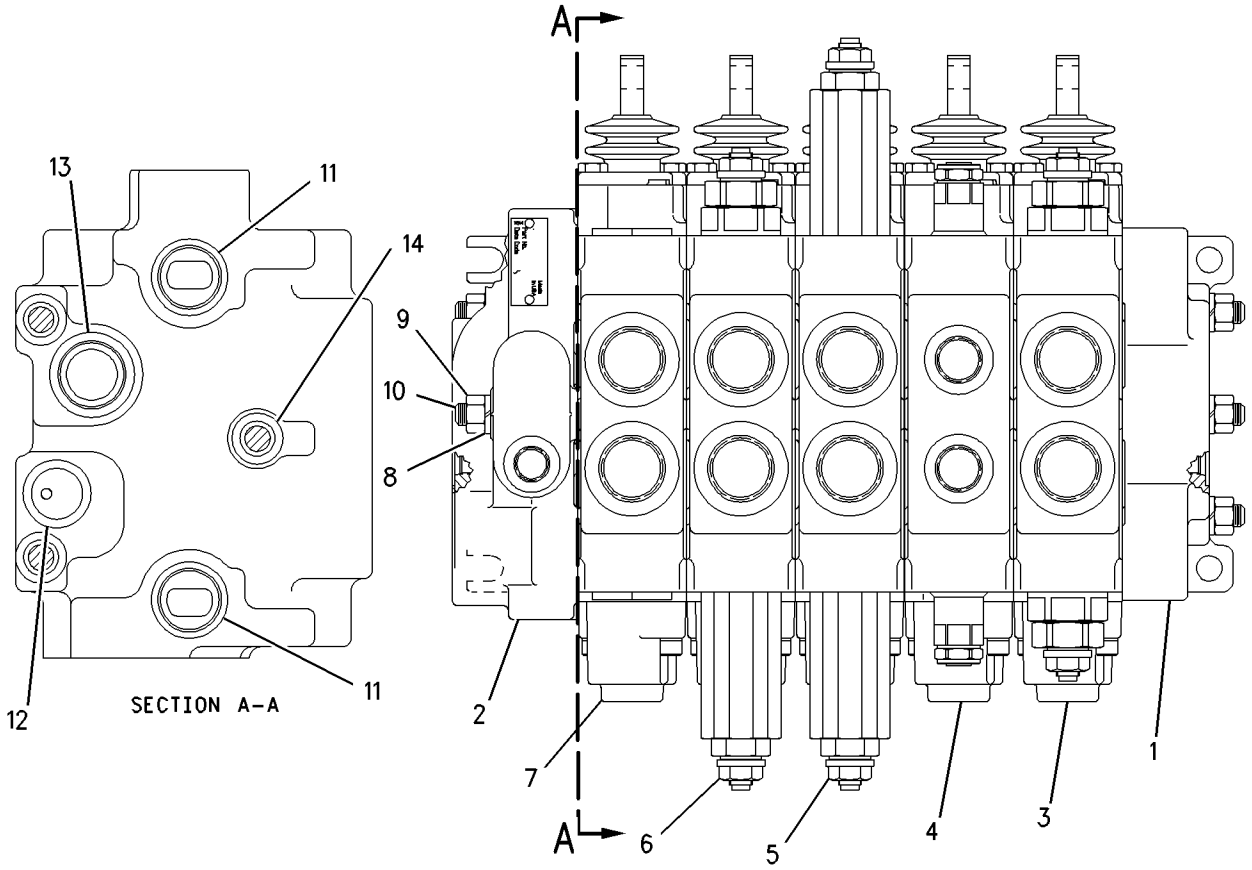


GRAPHIC #1 **<END>** g00750932

# HYDRAULIC SYSTEM

## 203-5487 VALVE GP-BANK 5—BACKHOE

**S/N: BXC1-UP; DSX1-UP**
**PART OF 240-3185 VALVE AR-BANK 5**
**AN ATTACHMENT**

**SMCS-5051** **i02003596**

| NOTE | REF NO | GRAPHIC REF | PART NUMBER | QTY | PART NAME 1 2 3 4 5 6 (PRODUCT LEVEL) | SEE PAGE |
|---|---|---|---|---|---|---|
| Y | 1 | 1 | **202-2236** | 1 | COVER & VALVE GP-BANK | 371 |
| | 2 | 1 | **193-9189** | 1 | COVER AS | |
| | | 1 | **5B-9318** | 1 | BALL | |
| | | 1 | **197-2969** | 1 | SEAT AS | |
| Y | 3 | 1 | **204-0532** | 1 | VALVE GP-CONTROL (BOOM) | 575 |
| Y | 4 | 1 | **166-7950** | 1 | VALVE GP-CONTROL (SWING) | 563 |
| Y | 5 | 1 | **193-3124** | 2 | VALVE GP-CONTROL (BUCKET) | 573 |
| Y | 6 | 1 | **204-0533** | 1 | VALVE GP-CONTROL (STICK) | 577 |
| Y | 7 | 1 | **190-3450** | 1 | VALVE GP-CONTROL (AUXILIARY) | 565 |
| | 8 | 1 | **5M-2894** | 3 | WASHER-HARD (10.2X18.5X2.5MM THK) | |
| | 9 | 1 | **9S-8752** | 3 | NUT-FULL (3/8-16 THD) | |
| | 10 | 1 | **118-2228** | 3 | STUD | |
| | 11 | 1 | **4D-9986** | 12 | SEAL-O-RING | |
| | 12 | 1 | **4J-5140** | 6 | SEAL-O-RING | |
| | 13 | 1 | **4J-5267** | 6 | SEAL-O-RING | |
| B | 14 | 1 | **4T-2723** | 18 | SHIM (0.076MM THK) | |

B-USE AS REQUIRED
Y-SEPARATE ILLUSTRATION

**203-5487 VALVE GP-BANK 5** *(contd.)* **i02003596**

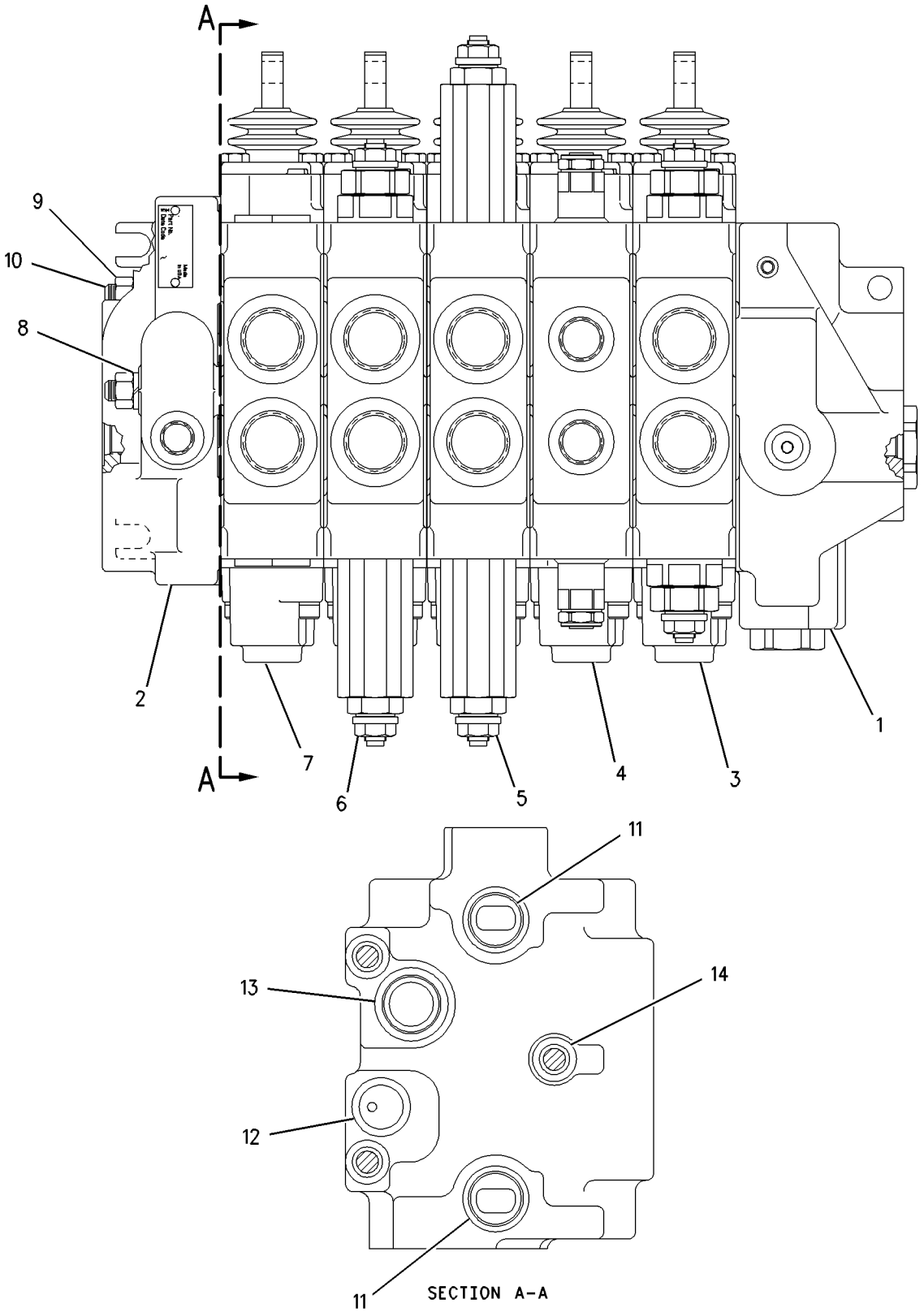


GRAPHIC #1 **<END>** g00751192

# HYDRAULIC SYSTEM

## 185-5910 VALVE GP-BANK 6—BACKHOE —SIDE SHIFT

**S/N: BXC1-UP; DSX1-UP**
**PART OF 240-3183 VALVE AR-BANK 6**
**AN ATTACHMENT**

**SMCS-5051** **i02003598**

| NOTE | REF NO | GRAPHIC REF | PART NUMBER | QTY | PART NAME 1 2 3 4 5 6 (PRODUCT LEVEL) | SEE PAGE |
|---|---|---|---|---|---|---|
| | 1 | 1 | **200-0161** | 1 | COVER | |
| | 2 | 1 | **193-9189** | 1 | COVER AS | |
| | | 1 | **5B-9318** | 1 | BALL | |
| | | 1 | **197-2969** | 1 | SEAT AS | |
| Y | 3 | 1 | **190-3450** | 2 | VALVE GP-CONTROL (AUXILIARY) | 565 |
| Y | 4 | 1 | **204-0532** | 1 | VALVE GP-CONTROL (BOOM) | 575 |
| Y | 5 | 1 | **166-7950** | 1 | VALVE GP-CONTROL (SWING) | 563 |
| Y | 6 | 1 | **193-3124** | 1 | VALVE GP-CONTROL (BUCKET) | 573 |
| Y | 7 | 1 | **204-0533** | 1 | VALVE GP-CONTROL (STICK) | 577 |
| | 8 | 1 | **5M-2894** | 6 | WASHER-HARD (10.2X18.5X2.5MM THK) | |
| | 9 | 1 | **9S-8752** | 6 | NUT-FULL (3/8-16 THD) | |
| | 10 | 1 | **116-1316** | 3 | STUD | |
| | 11 | 1 | **4D-9986** | 14 | SEAL-O-RING | |
| | 12 | 1 | **4J-5140** | 7 | SEAL-O-RING | |
| | 13 | 1 | **4J-5267** | 7 | SEAL-O-RING | |
| B | 14 | 1 | **4T-2723** | 21 | SHIM (0.076MM THK) | |

B-USE AS REQUIRED
Y-SEPARATE ILLUSTRATION

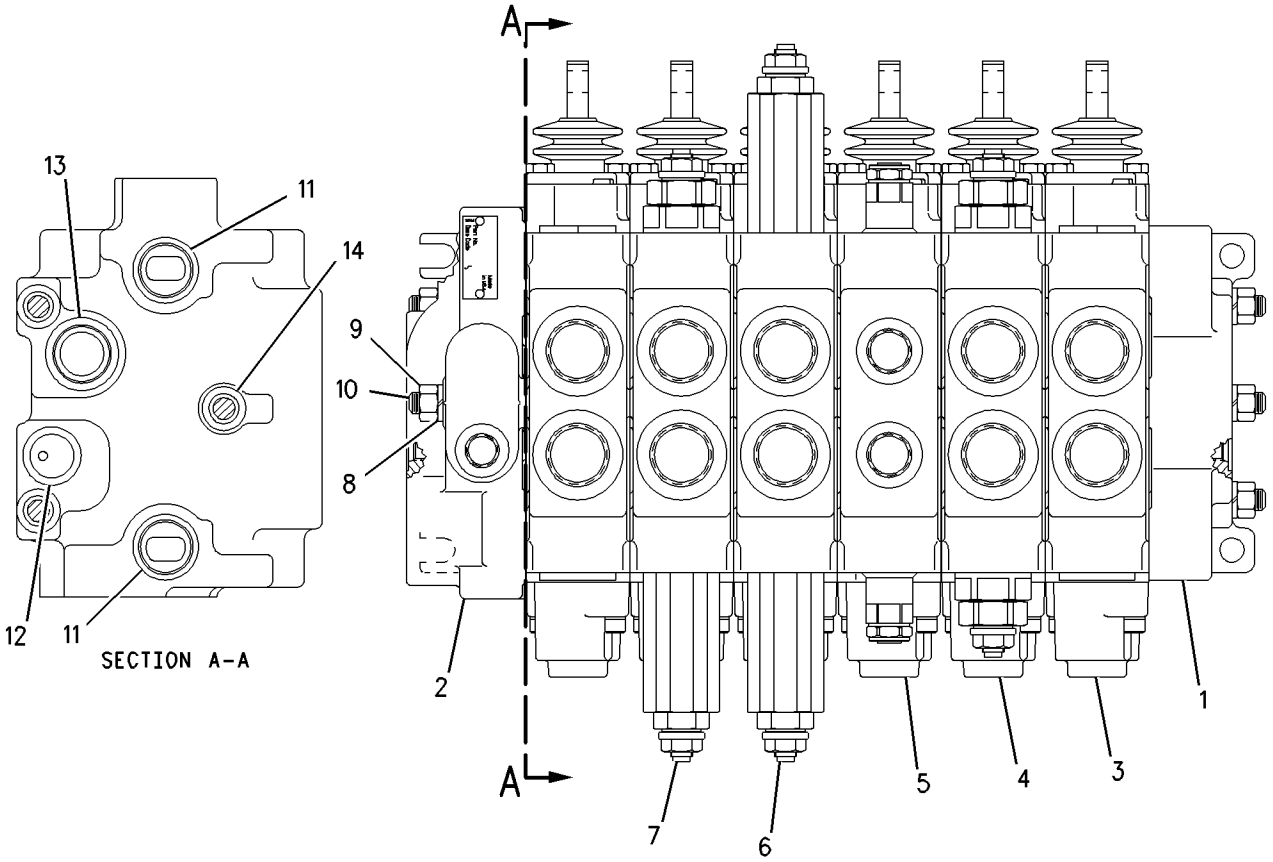


GRAPHIC #1 **<END>** g00754182

# HYDRAULIC SYSTEM

## 203-5488 VALVE GP-BANK 6—BACKHOE

**S/N: BXC1-UP; DSX1-UP**
**PART OF 240-3186 VALVE AR-BANK 6**
**AN ATTACHMENT**

**SMCS-5051** **i02003600**

| NOTE | REF NO | GRAPHIC REF | PART NUMBER | QTY | PART NAME 1 2 3 4 5 6 (PRODUCT LEVEL) | SEE PAGE |
|---|---|---|---|---|---|---|
| Y | 1 | 1 | **202-2236** | 1 | COVER & VALVE GP-BANK | 371 |
| | 2 | 1 | **193-9189** | 1 | COVER AS | |
| | | 1 | **5B-9318** | 1 | BALL | |
| | | 1 | **197-2969** | 1 | SEAT AS | |
| Y | 3 | 1 | **190-3450** | 1 | VALVE GP-CONTROL (AUXILIARY) | 565 |
| Y | 4 | 1 | **204-0532** | 1 | VALVE GP-CONTROL (BOOM) | 575 |
| Y | 5 | 1 | **166-7950** | 1 | VALVE GP-CONTROL (SWING) | 563 |
| Y | 6 | 1 | **193-3124** | 1 | VALVE GP-CONTROL (BUCKET) | 573 |
| Y | 7 | 1 | **204-0533** | 1 | VALVE GP-CONTROL (STICK) | 577 |
| Y | 8 | 1 | **190-3450** | 1 | VALVE GP-CONTROL (EXTENDABLE STICK) | 565 |
| | 9 | 1 | **5M-2894** | 3 | WASHER-HARD (10.2X18.5X2.5MM THK) | |
| | 10 | 1 | **9S-8752** | 3 | NUT-FULL (3/8-16 THD) | |
| | 11 | 1 | **9T-0637** | 3 | STUD | |
| | 12 | 1 | **4D-9986** | 14 | SEAL-O-RING | |
| | 13 | 1 | **4J-5140** | 7 | SEAL-O-RING | |
| | 14 | 1 | **4J-5267** | 7 | SEAL-O-RING | |
| B | 15 | 1 | **4T-2723** | 21 | SHIM (0.076MM THK) | |

B-USE AS REQUIRED
Y-SEPARATE ILLUSTRATION

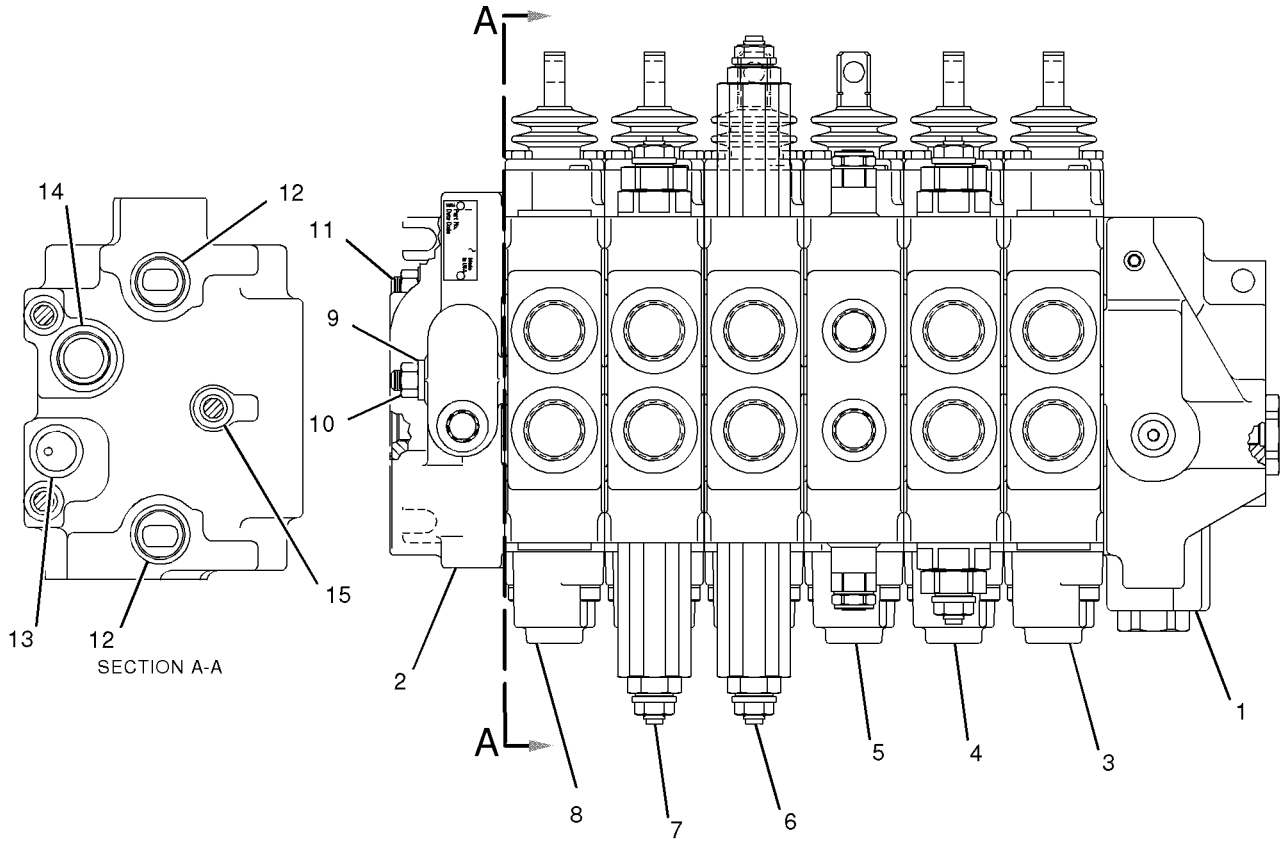


GRAPHIC #1 **<END>** g01037039

# *178-7481* VALVE GP-CHECK–BACK PRESSURE

**S/N: BXC1-UP; DSX1-UP**
**PRE-INSTALLED O-RINGS**
**PART OF 199-9617 LINES GP-BACKHOE AUXILIARY**
**AN ATTACHMENT**

**SMCS-5067** **i01490055**

| NOTE | REF NO | GRAPHIC REF | PART NUMBER | QTY | PART NAME 1 2 3 4 5 6 (PRODUCT LEVEL) | SEE PAGE |
|---|---|---|---|---|---|---|
| | 1 | 1 | **5K-9090** | 2 | SEAL-O-RING | |
| | 2 | 1 | **7M-8485** | 1 | SEAL-O-RING | |

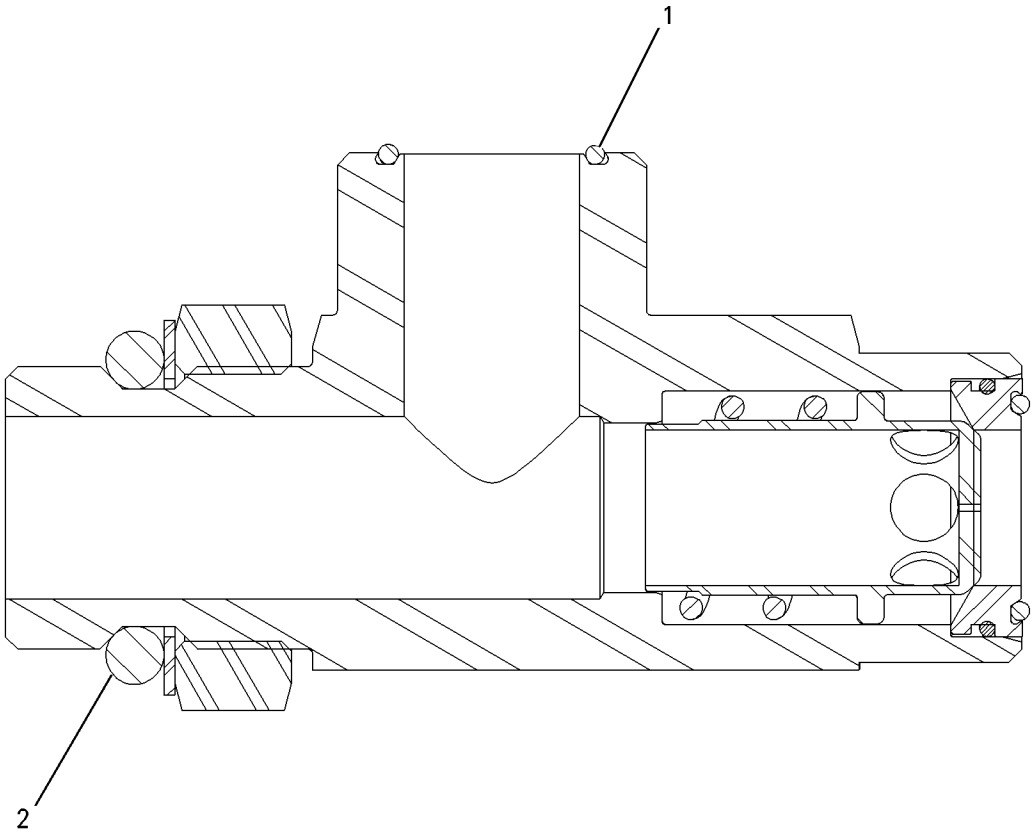


GRAPHIC #1 **<END>** g00774246

# HYDRAULIC SYSTEM

## *124-8818* VALVE GP-CONTROL—AUXILIARY

**S/N: BXC1-UP; DSX1-UP**
**PART OF 185-5912 VALVE GP-BANK 3**
**AN ATTACHMENT**

**SMCS-5051** **i01528677**

| NOTE | REF NO | GRAPHIC REF | PART NUMBER | QTY | PART NAME 1 2 3 4 5 6 (PRODUCT LEVEL) | SEE PAGE |
|---|---|---|---|---|---|---|
| | 1 | 1 | **4T-4524** | 1 | GUARD-DUST | |
| | 2 | 1 | **031-0214** | 2 | BOLT-LOCKING (1/4-20X0.5 IN) | |
| | 3 | 1 | **9T-0704** | 1 | VALVE GP-RELIEF | |
| | 3A | 1 | **4K-1388** | 1 | SEAL-O-RING | |
| | 3B | 1 | **6E-0358** | 1 | RING-BACKUP | |
| | 3C | 1 | **5K-9090** | 1 | SEAL-O-RING | |
| | 4 | 1 | **4T-4516** | 1 | SPRING | |
| | 5 | 1 | **031-5085** | 1 | BOLT-LOCKING (1/4-20X1.00 IN) | |
| | 6 | 1 | **167-6768** | 1 | HOUSING | |
| | 7 | 1 | **4T-4521** | 2 | RETAINER | |
| | 8 | 1 | **4T-4533** | 1 | SPACER | |
| | 9 | 1 | **195-2139** | 2 | SEAL-O-RING | |
| | 10 | 1 | **6E-4317** | 1 | SPRING | |
| | 11 | 1 | **2M-9780** | 1 | SEAL-O-RING | |
| | 12 | 1 | **9S-8006** | 1 | PLUG | |
| | 13 | 1 | **4T-4520** | 1 | FILTER | |
| | 14 | 1 | **4T-4528** | 1 | RETAINER | |
| | 15 | 1 | **126-5476** | 1 | SEAT AS-SHUTTLE | |
| | 15A | 1 | **4T-7807** | 1 | RING-BACKUP | |
| | 15B | 1 | **7J-0204** | 1 | SEAL-O-RING | |
| | 15C | 1 | **8T-2360** | 1 | SEAL-O-RING | |
| | 16 | 1 | **5B-9318** | 1 | BALL | |
| | 17 | 1 | **155-9836** | 1 | HOUSING AS | |
| | 17A | 1 | **1P-7363** | 1 | SEAL-O-RING | |
| | 17B | 1 | **3J-7354** | 1 | SEAL-O-RING | |
| | 17C | 1 | **8T-2361** | 1 | SEAL-O-RING | |
| | 17D | 1 | **126-5984** | 1 | RING-BACKUP | |
| | 17E | 1 | **126-5985** | 1 | RING-BACKUP | |
| | 18 | 1 | **8H-0707** | 2 | BOLT (1/4-20X1 IN) | |

*124-8818* **VALVE GP-CONTROL** *(contd.)* **i01528677**

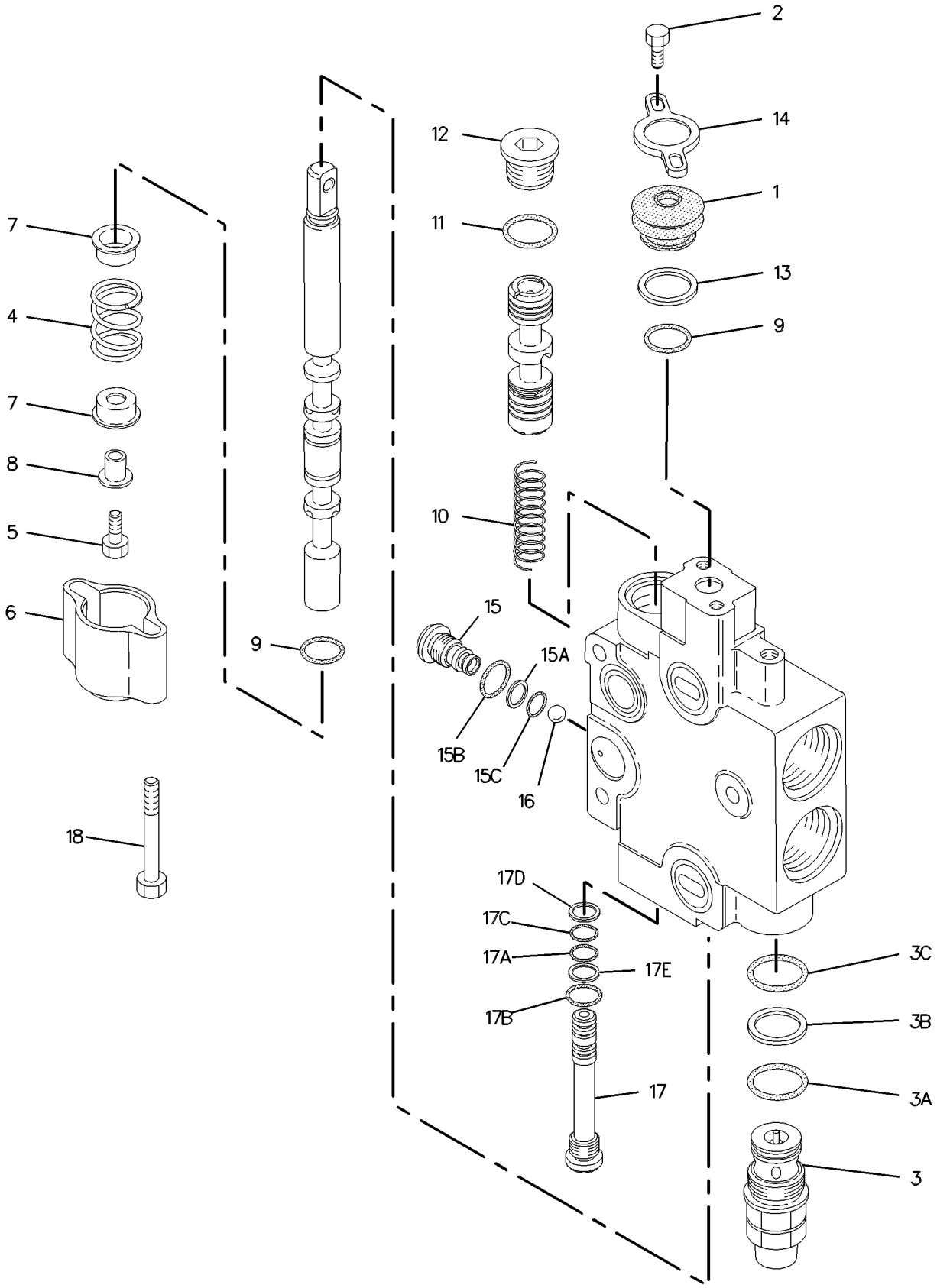


GRAPHIC #1 **<END>** g00538490

# HYDRAULIC SYSTEM

## 130-6520 VALVE GP-CONTROL—LIFT

**S/N: BXC1-UP; DSX1-UP**

**PART OF 185-5911, 185-5913 VALVE GP-BANK 2, 185-5912, 185-5914 VALVE GP-BANK 3**

**AN ATTACHMENT**

**SMCS-5051** **i01672788**

| NOTE | REF NO | GRAPHIC REF | PART NUMBER | QTY | PART NAME 1 2 3 4 5 6 (PRODUCT LEVEL) | SEE PAGE |
|---|---|---|---|---|---|---|
| | 1 | 1 | **4T-4524** | 1 | GUARD-DUST | |
| | 2 | 1 | **031-0214** | 2 | BOLT-LOCKING (1/4-20X0.5 IN) | |
| | 3 | 1 | **4T-4531** | 1 | PLUG | |
| | 4 | 1 | **4T-4513** | 1 | SPRING | |
| | 5 | 1 | **100-3567** | 1 | HOUSING-DETENT | |
| | 6 | 1 | **100-3566** | 1 | PISTON-DETENT | |
| | 7 | 1 | **4B-9782** | 1 | BALL | |
| | 8 | 1 | **4T-4532** | 1 | HOUSING | |
| | 9 | 1 | **144-4277** | 1 | SHAFT AS-DETENT | |
| | 10 | 1 | **8S-4710** | 2 | BOLT (1/4-20X4 IN) | |
| | 11 | 1 | **5P-0537** | 2 | WASHER-HARD (7.2X14.5X2MM THK) | |
| | 12 | 1 | **100-3564** | 1 | SPRING | |
| | 13 | 1 | **4T-4521** | 2 | RETAINER | |
| | 14 | 1 | **100-3563** | 1 | SPACER-DETENT | |
| | 15 | 1 | **8F-0212** | 1 | SEAL-O-RING | |
| | 16 | 1 | **6E-4317** | 1 | SPRING | |
| | 17 | 1 | **2M-9780** | 1 | SEAL-O-RING | |
| | 18 | 1 | **9S-8006** | 1 | PLUG | |
| | 19 | 1 | **4T-4520** | 1 | FILTER | |
| | 20 | 1 | **4T-4528** | 1 | RETAINER | |
| | 21 | 1 | **126-5476** | 1 | SEAT AS-SHUTTLE | |
| | 21A | 1 | **4T-7807** | 1 | RING-BACKUP | |
| | 21B | 1 | **7J-0204** | 1 | SEAL-O-RING | |
| | 21C | 1 | **8T-2360** | 1 | SEAL-O-RING | |
| | 22 | 1 | **5B-9318** | 7 | BALL | |
| | 23 | 1 | **155-9836** | 1 | VALVE GP-RELIEF | |
| | 23A | 1 | **1P-7363** | 1 | SEAL-O-RING | |
| | 23B | 1 | **3J-7354** | 1 | SEAL-O-RING | |
| | 23C | 1 | **8T-2361** | 1 | SEAL-O-RING | |
| | 23D | 1 | **126-5984** | 1 | RING-BACKUP | |
| | 23E | 1 | **126-5985** | 1 | RING-BACKUP | |
| | 24 | 1 | **4K-1388** | 1 | SEAL-O-RING | |
| | 25 | 1 | **6E-0358** | 1 | RING-BACKUP | |
| | 26 | 1 | **5K-9090** | 1 | SEAL-O-RING | |
| | 27 | 1 | **128-2776** | 1 | GASKET | |
| | 28 | 1 | **195-2139** | 1 | SEAL-O-RING | |

## 130-6520 VALVE GP-CONTROL *(contd. )* i01672788

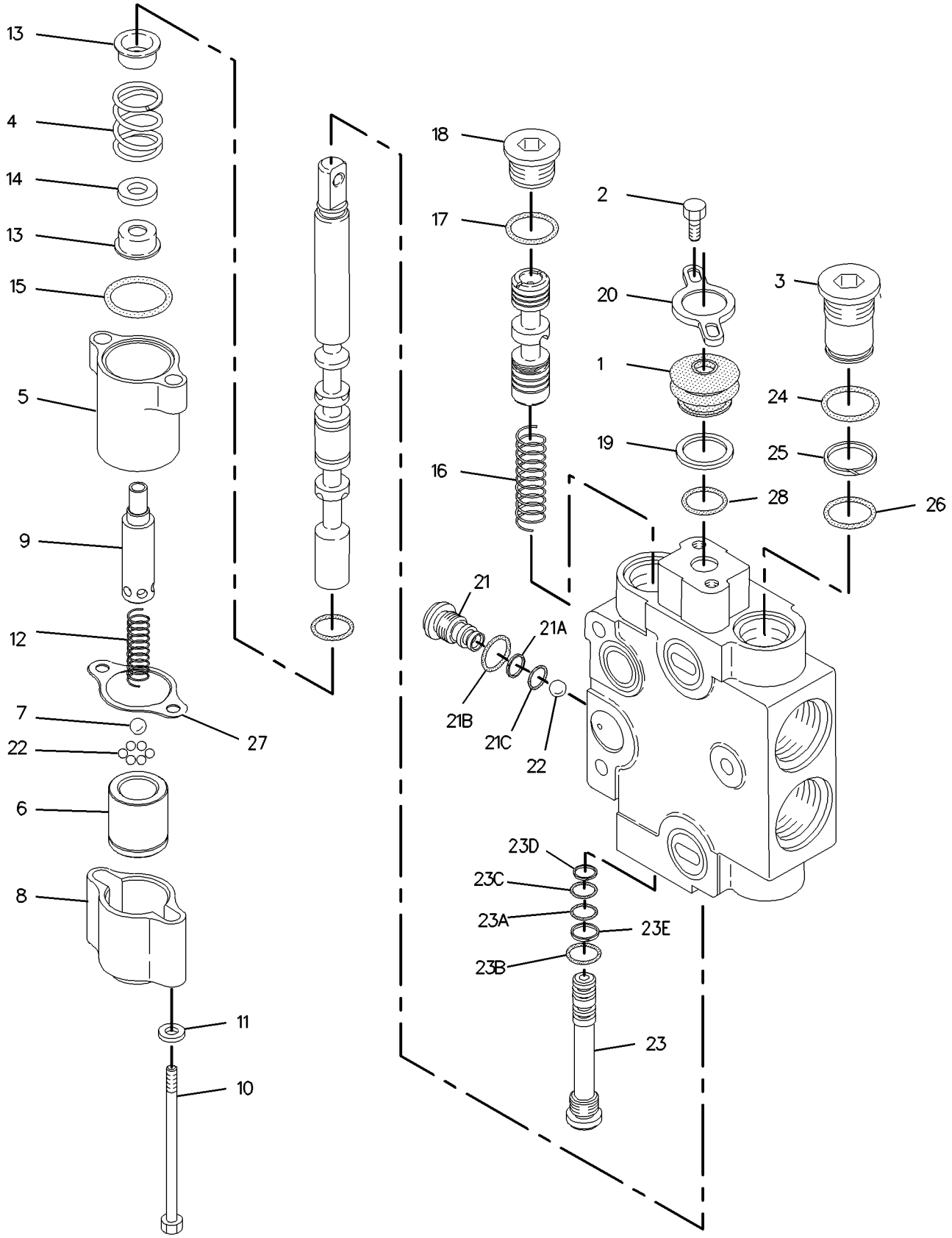


GRAPHIC #1 **<END>** g00864249

# HYDRAULIC SYSTEM

## 166-7950 VALVE GP-CONTROL–SWING

**S/N: BXC1-UP; DSX1-UP**

**PART OF 185-5908, 203-5486 VALVE GP-BANK 4, 185-5909, 203-5487 VALVE GP-BANK 5, 185-5910, 203-5488 VALVE GP-BANK 6**

**AN ATTACHMENT**

**SMCS-5051** **i01601679**

| NOTE | REF NO | GRAPHIC REF | PART NUMBER | QTY | PART NAME 1 2 3 4 5 6 (PRODUCT LEVEL) | SEE PAGE |
|---|---|---|---|---|---|---|
| | 1 | 1 | **4T-4524** | 1 | GUARD-DUST | |
| | 2 | 1 | **031-0214** | 2 | BOLT-LOCKING (1/4-20X0.5 IN) | |
| | 3 | 1 | **137-9466** | 2 | VALVE GP-RELIEF | |
| | | 1 | **147-1659** | 1 | KIT-SEAL | |
| | 4 | 1 | **195-2406** | 1 | SPRING | |
| | 5 | 1 | **0S-1614** | 1 | BOLT (1/4-20X0.5 IN) | |
| | 6 | 1 | **167-6768** | 1 | HOUSING | |
| | 7 | 1 | **4T-4521** | 2 | RETAINER | |
| | 8 | 1 | **9X-2027** | 1 | WASHER (11X18X2MM THK) | |
| | 9 | 1 | **195-2139** | 2 | SEAL-O-RING | |
| | 10 | 1 | **6E-4317** | 1 | SPRING | |
| | 11 | 1 | **126-5796** | 1 | HOUSING GP | |
| | | 1 | **1P-7363** | 1 | SEAL-O-RING | |
| | | 1 | **3J-7354** | 1 | SEAL-O-RING | |
| | | 1 | **8T-2361** | 1 | SEAL-O-RING | |
| | | 1 | **126-5984** | 1 | RING-BACKUP | |
| | | 1 | **126-5985** | 1 | RING-BACKUP | |
| | 12 | 1 | **2M-9780** | 1 | SEAL-O-RING | |
| | 13 | 1 | **9S-8006** | 1 | PLUG | |
| | 14 | 1 | **4T-4520** | 1 | FILTER | |
| | 15 | 1 | **4T-4528** | 1 | RETAINER | |
| | 16 | 1 | **126-5476** | 1 | SEAT AS-SHUTTLE | |
| | | 1 | **4T-7807** | 1 | RING-BACKUP | |
| | | 1 | **7J-0204** | 1 | SEAL-O-RING | |
| | | 1 | **8T-2360** | 1 | SEAL-O-RING | |
| | 17 | 1 | **5B-9318** | 1 | BALL | |
| | 18 | 1 | **8H-0707** | 2 | BOLT (1/4-20X1 IN) | |
| | 19 | 1 | **5P-0537** | 1 | WASHER-HARD (7.2X14.5X2MM THK) | |

## 166-7950 VALVE GP-CONTROL *(contd.)* i01601679

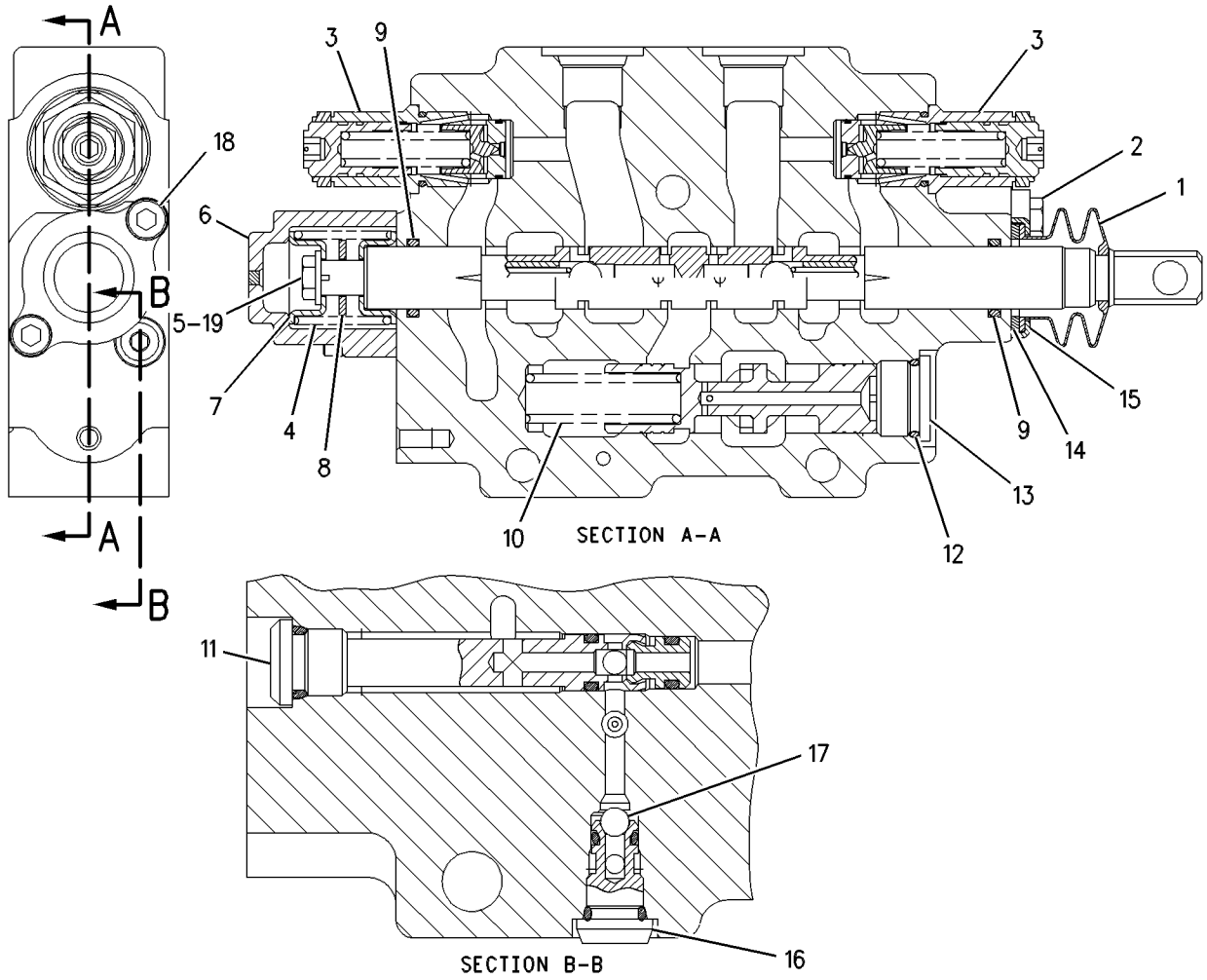


GRAPHIC #1 **<END>** g00535913

# HYDRAULIC SYSTEM

## 190-3450 VALVE GP-CONTROL—EXTENDABLE STICK;AUXILIARY

**S/N: BXC1-UP; DSX1-UP**

**PART OF 204-9195, 204-9196, 204-9197, 204-9198, 204-9199, 204-9200 VALVE GP-AUXILIARY, 185-5909, 203-5487 VALVE GP-BANK 5, 185-5910, 203-5488 VALVE GP-BANK 6**

**AN ATTACHMENT**

**SMCS-5051** **i01668269**

| NOTE | REF NO | GRAPHIC REF | PART NUMBER | QTY | PART NAME 1 2 3 4 5 6 (PRODUCT LEVEL) | SEE PAGE |
|---|---|---|---|---|---|---|
| | 1 | 1 | **195-2139** | 2 | SEAL-O-RING | |
| | 2 | 1 | **9S-8009** | 1 | PLUG | |
| | 3 | 1 | **197-2709** | 1 | SPRING | |
| | 4 | 1 | **155-9836** | 1 | VALVE GP-RELIEF | |
| | 4A | 1 | **1P-7363** | 1 | SEAL-O-RING | |
| | 4B | 1 | **3J-7354** | 1 | SEAL-O-RING | |
| | 4C | 1 | **8T-2361** | 1 | SEAL-O-RING | |
| | 4D | 1 | **126-5984** | 1 | RING-BACKUP | |
| | 4E | 1 | **126-5985** | 1 | RING-BACKUP | |
| | 5 | 1 | **5B-9318** | 1 | BALL | |
| | 6 | 1 | **126-5476** | 1 | SEAT AS-SHUTTLE | |
| | 6A | 1 | **4T-7807** | 1 | RING-BACKUP | |
| | 6B | 1 | **7J-0204** | 1 | SEAL-O-RING | |
| | 6C | 1 | **8T-2360** | 1 | SEAL-O-RING | |
| | 7 | 1 | **4T-4516** | 1 | SPRING | |
| | 8 | 1 | **8H-0707** | 2 | BOLT (1/4-20X1 IN) | |
| | 9 | 1 | **4T-4533** | 1 | SPACER (7.1X10.2X17.3MM DIA) | |
| | 10 | 1 | **167-6768** | 1 | HOUSING | |
| | 11 | 1 | **031-5085** | 1 | BOLT-LOCKING (1/4-20X1.00 IN) | |
| | 12 | 1 | **4T-4521** | 2 | RETAINER | |
| | 13 | 1 | **6E-0131** | 2 | WASHER | |
| | 14 | 1 | **4T-4531** | 2 | PLUG | |
| | 15 | 1 | **031-0214** | 2 | BOLT-LOCKING (1/4-20X0.5 IN) | |
| | 16 | 1 | **4T-4524** | 1 | GUARD-DUST | |
| | 17 | 1 | **4T-4528** | 1 | RETAINER | |
| | 18 | 1 | **4T-4520** | 1 | FILTER | |
| | 19 | 1 | **2M-9780** | 1 | SEAL-O-RING | |
| | 20 | 1 | **4K-1388** | 2 | SEAL-O-RING | |
| | 21 | 1 | **5K-9090** | 2 | SEAL-O-RING | |
| | 22 | 1 | **6E-0358** | 2 | RING-BACKUP | |

## 190-3450 VALVE GP-CONTROL *(contd. )* i01668269

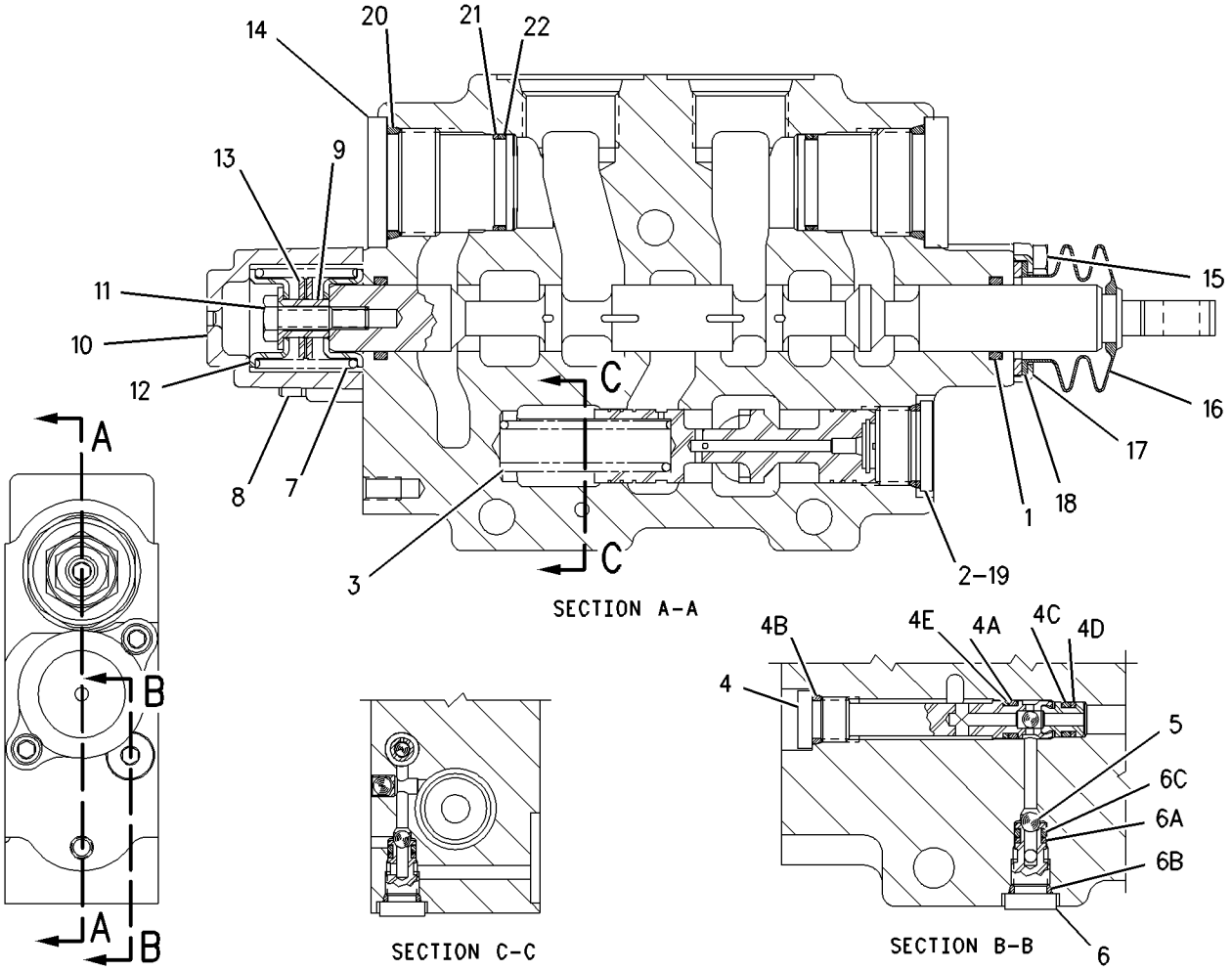


GRAPHIC #1 **<END>** g00861676

# HYDRAULIC SYSTEM

## 191-4012 VALVE GP-CONTROL–TILT

**S/N: BXC1-UP; DSX1-UP**

**PART OF 185-5911 VALVE GP-BANK 2, 185-5912 VALVE GP-BANK 3**

**AN ATTACHMENT**

**SMCS-5051** **i01668186**

| NOTE | REF NO | GRAPHIC REF | PART NUMBER | QTY | PART NAME 1 2 3 4 5 6 (PRODUCT LEVEL) | SEE PAGE |
|---|---|---|---|---|---|---|
| | 1 | 1 | **195-2139** | 2 | SEAL-O-RING | |
| | 2 | 1 | **9S-8009** | 1 | PLUG | |
| | 3 | 1 | **6E-4317** | 1 | SPRING | |
| | 4 | 1 | **155-9836** | 1 | VALVE GP-RELIEF | |
| | | 1 | **1P-7363** | 1 | SEAL-O-RING | |
| | | 1 | **3J-7354** | 1 | SEAL-O-RING | |
| | | 1 | **8T-2361** | 1 | SEAL-O-RING | |
| | | 1 | **126-5984** | 1 | RING-BACKUP | |
| | | 1 | **126-5985** | 1 | RING-BACKUP | |
| | 5 | 1 | **5B-9318** | 1 | BALL | |
| | 6 | 1 | **126-5476** | 1 | SEAT AS-SHUTTLE | |
| | | 1 | **4T-7807** | 1 | RING-BACKUP | |
| | | 1 | **7J-0204** | 1 | SEAL-O-RING | |
| | | 1 | **8T-2360** | 1 | SEAL-O-RING | |
| | 7 | 1 | **197-3698** | 1 | SEAL-O-RING | |
| | 8 | 1 | **8F-0212** | 1 | SEAL-O-RING | |
| | 9 | 1 | **4T-4516** | 1 | SPRING | |
| | 10 | 1 | **3E-8620** | 1 | COIL AS-SOLENOID | |
| | | 1 | **1S-9593** | 2 | STRAP-CABLE | |
| | | 1 | **102-8802** | 1 | KIT-RECEPTACLE (2 PIN) | |
| | | | | | (KIT SERVICES RECEPTACLE AS. AND WEDGE) | |
| | | 1 | **3E-3365** | 1 | WEDGE-RECEPTACLE LOCK (2 PIN) | |
| | | 1 | **8T-8729** | 2 | PIN-CONNECTOR | |
| | 11 | 1 | **9T-7309** | 1 | PLATE | |
| | 12 | 1 | **5P-0537** | 2 | WASHER-HARD (7.2X14.5X2MM THK) | |
| | 13 | 1 | **8F-6302** | 2 | BOLT (1/4-20X3.75IN) | |
| | 14 | 1 | **9T-0642** | 1 | COUPLING | |
| | 15 | 1 | **5L-9023** | 1 | RING-RETAINING | |
| | 16 | 1 | **4T-4532** | 1 | HOUSING | |
| | 17 | 1 | **9T-0644** | 1 | SPRING | |
| | 18 | 1 | **128-2776** | 1 | GASKET | |
| | 19 | 1 | **4T-4521** | 2 | RETAINER | |
| | 20 | 1 | **187-0530** | 2 | VALVE GP-RELIEF | |
| | 21 | 1 | **031-0214** | 2 | BOLT-LOCKING (1/4-20X0.5 IN) | |
| | 22 | 1 | **4T-4524** | 1 | GUARD-DUST | |
| | 23 | 1 | **4T-4528** | 1 | RETAINER | |
| | 24 | 1 | **4T-4520** | 1 | FILTER | |
| | 25 | 1 | **197-3121** | 1 | RING-GUIDE | |
| | 26 | 1 | **2M-9780** | 1 | SEAL-O-RING | |

**191-4012 VALVE GP-CONTROL** *(contd.)* **i01668186**

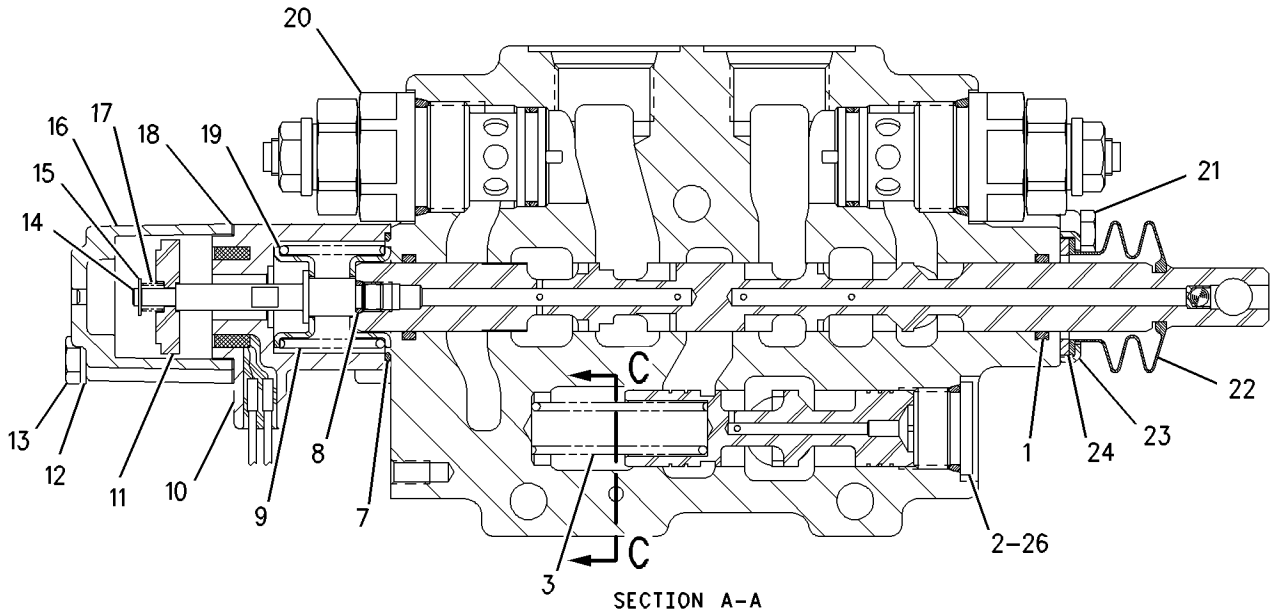


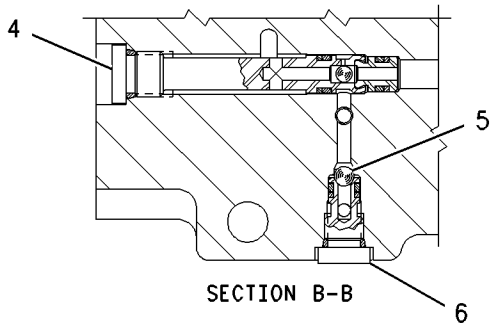


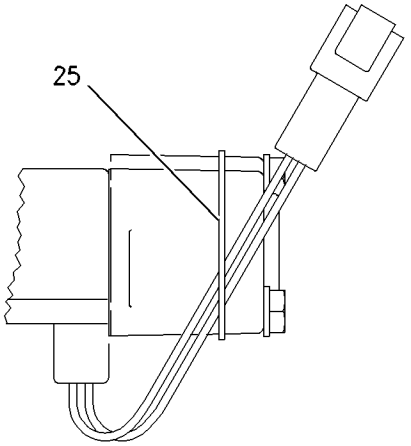


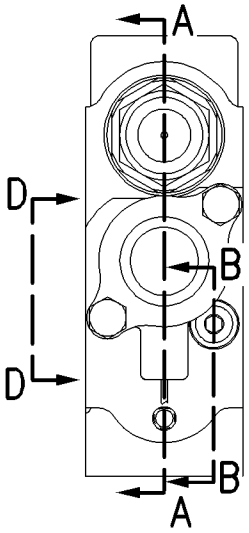


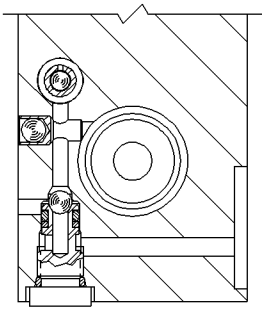


GRAPHIC #1 **<END>** g00861612

# HYDRAULIC SYSTEM

## 191-4032 VALVE GP-CONTROL–TILT

**S/N: BXC1-UP; DSX1-UP**
**PART OF 185-5913 VALVE GP-BANK 2, 185-5914 VALVE GP-BANK 3**
**AN ATTACHMENT**

**SMCS-5051** **i01743438**

| NOTE | REF NO | GRAPHIC REF | PART NUMBER | QTY | PART NAME 1 2 3 4 5 6 (PRODUCT LEVEL) | SEE PAGE |
|---|---|---|---|---|---|---|
| | 1 | 1 | **195-2139** | 2 | SEAL-O-RING | |
| | 2 | 1 | **9S-8009** | 1 | PLUG | |
| | 3 | 1 | **6E-4317** | 1 | SPRING | |
| | 4 | 1 | **155-9836** | 1 | VALVE GP-RELIEF | |
| | | 1 | **1P-7363** | 1 | SEAL-O-RING | |
| | | 1 | **3J-7354** | 1 | SEAL-O-RING | |
| | | 1 | **8T-2361** | 1 | SEAL-O-RING | |
| | | 1 | **126-5984** | 1 | RING-BACKUP | |
| | | 1 | **126-5985** | 1 | RING-BACKUP | |
| | 5 | 1 | **5B-9318** | 1 | BALL | |
| | 6 | 1 | **126-5476** | 1 | SEAT AS-SHUTTLE | |
| | | 1 | **4T-7807** | 1 | RING-BACKUP | |
| | | 1 | **7J-0204** | 1 | SEAL-O-RING | |
| | | 1 | **8T-2360** | 1 | SEAL-O-RING | |
| | 7 | 1 | **2M-9780** | 1 | SEAL-O-RING | |
| | 8 | 1 | **197-3698** | 2 | SEAL-O-RING | |
| | 9 | 1 | **197-3126** | 1 | SPACER | |
| | 10 | 1 | **4T-4521** | 3 | RETAINER | |
| | 11 | 1 | **133-8690** | 1 | COUPLING AS | |
| | 12 | 1 | **3E-8620** | 1 | COIL AS-SOLENOID | |
| | | 1 | **1S-9593** | 2 | STRAP-CABLE | |
| | | 1 | **102-8802** | 1 | KIT-RECEPTACLE (2 PIN) | |
| | | | | | (KIT SERVICES RECEPTACLE AS AND WEDGE) | |
| | | 1 | **186-3735** | 2 | PIN-CONNECTOR | |
| | 13 | 1 | **9T-7309** | 1 | PLATE | |
| | 14 | 1 | **5P-0537** | 2 | WASHER-HARD (7.2X14.5X2MM THK) | |
| | 15 | 1 | **1B-2718** | 2 | BOLT (1/4-20X6IN) | |
| | 16 | 1 | **5L-9023** | 1 | RING-RETAINING | |
| | 17 | 1 | **133-8689** | 1 | HOUSING | |
| | 18 | 1 | **9T-0644** | 1 | SPRING | |
| | 19 | 1 | **128-2776** | 1 | GASKET | |
| | 20 | 1 | **133-8688** | 1 | SPRING | |
| | 21 | 1 | **100-3567** | 1 | HOUSING-DETENT | |
| | 22 | 1 | **4T-4513** | 1 | SPRING | |
| C | 23 | 1 | **187-0532** | 1 | VALVE GP-RELIEF | |
| | 24 | 1 | **197-3124** | 1 | VALVE GP-RELIEF | |
| | 25 | 1 | **031-0214** | 2 | BOLT-LOCKING (1/4-20X0.5 IN) | |
| | 26 | 1 | **4T-4524** | 1 | GUARD-DUST | |
| | 27 | 1 | **4T-4528** | 1 | RETAINER | |
| | 28 | 1 | **4T-4520** | 1 | FILTER | |
| | 29 | 1 | **197-3121** | 1 | RING-GUIDE | |

C-CHANGE FROM PREVIOUS TYPE

## 191-4032 VALVE GP-CONTROL *(contd.)* i01743438

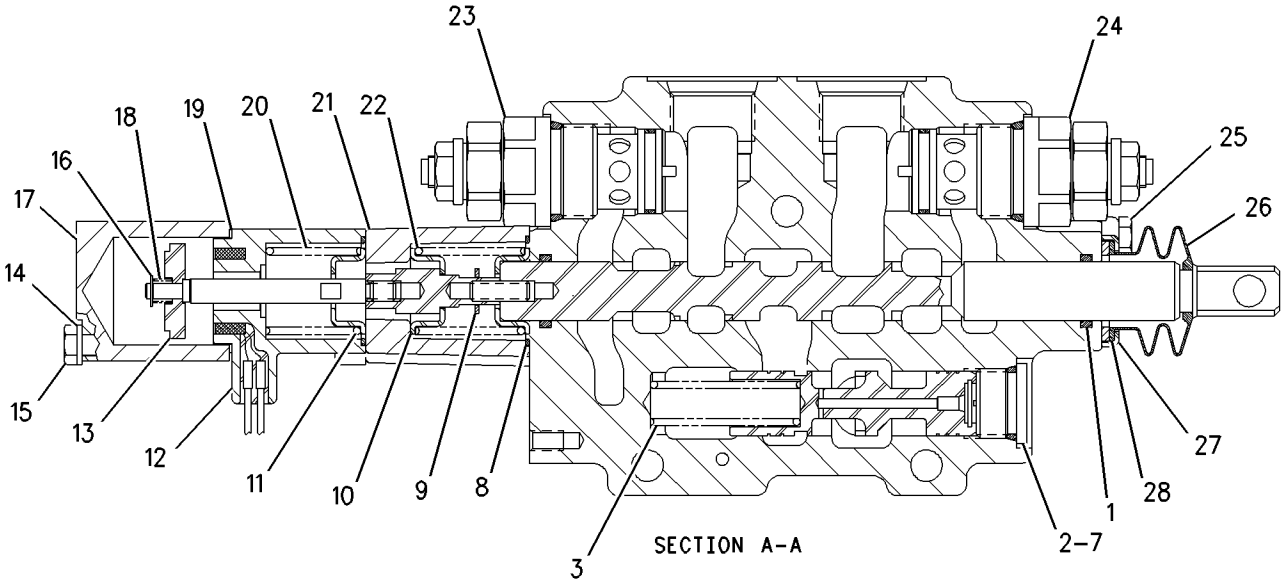


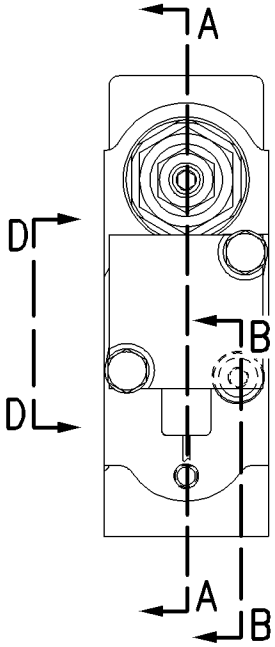


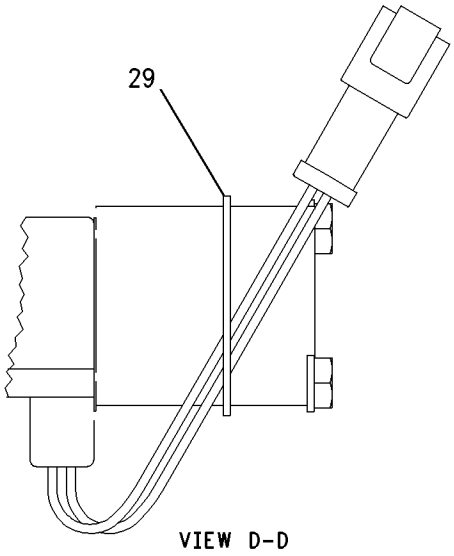


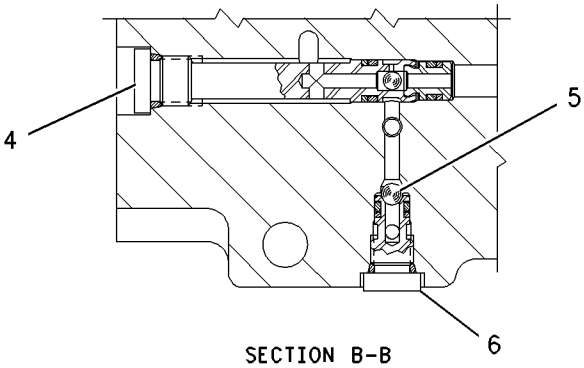


GRAPHIC #1 **<END>** g00826787

# HYDRAULIC SYSTEM

## 191-4035 VALVE GP-CONTROL–CLAM

**S/N: BXC1-UP; DSX1-UP**
**PART OF 185-5914 VALVE GP-BANK 3**
**AN ATTACHMENT**

**SMCS-5051** **i01738074**

| NOTE | REF NO | GRAPHIC REF | PART NUMBER | QTY | PART NAME 1 2 3 4 5 6 (PRODUCT LEVEL) | SEE PAGE |
|---|---|---|---|---|---|---|
| | 1 | 1 | **195-2139** | 2 | SEAL-O-RING | |
| | 2 | 1 | **9S-8009** | 1 | PLUG | |
| | 3 | 1 | **6E-4317** | 1 | SPRING | |
| | 4 | 1 | **155-9836** | 1 | VALVE GP-RELIEF | |
| | | 1 | **1P-7363** | 1 | SEAL-O-RING | |
| | | 1 | **3J-7354** | 1 | SEAL-O-RING | |
| | | 1 | **8T-2361** | 1 | SEAL-O-RING | |
| | | 1 | **126-5984** | 1 | RING-BACKUP | |
| | | 1 | **126-5985** | 1 | RING-BACKUP | |
| | 5 | 1 | **5B-9318** | 1 | BALL | |
| | 6 | 1 | **126-5476** | 1 | SEAT AS-SHUTTLE | |
| | | 1 | **4T-7807** | 1 | RING-BACKUP | |
| | | 1 | **7J-0204** | 1 | SEAL-O-RING | |
| | | 1 | **8T-2360** | 1 | SEAL-O-RING | |
| | 7 | 1 | **197-3698** | 1 | SEAL-O-RING | |
| | 8 | 1 | **4T-4516** | 1 | SPRING | |
| | 9 | 1 | **4T-4521** | 2 | RETAINER | |
| | 10 | 1 | **9T-7309** | 1 | PLATE | |
| | 11 | 1 | **9T-0644** | 1 | SPRING | |
| | 12 | 1 | **5P-0537** | 2 | WASHER-HARD (7.2X14.5X2MM THK) | |
| | 13 | 1 | **8B-2377** | 2 | BOLT (1/4-20X2 IN) | |
| | 14 | 1 | **5L-9023** | 1 | RING-RETAINING | |
| | 15 | 1 | **4T-4532** | 1 | HOUSING | |
| | 16 | 1 | **9T-0642** | 1 | COUPLING | |
| | 17 | 1 | **128-2776** | 1 | GASKET | |
| | 18 | 1 | **3E-8620** | 1 | COIL AS-SOLENOID | |
| | | 1 | **1S-9593** | 2 | STRAP-CABLE | |
| | | 1 | **102-8802** | 1 | KIT-RECEPTACLE (2 PIN) | |
| | | | | | (KIT SERVICES RECEPTACLE AS. AND WEDGE) | |
| | | 1 | **3E-3365** | 1 | WEDGE-RECEPTACLE LOCK (2 PIN) | |
| | | 1 | **186-3735** | 2 | PIN-CONNECTOR | |
| C | 19 | 1 | **9T-0704** | 1 | VALVE GP-RELIEF | |
| | | 1 | **4K-1388** | 1 | SEAL-O-RING | |
| | | 1 | **5K-9090** | 1 | SEAL-O-RING | |
| | | 1 | **6E-0358** | 1 | RING-BACKUP | |
| | 20 | 1 | **031-0214** | 2 | BOLT-LOCKING (1/4-20X0.5 IN) | |
| | 21 | 1 | **4T-4524** | 1 | GUARD-DUST | |
| | 22 | 1 | **4T-4528** | 1 | RETAINER | |
| | 23 | 1 | **4T-4520** | 1 | FILTER | |
| | 24 | 1 | **197-3121** | 1 | RING-GUIDE | |
| | 25 | 1 | **2M-9780** | 1 | SEAL-O-RING (19.18MM ID) | |

C-CHANGE FROM PREVIOUS TYPE

## 191-4035 VALVE GP-CONTROL *(contd.)* i01738074

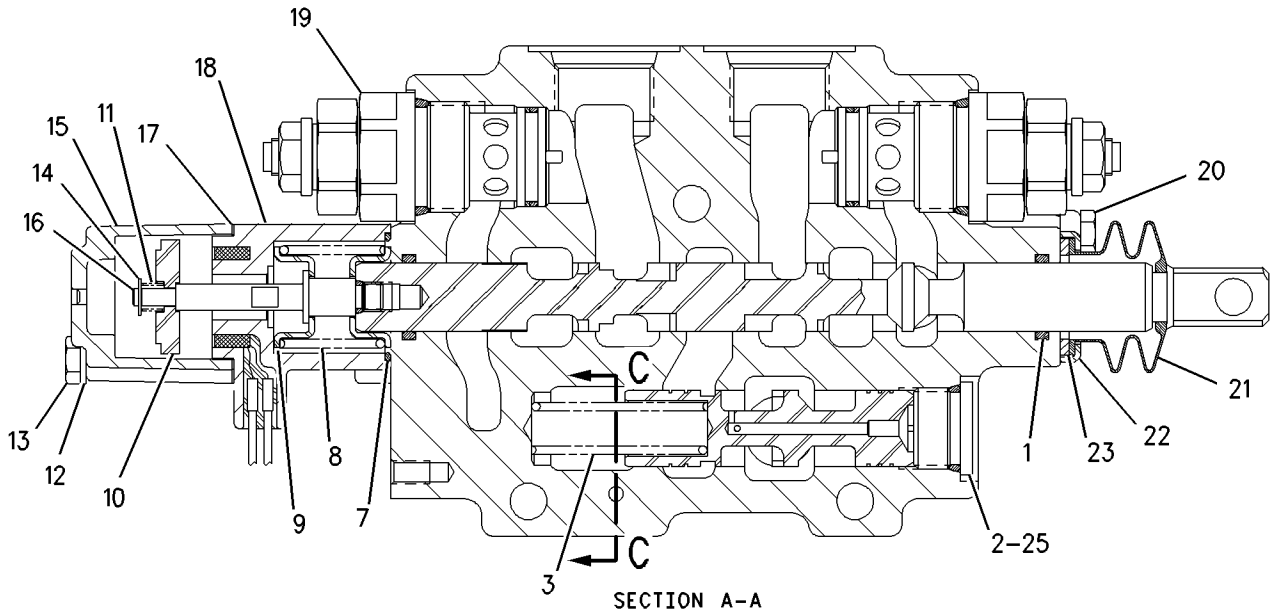


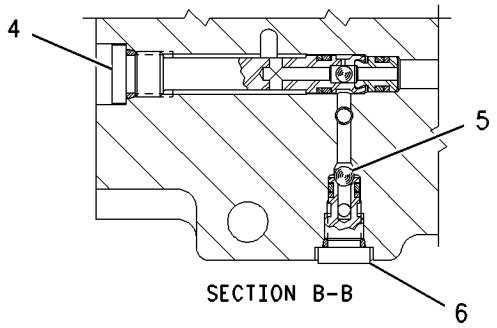


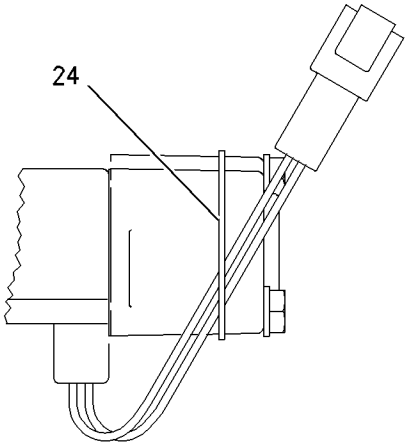


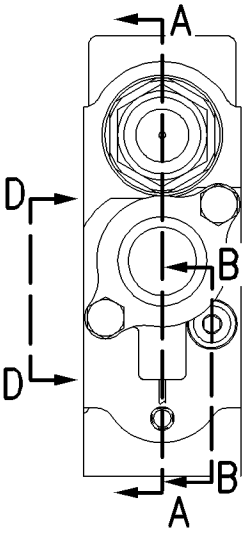


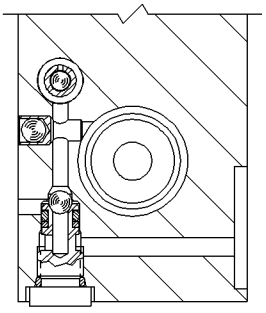


GRAPHIC #1 **<END>** g00826820

# HYDRAULIC SYSTEM

## 193-3124 VALVE GP-CONTROL—BUCKET

**S/N: BXC1-UP; DSX1-UP**

**PART OF 185-5908, 203-5486 VALVE GP-BANK 4, 185-5909, 203-5487 VALVE GP-BANK 5, 185-5910, 203-5488 VALVE GP-BANK 6**

**AN ATTACHMENT**

**SMCS-5051** **i01735786**

| NOTE | REF NO | GRAPHIC REF | PART NUMBER | QTY | PART NAME 1 2 3 4 5 6 (PRODUCT LEVEL) | SEE PAGE |
|---|---|---|---|---|---|---|
| | 1 | 1 | **195-2139** | 2 | SEAL-O-RING | |
| | 2 | 1 | **9S-8009** | 1 | PLUG | |
| | 3 | 1 | **197-2709** | 1 | SPRING | |
| | 4 | 1 | **126-5796** | 1 | HOUSING GP | |
| | | 1 | **1P-7363** | 1 | SEAL-O-RING | |
| | | 1 | **3J-7354** | 1 | SEAL-O-RING | |
| | | 1 | **8T-2361** | 1 | SEAL-O-RING | |
| | | 1 | **126-5984** | 1 | RING-BACKUP | |
| | | 1 | **126-5985** | 1 | RING-BACKUP | |
| | 5 | 1 | **5B-9318** | 1 | BALL | |
| | 6 | 1 | **126-5476** | 1 | SEAT AS-SHUTTLE | |
| | | 1 | **4T-7807** | 1 | RING-BACKUP | |
| | | 1 | **7J-0204** | 1 | SEAL-O-RING | |
| | | 1 | **8T-2360** | 1 | SEAL-O-RING | |
| | 7 | 1 | **195-2406** | 1 | SPRING | |
| | 8 | 1 | **8H-0707** | 2 | BOLT (1/4-20X1 IN) | |
| | 9 | 1 | **4T-4533** | 1 | SPACER | |
| | 10 | 1 | **4T-4521** | 2 | RETAINER | |
| | 11 | 1 | **167-6768** | 1 | HOUSING | |
| | 12 | 1 | **031-5085** | 1 | BOLT-LOCKING (1/4-20X1.00 IN) | |
| | 13 | 1 | **187-0527** | 1 | VALVE GP-RELIEF | |
| | | 1 | **3K-0360** | 1 | SEAL-O-RING | |
| | | 1 | **4K-1388** | 1 | SEAL-O-RING | |
| | | 1 | **5K-9090** | 1 | SEAL-O-RING | |
| | | 1 | **6E-0358** | 1 | RING-BACKUP | |
| | 14 | 1 | **187-0524** | 1 | VALVE GP-RELIEF | |
| | | 1 | **3K-0360** | 1 | SEAL-O-RING | |
| | | 1 | **4K-1388** | 1 | SEAL-O-RING | |
| | | 1 | **5K-9090** | 1 | SEAL-O-RING | |
| | | 1 | **6E-0358** | 1 | RING-BACKUP | |
| | 15 | 1 | **031-0214** | 2 | BOLT-LOCKING (1/4-20X0.5 IN) | |
| | 16 | 1 | **4T-4524** | 1 | GUARD-DUST | |
| | 17 | 1 | **4T-4528** | 1 | RETAINER | |
| | 18 | 1 | **4T-4520** | 1 | FILTER | |
| | 19 | 1 | **2M-9780** | 1 | SEAL-O-RING | |

**193-3124 VALVE GP-CONTROL** *(contd.)* **i01735786**

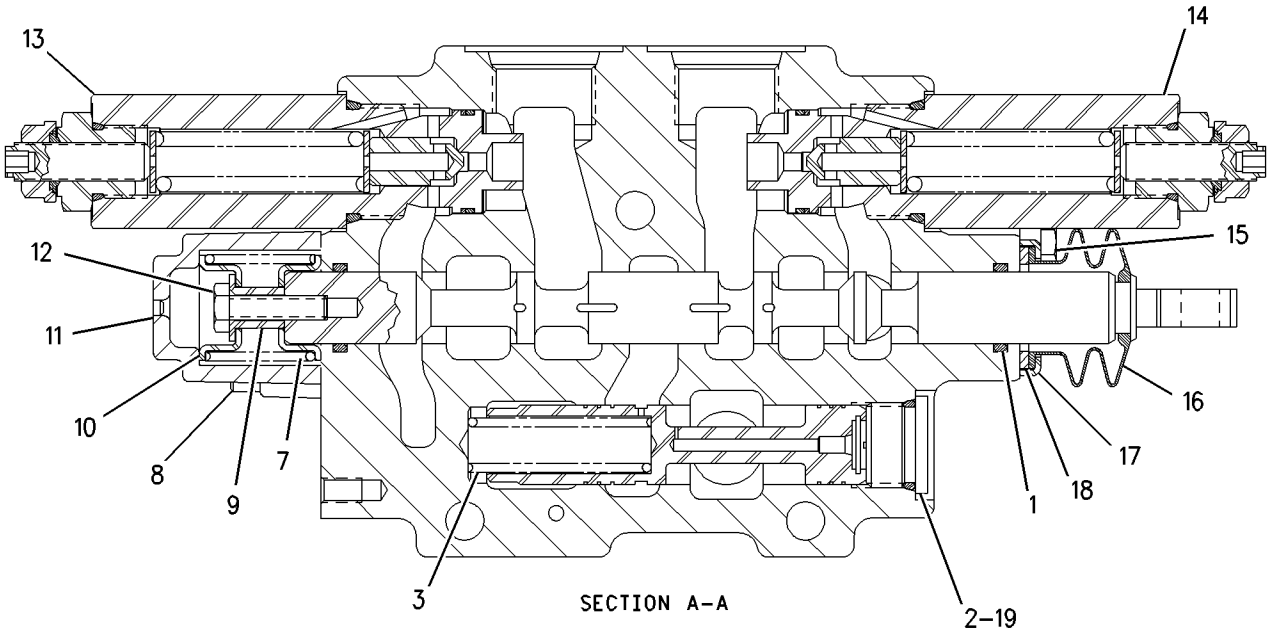


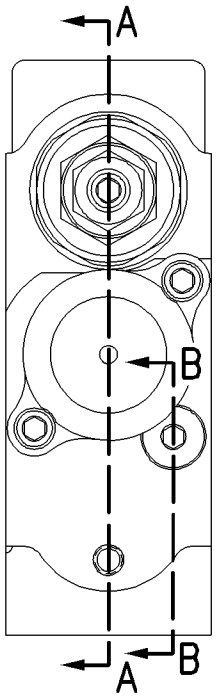


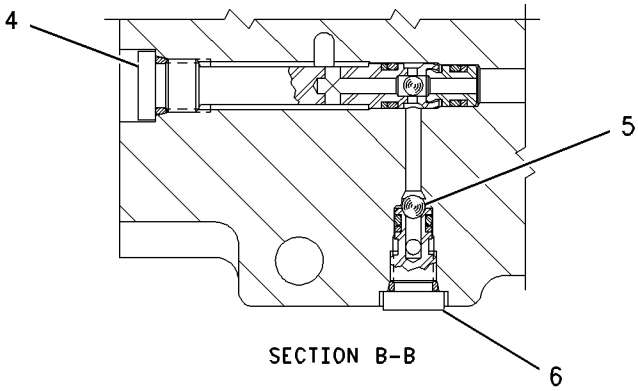


GRAPHIC #1 **<END>** g00748282

# HYDRAULIC SYSTEM

## 204-0532 VALVE GP-CONTROL–BOOM

**S/N: BXC1-UP; DSX1-UP**

**PART OF 185-5908, 203-5486 VALVE GP-BANK 4, 185-5909, 203-5487 VALVE GP-BANK 5, 185-5910, 203-5488 VALVE GP-BANK 6**

**AN ATTACHMENT**

**SMCS-5051** **i01666538**

| NOTE | REF NO | GRAPHIC REF | PART NUMBER | QTY | PART NAME 1 2 3 4 5 6 (PRODUCT LEVEL) | SEE PAGE |
|---|---|---|---|---|---|---|
| | 1 | 1 | **195-2139** | 2 | SEAL-O-RING | |
| | 2 | 1 | **9S-8009** | 1 | PLUG | |
| | 3 | 1 | **197-2709** | 1 | SPRING | |
| | 4 | 1 | **126-5796** | 1 | HOUSING GP | |
| | 4A | 1 | **1P-7363** | 1 | SEAL-O-RING | |
| | 4B | 1 | **3J-7354** | 1 | SEAL-O-RING | |
| | 4C | 1 | **8T-2361** | 1 | SEAL-O-RING | |
| | 4D | 1 | **126-5984** | 1 | RING-BACKUP | |
| | 4E | 1 | **126-5985** | 1 | RING-BACKUP | |
| | 5 | 1 | **5B-9318** | 1 | BALL | |
| | 6 | 1 | **126-5476** | 1 | SEAT AS-SHUTTLE | |
| | 6A | 1 | **4T-7807** | 1 | RING-BACKUP | |
| | 6B | 1 | **7J-0204** | 1 | SEAL-O-RING | |
| | 6C | 1 | **8T-2360** | 1 | SEAL-O-RING | |
| | 7 | 1 | **109-9685** | 1 | SEAL-O-RING | |
| | 8 | 1 | **8H-0707** | 2 | BOLT (1/4-20X1 IN) | |
| | 9 | 1 | **195-2406** | 1 | SPRING | |
| | 10 | 1 | **167-6768** | 1 | HOUSING | |
| | 11 | 1 | **4T-4533** | 1 | SPACER | |
| | 12 | 1 | **4T-4521** | 2 | RETAINER | |
| | 13 | 1 | **187-0523** | 1 | VALVE GP-RELIEF | |
| | | 1 | **4K-1388** | 1 | SEAL-O-RING | |
| | | 1 | **5K-9090** | 1 | SEAL-O-RING | |
| | | 1 | **6E-0358** | 1 | RING-BACKUP | |
| | 14 | 1 | **6E-6285** | 1 | VALVE GP-RELIEF | |
| | | 1 | **4K-1388** | 1 | SEAL-O-RING | |
| | | 1 | **5K-9090** | 1 | SEAL-O-RING | |
| | | 1 | **6E-0358** | 1 | RING-BACKUP | |
| | 15 | 1 | **031-0214** | 2 | BOLT-LOCKING (1/4-20X0.5 IN) | |
| | 16 | 1 | **4T-4524** | 1 | GUARD-DUST | |
| | 17 | 1 | **4T-4528** | 1 | RETAINER | |
| | 18 | 1 | **4T-4520** | 1 | FILTER | |
| | 19 | 1 | **2M-9780** | 1 | SEAL-O-RING | |
| | 20 | 1 | **031-5085** | 1 | BOLT-LOCKING (1/4-20X1.00 IN) | |

**204-0532 VALVE GP-CONTROL** *(contd. )* **i01666538**

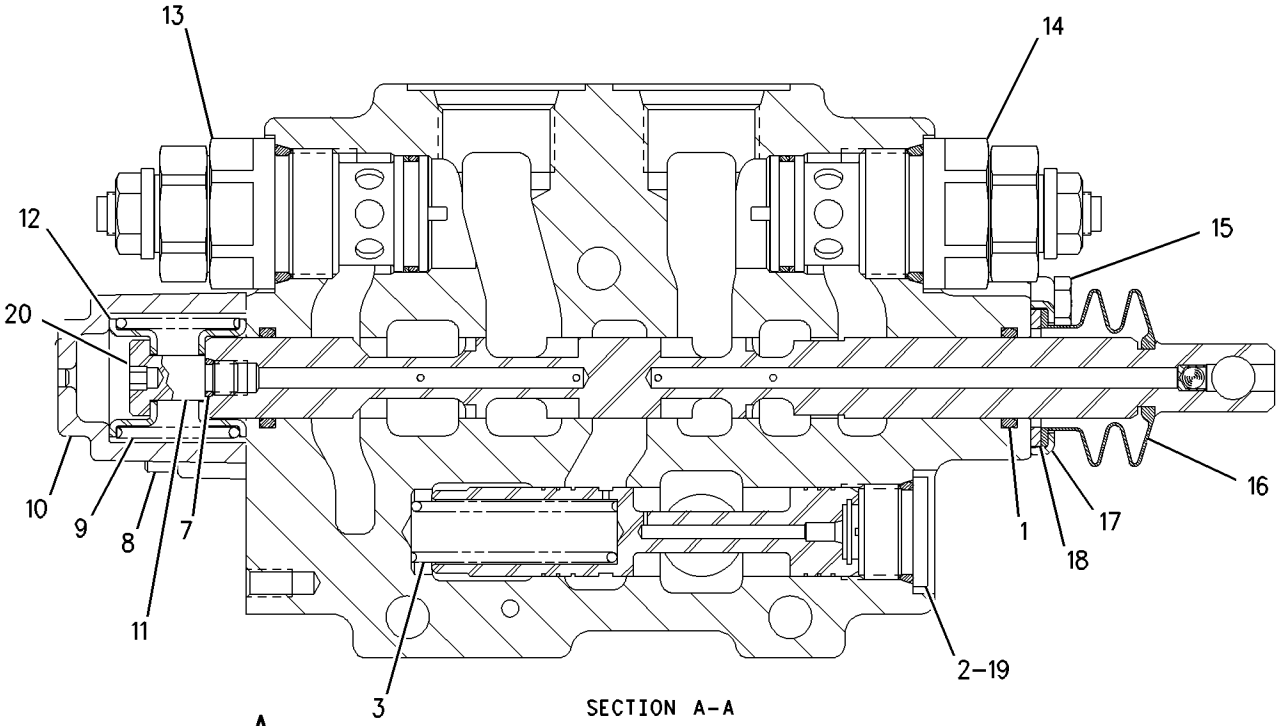


SECTION A-A

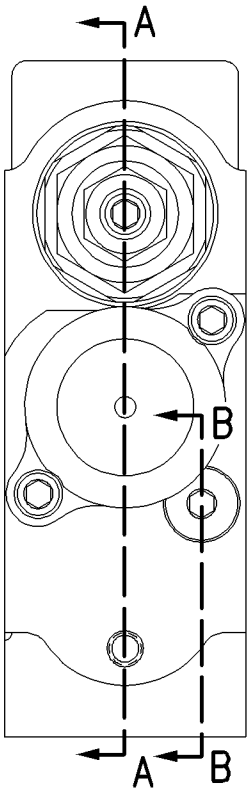


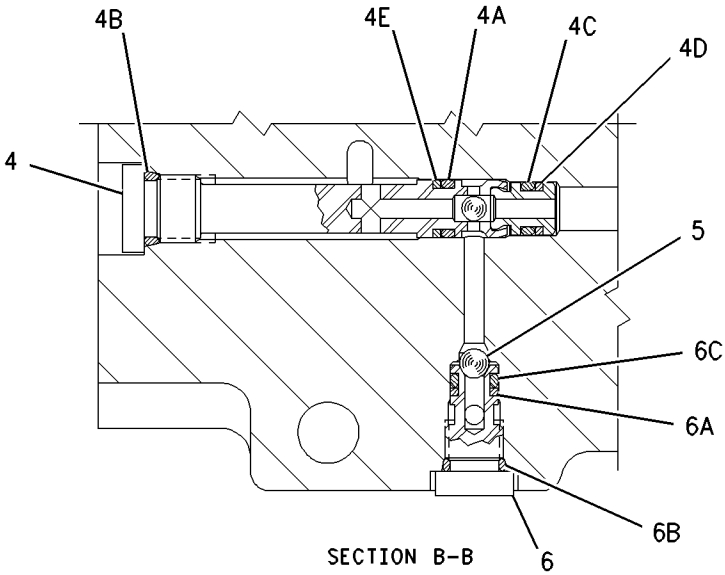


SECTION B-B

GRAPHIC #1 **<END>** g00817378

# HYDRAULIC SYSTEM

## 204-0533 VALVE GP-CONTROL–STICK

**S/N: BXC1-UP; DSX1-UP**

**PART OF 185-5908, 203-5486 VALVE GP-BANK 4, 185-5909, 203-5487 VALVE GP-BANK 5, 185-5910, 203-5488 VALVE GP-BANK 6**

**AN ATTACHMENT**

**SMCS-5051** **i01666553**

| NOTE | REF NO | GRAPHIC REF | PART NUMBER | QTY | PART NAME 1 2 3 4 5 6 (PRODUCT LEVEL) | SEE PAGE |
|---|---|---|---|---|---|---|
| | 1 | 1 | **195-2139** | 2 | SEAL-O-RING | |
| | 2 | 1 | **9S-8009** | 1 | PLUG | |
| | 3 | 1 | **197-2709** | 1 | SPRING | |
| | 4 | 1 | **126-5796** | 1 | HOUSING GP | |
| | 4A | 1 | **1P-7363** | 1 | SEAL-O-RING | |
| | 4B | 1 | **3J-7354** | 1 | SEAL-O-RING | |
| | 4C | 1 | **8T-2361** | 1 | SEAL-O-RING | |
| | 4D | 1 | **126-5984** | 1 | RING-BACKUP | |
| | 4E | 1 | **126-5985** | 1 | RING-BACKUP | |
| | 5 | 1 | **5B-9318** | 1 | BALL | |
| | 6 | 1 | **126-5476** | 1 | SEAT AS-SHUTTLE | |
| | 6A | 1 | **4T-7807** | 1 | RING-BACKUP | |
| | 6B | 1 | **7J-0204** | 1 | SEAL-O-RING | |
| | 6C | 1 | **8T-2360** | 1 | SEAL-O-RING | |
| | 7 | 1 | **109-9685** | 1 | SEAL-O-RING | |
| | 8 | 1 | **8H-0707** | 2 | BOLT (1/4-20X1 IN) | |
| | 9 | 1 | **195-2406** | 1 | SPRING | |
| | 10 | 1 | **4T-4521** | 2 | RETAINER | |
| | 11 | 1 | **167-6768** | 1 | HOUSING | |
| | 12 | 1 | **4T-4533** | 1 | SPACER | |
| | 13 | 1 | **187-0529** | 1 | VALVE GP-RELIEF | |
| | | 1 | **4K-1388** | 1 | SEAL-O-RING | |
| | | 1 | **5K-9090** | 1 | SEAL-O-RING | |
| | | 1 | **6E-0358** | 1 | RING-BACKUP | |
| | 14 | 1 | **187-0528** | 1 | VALVE GP-RELIEF | |
| | 15 | 1 | **031-0214** | 2 | BOLT-LOCKING (1/4-20X0.5 IN) | |
| | 16 | 1 | **4T-4524** | 1 | GUARD-DUST | |
| | 17 | 1 | **4T-4528** | 1 | RETAINER | |
| | 18 | 1 | **4T-4520** | 1 | FILTER | |
| | 19 | 1 | **2M-9780** | 1 | SEAL-O-RING | |
| | 20 | 1 | **031-5085** | 1 | BOLT-LOCKING (1/4-20X1.00 IN) | |

## 204-0533 VALVE GP-CONTROL *(contd.)* i01666553

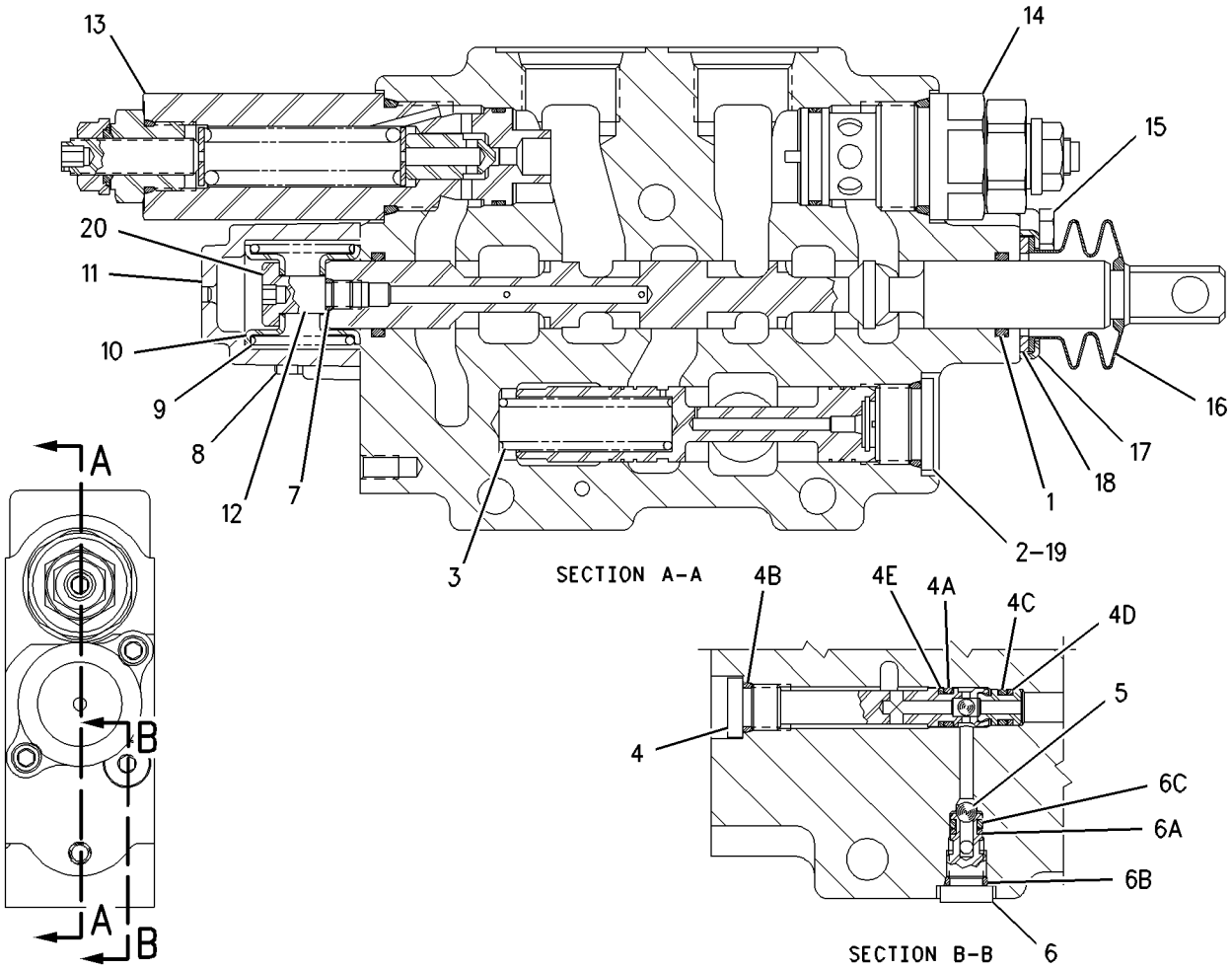


GRAPHIC #1 **<END>** g00817385

# HYDRAULIC SYSTEM

## *9T-5455* VALVE GP-LOAD CONTROL—TILT

**S/N: BXC1-UP; DSX1-UP**
**PART OF 183-8559 LINES GP-LOAD CONTROL VALVE**
**AN ATTACHMENT**

**SMCS-5811** **i02010027**

| NOTE | REF NO | GRAPHIC REF | PART NUMBER | QTY | PART NAME 1 2 3 4 5 6 (PRODUCT LEVEL) | SEE PAGE |
|---|---|---|---|---|---|---|
| | 1 | 1 | **106-9427** | 1 | VALVE GP-SEQUENCE | |
| | | 1 | **6E-5759** | 1 | KIT-SEAL | |
| | 2 | 1 | **9S-8002** | 4 | PLUG | |
| | 3 | 1 | **3J-7354** | 4 | SEAL-O-RING | |
| | 4 | 1 | **106-9430** | 1 | VALVE GP-CHECK | |
| J | | 1 | **2M-9780** | 1 | SEAL-O-RING | |
| J | | 1 | **4M-6582** | 1 | SEAL-O-RING | |
| J | | 1 | **5P-2199** | 1 | RING-BACKUP | |
| C | 5 | 1 | **150-5150** | 1 | VALVE GP-LOAD CONTROL | |
| | | 1 | **6E-5760** | 1 | KIT-SEAL | |
| | 6 | 1 | **9S-8007** | 2 | PLUG | |
| | 7 | 1 | **7J-0204** | 2 | SEAL-O-RING | |
| | 8 | 1 | **4J-9780** | 1 | PLUG-ORIFICE (1/16-27 THD) | |
| | 9 | 1 | **7Y-4224** | 1 | ORIFICE | |
| | 10 | 1 | **9S-8004** | 2 | PLUG | |
| | 11 | 1 | **3J-1907** | 2 | SEAL-O-RING | |
| | | | | | AVAILABLE REPAIR KIT(S): | |
| J | | | **6E-3583** | 1 | KIT-SEAL | |

C-CHANGE FROM PREVIOUS TYPE
J-KIT MARKED J INCLUDES PARTS MARKED J

*9T-5455* **VALVE GP-LOAD CONTROL** *(contd.)* **i02010027**

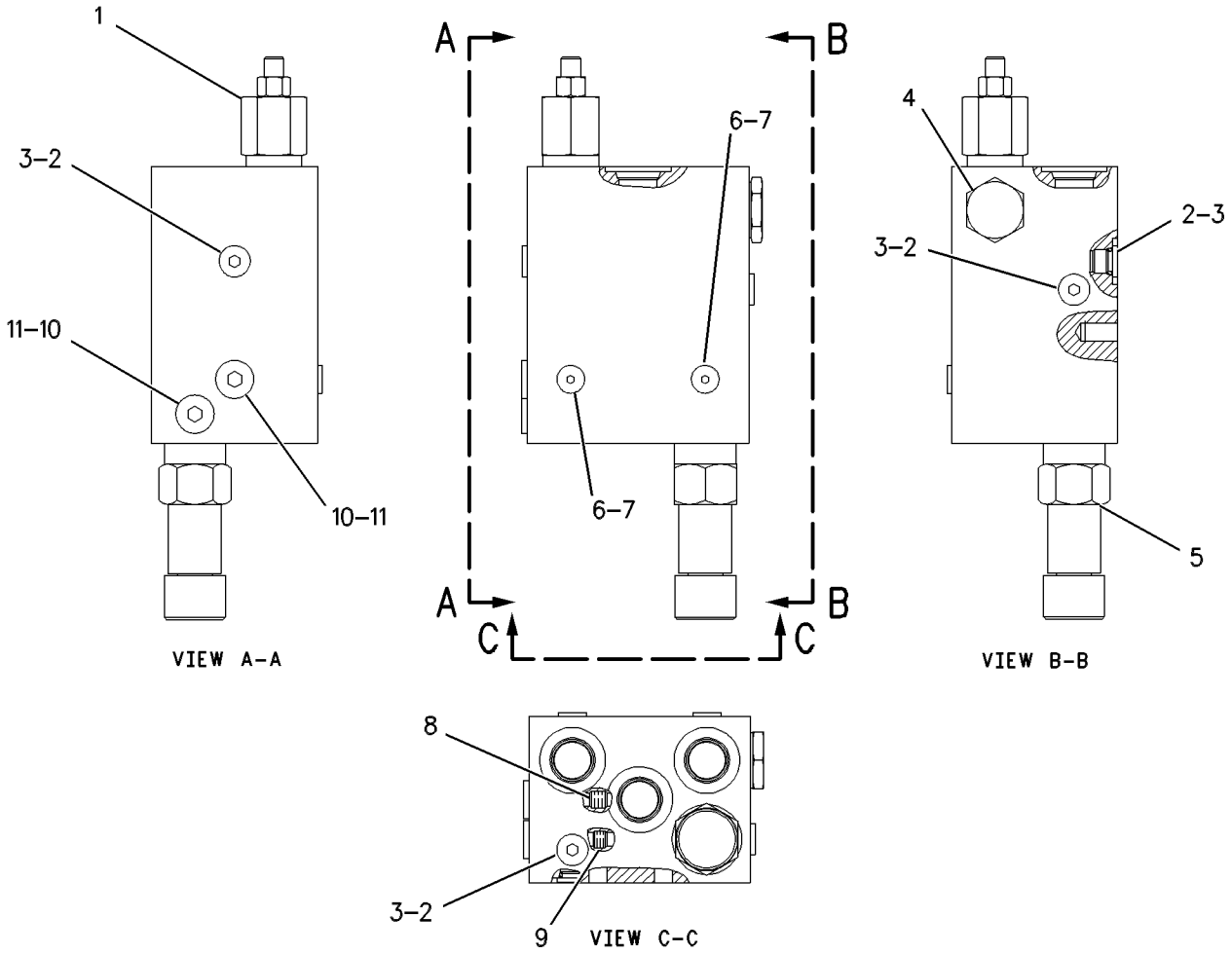


GRAPHIC #1

**<END>**

g00324416

# HYDRAULIC SYSTEM

## 103-5519 VALVE GP-PUMP CONTROL

**S/N: BXC1-UP; DSX1-UP**

**PART OF 235-4110 PUMP GP-PISTON**

**SMCS-5455** **i01739168**

| NOTE | REF NO | GRAPHIC REF | PART NUMBER | QTY | PART NAME 1 2 3 4 5 6 (PRODUCT LEVEL) | SEE PAGE |
|---|---|---|---|---|---|---|
| | 1 | 1 | **105-1434** | 1 | PLUG | |
| | 2 | 1 | **5P-5599** | 1 | SEAL-O-RING | |
| | 3 | 1 | **105-1435** | 1 | SPRING | |
| | 4 | 1 | **105-1436** | 1 | RETAINER-SPRING | |
| | 5 | 1 | **214-0592** | 1 | GASKET | |
| | 6 | 1 | **6V-8236** | 1 | PIN-SPRING | |
| | 7 | 1 | **6E-6528** | 1 | SEAL | |
| M | 8 | 1 | **3T-0849** | 2 | BOLT-SOCKET HEAD (M6X1X25MM) | |
| | 9 | 1 | **105-1437** | 1 | RETAINER-SPRING | |
| | 10 | 1 | **105-1438** | 1 | SPRING | |
| | 11 | 1 | **033-6044** | 1 | SEAL-O-RING | |
| | 12 | 1 | **105-1439** | 1 | ADJUSTER | |
| | 13 | 1 | **105-1440** | 1 | CAP | |
| | 14 | 1 | **105-1441** | 1 | PLUG | |

M-METRIC PART

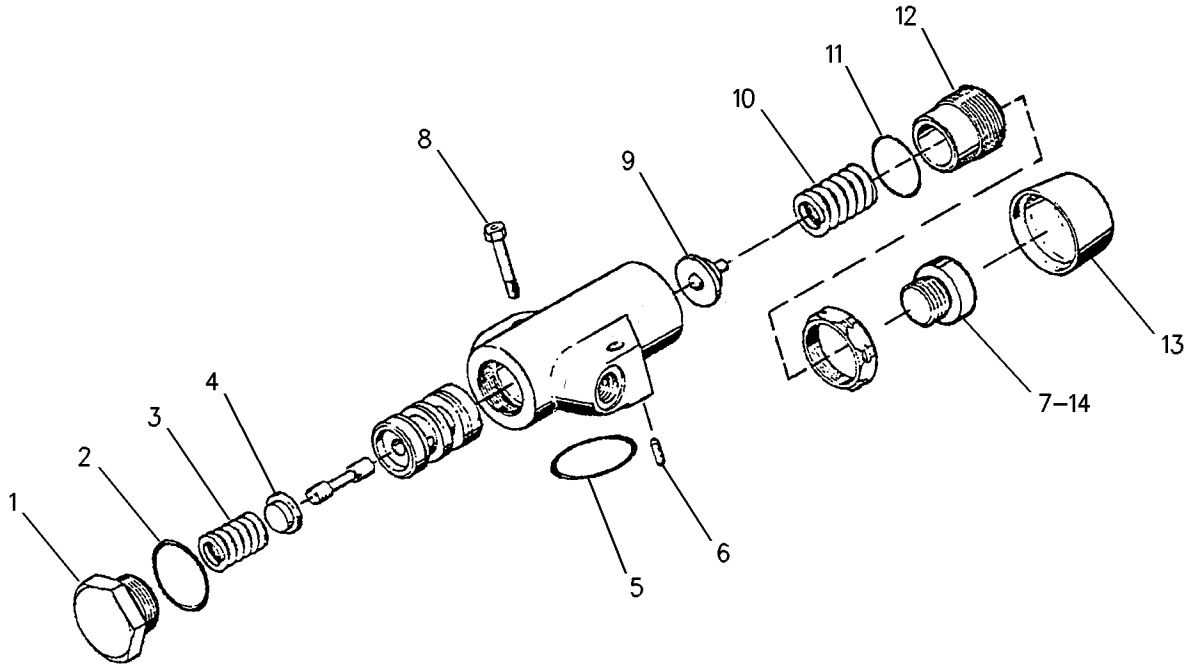


GRAPHIC #1 **<END>** g00890786

# HYDRAULIC SYSTEM

## 213-9804 VALVE GP-PUMP CONTROL

**S/N: BXC1-UP; DSX1-UP**

**PART OF 235-4110 PUMP GP-PISTON**

**SMCS-5455** **i01817581**

| NOTE | REF NO | GRAPHIC REF | PART NUMBER | QTY | PART NAME 1 2 3 4 5 6 (PRODUCT LEVEL) | SEE PAGE |
|---|---|---|---|---|---|---|
| | 1 | 1 | **6E-3268** | 1 | RETAINER-SPRING | |
| | 2 | 1 | **6E-3269** | 1 | RETAINER-SPRING | |
| | 3 | 1 | **200-5359** | 1 | HOUSING | |
| | 4 | 1 | **200-5360** | 1 | HOUSING | |
| | 5 | 1 | **6E-3272** | 1 | SEAT | |
| | 6 | 1 | **6E-3273** | 1 | SEAT | |
| | 7 | 1 | **6E-3274** | 1 | SPRING | |
| | 8 | 1 | **6E-3275** | 1 | SPRING | |
| | 9 | 1 | **6E-3276** | 1 | SPRING | |
| | 10 | 1 | **105-2145** | 1 | VALVE-ORIFICE | |
| | 11 | 1 | **202-7503** | 2 | RETAINER | |
| | 12 | 1 | **6E-6527** | 2 | PLUG | |
| | 13 | 1 | **193-1036** | 1 | SPRING | |
| | 14 | 1 | **033-6043** | 1 | SEAL-O-RING | |
| | 15 | 1 | **6V-8352** | 1 | SEAL-O-RING | |
| | 16 | 1 | **6E-6528** | 2 | SEAL | |
| | 17 | 1 | **5P-9262** | 1 | SEAL-O-RING | |
| | 18 | 1 | **200-5361** | 2 | NUT | |
| | 19 | 1 | **200-5362** | 2 | SEAL-O-RING | |
| | 20 | 1 | **200-5363** | 2 | RING-THRUST | |
| | 21 | 1 | **200-5364** | 2 | CAP | |
| | 22 | 1 | **213-9803** | 1 | PLUG-ORIFICE | |

**213-9804 VALVE GP-PUMP CONTROL** *(contd. )* **i01817581**

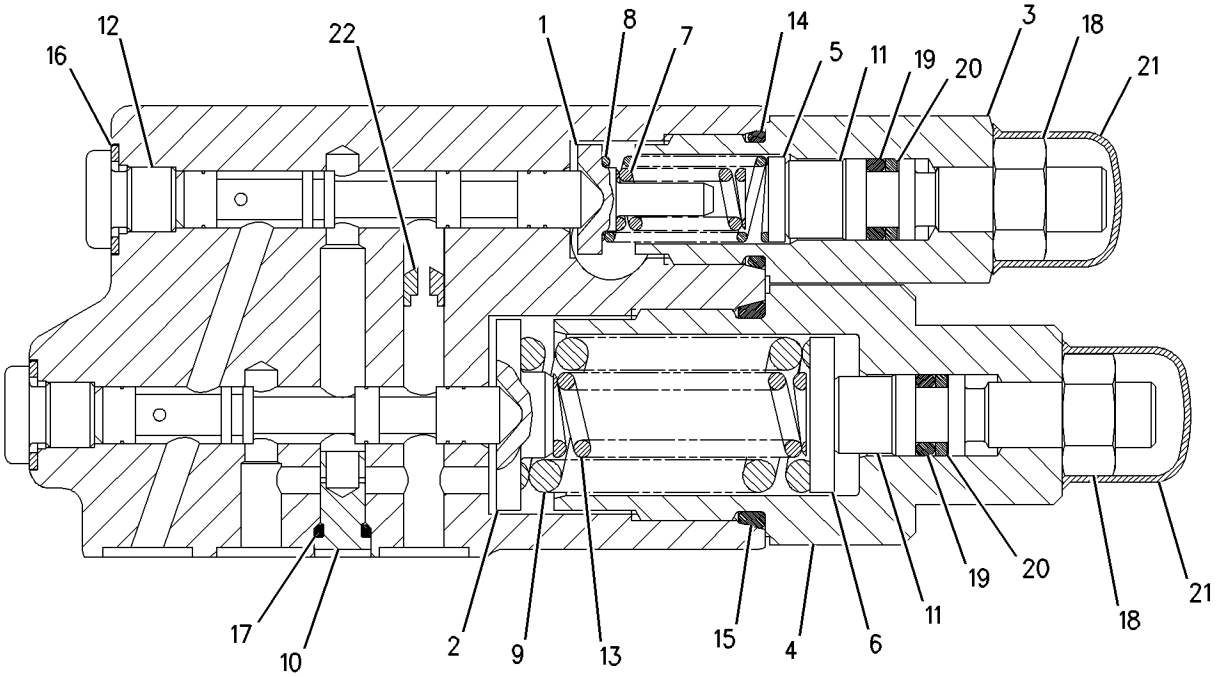


GRAPHIC #1 **<END>** g00844524

# HYDRAULIC SYSTEM

## 3E-8622 VALVE GP-SOLENOID

**S/N: BXC1-UP; DSX1-UP**

**PART OF 175-7618, 183-8523, 183-8530, 183-8532 LINES GP-SIDESHIFT LOCK AN ATTACHMENT**

**SMCS-5132, 5479** **i01734427**

| NOTE | REF NO | GRAPHIC REF | PART NUMBER | QTY | PART NAME 1 2 3 4 5 6 (PRODUCT LEVEL) | SEE PAGE |
|---|---|---|---|---|---|---|
| | 1 | 1 | **3J-9196** | 1 | NUT-JAM (1/2-20 THD) | |
| | 2 | 1 | **107-2066** | 1 | CARTRIDGE AS | |
| | | 1 | **7T-1342** | 1 | KIT-HARDWARE | |
| | | | | | (INCLUDES SEALS, WASHER, NUT & RING) | |
| | 3 | 1 | **3E-8621** | 1 | COIL AS | |
| | | 1 | **3E-3365** | 1 | WEDGE-RECEPTACLE LOCK (2 PIN) | |
| | | 1 | **102-8802** | 1 | KIT-RECEPTACLE (2 PIN) | |
| | | | | | (KIT SERVICES RECEPTACLE AS AND WEDGE) | |
| | | 1 | **186-3735** | 2 | PIN-CONNECTOR | |
| | 4 | 1 | **1S-9593** | 2 | STRAP-CABLE | |

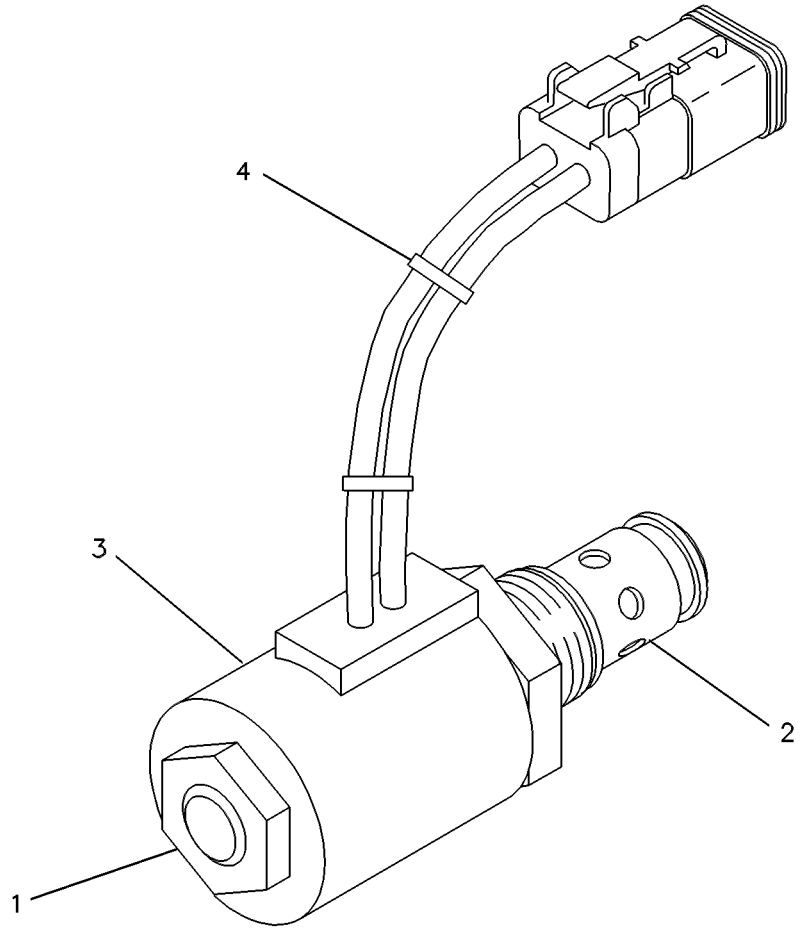


GRAPHIC #1 **<END>** g00131580

# HYDRAULIC SYSTEM

## 179-5593 VALVE GP-SOLENOID

**S/N: BXC1-UP; DSX1-UP**
**12 VDC**
**PART OF 240-3184 VALVE AR-BANK 4, 240-3185 VALVE AR-BANK 5, 240-3186 VALVE AR-BANK 6**
**AN ATTACHMENT**

**SMCS-5132, 5479** **i01581738**

| NOTE | REF NO | GRAPHIC REF | PART NUMBER | QTY | PART NAME 1 2 3 4 5 6 (PRODUCT LEVEL) | SEE PAGE |
|---|---|---|---|---|---|---|
| | 1 | 1 | **156-5970** | 1 | NUT (1/2-20-2B THD) | |
| | 2 | 1 | **3E-8621** | 1 | COIL AS | |
| | | 1 | **186-3735** | 2 | PIN-CONNECTOR | |
| | | 1 | **1S-9593** | 1 | STRAP-CABLE | |
| | | 1 | **3E-3365** | 1 | WEDGE-RECEPTACLE LOCK (2 PIN) | |
| | | 1 | **102-8802** | 1 | KIT-RECEPTACLE (2 PIN) | |
| | | | | | (KIT SERVICES RECEPTACLE AS. AND WEDGE) | |
| | 3 | 1 | **179-5592** | 1 | VALVE AS | |
| | | 1 | **156-5970** | 1 | NUT (1/2-20-2B THD) | |
| | | | | | AVAILABLE REPAIR KIT(S): | |
| | | | **189-2102** | 1 | KIT-SEAL | |

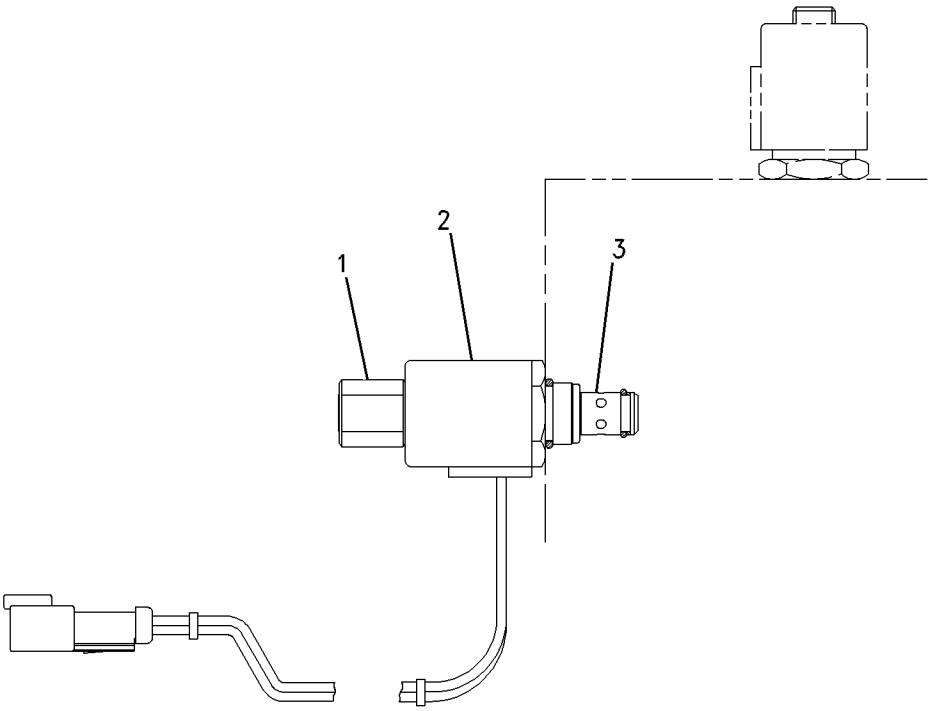


GRAPHIC #1 **<END>** g00751659

# IMPLEMENTS

## *111-0339* ARM GP-LIFT

**S/N: BXC1-UP; DSX1-UP**

**PART OF 112-1827 LOADER AR**

**SMCS-6118, 6119** **i01876854**

| NOTE | REF NO | GRAPHIC REF | PART NUMBER | QTY | PART NAME 1 2 3 4 5 6 (PRODUCT LEVEL) | SEE PAGE |
|---|---|---|---|---|---|---|
| | 1 | 1 | **3B-8488** | 8 | FITTING-GREASE (1/8-27 THD) | |
| | 2 | 1 | **3B-8489** | 14 | FITTING-GREASE | |
| | 3 | 1 | **6V-3213** | 18 | RING-RETAINING | |
| | 4 | 1 | **6V-8144** | 15 | RING | |
| | 5 | 1 | **9R-0109** | 16 | WASHER (41X64X3MM THK) | |
| | 6 | 1 | **9R-0158** | 18 | WASHER (46X69X3MM THK) | |
| B | 7 | 1 | **9R-4066** | 4 | WASHER (61X98X4MM THK) | |
| | 8 | 1 | **9R-5301** | 1 | PIN-COTTER | |
| B | 9 | 1 | **9R-8390** | 6 | SPACER (61X98X1MM THK) (1MM THK) | |
| | 10 | 1 | **111-4331** | 2 | LINK AS | |
| | | 1 | **116-4825** | 4 | BEARING-SLEEVE | |
| | 11 | 1 | **111-4332** | 4 | PLATE | |
| | 12 | 1 | **111-4333** | 2 | SPACER (46X63.5X37.1MM THK) (37.1MM THK) | |
| | 13 | 1 | **111-4334** | 2 | PIN | |
| | 14 | 1 | **111-4335** | 2 | SPACER (46X63.5X27.1MM THK) (27.1MM THK) | |
| | 15 | 1 | **111-4336** | 1 | LINK AS | |
| | | 1 | **9R-1496** | 2 | BEARING-SLEEVE (40.196MM ID) | |
| | | 1 | **116-4825** | 2 | BEARING-SLEEVE (45.198MM ID) | |
| B | 16 | 1 | **111-4337** | 14 | WASHER (46X70X1MM THK) (1MM THK) | |
| | 17 | 1 | **111-4338** | 1 | LINK | |
| B | 18 | 1 | **128-7903** | 2 | SPACER (61X114.3X3MM THK) | |
| | 19 | 1 | **111-4340** | 1 | PIN | |
| | 20 | 1 | **111-4341** | 2 | PIN | |
| | 21 | 1 | **111-4342** | 4 | PIN | |
| | 22 | 1 | **111-4343** | 5 | PIN | |
| | 23 | 1 | **112-0943** | 1 | ARM AS-LIFT | |
| M | 23A | 1 | **8T-3851** | 4 | BOSS-WELD (M10X1.5MM) | |
| | 23B | 1 | **9R-0111** | 4 | BEARING-SLEEVE (40.288MM ID) | |
| | 23C | 1 | **9R-0119** | 2 | BOSS (53MM ID) | |
| | 23D | 1 | **9R-0411** | 4 | BEARING-SLEEVE (45.295MM ID) | |
| | 23E | 1 | **9R-2821** | 2 | BOSS (M10X15MM) (8.7MM ID) | |
| | 23F | 1 | **9R-6690** | 4 | BEARING-SLEEVE | |
| | 23G | 1 | **124-5246** | 1 | PLATE AS | |
| | 23H | 1 | **126-1448** | 1 | PLATE AS | |
| | 23I | 1 | **126-9091** | 1 | PLATE | |
| | 24 | 1 | **112-0950** | 1 | BRACE AS | |
| | 25 | 1 | **114-3836** | 2 | PIN | |
| | 26 | 1 | **118-1348** | 1 | PIN | |
| B | 27 | 1 | **119-4594** | 8 | WASHER (41X64X1MM THK) | |
| | 28 | 1 | **122-4954** | 1 | PIN AS | |
| | 29 | 1 | **125-1037** | 2 | PIN AS | |
| | 30 | 1 | **127-8987** | 2 | RING-RETAINING | |
| | 31 | 1 | **130-5451** | 2 | PIN | |
| M | 32 | 1 | **6V-7687** | 4 | LOCKNUT | |
| M | 33 | 1 | **8T-4176** | 4 | BOLT (M12X1.75X90MM) | |
| B | 34 | 1 | **128-7905** | 2 | SPACER (61X114.3X1MM THK) | |

B-USE AS REQUIRED
M-METRIC PART

*111-0339* **ARM GP-LIFT** *(contd.)* **i01876854**

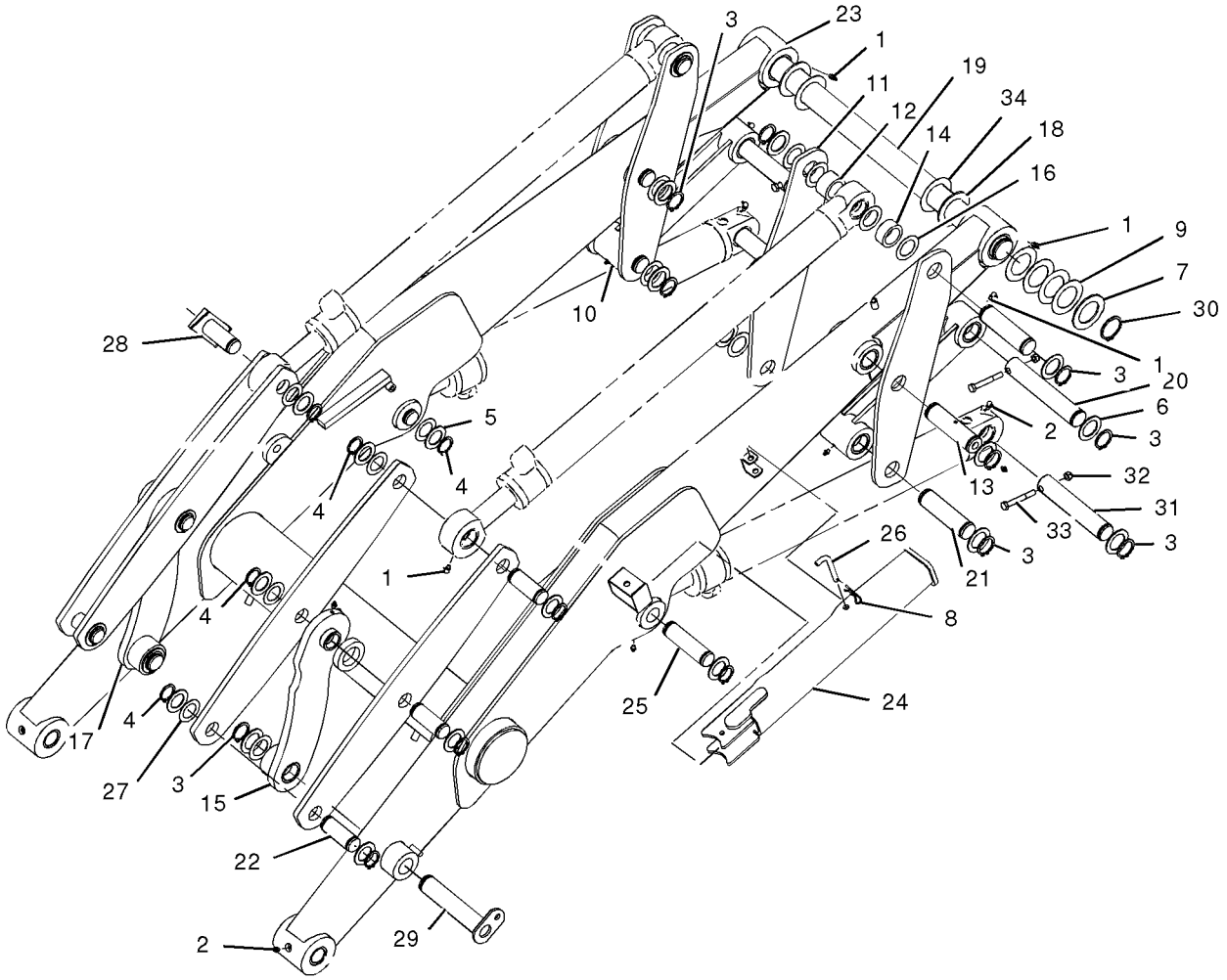


GRAPHIC #1 **<END>** g00955581

# IMPLEMENTS

## *185-1927* BOOM GP

**S/N: BXC1-UP; DSX1-UP**

**PART OF 185-1932 BOOM GP**

**SMCS-6501** **i02003681**

| NOTE | REF NO | GRAPHIC REF | PART NUMBER | QTY | PART NAME 1 2 3 4 5 6 (PRODUCT LEVEL) | SEE PAGE |
|---|---|---|---|---|---|---|
| | 1 | 1 | **244-1989** | 1 | BOOM AS | |
| | 1A | 1 | **8Y-4489** | 4 | BOSS (M10X35MM) | |
| | 1B | 1 | **9R-8523** | 2 | PIN | |
| | 1C | 1 | **106-0421** | 3 | BOSS | |
| | 1D | 1 | **111-0483** | 2 | BOSS (M10X1.5MM) | |
| | 1E | 1 | **174-6812** | 2 | BOSS | |
| | 2 | 1 | **3B-8488** | 3 | FITTING-GREASE | |
| | 3 | 1 | **9R-9812** | 2 | PIN | |
| M | 4 | 1 | **8T-5001** | 2 | BOLT (M12X1.75X130MM) | |
| M | 5 | 1 | **6V-7687** | 2 | LOCKNUT (M12X1.75THD) | |
| | 6 | 1 | **3B-8489** | 1 | FITTING-GREASE | |
| | 7 | 1 | **179-9961** | 1 | PLUG-PROTECTIVE | |

M-METRIC PART

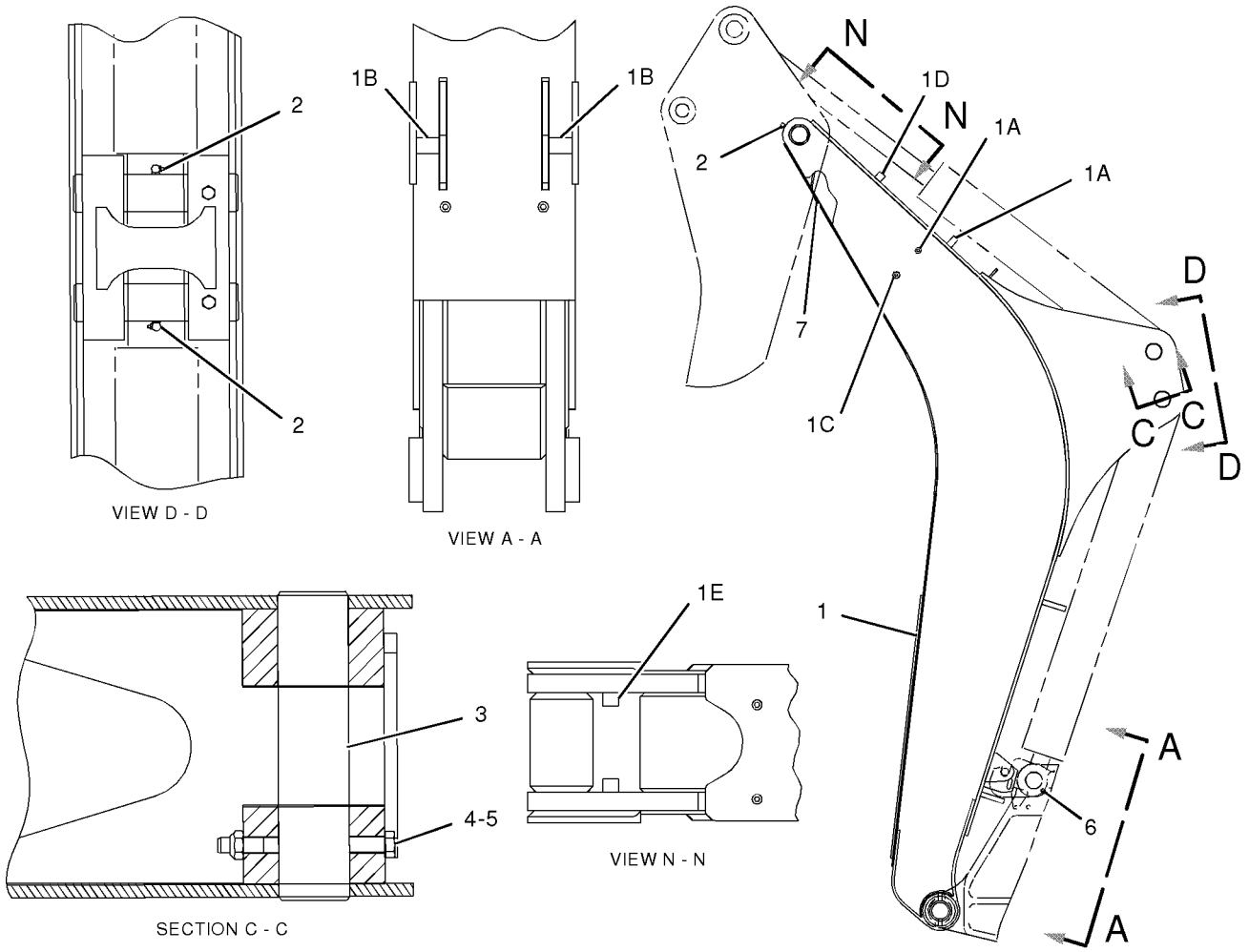


GRAPHIC #1 **<END>** g01036322

# IMPLEMENTS

## *185-1932* BOOM GP

**S/N: BXC1-UP; DSX1-UP**

**PART OF 214-6993, 214-6994 COMMON AR**

**SMCS-6501** **i01340517**

| NOTE | PART NUMBER | QTY | PART NAME 1 2 3 4 5 6 (PRODUCT LEVEL) | SEE PAGE |
|---|---|---|---|---|
| Y | *185-1927* | 1 | BOOM GP | 588 |

Y-SEPARATE ILLUSTRATION

**<END>**

# IMPLEMENTS

## *120-9289* BRACKET GP-TRANSPORT

**S/N: BXC1-UP; DSX1-UP**
**PART OF 119-1530 SHIPPING AR-BUCKET**
**AN ATTACHMENT**

**SMCS-7505** **i01500844**

| NOTE | REF NO | GRAPHIC REF | PART NUMBER | QTY | PART NAME 1 2 3 4 5 6 (PRODUCT LEVEL) | SEE PAGE |
|---|---|---|---|---|---|---|
| | 1 | 1 | **3B-5322** | 2 | PIN-COTTER | |
| | 2 | 1 | **9R-0109** | 2 | WASHER (3MM THK) | |
| B | 3 | 1 | **9R-4066** | 6 | WASHER (4MM THK) | |
| | 4 | 1 | **9R-6014** | 4 | TUBE | |
| | 5 | 1 | **034-1432** | 2 | STRAP-CABLE | |
| | 6 | 1 | **120-9332** | 2 | BLOCK | |
| | 7 | 1 | **120-9333** | 1 | TUBE | |

B-USE AS REQUIRED

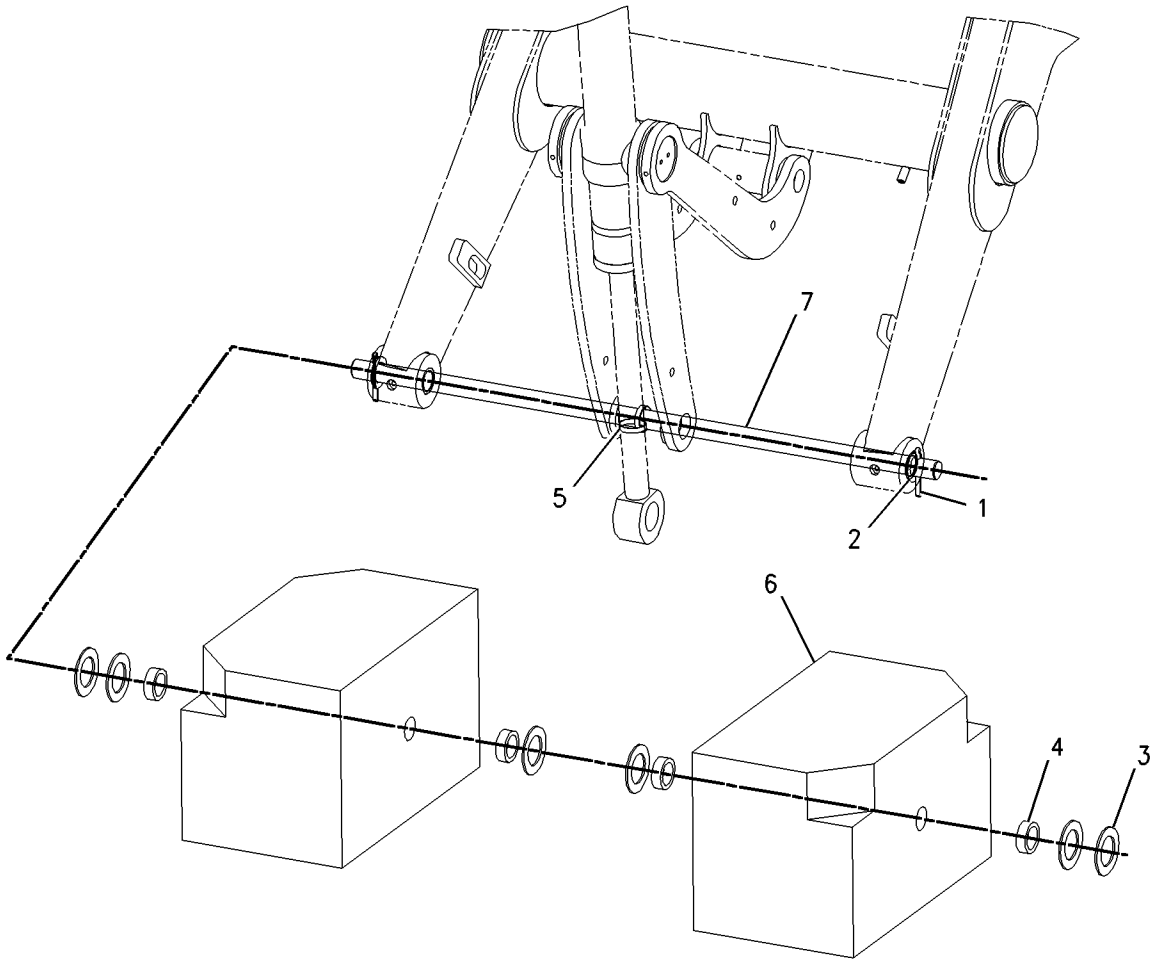


GRAPHIC #1 **<END>** g00778759

# IMPLEMENTS

## *124-5525* BRACKET GP-TRANSPORT

**S/N: BXC1-UP; DSX1-UP**
**AN ATTACHMENT**

**SMCS-7505** **i01520566**

| NOTE | REF NO | GRAPHIC REF | PART NUMBER | QTY | PART NAME 1 2 3 4 5 6 (PRODUCT LEVEL) | SEE PAGE |
|---|---|---|---|---|---|---|
| | 1 | 1 | **3B-5322** | 2 | PIN-COTTER | |
| B | 2 | 1 | **9R-4066** | 4 | WASHER (4MM THK) | |
| | 3 | 1 | **120-9332** | 2 | BLOCK | |
| | 4 | 1 | **120-9333** | 1 | TUBE | |
| | 5 | 1 | **125-4594** | 2 | PLATE AS | |
| | 6 | 1 | **111-4335** | 4 | SPACER (25MM THK) | |

B-USE AS REQUIRED

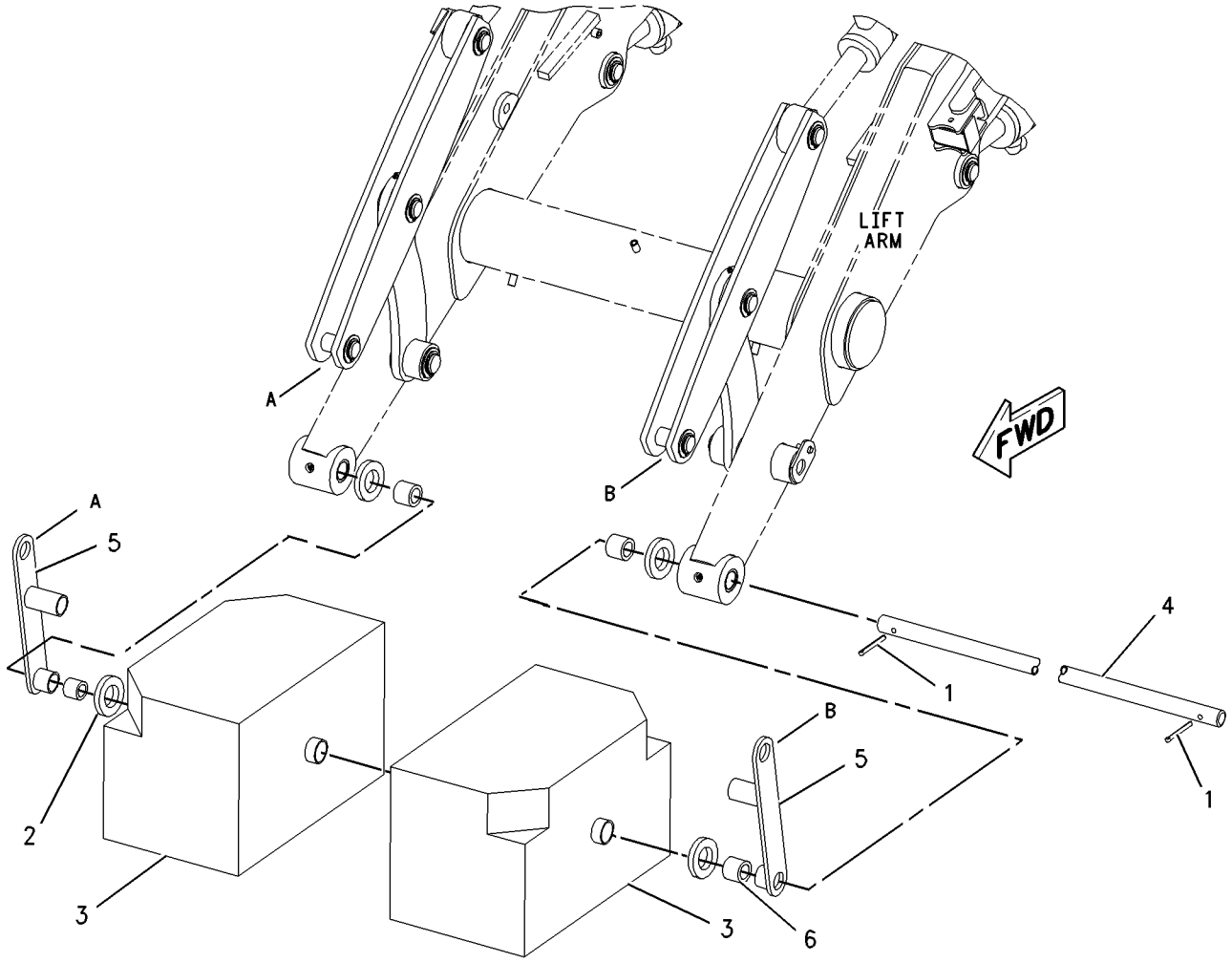


GRAPHIC #1 **<END>** g00763114

# *184-6784* HOUSING AS-EXTENDABLE STICK

**S/N: BXC1-UP; DSX1-UP**
**PART OF 184-6786, 184-9754 STICK GP-EXTENDABLE**
**AN ATTACHMENT**

**SMCS-6502** **i01391837**

| NOTE | REF NO | GRAPHIC REF | PART NUMBER | QTY | PART NAME 1 2 3 4 5 6 (PRODUCT LEVEL) | SEE PAGE |
|---|---|---|---|---|---|---|
| | 1 | 1 | **9R-9254** | 2 | BOSS | |
| | 2 | 1 | **9R-0139** | 2 | BEARING-SLEEVE | |
| | 3 | 1 | **8Y-4489** | 2 | BOSS | |
| | 4 | 1 | **107-6711** | 2 | BLOCK | |
| | 5 | 1 | **188-9954** | 2 | STOP | |
| | 6 | 1 | **187-0576** | 2 | BLOCK | |
| | 7 | 1 | **9R-9187** | 2 | GUSSET | |
| | 8 | 1 | **158-8778** | 2 | BOSS | |

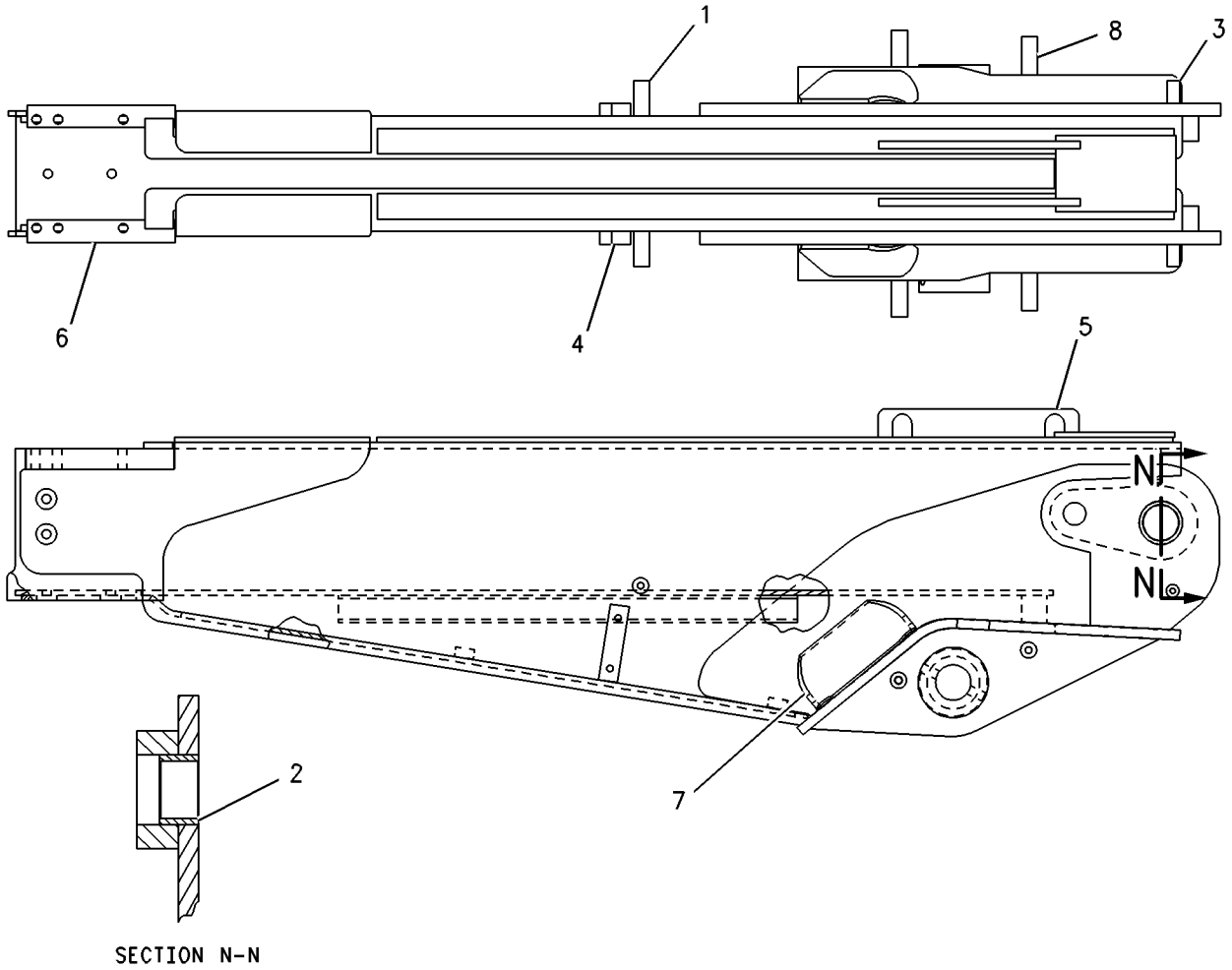


GRAPHIC #1 **<END>** g00706322

# *175-7877* LINK GP-SHIPPING

**S/N: BXC1-UP; DSX1-UP**

**PART OF 240-8689, 240-8690, 240-8691, 240-8692, 240-8699, 240-8700, 240-8701, 240-8702 BACKHOE AR-EXTENDABLE STICK, 240-8683, 240-8684, 240-8685, 240-8686, 240-8687, 240-8688, 240-8693, 240-8694, 240-8695, 240-8696, 240-8697, 240-8698 BACKHOE AR-STANDARD STICK**

**AN ATTACHMENT**

**SMCS-6513** **i01190768**

| NOTE | PART NUMBER | QTY | PART NAME 1 2 3 4 5 6 (PRODUCT LEVEL) | SEE PAGE |
|---|---|---|---|---|
| | 120-9286 | 1 | PLATE | |

**<END>**

# *151-7928* LINKAGE GP-BACKHOE BUCKET

**S/N: BXC1-UP; DSX1-UP**

**PART OF 240-8689, 240-8690, 240-8691, 240-8692, 240-8699, 240-8700, 240-8701, 240-8702 BACKHOE AR-EXTENDABLE STICK, 240-8683, 240-8684, 240-8685, 240-8686, 240-8687, 240-8688, 240-8693, 240-8694, 240-8695, 240-8696, 240-8697, 240-8698 BACKHOE AR-STANDARD STICK**

**AN ATTACHMENT**

**SMCS-6513** **i01994397**

| NOTE | REF NO | GRAPHIC REF | PART NUMBER | QTY | PART NAME 1 2 3 4 5 6 (PRODUCT LEVEL) | SEE PAGE |
|---|---|---|---|---|---|---|
| | 1 | 1 | **9R-0158** | 10 | WASHER (46X69X3MM THK) | |
| | 2 | 1 | **9R-1510** | 13 | WASHER (51X82X4MM THK) | |
| | 3 | 1 | **6V-4364** | 4 | RING-RETAINING | |
| | 4 | 1 | **145-8337** | 1 | GUIDE AS-RH | |
| | | 1 | **9R-0162** | 1 | BEARING | |
| | | 1 | **9R-0411** | 1 | BEARING-SLEEVE | |
| | 5 | 1 | **145-8344** | 1 | GUIDE AS-LH | |
| | | 1 | **9R-0162** | 2 | BEARING | |
| | | 1 | **9R-0411** | 1 | BEARING-SLEEVE | |
| | 6 | 1 | **154-5265** | 1 | LINK AS | |
| | | 1 | **9R-3092** | 2 | BEARING-SLEEVE | |
| | | 1 | **9R-0147** | 2 | BEARING | |
| | 7 | 1 | **154-5277** | 1 | PIN | |
| | 8 | 1 | **154-5278** | 2 | PIN | |
| | 9 | 1 | **154-5279** | 1 | PIN | |
| | 10 | 1 | **154-5280** | 1 | PIN | |
| | 11 | 1 | **239-9435** | 1 | FILM-INSTRUCTION | |
| | 12 | 1 | **3B-5319** | 4 | PIN-COTTER | |
| | 13 | 1 | **3B-8489** | 5 | FITTING-GREASE | |
| | 14 | 1 | **6V-3213** | 2 | RING-RETAINING | |

*151-7928* **LINKAGE GP-BACKHOE BUCKET** *(contd.)* **i01994397**

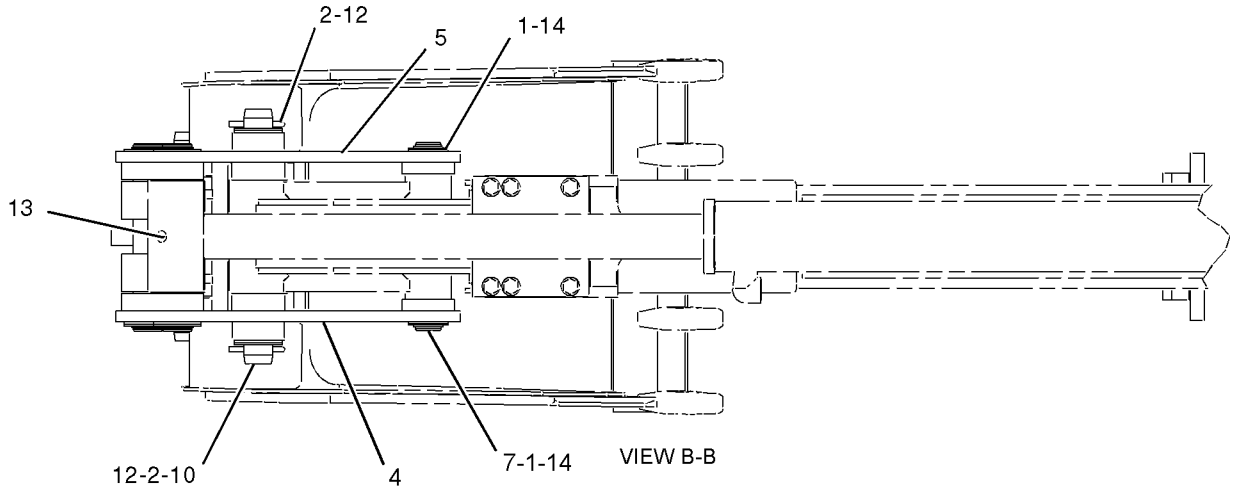


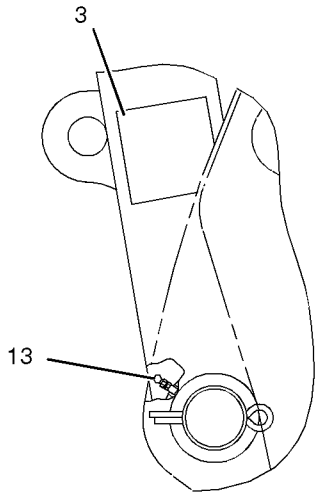


VIEW OF AREA A

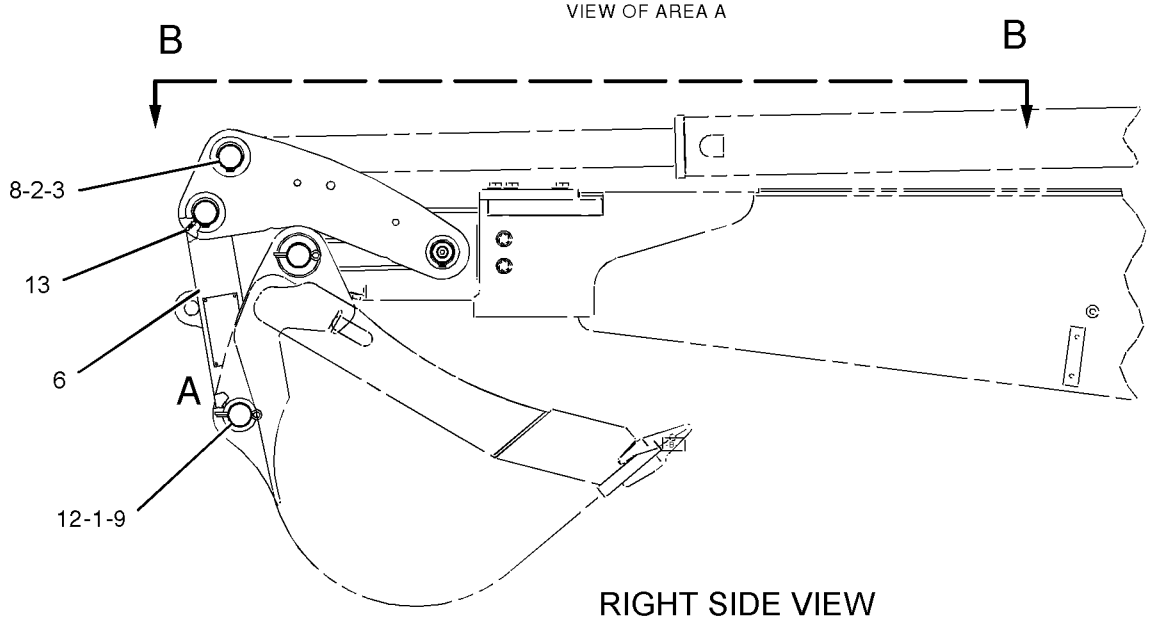


RIGHT SIDE VIEW

GRAPHIC #1 **<END>** g01032311

# *167-8330* LINKAGE GP-BACKHOE BUCKET

**S/N: BXC1-UP; DSX1-UP**

**PART OF 240-8490, 240-8491, 240-8492, 240-8493, 240-8504, 240-8505, 240-8506, 240-8507 BACKHOE AR-EXTENDABLE STICK**

**AN ATTACHMENT**

**SMCS-6513** **i01498017**

| NOTE | REF NO | GRAPHIC REF | PART NUMBER | QTY | PART NAME 1 2 3 4 5 6 (PRODUCT LEVEL) | SEE PAGE |
|---|---|---|---|---|---|---|
| | 1 | 1 | **9R-0158** | 7 | WASHER | |
| | 2 | 1 | **9R-1510** | 8 | WASHER (4MM THK) | |
| | 3 | 1 | **9R-9105** | 2 | PIN AS | |
| | 4 | 1 | **154-5277** | 1 | PIN | |
| | 5 | 1 | **154-5278** | 2 | PIN | |
| | 6 | 1 | **172-4823** | 1 | LINK AS | |
| | 7 | 1 | **191-5011** | 1 | GUIDE AS | |
| | | 1 | **9R-0162** | 2 | BEARING | |
| | | 1 | **9R-0411** | 1 | BEARING-SLEEVE | |
| | 8 | 1 | **191-5012** | 1 | GUIDE AS | |
| | | 1 | **9R-0162** | 2 | BEARING | |
| | | 1 | **9R-0411** | 1 | BEARING-SLEEVE | |
| | 9 | 1 | **3B-5319** | 2 | COTTER | |
| | 10 | 1 | **3B-8489** | 5 | FITTING-GREASE | |
| | 11 | 1 | **6V-3213** | 2 | RING-RETAINING | |
| | 12 | 1 | **6V-4364** | 4 | RING-RETAINING | |

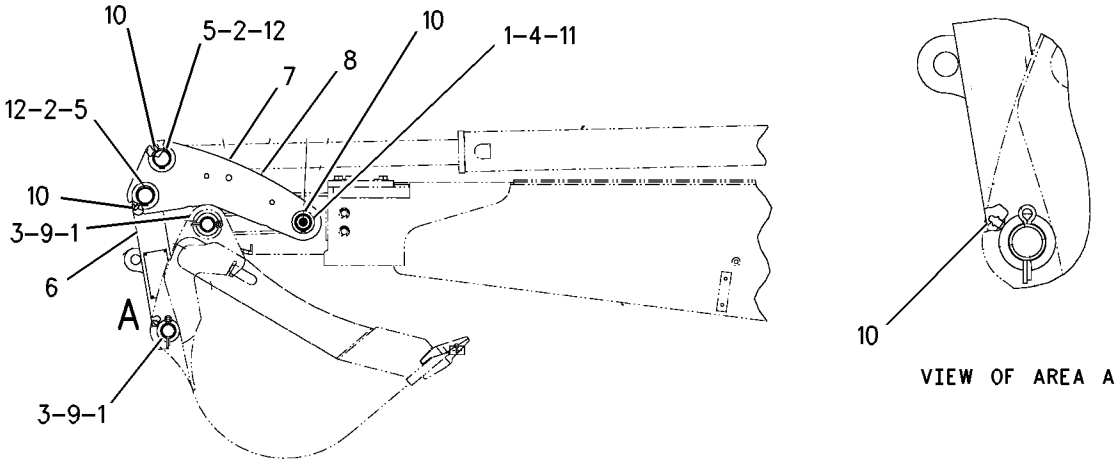


GRAPHIC #1 **<END>** g00719753

# IMPLEMENTS

## *112-1827* LOADER AR

**S/N: BXC1-UP; DSX1-UP**

**PART OF 214-6993, 214-6994 COMMON AR**

**SMCS-6100** **i00796702**

| NOTE | PART NUMBER | QTY | PART NAME 1 2 3 4 5 6 (PRODUCT LEVEL) | SEE PAGE |
|---|---|---|---|---|
| Y | *111-0339* | 1 | ARM GP-LIFT | 586 |
| Y | *122-1644* | 1 | WIRING GP-KICKOUT & POSITIONER | 195 |

Y-SEPARATE ILLUSTRATION

**<END>**

# *113-0081* LOCK GP-STABILIZER LEG

**S/N: BXC1-UP; DSX1-UP**
**EUROPEAN COMMUNITY**
**PART OF 190-2802 CONVERSION AR-CERTIFICATION**
**AN ATTACHMENT**

**SMCS-7222** **i01781045**

| NOTE | REF NO | GRAPHIC REF | PART NUMBER | QTY | PART NAME 1 2 3 4 5 6 (PRODUCT LEVEL) | SEE PAGE |
|---|---|---|---|---|---|---|
| | 1 | 1 | **115-1858** | 2 | BRACKET | |
| | 2 | 1 | **221-7170** | 2 | SLING AS | |
| | 3 | 1 | **8T-4122** | 2 | WASHER-HARD (17X32X3.5MM THK) | |
| M | 4 | 1 | **8T-4132** | 2 | NUT (M16X2 THD) | |
| M | 5 | 1 | **8T-4193** | 2 | BOLT (M16X2X50MM) | |

M-METRIC PART

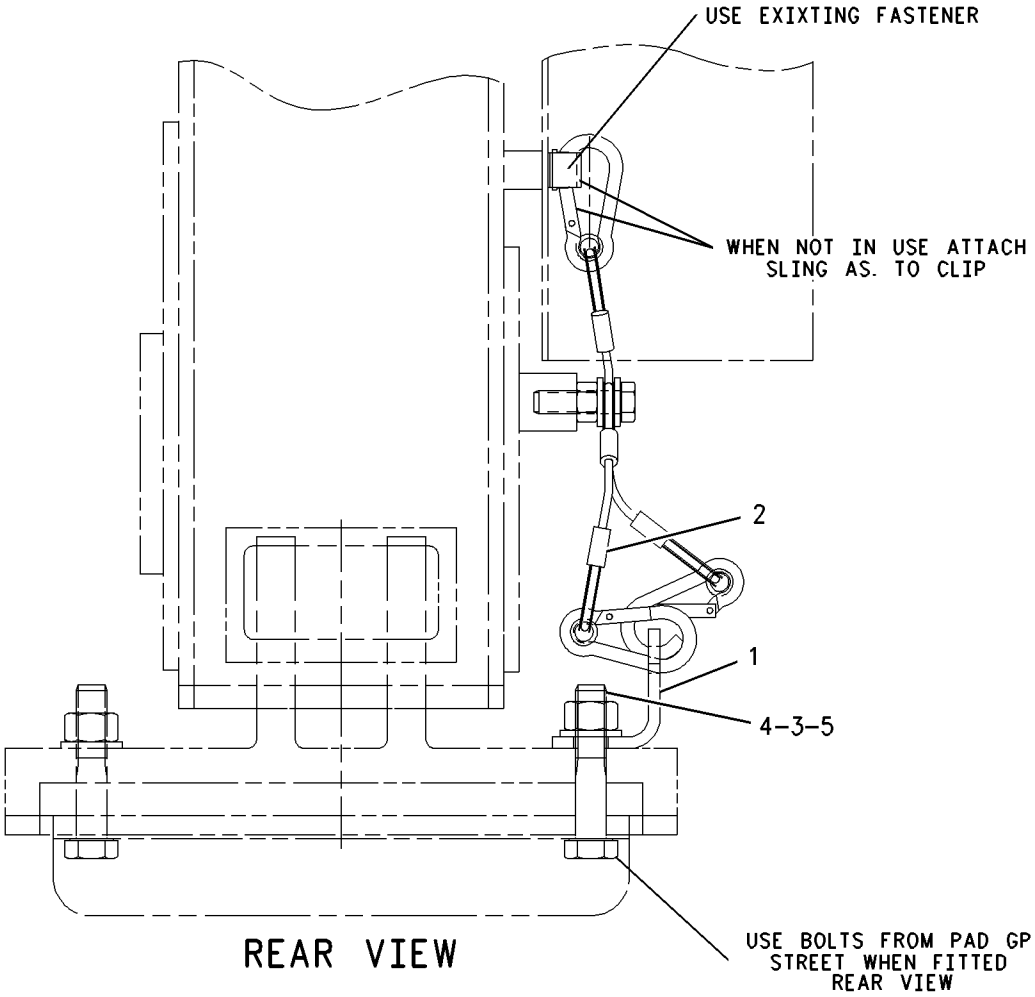


GRAPHIC #1 **<END>** g00910751

# *121-9797* LOCK GP-TRANSPORT—LOADER

**S/N: BXC1-UP; DSX1-UP**
**PART OF 190-2803, 190-6413 CONVERSION AR-CERTIFICATION**
**AN ATTACHMENT**

**SMCS-7505** **i00534753**

| NOTE | REF NO | GRAPHIC REF | PART NUMBER | QTY | PART NAME 1 2 3 4 5 6 (PRODUCT LEVEL) | SEE PAGE |
|---|---|---|---|---|---|---|
| | 1 | 1 | **5P-0370** | 1 | LOCKPIN | |
| | 2 | 1 | **113-8087** | 1 | BRACE AS | |
| | 3 | 1 | **118-1348** | 1 | PIN | |
| | 4 | 1 | **126-4974** | 1 | PLATE AS | |
| | 5 | 1 | **134-4807** | 1 | PIN | |
| | 6 | 1 | **9R-5301** | 1 | PIN-COTTER | |

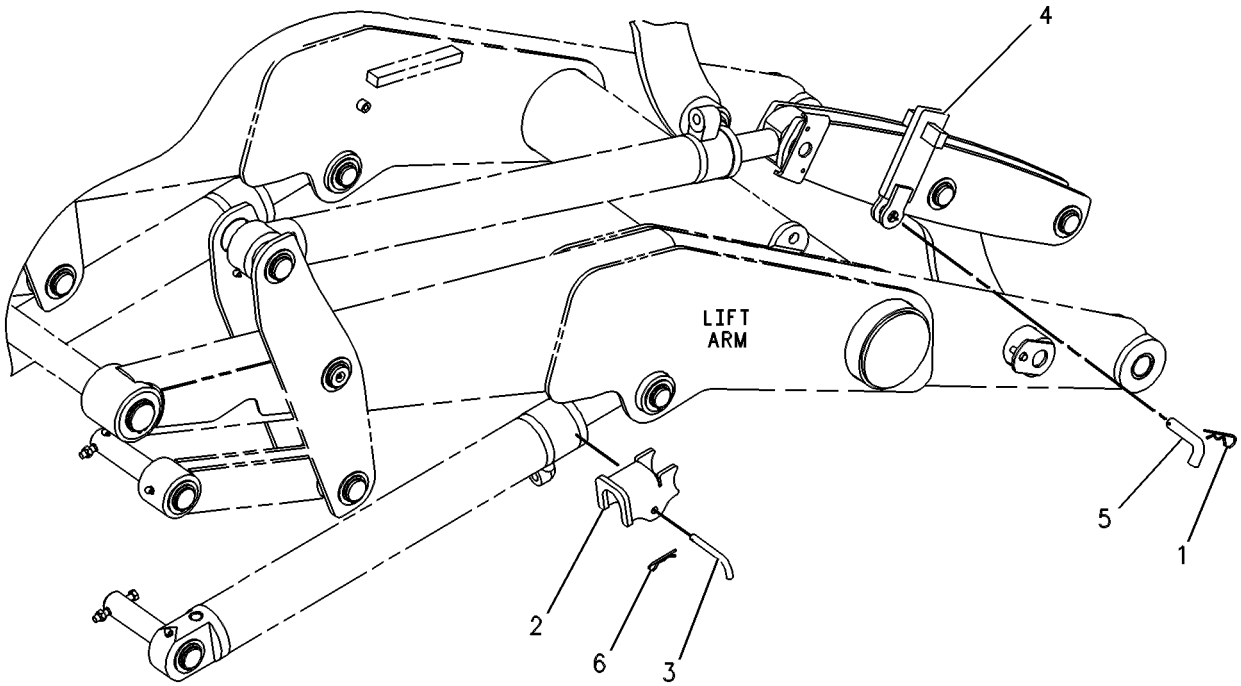


GRAPHIC #1 **<END>** g00258876

# IMPLEMENTS

## *122-8037* LOCK GP-TRANSPORT–LOADER

**S/N: BXC1-UP; DSX1-UP**

**AN ATTACHMENT**

**SMCS-7505** **i00999876**

| NOTE | REF NO | GRAPHIC REF | PART NUMBER | QTY | PART NAME 1 2 3 4 5 6 (PRODUCT LEVEL) | SEE PAGE |
|---|---|---|---|---|---|---|
| | 1 | 1 | **122-8032** | 1 | BRACE AS | |
| | 2 | 1 | **113-9090** | 1 | PIN AS | |
| | 3 | 1 | **9R-5301** | 1 | PIN-COTTER | |
| | 4 | 1 | **9R-6140** | 1 | LINK | |
| | 5 | 1 | **9S-1315** | 1 | PIN-CLEVIS | |
| | 6 | 1 | **6S-6646** | 1 | PIN | |

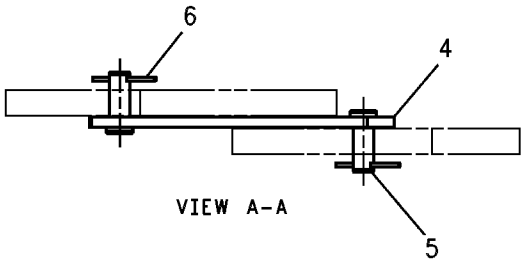


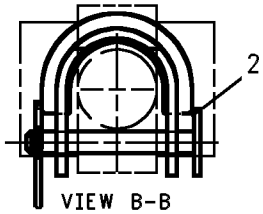


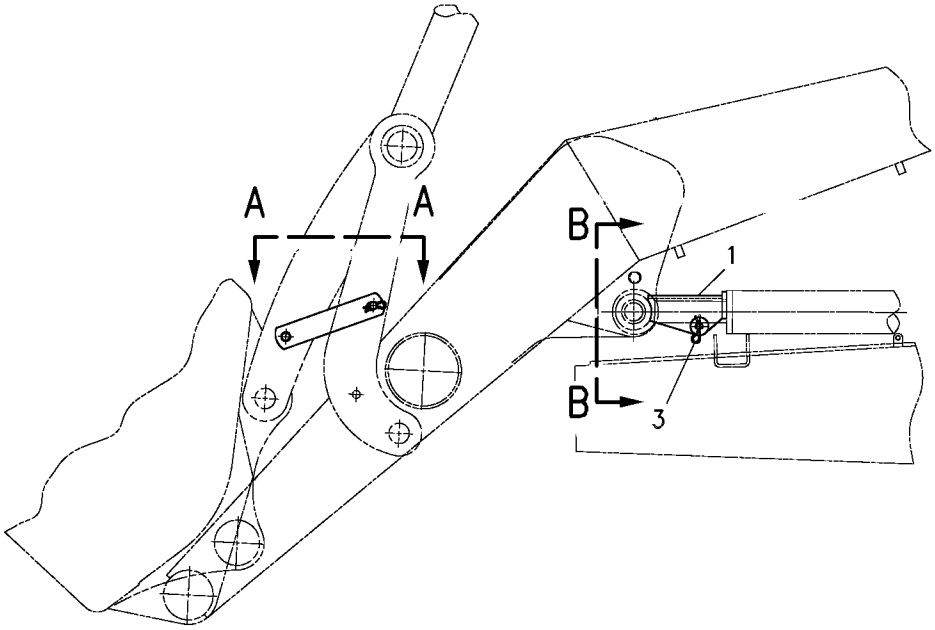


GRAPHIC #1 **<END>** g00511968

# *177-4726* LOCK GP-TRANSPORT—EXTENDABLE STICK

**S/N: BXC1-UP; DSX1-UP**
**HIGH ROTATION BUCKET**
**PART OF 190-6413 CONVERSION AR-CERTIFICATION**
**AN ATTACHMENT**

**SMCS-7505** **i01494468**

| NOTE | REF NO | GRAPHIC REF | PART NUMBER | QTY | PART NAME 1 2 3 4 5 6 (PRODUCT LEVEL) | SEE PAGE |
|---|---|---|---|---|---|---|
| | 1 | 1 | **177-4729** | 1 | CABLE AS | |
| | 2 | 1 | **9R-5301** | 2 | PIN-COTTER | |
| | 3 | 1 | **9R-9028** | 1 | PIN | |

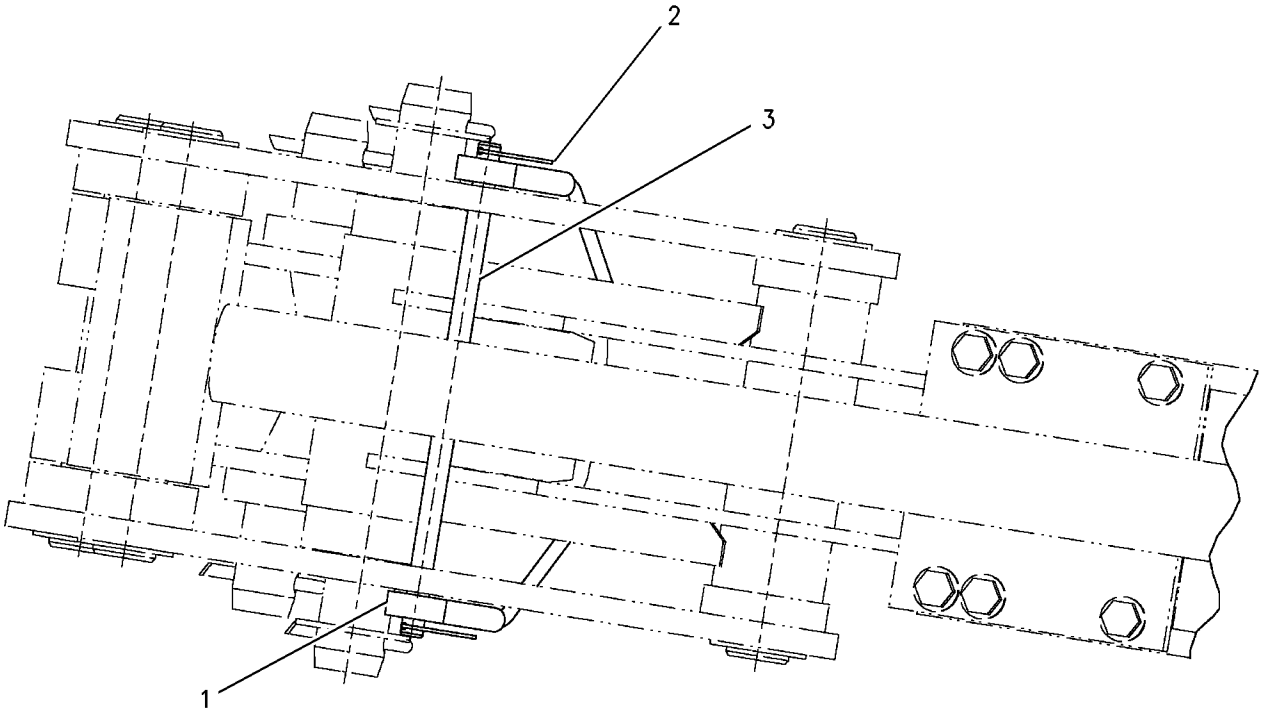


GRAPHIC #1 **<END>** g00778915

# *177-4727* LOCK GP-TRANSPORT—STANDARD STICK

**S/N: BXC1-UP; DSX1-UP**
**HIGH ROTATION BUCKET**
**PART OF 190-2803 CONVERSION AR-CERTIFICATION**
**AN ATTACHMENT**

**SMCS-7505** **i01494471**

| NOTE | REF NO | GRAPHIC REF | PART NUMBER | QTY | PART NAME 1 2 3 4 5 6 (PRODUCT LEVEL) | SEE PAGE |
|---|---|---|---|---|---|---|
| | 1 | 1 | **177-4733** | 1 | CABLE AS | |
| | 2 | 1 | **9R-5301** | 2 | PIN-COTTER | |
| | 3 | 1 | **9R-9028** | 1 | PIN | |

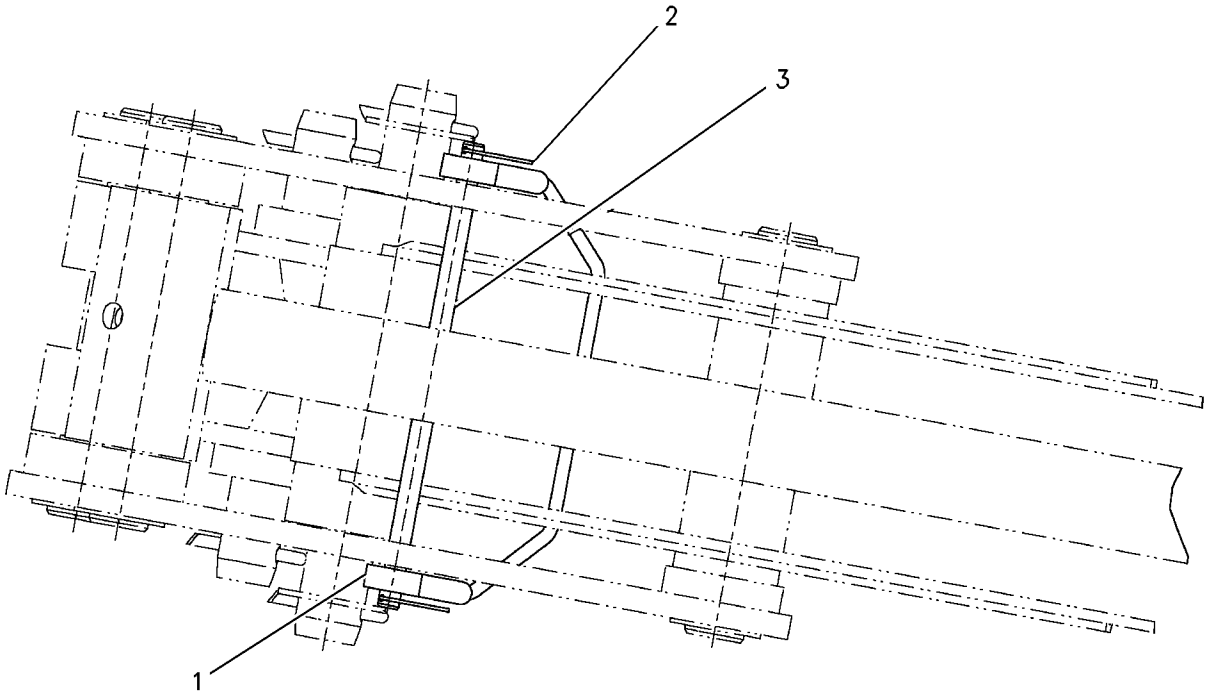


GRAPHIC #1 **<END>** g00778911

# IMPLEMENTS

## *183-6076* LOCK GP-TRANSPORT—STABILIZER

**S/N: BXC1-UP; DSX1-UP**

**PART OF 237-9288, 237-9289 CHASSIS AR**

**SMCS-7505** **i01854784**

| NOTE | REF NO | GRAPHIC REF | PART NUMBER | QTY | PART NAME 1 2 3 4 5 6 (PRODUCT LEVEL) | SEE PAGE |
|---|---|---|---|---|---|---|
| | 1 | 1 | **8D-5294** | 1 | RING | |
| M | 2 | 1 | **108-2989** | 2 | BOLT (M8X1.25X130MM) | |
| | 3 | 1 | **110-5602** | 1 | KNOB | |
| | 4 | 1 | **183-6081** | 1 | BOLT | |
| | 5 | 1 | **183-6084** | 1 | BEARING | |
| | 6 | 1 | **183-6085** | 2 | BEARING | |
| | 7 | 1 | **210-8911** | 1 | BRACKET AS | |
| M | | 1 | **8T-3490** | 1 | NUT-WELD (M10X1.5 THD) | |
| M | | 1 | **8T-3612** | 2 | NUT-WELD (M8X1.25 THD) | |
| | 8 | 1 | **210-8913** | 1 | LEVER AS | |
| | 9 | 1 | **5P-4116** | 2 | WASHER-HARD (8.8X20.5X2MM THK) | |

M-METRIC PART

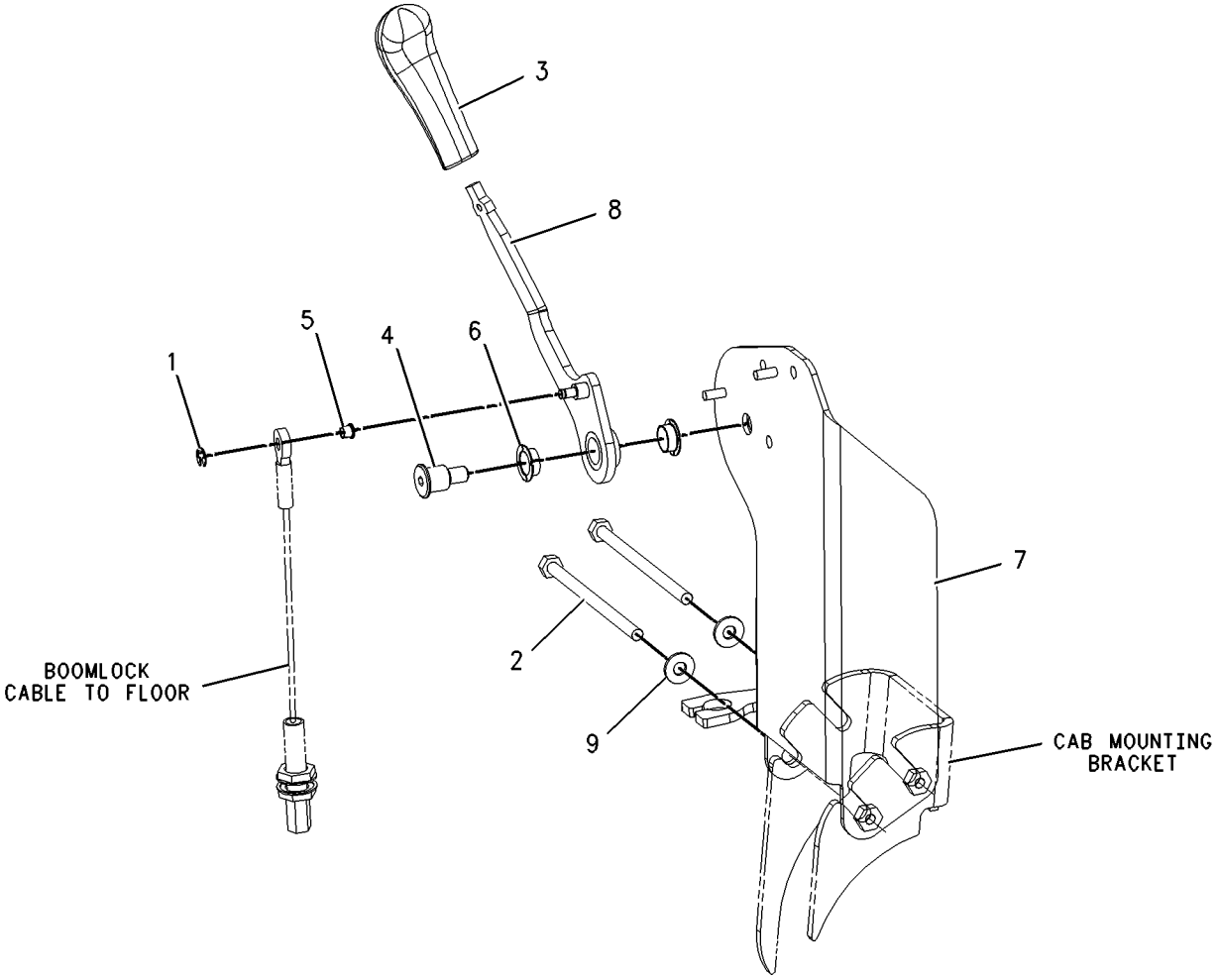


GRAPHIC #1 **<END>** g00949987

# *184-9950* MOUNTING GP-STICK

**S/N: BXC1-UP; DSX1-UP**

**PART OF 240-8490, 240-8491, 240-8492, 240-8493, 240-8504, 240-8505, 240-8506, 240-8507, 240-8689, 240-8690, 240-8691, 240-8692, 240-8699, 240-8700, 240-8701, 240-8702 BACKHOE AR-EXTENDABLE STICK**

**AN ATTACHMENT**

**SMCS-6502** **i01498835**

| NOTE | REF NO | GRAPHIC REF | PART NUMBER | QTY | PART NAME 1 2 3 4 5 6 (PRODUCT LEVEL) | SEE PAGE |
|---|---|---|---|---|---|---|
| B | 1 | 1 | **9R-1502** | 4 | WASHER (4MM THK) | |
| | 2 | 1 | **9R-6163** | 1 | PIN | |
| | 3 | 1 | **184-9956** | 1 | PIN | |
| | 4 | 1 | **2K-3549** | 1 | PIN-SPRING | |
| | 5 | 1 | **3B-8489** | 2 | FITTING-GREASE | |
| M | 6 | 1 | **6V-7687** | 1 | LOCKNUT (M12X1.75 THD) | |
| | 7 | 1 | **6V-8344** | 2 | RING | |
| M | 8 | 1 | **8T-5001** | 1 | BOLT (M12X1.75X130MM) | |
| | 9 | 1 | **159-0961** | 1 | PIN | |
| B | 10 | 1 | **124-0360** | 3 | WASHER-THRUST | |

B-USE AS REQUIRED
M-METRIC PART

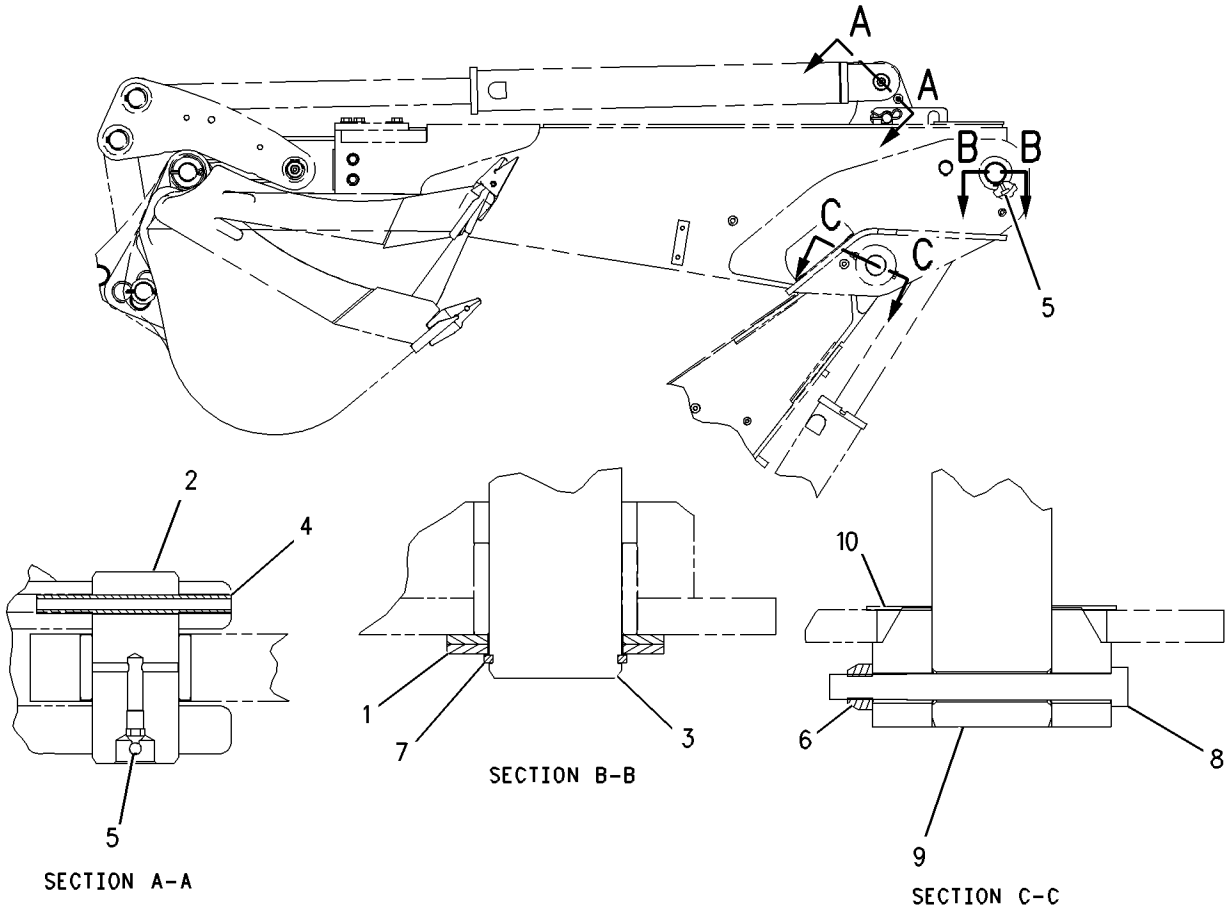


GRAPHIC #1 **<END>** g00777793

# IMPLEMENTS

## *9R-0868* PAD GP-STABILIZER

**S/N: BXC1-UP; DSX1-UP**
**FOR USE WITH 9R-1259 STABILIZER GP-SIDESHIFT**
**AN ATTACHMENT**

**SMCS-7222** **i01238045**

| NOTE | REF NO | GRAPHIC REF | PART NUMBER | QTY | PART NAME 1 2 3 4 5 6 (PRODUCT LEVEL) | SEE PAGE |
|---|---|---|---|---|---|---|
| | 1 | 1 | **166-7870** | 4 | PAD AS-STREET | |
| M | 2 | 1 | **8T-4193** | 12 | BOLT (M16X2.0X50MM) | |
| | 3 | 1 | **9X-8257** | 12 | WASHER (3.50MM THK) | |

M-METRIC PART

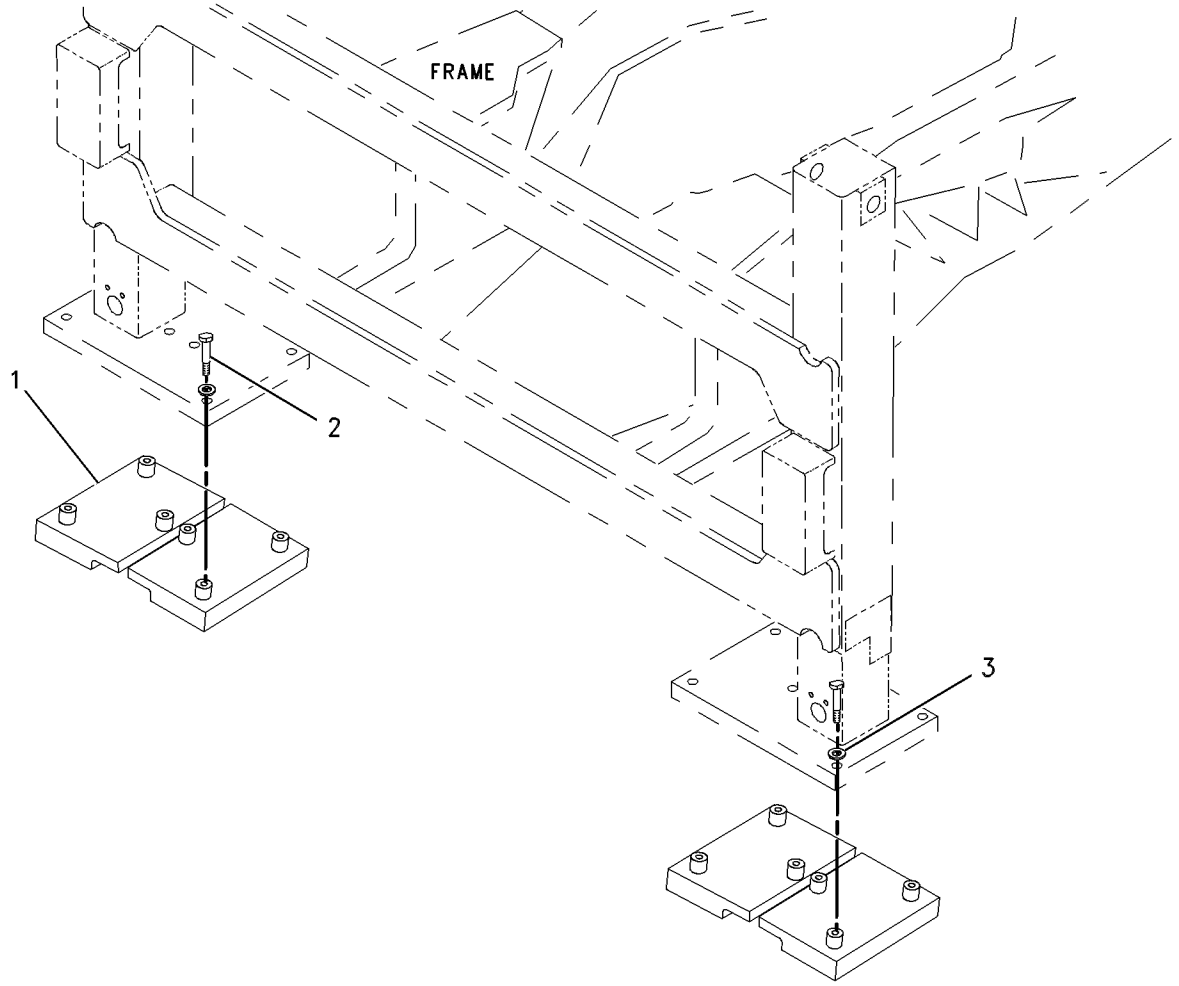


GRAPHIC #1 **<END>** g00661392

# IMPLEMENTS

## *126-5707* STABILIZER GP-BACKHOE

**S/N: BXC1-UP; DSX1-UP**

**PART OF 237-9288, 237-9289 CHASSIS AR**

**SMCS-7222** **i01590104**

| NOTE | REF NO | GRAPHIC REF | PART NUMBER | QTY | PART NAME 1 2 3 4 5 6 (PRODUCT LEVEL) | SEE PAGE |
|---|---|---|---|---|---|---|
| | 1 | 1 | **9R-6785** | 2 | PIN | |
| | 2 | 1 | **136-0437** | 2 | PAD-STABILIZER | |
| | 3 | 1 | **184-1413** | 2 | PIN AS | |
| B | 4 | 1 | **185-5734** | 2 | SHIM | |
| B | 5 | 1 | **185-5735** | 2 | SHIM | |
| | 6 | 1 | **6V-3213** | 6 | RING-RETAINING | |

B-USE AS REQUIRED

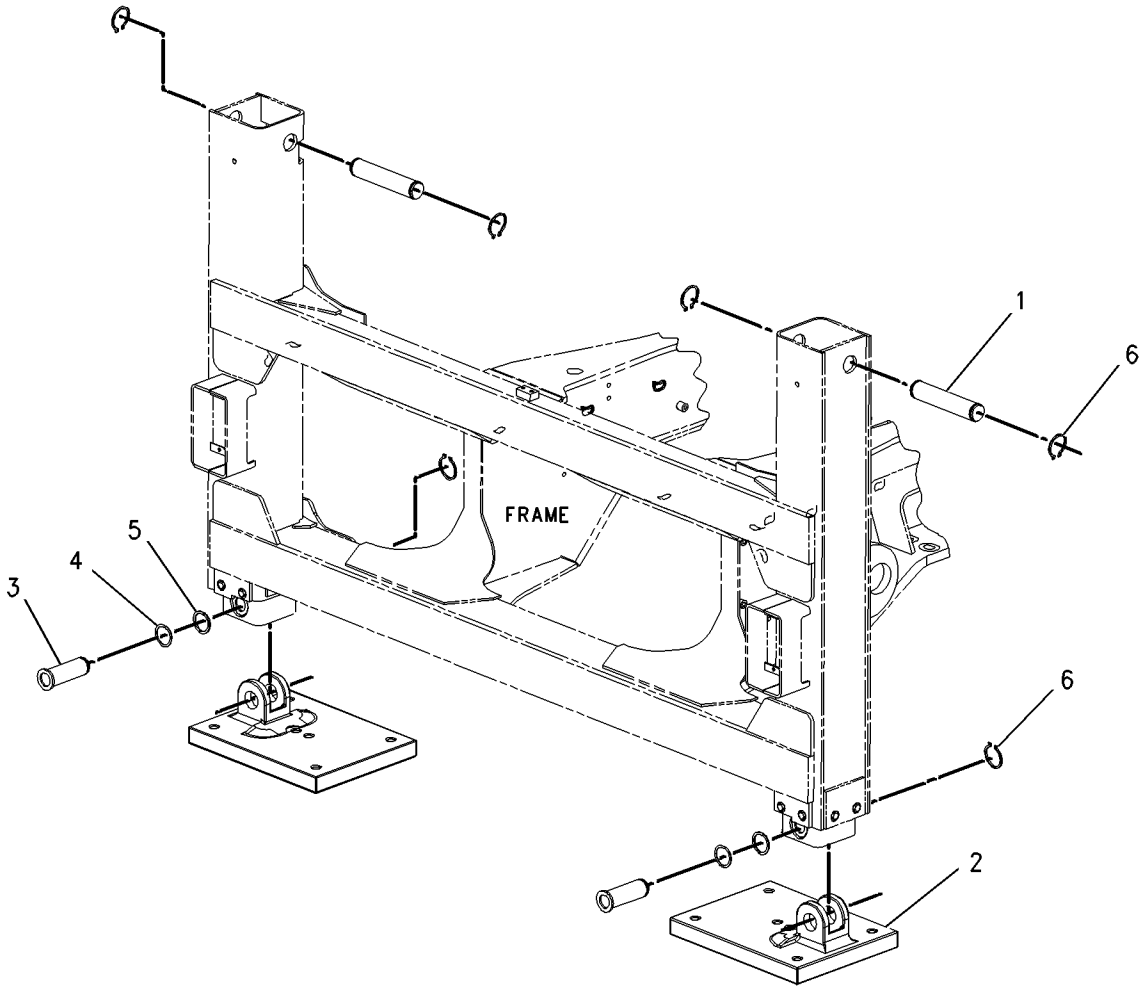


GRAPHIC #1 **<END>** g00824441

# *239-0225* STABILIZER GP-BACKHOE—STANDARD LEG

**S/N: BXC1-UP; DSX1-UP**

**AN ATTACHMENT**

**SMCS-7222** **i01946191**

| NOTE | REF NO | GRAPHIC REF | PART NUMBER | QTY | PART NAME 1 2 3 4 5 6 (PRODUCT LEVEL) | SEE PAGE |
|---|---|---|---|---|---|---|
| | 1 | 1 | **126-5693** | 2 | TUBE AS | |

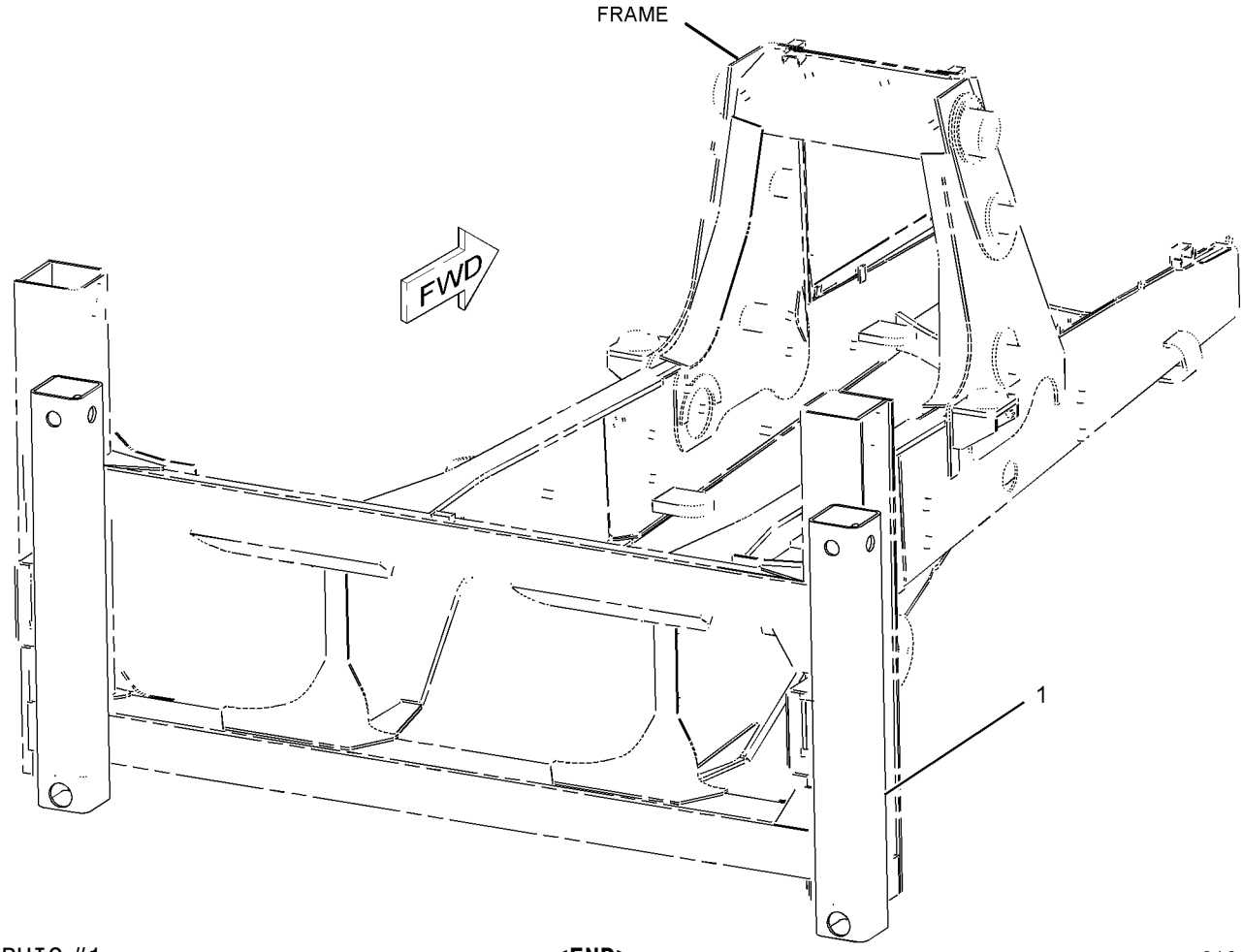


GRAPHIC #1 **<END>** g01013113

# IMPLEMENTS

## *239-0226* STABILIZER GP-BACKHOE—SLOTTED LEG

**S/N: BXC1-UP; DSX1-UP**

**AN ATTACHMENT**

**SMCS-7222** **i01946195**

| NOTE | REF NO | GRAPHIC REF | PART NUMBER | QTY | PART NAME 1 2 3 4 5 6 (PRODUCT LEVEL) | SEE PAGE |
|---|---|---|---|---|---|---|
| | 1 | 1 | **215-5643** | 2 | TUBE AS | |

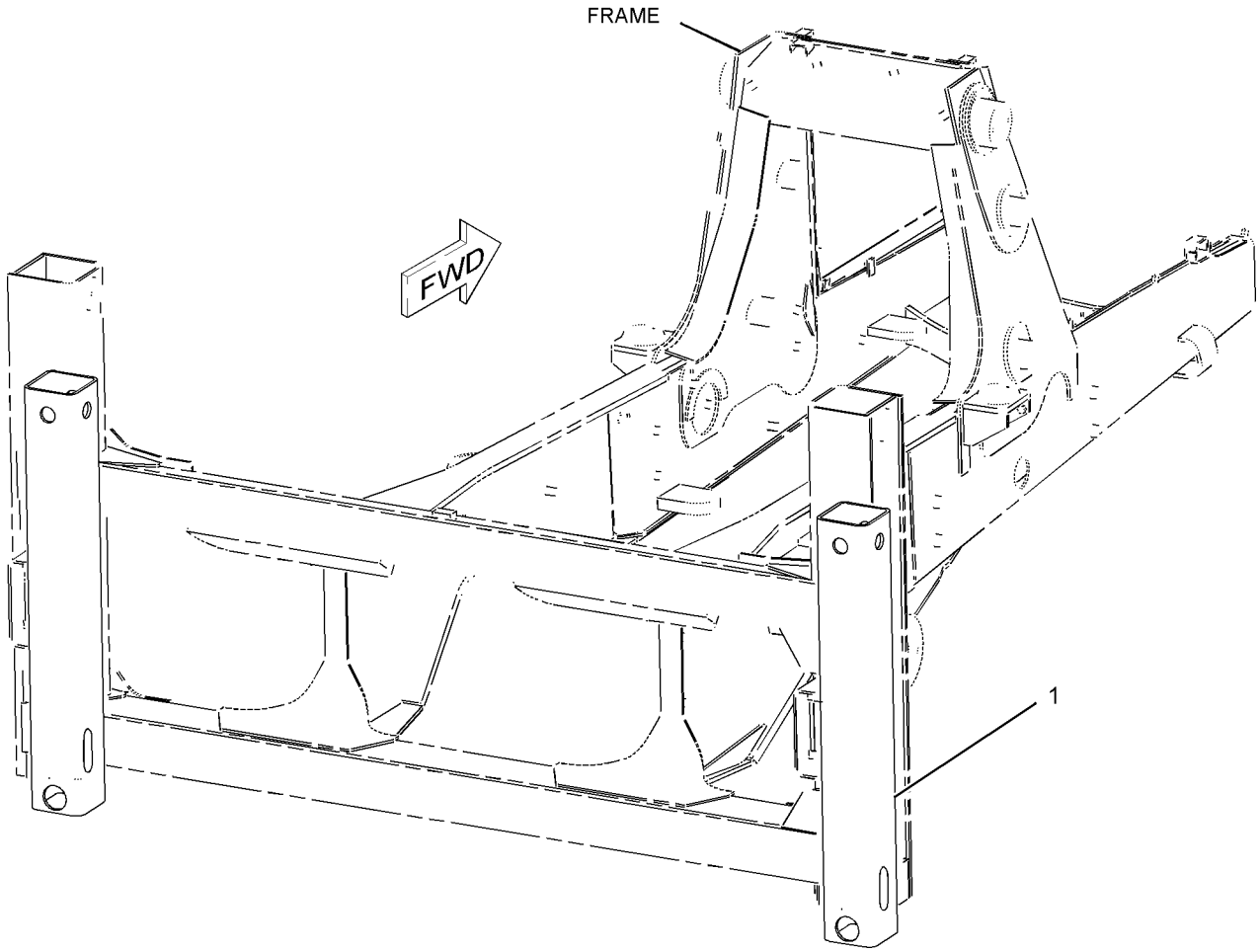


GRAPHIC #1 **<END>** g01013121

# *184-6786* STICK GP-EXTENDABLE

**S/N: BXC1-UP; DSX1-UP**

**PART OF 240-8689, 240-8690, 240-8691, 240-8692, 240-8699, 240-8700, 240-8701, 240-8702 BACKHOE AR-EXTENDABLE STICK**

**AN ATTACHMENT**

**SMCS-6533** **i01843847**

| NOTE | REF NO | GRAPHIC REF | PART NUMBER | QTY | PART NAME 1 2 3 4 5 6 (PRODUCT LEVEL) | SEE PAGE |
|---|---|---|---|---|---|---|
| | 1 | 1 | **9R-2958** | 1 | PIN | |
| | 2 | 1 | **9R-2959** | 2 | CLIP | |
| B | 3 | 1 | **117-0754** | 4 | SHIM (1MM THK) | |
| Y | 4 | 1 | *155-6586* | 1 | CYLINDER GP-EXTENDABLE STICK | 378 |
| B | 5 | 1 | **157-3364** | 6 | SHIM (1MM THK) | |
| B | 6 | 1 | **157-3365** | 12 | SHIM (1MM THK) | |
| B | 7 | 1 | **157-3366** | 4 | SHIM (0.5MM THK) | |
| B | 8 | 1 | **157-3367** | 4 | SHIM (0.5MM THK) | |
| | 9 | 1 | **173-2769** | 1 | PIN | |
| | 10 | 1 | **173-7758** | 1 | PIN | |
| B | 11 | 1 | **183-3757** | 3 | SHIM (1MM THK) | |
| B | 12 | 1 | **183-3758** | 2 | SHIM (0.5MM THK) | |
| Y | 13 | 1 | **184-6784** | 1 | HOUSING AS-EXTENDABLE STICK | 592 |
| | 14 | 1 | **184-6785** | 1 | EXTENSION AS | |
| | 14A | 1 | **9R-0162** | 2 | BEARING | |
| | 14B | 1 | **9R-0411** | 3 | BEARING-SLEEVE | |
| | 15 | 1 | **187-3825** | 1 | PAD AS | |
| | 16 | 1 | **187-3826** | 4 | PAD AS | |
| | 17 | 1 | **187-3827** | 2 | PAD AS | |
| | 18 | 1 | **187-3828** | 1 | PAD AS | |
| B | 19 | 1 | **187-3830** | 3 | SHIM (1MM THK) | |
| B | 20 | 1 | **187-3831** | 2 | SHIM (0.5MM THK) | |
| | 21 | 1 | **187-4052** | 1 | PLATE | |
| | 22 | 1 | **1J-6474** | 2 | RING-RETAINING | |
| | 23 | 1 | **1L-3768** | 2 | RING-RETAINING | |
| | 24 | 1 | **3B-8489** | 1 | FITTING-GREASE (1/8-27 THD) | |
| | 25 | 1 | **8T-4122** | 6 | WASHER-HARD (17X32X3.5MM THK) | |
| M | 26 | 1 | **8T-4179** | 4 | BOLT (M12X1.75X20MM) | |
| M | 27 | 1 | **8T-4184** | 2 | BOLT (M12X1.75X45MM) | |
| M | 28 | 1 | **8T-4192** | 10 | BOLT (M12X1.75X25MM) | |
| | 29 | 1 | **8T-4223** | 6 | WASHER-HARD (13.5X25.5X3MM THK) | |
| M | 30 | 1 | **8T-7338** | 6 | BOLT (M16X2.0X45MM) | |
| | 31 | 1 | **8T-7971** | 8 | WASHER-HARD (13.5X25.5X5MM THK) | |

B-USE AS REQUIRED
M-METRIC PART
Y-SEPARATE ILLUSTRATION

*184-6786* **STICK GP-EXTENDABLE** *(contd. )* **i01843847**

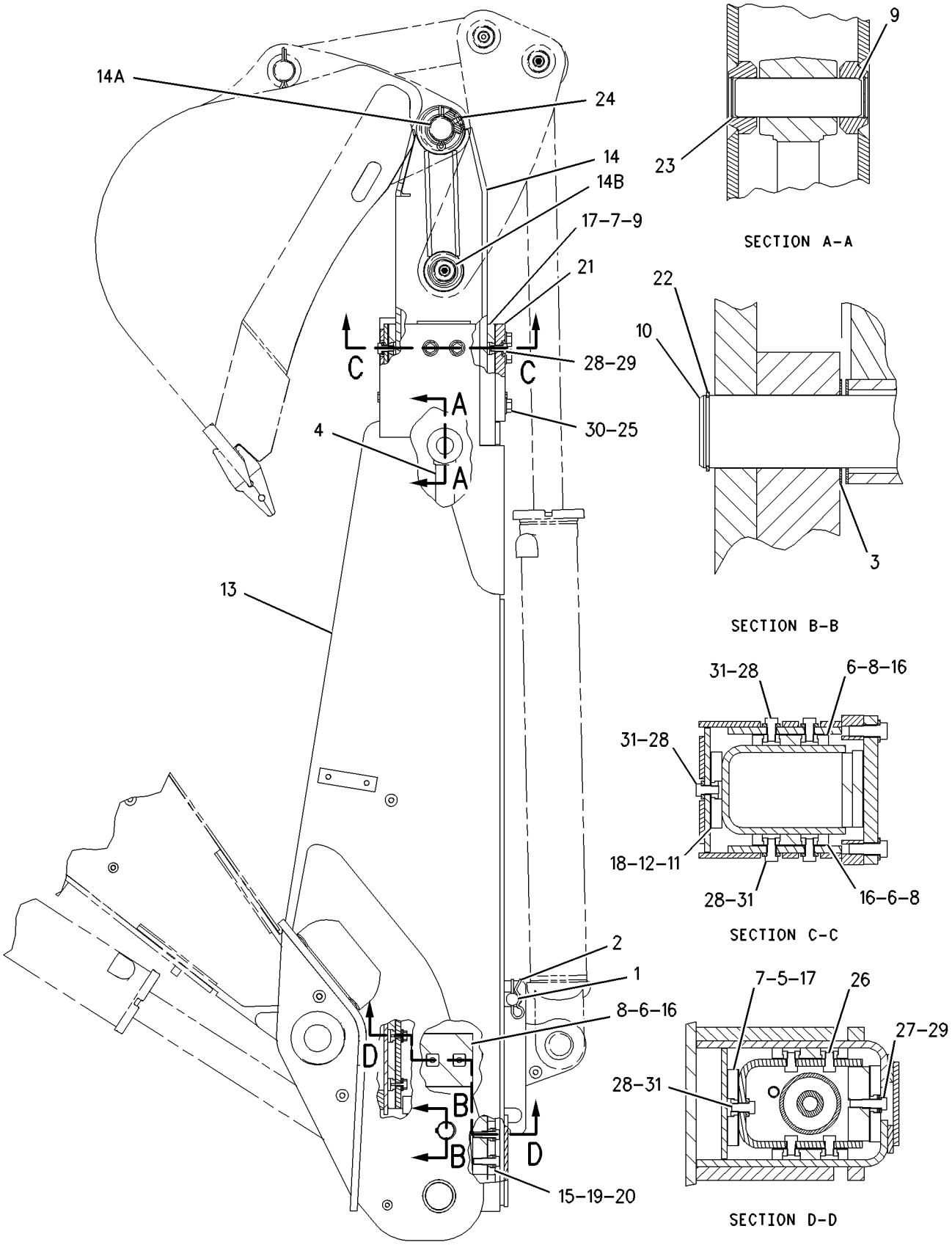


GRAPHIC #1 **<END>** g00782864

# *184-9754* STICK GP-EXTENDABLE

**S/N: BXC1-UP; DSX1-UP**

**PART OF 240-8490, 240-8491, 240-8492, 240-8493, 240-8504, 240-8505, 240-8506, 240-8507 BACKHOE AR-EXTENDABLE STICK**

**AN ATTACHMENT**

**SMCS-6533** **i01843856**

| NOTE | REF NO | GRAPHIC REF | PART NUMBER | QTY | PART NAME 1 2 3 4 5 6 (PRODUCT LEVEL) | SEE PAGE |
|---|---|---|---|---|---|---|
| | 1 | 1 | **9R-2958** | 1 | PIN | |
| | 2 | 1 | **9R-2959** | 2 | CLIP | |
| B | 3 | 1 | **117-0754** | 4 | SHIM (1MM THK) | |
| Y | 4 | 1 | *155-6586* | 1 | CYLINDER GP-EXTENDABLE STICK | 378 |
| B | 5 | 1 | **187-3834** | 6 | SHIM (1MM THK) | |
| B | 6 | 1 | **187-3832** | 12 | SHIM (1MM THK) | |
| B | 7 | 1 | **187-3835** | 4 | SHIM (0.5MM THK) | |
| B | 8 | 1 | **187-3833** | 4 | SHIM (0.5MM THK) | |
| | 9 | 1 | **173-2769** | 1 | PIN | |
| | 10 | 1 | **173-7758** | 1 | PIN | |
| B | 11 | 1 | **187-3836** | 3 | SHIM (1MM THK) | |
| B | 12 | 1 | **187-3837** | 2 | SHIM (0.5MM THK) | |
| Y | 13 | 1 | **184-6784** | 1 | HOUSING AS-EXTENDABLE STICK | 592 |
| | 14 | 1 | **184-9992** | 1 | EXTENSION AS | |
| | 14A | 1 | **9R-7891** | 2 | BEARING-SLEEVE | |
| | 14B | 1 | **9R-0411** | 3 | BEARING-SLEEVE | |
| | | 1 | **9R-9254** | 2 | BOSS | |
| | 15 | 1 | **187-3825** | 1 | PAD AS | |
| | 16 | 1 | **187-3826** | 4 | PAD AS | |
| | 17 | 1 | **187-3827** | 2 | PAD AS | |
| | 18 | 1 | **187-3828** | 1 | PAD AS | |
| B | 19 | 1 | **198-0014** | 3 | SHIM (1MM THK) | |
| B | 20 | 1 | **198-0015** | 2 | SHIM (0.5MM THK) | |
| | 21 | 1 | **187-4052** | 1 | PLATE | |
| | 22 | 1 | **1J-6474** | 2 | RING-RETAINING | |
| | 23 | 1 | **1L-3768** | 2 | RING-RETAINING | |
| | 24 | 1 | **3B-8489** | 1 | FITTING-GREASE (1/8-27 THD) | |
| | 25 | 1 | **8T-4122** | 6 | WASHER-HARD (17X32X3.5MM THK) | |
| M | 26 | 1 | **8T-4179** | 4 | BOLT (M12X1.75X20MM) | |
| M | 27 | 1 | **8T-4184** | 2 | BOLT (M12X1.75X45MM) | |
| M | 28 | 1 | **8T-4192** | 10 | BOLT (M12X1.75X25MM) | |
| | 29 | 1 | **8T-4223** | 6 | WASHER-HARD (13.5X25.5X3MM THK) | |
| M | 30 | 1 | **8T-7338** | 6 | BOLT (M16X2.0X45MM) | |
| | 31 | 1 | **8T-7971** | 8 | WASHER-HARD (13.5X25.5X5MM THK) | |

B-USE AS REQUIRED
M-METRIC PART
Y-SEPARATE ILLUSTRATION

*184-9754* **STICK GP-EXTENDABLE** *(contd.)* **i01843856**

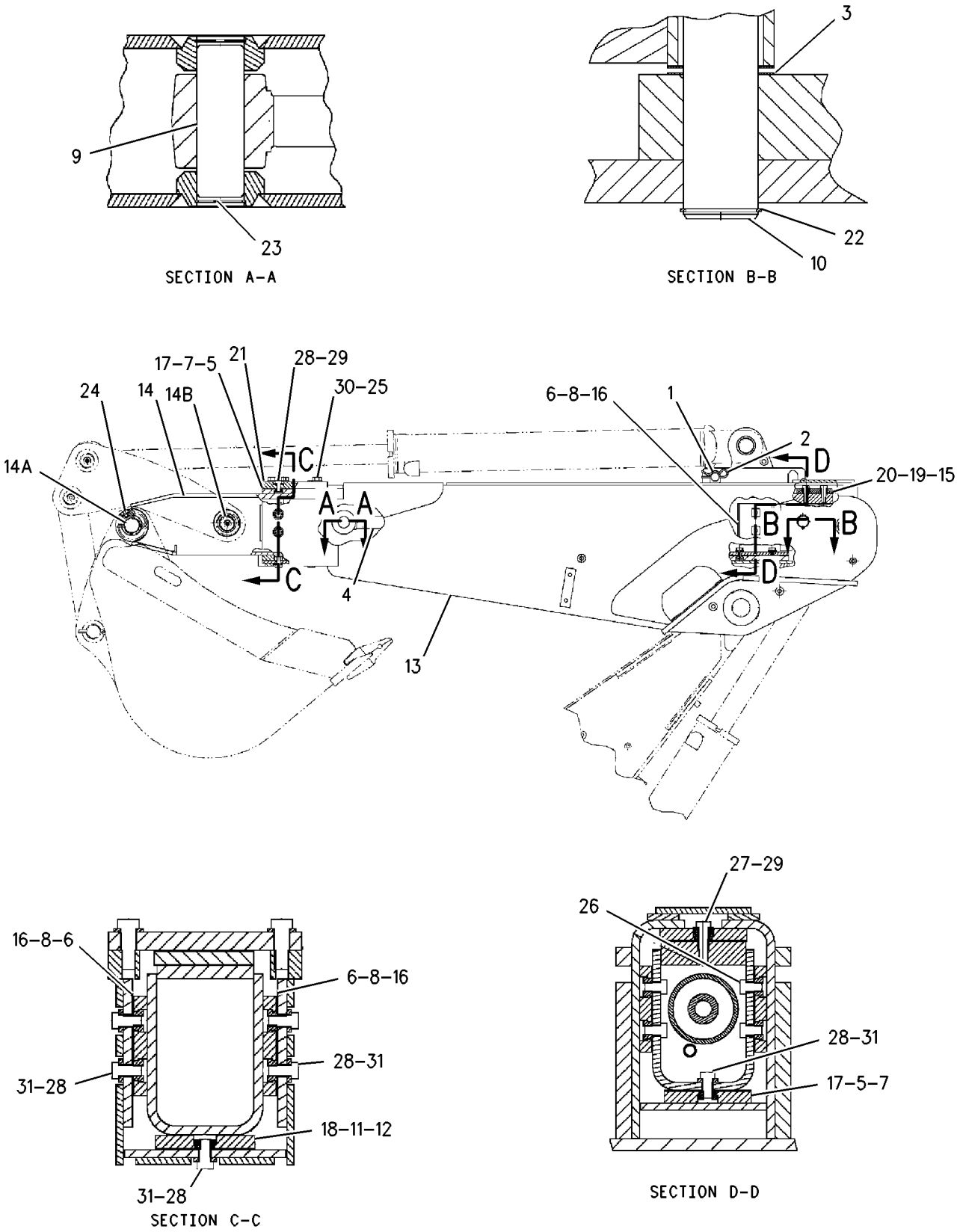


GRAPHIC #1 **<END>** g00788133

# *184-6178* STICK GP-HOE

**S/N: BXC1-UP; DSX1-UP**

**PART OF 240-8683, 240-8684, 240-8685, 240-8686, 240-8687, 240-8688, 240-8693, 240-8694, 240-8695, 240-8696, 240-8697, 240-8698 BACKHOE AR-STANDARD STICK AN ATTACHMENT**

**SMCS-6502** **i01671172**

| NOTE | REF NO | GRAPHIC REF | PART NUMBER | QTY | PART NAME 1 2 3 4 5 6 (PRODUCT LEVEL) | SEE PAGE |
|---|---|---|---|---|---|---|
| | 1 | 1 | **3B-8488** | 1 | FITTING-GREASE (1/8-27 THD) | |
| B | 2 | 1 | **9R-1502** | 4 | WASHER (4MM THK) | |
| B | 3 | 1 | **9R-1510** | 4 | WASHER (4MM THK) | |
| | 4 | 1 | **9R-8663** | 1 | PIN | |
| B | 5 | 1 | **124-0360** | 3 | WASHER-THRUST | |
| | 6 | 1 | **179-9961** | 1 | PLUG-PROTECTIVE | |
| | 7 | 1 | **184-1307** | 1 | STICK AS | |
| | 7A | 1 | **9R-0139** | 2 | BEARING-SLEEVE | |
| | 7B | 1 | **9R-0162** | 4 | BEARING | |
| | 7C | 1 | **9R-0411** | 2 | BEARING-SLEEVE | |
| | 7D | 1 | **107-6711** | 2 | BLOCK | |
| | 7E | 1 | **172-9992** | 2 | BOSS | |
| | 8 | 1 | **174-5696** | 1 | PIN | |
| | 9 | 1 | **3B-8489** | 2 | FITTING-GREASE (1/8-27 THD) | |
| | 10 | 1 | **6V-4364** | 2 | RING-RETAINING | |
| M | 11 | 1 | **6V-7687** | 1 | LOCKNUT (M12X1.75 THD) | |
| | 12 | 1 | **6V-8344** | 2 | RING | |
| M | 13 | 1 | **8T-5001** | 1 | BOLT (M12X1.75X130MM) | |
| | 14 | 1 | **159-0961** | 1 | PIN | |

B-USE AS REQUIRED
M-METRIC PART

*184-6178* **STICK GP-HOE** *(contd.)* **i01671172**

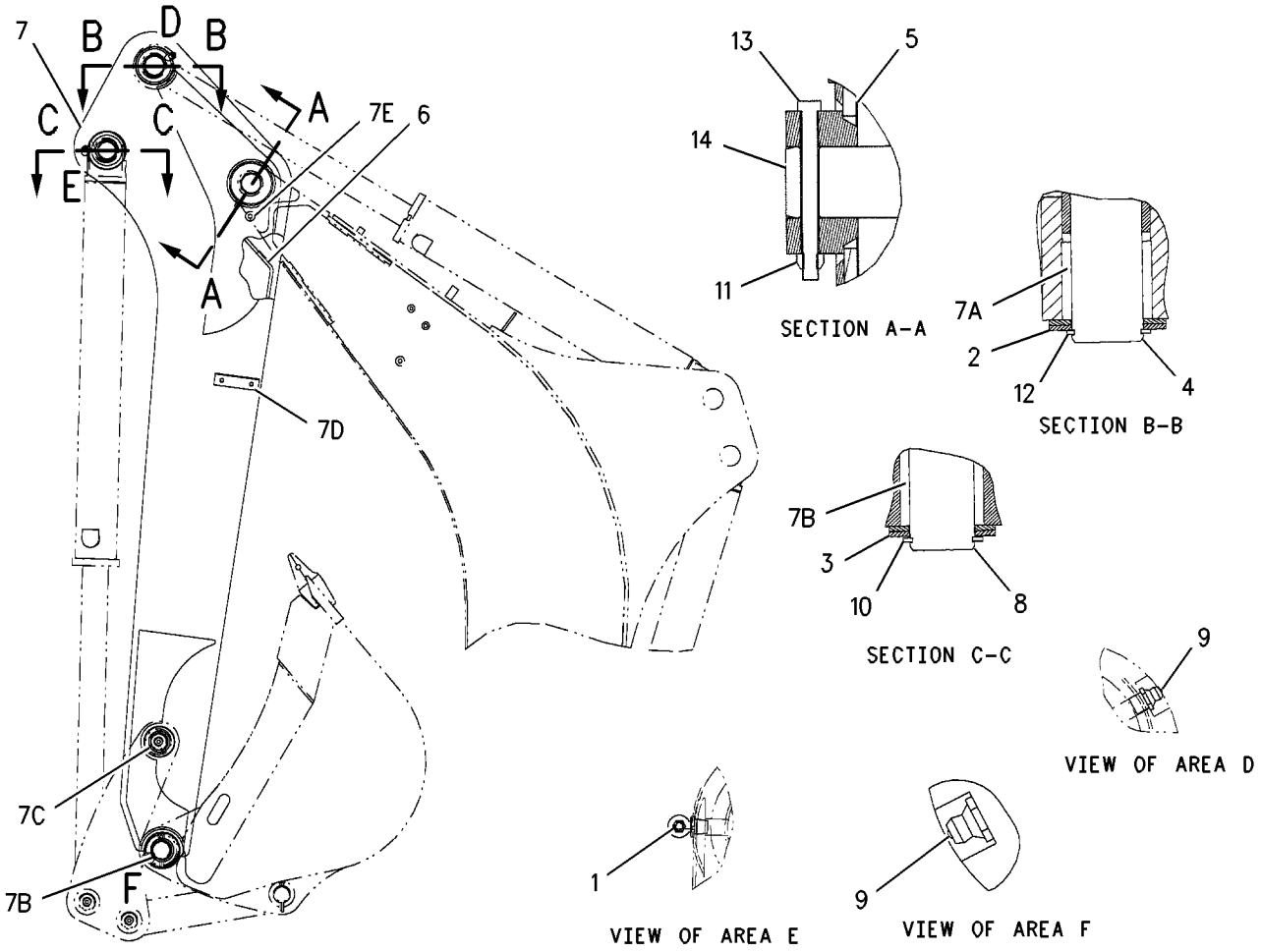


GRAPHIC #1 **<END>** g00863585

# WORK TOOLS

## 111-8634 BUCKET AR-MULTIPURPOSE

**S/N: BXC1-UP; DSX1-UP**
**1.03 CU M (1.35 CU YD)**
**PART OF 111-8636 BUCKET AR-MULTIPURPOSE**
**AN ATTACHMENT**

**SMCS-6104** **i01422432**

| NOTE | PART NUMBER | QTY | PART NAME 1 2 3 4 5 6 (PRODUCT LEVEL) | SEE PAGE |
|---|---|---|---|---|
| Y | **104-3965** | 1 | BUCKET GP-MULTIPURPOSE | 667 |
| Y | **185-1839** | 2 | CYLINDER GP-MULTIPURPOSE BUKT | 382 |
| Y | *9R-5788* | 1 | LINES GP-MULTIPURPOSE BUCKET | 468 |
| Y | *9R-4668* | 1 | MOUNTING GP-CYLINDER | 527 |

Y-SEPARATE ILLUSTRATION

**<END>**

## 111-8635 BUCKET AR-MULTIPURPOSE

**S/N: BXC1-UP; DSX1-UP**
**1.03 CU M (1.35 CU YD). WITH FORKS**
**PART OF 111-8637 BUCKET AR-MULTIPURPOSE**
**AN ATTACHMENT**

**SMCS-6104** **i01422960**

| NOTE | PART NUMBER | QTY | PART NAME 1 2 3 4 5 6 (PRODUCT LEVEL) | SEE PAGE |
|---|---|---|---|---|
| Y | **104-3964** | 1 | BUCKET GP-MULTIPURPOSE | 666 |
| Y | **185-1839** | 2 | CYLINDER GP-MULTIPURPOSE BUKT | 382 |
| Y | *104-6310* | 1 | FORK GP | 686 |
| Y | *9R-5788* | 1 | LINES GP-MULTIPURPOSE BUCKET | 468 |
| Y | *9R-4668* | 1 | MOUNTING GP-CYLINDER | 527 |

Y-SEPARATE ILLUSTRATION

**<END>**

## *111-8636* BUCKET AR-MULTIPURPOSE

**S/N: BXC1-UP; DSX1-UP**
**1.03 CU M (1.35 CU YD)**
**AN ATTACHMENT**

**SMCS-6104** **i01975040**

| NOTE | PART NUMBER | QTY | PART NAME 1 2 3 4 5 6 (PRODUCT LEVEL) | SEE PAGE |
|---|---|---|---|---|
| Y | **111-8634** | 1 | BUCKET AR-MULTIPURPOSE | 615 |
| | **106-9387** | 1 | FILM-INDICATOR (BUCKET LEVEL) (BUCKET) | |

Y-SEPARATE ILLUSTRATION

**<END>**

## *111-8637* BUCKET AR-MULTIPURPOSE

**S/N: BXC1-UP; DSX1-UP**
**1.03 CU M (1.35 CU YD). WITH FORKS**
**AN ATTACHMENT**

**SMCS-6104** **i01658032**

| NOTE | PART NUMBER | QTY | PART NAME 1 2 3 4 5 6 (PRODUCT LEVEL) | SEE PAGE |
|---|---|---|---|---|
| Y | **111-8635** | 1 | BUCKET AR-MULTIPURPOSE | 615 |
| | **106-9387** | 1 | FILM-INDICATOR (BUCKET) | |

Y-SEPARATE ILLUSTRATION

**<END>**

## 112-0938 BUCKET AR-MULTIPURPOSE

**S/N: BXC1-UP; DSX1-UP**
**0.95 CU M (1.25 CU YD)**
**PART OF 112-0940 BUCKET AR-MULTIPURPOSE**
**AN ATTACHMENT**

**SMCS-6104** **i01422429**

| NOTE | PART NUMBER | QTY | PART NAME 1 2 3 4 5 6 (PRODUCT LEVEL) | SEE PAGE |
|---|---|---|---|---|
| Y | **108-3036** | 1 | BUCKET GP-MULTIPURPOSE | 668 |
| Y | **185-1839** | 2 | CYLINDER GP-MULTIPURPOSE BUKT | 382 |
| Y | *9R-3712* | 1 | LINES GP-MULTIPURPOSE BUCKET | 466 |
| Y | *9R-4668* | 1 | MOUNTING GP-CYLINDER | 527 |

Y-SEPARATE ILLUSTRATION

**<END>**

## 112-0939 BUCKET AR-MULTIPURPOSE

**S/N: BXC1-UP; DSX1-UP**
**0.65 CU M (0.85 CU YD). WITH FORKS**
**PART OF 112-0941 BUCKET AR-MULTIPURPOSE**
**AN ATTACHMENT**

**SMCS-6104** **i01448675**

| NOTE | PART NUMBER | QTY | PART NAME 1 2 3 4 5 6 (PRODUCT LEVEL) | SEE PAGE |
|---|---|---|---|---|
| Y | **185-1839** | 2 | CYLINDER GP-MULTIPURPOSE BUKT | 382 |
| Y | **112-1778** | 1 | BUCKET GP-MULTIPURPOSE | 669 |
| Y | *104-6310* | 1 | FORK GP | 686 |
| Y | *9R-3712* | 1 | LINES GP-MULTIPURPOSE BUCKET | 466 |
| Y | *9R-4668* | 1 | MOUNTING GP-CYLINDER | 527 |

Y-SEPARATE ILLUSTRATION

**<END>**

# WORK TOOLS

## *112-0940* BUCKET AR-MULTIPURPOSE

**S/N: BXC1-UP; DSX1-UP**
**0.95 CU M (1.25 CU YD)**
**AN ATTACHMENT**

**SMCS-6104** **i01658067**

| NOTE | PART NUMBER | QTY | PART NAME 1 2 3 4 5 6 (PRODUCT LEVEL) | SEE PAGE |
|---|---|---|---|---|
| Y | **112-0938** | 1 | BUCKET AR-MULTIPURPOSE | 616 |
| | **106-9387** | 1 | FILM-INDICATOR (BUCKET) | |
| Y-SEPARATE ILLUSTRATION | | | | |

**<END>**

## *112-0941* BUCKET AR-MULTIPURPOSE

**S/N: BXC1-UP; DSX1-UP**
**0.95 CU M (1.25 CU YD). WITH FORKS**
**AN ATTACHMENT**

**SMCS-6104** **i01658068**

| NOTE | PART NUMBER | QTY | PART NAME 1 2 3 4 5 6 (PRODUCT LEVEL) | SEE PAGE |
|---|---|---|---|---|
| Y | **112-0939** | 1 | BUCKET AR-MULTIPURPOSE | 616 |
| | **106-9387** | 1 | FILM-INDICATOR (BUCKET) | |
| Y-SEPARATE ILLUSTRATION | | | | |

**<END>**

## *112-1920* BUCKET AR-MULTIPURPOSE

**S/N: BXC1-UP; DSX1-UP**
**1.01 CU M (1.25 CU YD). WITH FORKS**
**AN ATTACHMENT**

**SMCS-6104** **i00817769**

| NOTE | PART NUMBER | QTY | PART NAME 1 2 3 4 5 6 (PRODUCT LEVEL) | SEE PAGE |
|---|---|---|---|---|
| Y | *124-0487* | 1 | BUCKET AR-MULTIPURPOSE | 619 |
| | **106-9387** | 1 | FILM-INDICATOR | |
| Y-SEPARATE ILLUSTRATION | | | | |

**<END>**

## *112-1937* BUCKET AR-MULTIPURPOSE

**S/N: BXC1-UP; DSX1-UP**
**1.01 CU M (1.25 CU YD). WITHOUT FORKS**
**AN ATTACHMENT**

**SMCS-6104** **i00817770**

| NOTE | PART NUMBER | QTY | PART NAME 1 2 3 4 5 6 (PRODUCT LEVEL) | SEE PAGE |
|---|---|---|---|---|
| Y | *124-0488* | 1 | BUCKET AR-MULTIPURPOSE | 619 |
| | **106-9387** | 1 | FILM-INDICATOR | |
| Y-SEPARATE ILLUSTRATION | | | | |

**<END>**

# WORK TOOLS

## *112-1940* BUCKET AR-MULTIPURPOSE

**S/N: BXC1-UP; DSX1-UP**
**1.03 CU M (1.35 CU YD). WITHOUT FORKS**
**AN ATTACHMENT**

**SMCS-6104** **i00796712**

| NOTE | PART NUMBER | QTY | PART NAME 1 2 3 4 5 6 (PRODUCT LEVEL) | SEE PAGE |
|---|---|---|---|---|
| Y | *124-0486* | 1 | BUCKET AR-MULTIPURPOSE | 618 |
| | **106-9387** | 1 | FILM-INDICATOR | |

Y-SEPARATE ILLUSTRATION

**<END>**

## *112-1941* BUCKET AR-MULTIPURPOSE

**S/N: BXC1-UP; DSX1-UP**
**1.03 CU M (1.35 CU YD). WITH FORKS**
**AN ATTACHMENT**

**SMCS-6104** **i00796717**

| NOTE | PART NUMBER | QTY | PART NAME 1 2 3 4 5 6 (PRODUCT LEVEL) | SEE PAGE |
|---|---|---|---|---|
| Y | *124-0489* | 1 | BUCKET AR-MULTIPURPOSE | 619 |
| | **106-9387** | 1 | FILM-INDICATOR | |

Y-SEPARATE ILLUSTRATION

**<END>**

## *124-0486* BUCKET AR-MULTIPURPOSE

**S/N: BXC1-UP; DSX1-UP**
**1.03 CU M (1.35 CU YD). WITHOUT FORKS**
**PART OF 112-1940 BUCKET AR-MULTIPURPOSE**
**AN ATTACHMENT**

**SMCS-6104** **i01422974**

| NOTE | PART NUMBER | QTY | PART NAME 1 2 3 4 5 6 (PRODUCT LEVEL) | SEE PAGE |
|---|---|---|---|---|
| Y | *112-1924* | 1 | BUCKET GP-MULTIPURPOSE | 674 |
| Y | **185-1839** | 2 | CYLINDER GP-MULTIPURPOSE BUKT | 382 |
| Y | *119-4112* | 1 | LINES GP-MULTIPURPOSE BUCKET | 472 |
| Y | *9R-4668* | 1 | MOUNTING GP-CYLINDER | 527 |

Y-SEPARATE ILLUSTRATION

**<END>**

## *124-0487* BUCKET AR-MULTIPURPOSE

**S/N: BXC1-UP; DSX1-UP**
**0.65 CU M (1.25 CU YD). WITH FORKS**
**PART OF 112-1920 BUCKET AR-MULTIPURPOSE**
**AN ATTACHMENT**

**SMCS-6104** **i01422991**

| NOTE | PART NUMBER | QTY | PART NAME 1 2 3 4 5 6 (PRODUCT LEVEL) | SEE PAGE |
|---|---|---|---|---|
| Y | *112-1922* | 1 | BUCKET GP-MULTIPURPOSE | 672 |
| Y | **185-1839** | 2 | CYLINDER GP-MULTIPURPOSE BUKT | 382 |
| Y | *104-6310* | 1 | FORK GP | 686 |
| Y | *118-4930* | 1 | LINES GP-MULTIPURPOSE BUCKET | 470 |
| Y | *9R-4668* | 1 | MOUNTING GP-CYLINDER | 527 |

Y-SEPARATE ILLUSTRATION

**<END>**

## *124-0488* BUCKET AR-MULTIPURPOSE

**S/N: BXC1-UP; DSX1-UP**
**0.65 CU M (1.25 CU YD). WITHOUT FORKS**
**PART OF 112-1937 BUCKET AR-MULTIPURPOSE**
**AN ATTACHMENT**

**SMCS-6104** **i01422998**

| NOTE | PART NUMBER | QTY | PART NAME 1 2 3 4 5 6 (PRODUCT LEVEL) | SEE PAGE |
|---|---|---|---|---|
| Y | *112-1918* | 1 | BUCKET GP-MULTIPURPOSE | 670 |
| Y | **185-1839** | 2 | CYLINDER GP-MULTIPURPOSE BUKT | 382 |
| Y | *118-4930* | 1 | LINES GP-MULTIPURPOSE BUCKET | 470 |
| Y | *9R-4668* | 1 | MOUNTING GP-CYLINDER | 527 |

Y-SEPARATE ILLUSTRATION

**<END>**

## *124-0489* BUCKET AR-MULTIPURPOSE

**S/N: BXC1-UP; DSX1-UP**
**1.03 CU M (1.35 CU YD). WITH FORKS**
**PART OF 112-1941 BUCKET AR-MULTIPURPOSE**
**AN ATTACHMENT**

**SMCS-6104** **i01446537**

| NOTE | PART NUMBER | QTY | PART NAME 1 2 3 4 5 6 (PRODUCT LEVEL) | SEE PAGE |
|---|---|---|---|---|
| Y | **185-1839** | 2 | CYLINDER GP-MULTIPURPOSE BUKT | 382 |
| Y | *112-1926* | 1 | BUCKET GP-MULTIPURPOSE | 675 |
| Y | *104-6310* | 1 | FORK GP | 686 |
| Y | *119-4112* | 1 | LINES GP-MULTIPURPOSE BUCKET | 472 |
| Y | *9R-4668* | 1 | MOUNTING GP-CYLINDER | 527 |

Y-SEPARATE ILLUSTRATION

**<END>**

## *164-4659* BUCKET AR-MULTIPURPOSE

**S/N: BXC1-UP; DSX1-UP**
**1.03 CU M(1.35 CU YD). WITHOUT FORKS**
**AN ATTACHMENT**

**SMCS-6104** **i01573481**

| NOTE | PART NUMBER | QTY | PART NAME 1 2 3 4 5 6 (PRODUCT LEVEL) | SEE PAGE |
|---|---|---|---|---|
| Y | *112-1926* | 1 | BUCKET GP-MULTIPURPOSE | 675 |
| Y | **185-1839** | 2 | CYLINDER GP-MULTIPURPOSE BUKT | 382 |
| Y | *119-4112* | 1 | LINES GP-MULTIPURPOSE BUCKET | 472 |
| Y | *9R-4668* | 1 | MOUNTING GP-CYLINDER | 527 |
| | **106-9387** | 1 | FILM-INDICATOR | |

Y-SEPARATE ILLUSTRATION

**<END>**

## 208-0827 BUCKET AR-MULTIPURPOSE

**S/N: BXC1-UP; DSX1-UP**
**0.95 CU M(1.25 CU YD)**
**AN ATTACHMENT**

**SMCS-6104** **i01601933**

| NOTE | PART NUMBER | QTY | PART NAME 1 2 3 4 5 6 (PRODUCT LEVEL) | SEE PAGE |
|---|---|---|---|---|
| Y | *112-1922* | 1 | BUCKET GP-MULTIPURPOSE | 672 |
| Y | **185-1839** | 2 | CYLINDER GP-MULTIPURPOSE BUKT | 382 |
| Y | *118-4930* | 1 | LINES GP-MULTIPURPOSE BUCKET | 470 |
| Y | *9R-4668* | 1 | MOUNTING GP-CYLINDER | 527 |
| | **106-9387** | 1 | FILM-INDICATOR | |

Y-SEPARATE ILLUSTRATION

**<END>**

# WORK TOOLS

## *9R-5202* BUCKET AS-GENERAL PURPOSE

**S/N: BXC1-UP; DSX1-UP**
**1.0 CU M (1.31 CU YD)**
**FOR USE WITH ALL WHEEL STEER**
**AN ATTACHMENT**

**SMCS-6101** **i01953282**

| NOTE | REF NO | GRAPHIC REF | PART NUMBER | QTY | PART NAME 1 2 3 4 5 6 (PRODUCT LEVEL) | SEE PAGE |
|---|---|---|---|---|---|---|
| | 1 | 1 | **9R-5206** | 1 | EDGE-RH | |
| | 2 | 1 | **9R-5205** | 1 | EDGE-LH | |
| | 3 | 1 | **9R-5832** | 2 | EDGE | |
| | 4 | 1 | **9R-5313** | 1 | EDGE | |
| | 5 | 1 | **9R-0336** | 2 | BRACKET AS-LIFT (RH) | |
| | | | | | (EACH INCLUDES) | |
| | 5A | 1 | **9R-0111** | 1 | BEARING-SLEEVE | |
| | 6 | 1 | **9R-0343** | 2 | BRACKET AS-LIFT (LH) | |
| | | | | | (EACH INCLUDES) | |
| | 6A | 1 | **9R-0111** | 1 | BEARING-SLEEVE | |
| | 7 | 1 | **9R-0371** | 1 | BRACKET AS-TILT (RH) | |
| | 7A | 1 | **9R-4485** | 1 | BOSS | |
| | 7B | 1 | **9R-4486** | 1 | BOSS | |
| | 8 | 1 | **9R-0372** | 1 | BRACKET AS-TILT (LH) | |
| | 8A | 1 | **9R-4485** | 1 | BOSS | |
| | 8B | 1 | **9R-4486** | 1 | BOSS | |

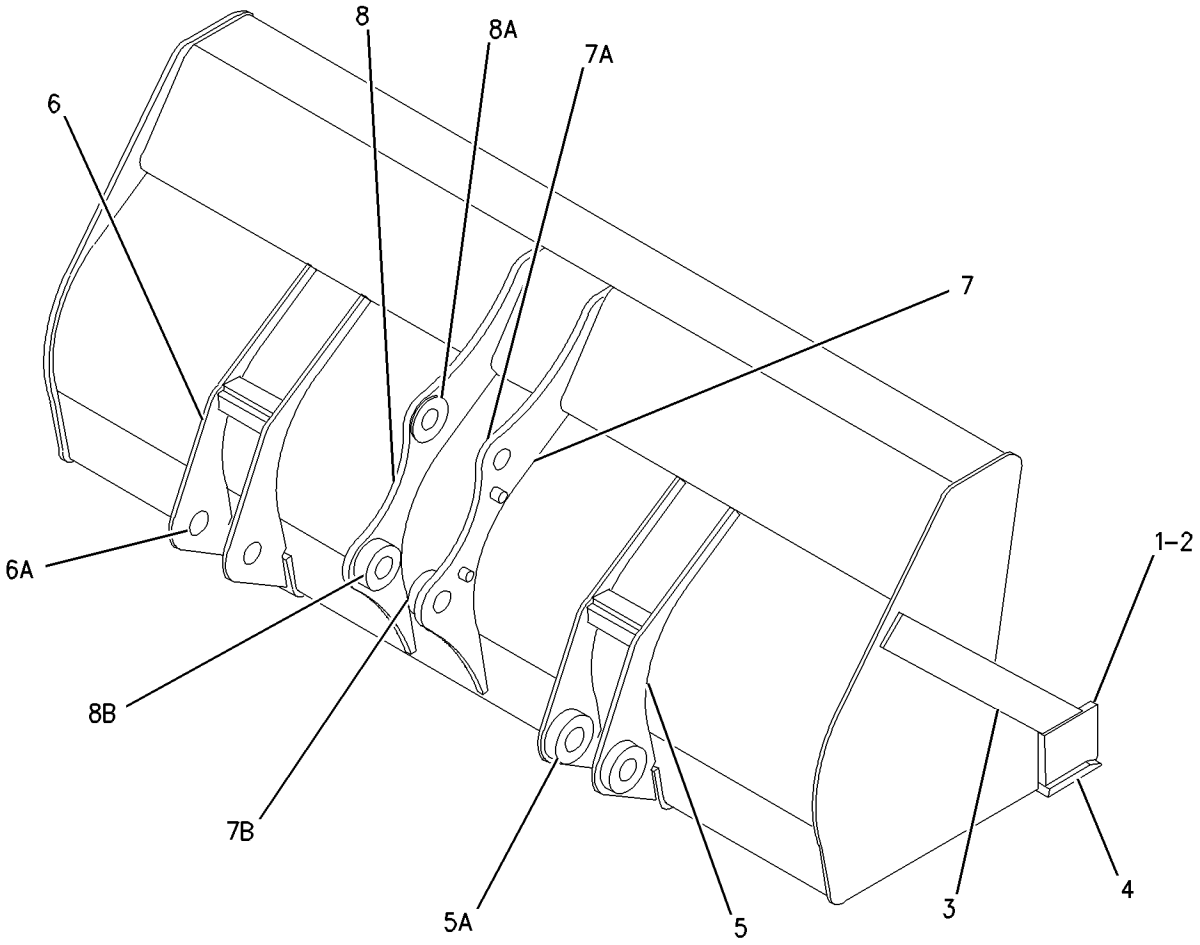


GRAPHIC #1 **<END>** g01006050

# WORK TOOLS

## *9R-5989* BUCKET AS-GENERAL PURPOSE

**S/N: BXC1-UP; DSX1-UP**
**0.96 CU M (1.25 CU YD)**
**AN ATTACHMENT**

**SMCS-6101** **i01953281**

| NOTE | REF NO | GRAPHIC REF | PART NUMBER | QTY | PART NAME 1 2 3 4 5 6 (PRODUCT LEVEL) | SEE PAGE |
|---|---|---|---|---|---|---|
| | 1 | 1 | **9R-5205** | 1 | EDGE-LH | |
| | 2 | 1 | **9R-5206** | 1 | EDGE-RH | |
| | 3 | 1 | **9R-0376** | 2 | EDGE | |
| | 4 | 1 | **9R-4672** | 1 | EDGE | |
| | 5 | 1 | *9R-0336* | 2 | BRACKET AS-LIFT (RH) | |
| | 5A | 1 | **9R-0111** | 2 | BEARING-SLEEVE | |
| | 6 | 1 | *9R-0343* | 2 | BRACKET AS-LIFT (LH) | |
| | 6A | 1 | **9R-0111** | 2 | BEARING-SLEEVE | |
| | 7 | 1 | *9R-0371* | 1 | BRACKET AS-TILT (RH) | |
| | 7A | 1 | **9R-4485** | 1 | BOSS | |
| | 7B | 1 | **9R-4486** | 1 | BOSS | |
| | 8 | 1 | *9R-0372* | 1 | BRACKET AS-TILT (LH) | |
| | 8A | 1 | **9R-4485** | 1 | BOSS | |
| | 8B | 1 | **9R-4486** | 1 | BOSS | |

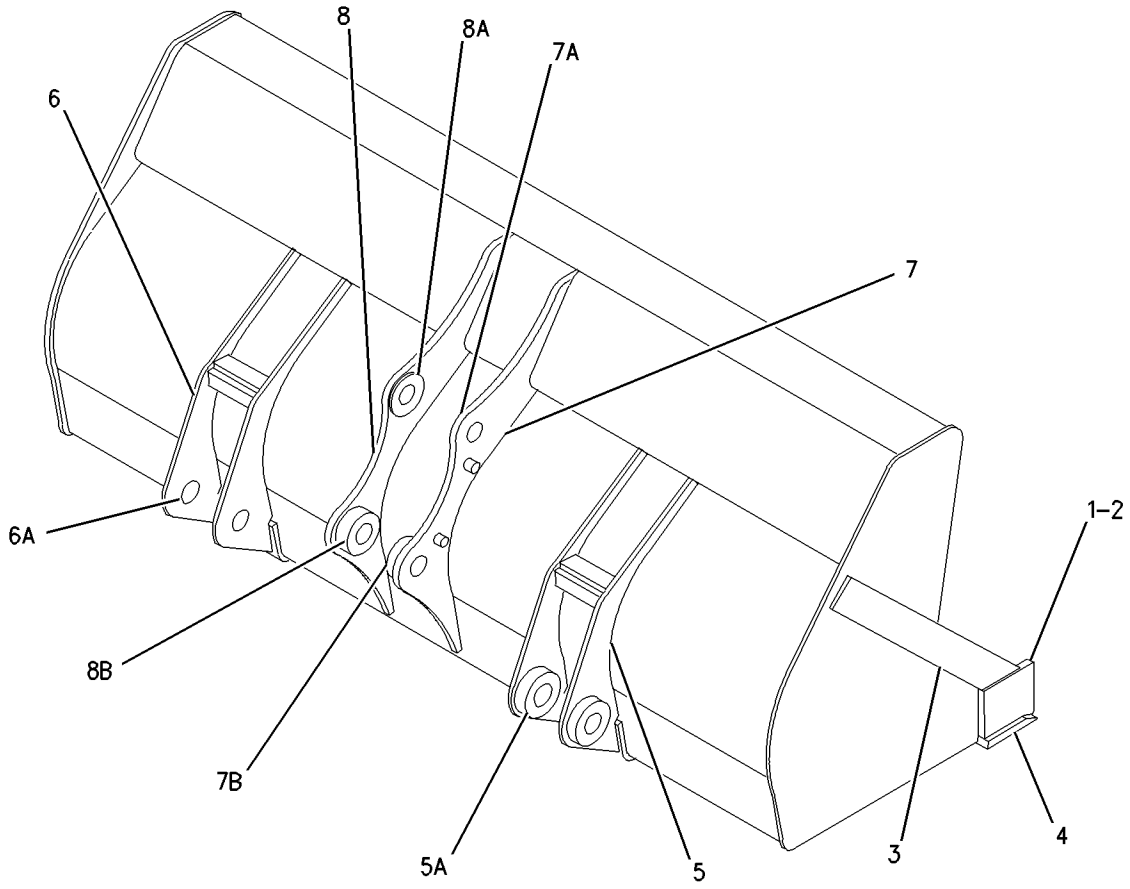


GRAPHIC #1 **<END>** g01006074

# WORK TOOLS

## *112-1931* BUCKET AS-GENERAL PURPOSE

**S/N: BXC1-UP; DSX1-UP**
**1.0 CU M (1.31 CU YD)**
**AN ATTACHMENT**

**SMCS-6101** **i01953274**

| NOTE | REF NO | GRAPHIC REF | PART NUMBER | QTY | PART NAME 1 2 3 4 5 6 (PRODUCT LEVEL) | SEE PAGE |
|---|---|---|---|---|---|---|
| | 1 | 1 | **9R-5205** | 1 | EDGE-LH | |
| | 2 | 1 | **9R-5206** | 1 | EDGE-RH | |
| | 3 | 1 | **9R-5832** | 2 | EDGE | |
| | 4 | 1 | **9R-5313** | 1 | EDGE | |
| | 5 | 1 | *113-9083* | 1 | BRACKET AS-RH | |
| | 5A | 1 | **9R-1496** | 2 | BEARING-SLEEVE (40.196MM ID) | |
| | 6 | 1 | *113-9084* | 1 | BRACKET AS-LH | |
| | 6A | 1 | **9R-1496** | 2 | BEARING-SLEEVE (40.196MM ID) | |

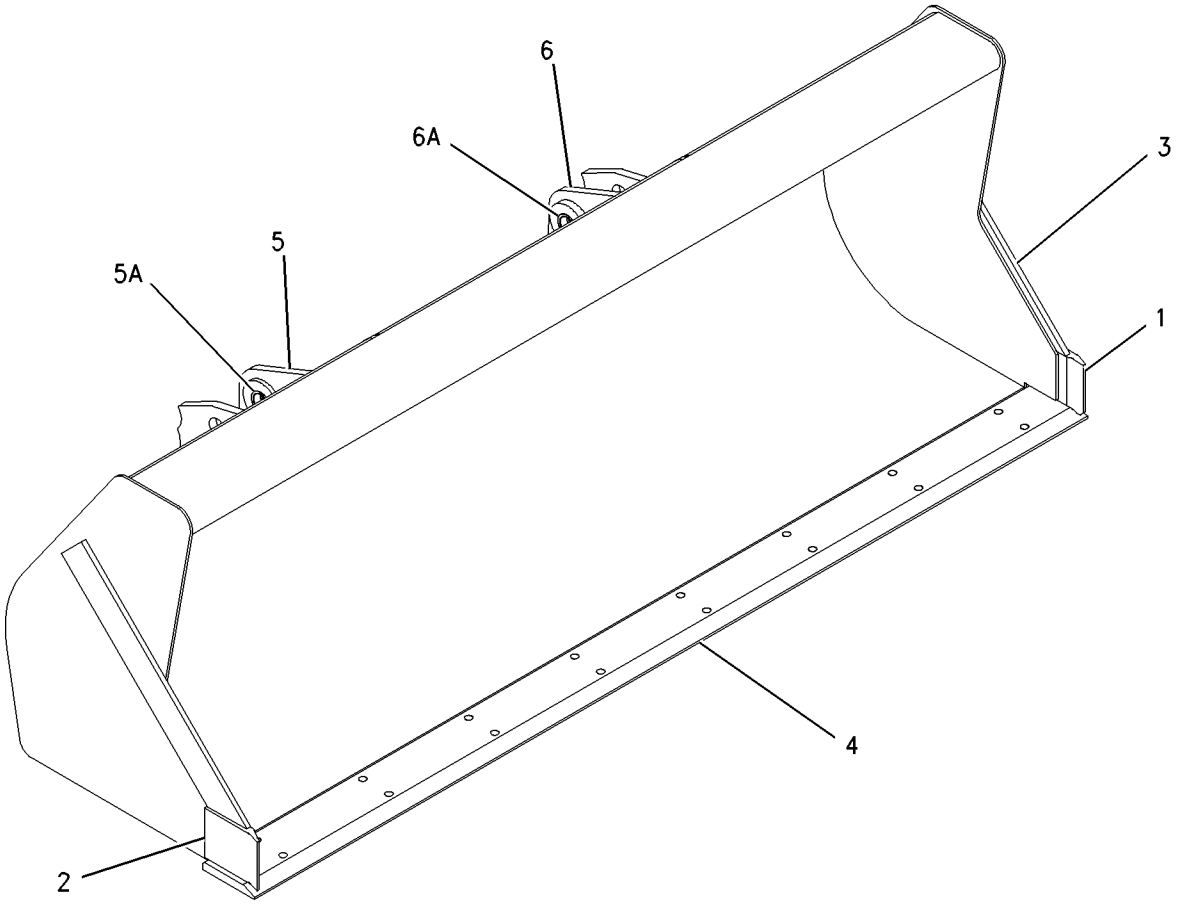


GRAPHIC #1 **<END>** g01006349

# WORK TOOLS

## *112-1933* BUCKET AS-GENERAL PURPOSE

**S/N: BXC1-UP; DSX1-UP**
**.95 CU M (1.25 CU YD)**
**AN ATTACHMENT**

**SMCS-6101** **i01953273**

| NOTE | REF NO | GRAPHIC REF | PART NUMBER | QTY | PART NAME 1 2 3 4 5 6 (PRODUCT LEVEL) | SEE PAGE |
|---|---|---|---|---|---|---|
| | 1 | 1 | **9R-5205** | 1 | EDGE-LH | |
| | 2 | 1 | **9R-5206** | 1 | EDGE-RH | |
| | 3 | 1 | **9R-0376** | 2 | EDGE | |
| | 4 | 1 | **9R-4672** | 1 | EDGE | |
| | 5 | 1 | *113-9083* | 1 | BRACKET AS-RH | |
| | 5A | 1 | **9R-1496** | 2 | BEARING-SLEEVE (40.196MM ID) | |
| | 6 | 1 | *113-9084* | 1 | BRACKET AS-LH | |
| | 6A | 1 | **9R-1496** | 2 | BEARING-SLEEVE (40.196MM ID) | |

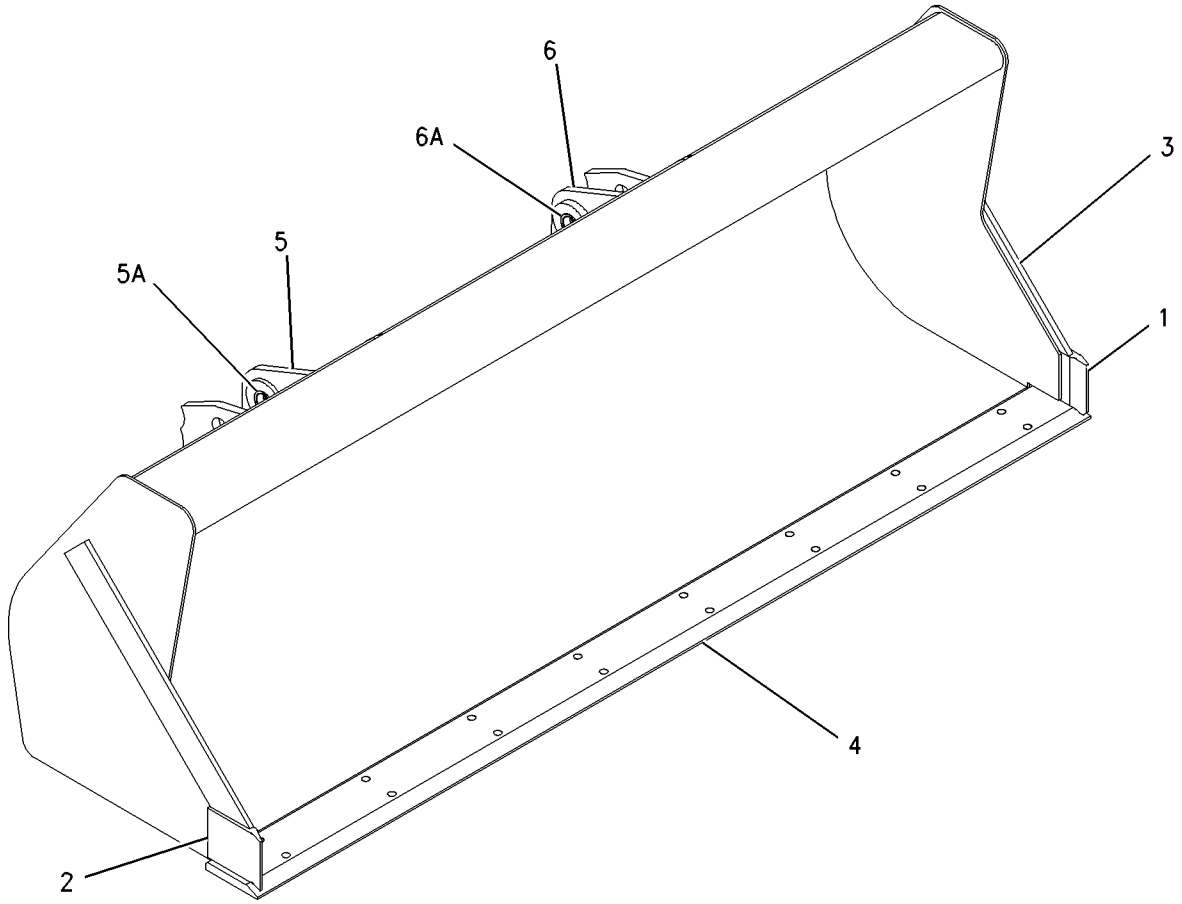


GRAPHIC #1 **<END>** g01006349

# WORK TOOLS

## *151-7866* BUCKET GP-HOE—STANDARD DUTY

**S/N: BXC1-UP; DSX1-UP**
**(305MM) 12 INCH**
**PART OF 174-6362 BUCKET GP-HOE**
**AN ATTACHMENT**

**SMCS-6503** **i01953627**

| NOTE | REF NO | GRAPHIC REF | PART NUMBER | QTY | PART NAME 1 2 3 4 5 6 (PRODUCT LEVEL) | SEE PAGE |
|---|---|---|---|---|---|---|
| C | 1 | 1 | *135-8206* | 3 | TOOTH GP-UNI | |
| | | | | | (EACH INCLUDES) | |
| | 1A | 1 | **4F-3657** | 2 | BOLT-PLOW (5/8-11X2.75 IN) | |
| | 1B | 1 | **4K-0367** | 2 | NUT-FULL (5/8-11 THD) | |
| | 1C | 1 | **135-8203** | 1 | TOOTH-UNI | |
| | 2 | 1 | **154-5255** | 1 | EDGE | |
| | 3 | 1 | *151-7929* | 1 | BRACKET AS-LH | |
| | 3A | 1 | **9R-0320** | 1 | BEARING | |
| | 3B | 1 | **154-5257** | 1 | BEARING | |
| | 4 | 1 | *151-7930* | 1 | BRACKET AS-RH | |
| | 4A | 1 | **9R-0320** | 1 | BEARING | |
| | 4B | 1 | **154-5257** | 1 | BEARING | |

C-CHANGE FROM PREVIOUS TYPE

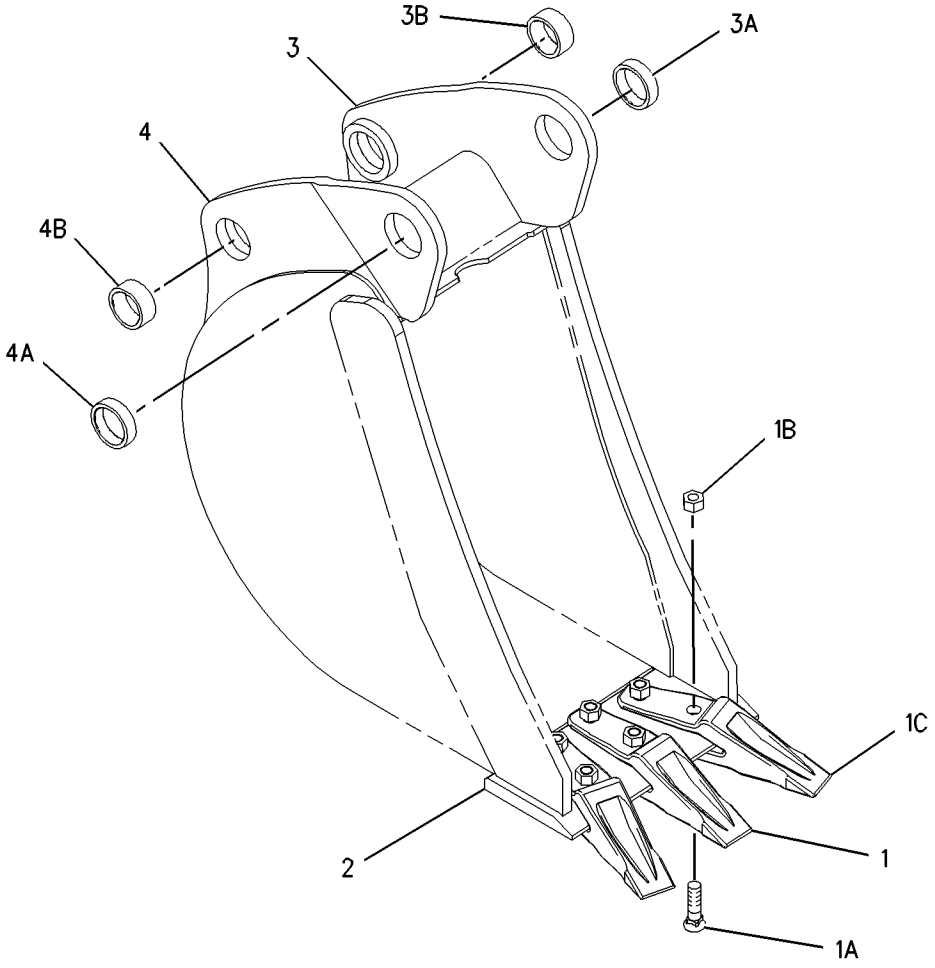


GRAPHIC #1 **<END>** g01001382

# WORK TOOLS

## *151-7867* BUCKET GP-HOE—STANDARD DUTY

**S/N: BXC1-UP; DSX1-UP**
**(458MM) 18 INCH**
**AN ATTACHMENT**

**SMCS-6503** **i02005043**

| NOTE | REF NO | GRAPHIC REF | PART NUMBER | QTY | PART NAME 1 2 3 4 5 6 (PRODUCT LEVEL) | SEE PAGE |
|---|---|---|---|---|---|---|
| C | 1 | 1 | *135-8206* | 3 | TOOTH GP-UNI | |
| | | | | | (EACH INCLUDES) | |
| C | 1A | 1 | **4F-3657** | 2 | BOLT-PLOW (5/8-11X2.75 IN) | |
| | 1B | 1 | **4K-0367** | 2 | NUT-FULL (5/8-11 THD) | |
| | 1C | 1 | **135-8203** | 1 | TOOTH-UNI | |
| | 2 | 1 | **128-3778** | 1 | EDGE | |
| | 3 | 1 | *151-7902* | 1 | BRACKET AS | |
| | 3A | 1 | **9R-0162** | 1 | BEARING | |
| | 3B | 1 | **168-0480** | 1 | BEARING-SLEEVE | |
| | 4 | 1 | *151-7903* | 1 | BRACKET AS | |
| | 4A | 1 | **9R-0162** | 1 | BEARING | |
| | 4B | 1 | **168-0480** | 1 | BEARING-SLEEVE | |

C-CHANGE FROM PREVIOUS TYPE

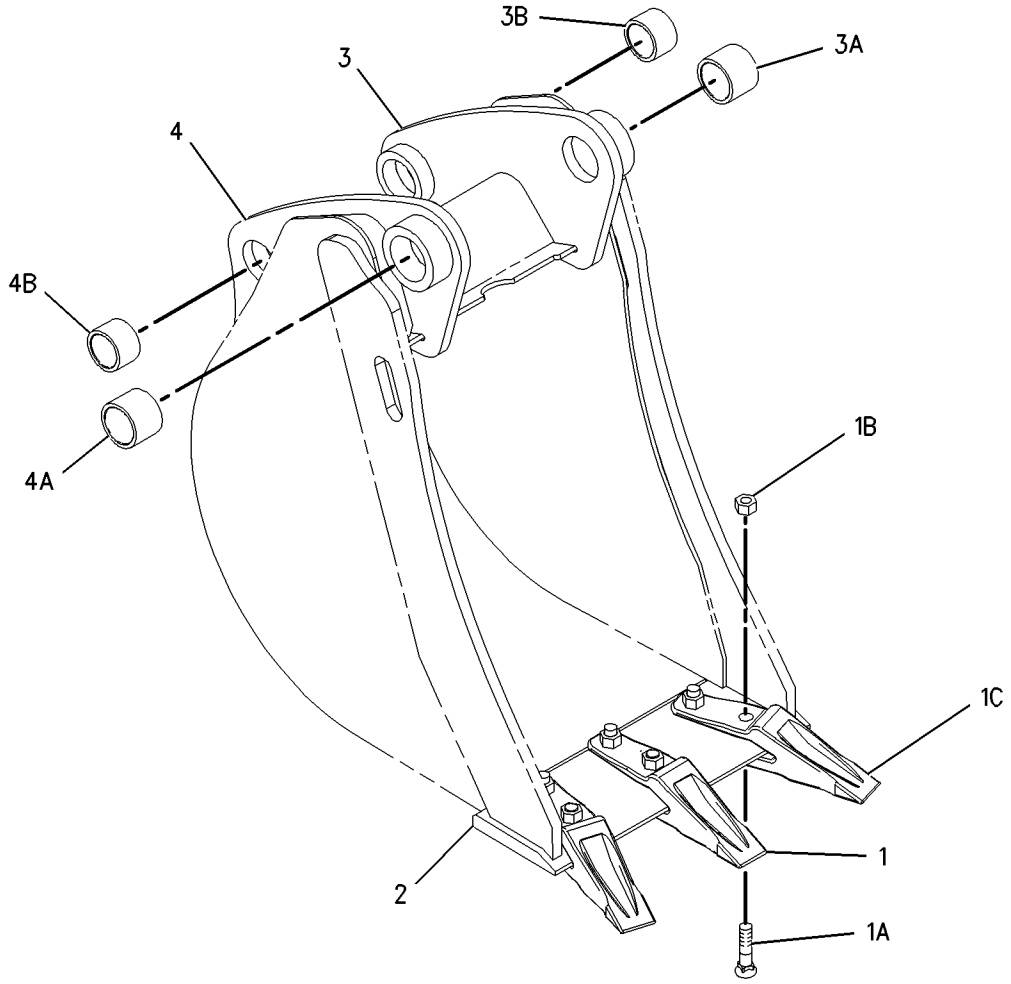


GRAPHIC #1 **<END>** g01001275

# WORK TOOLS

## *151-7868* BUCKET GP-HOE—STANDARD DUTY

**S/N: BXC1-UP; DSX1-UP**
**(610MM) 24 INCH**
**AN ATTACHMENT**

**SMCS-6503** **i02005045**

| NOTE | REF NO | GRAPHIC REF | PART NUMBER | QTY | PART NAME 1 2 3 4 5 6 (PRODUCT LEVEL) | SEE PAGE |
|---|---|---|---|---|---|---|
| C | 1 | 1 | *135-8206* | 4 | TOOTH GP-UNI | |
| | | | | | (EACH INCLUDES) | |
| C | 1A | 1 | **4F-3657** | 2 | BOLT-PLOW (5/8-11X2.75 IN) | |
| | 1B | 1 | **4K-0367** | 2 | NUT-FULL (5/8-11 THD) | |
| | 1C | 1 | **135-8203** | 1 | TOOTH-UNI | |
| | 2 | 1 | **128-3094** | 1 | EDGE | |
| | 3 | 1 | *151-7902* | 1 | BRACKET AS | |
| | 3A | 1 | **9R-0162** | 1 | BEARING | |
| | 3B | 1 | **168-0480** | 1 | BEARING-SLEEVE | |
| | 4 | 1 | *151-7903* | 1 | BRACKET AS | |
| | 4A | 1 | **9R-0162** | 1 | BEARING | |
| | 4B | 1 | **168-0480** | 1 | BEARING-SLEEVE | |

C-CHANGE FROM PREVIOUS TYPE

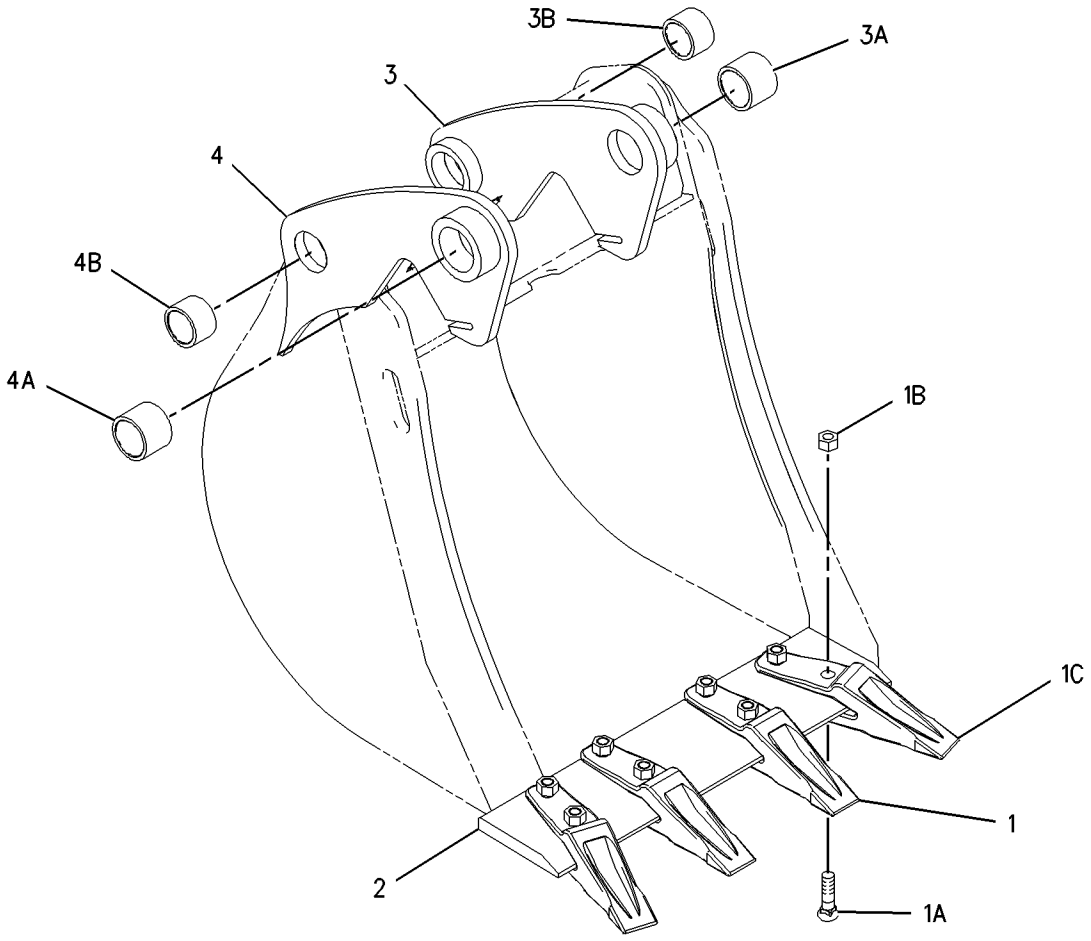


GRAPHIC #1 **<END>** g01001343

# WORK TOOLS

## *151-7869* BUCKET GP-HOE—STANDARD DUTY

**S/N: BXC1-UP; DSX1-UP**
**(762MM) 30 INCH**
**AN ATTACHMENT**

**SMCS-6503** **i02005046**

| NOTE | REF NO | GRAPHIC REF | PART NUMBER | QTY | PART NAME 1 2 3 4 5 6 (PRODUCT LEVEL) | SEE PAGE |
|---|---|---|---|---|---|---|
| C | 1 | 1 | *135-8206* | 5 | TOOTH GP-UNI | |
| | | | | | (EACH INCLUDES) | |
| C | 1A | 1 | **4F-3657** | 2 | BOLT-PLOW (5/8-11X2.75 IN) | |
| | 1B | 1 | **4K-0367** | 2 | NUT-FULL (5/8-11 THD) | |
| | 1C | 1 | **135-8203** | 1 | TOOTH-UNI | |
| | 2 | 1 | **131-2117** | 1 | EDGE | |
| | 3 | 1 | *151-7902* | 1 | BRACKET AS | |
| | 3A | 1 | **9R-0162** | 1 | BEARING | |
| | 3B | 1 | **168-0480** | 1 | BEARING-SLEEVE | |
| | 4 | 1 | *151-7903* | 1 | BRACKET AS | |
| | 4A | 1 | **9R-0162** | 1 | BEARING | |
| | 4B | 1 | **168-0480** | 1 | BEARING-SLEEVE | |

C-CHANGE FROM PREVIOUS TYPE

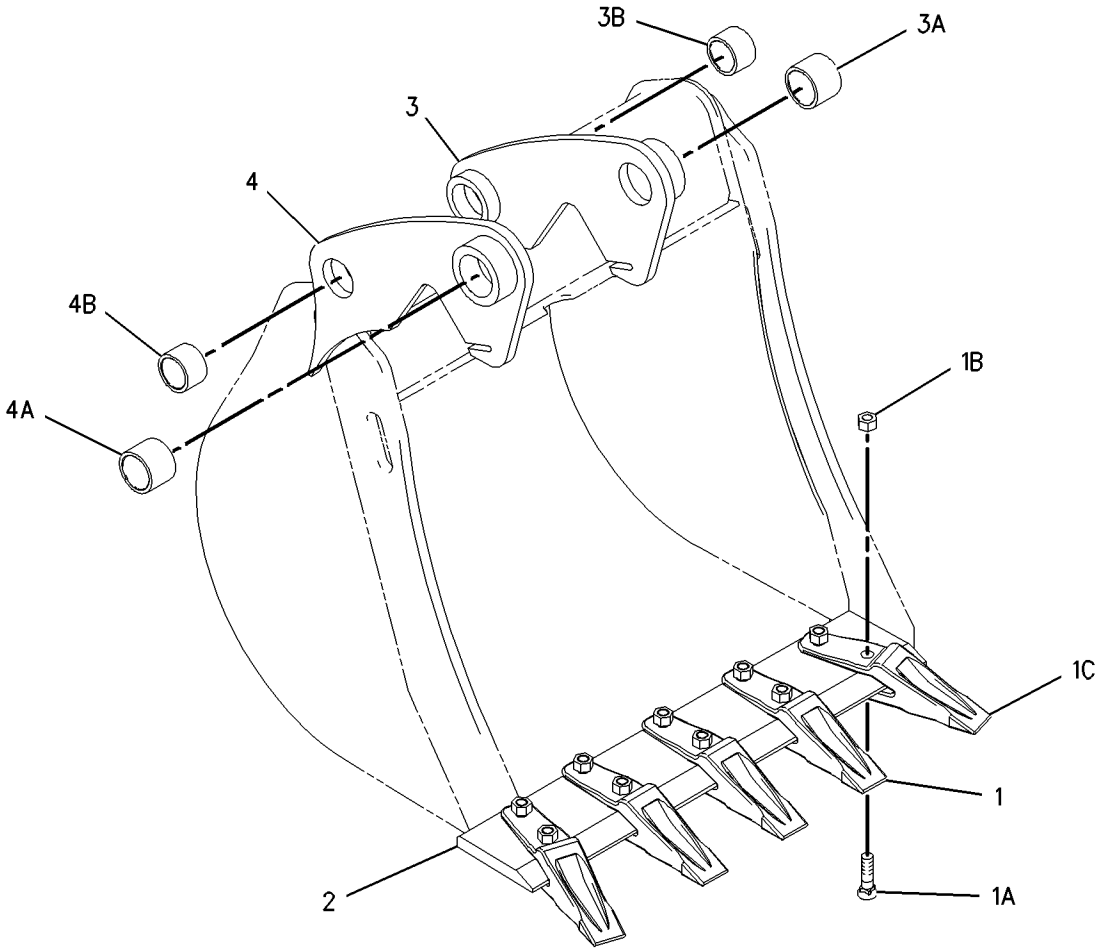


GRAPHIC #1 **<END>** g01001319

# WORK TOOLS

## *151-7870* BUCKET GP-HOE—STANDARD DUTY

**S/N: BXC1-UP; DSX1-UP**
**(914MM) 36 INCH**
**AN ATTACHMENT**

**SMCS-6503** **i02005050**

| NOTE | REF NO | GRAPHIC REF | PART NUMBER | QTY | PART NAME 1 2 3 4 5 6 (PRODUCT LEVEL) | SEE PAGE |
|---|---|---|---|---|---|---|
| C | 1 | 1 | *135-8206* | 6 | TOOTH GP-UNI | |
| | | | | | (EACH INCLUDES) | |
| C | 1A | 1 | **4F-3657** | 2 | BOLT-PLOW (5/8-11X2.75 IN) | |
| | 1B | 1 | **4K-0367** | 2 | NUT-FULL (5/8-11 THD) | |
| | 1C | 1 | **135-8203** | 1 | TOOTH-UNI | |
| | 2 | 1 | **130-2057** | 1 | EDGE | |
| | 3 | 1 | *151-7902* | 1 | BRACKET AS | |
| | 3A | 1 | **9R-0162** | 1 | BEARING | |
| | 3B | 1 | **168-0480** | 1 | BEARING-SLEEVE | |
| | 4 | 1 | *151-7903* | 1 | BRACKET AS | |
| | 4A | 1 | **9R-0162** | 1 | BEARING | |
| | 4B | 1 | **168-0480** | 1 | BEARING-SLEEVE | |

C-CHANGE FROM PREVIOUS TYPE

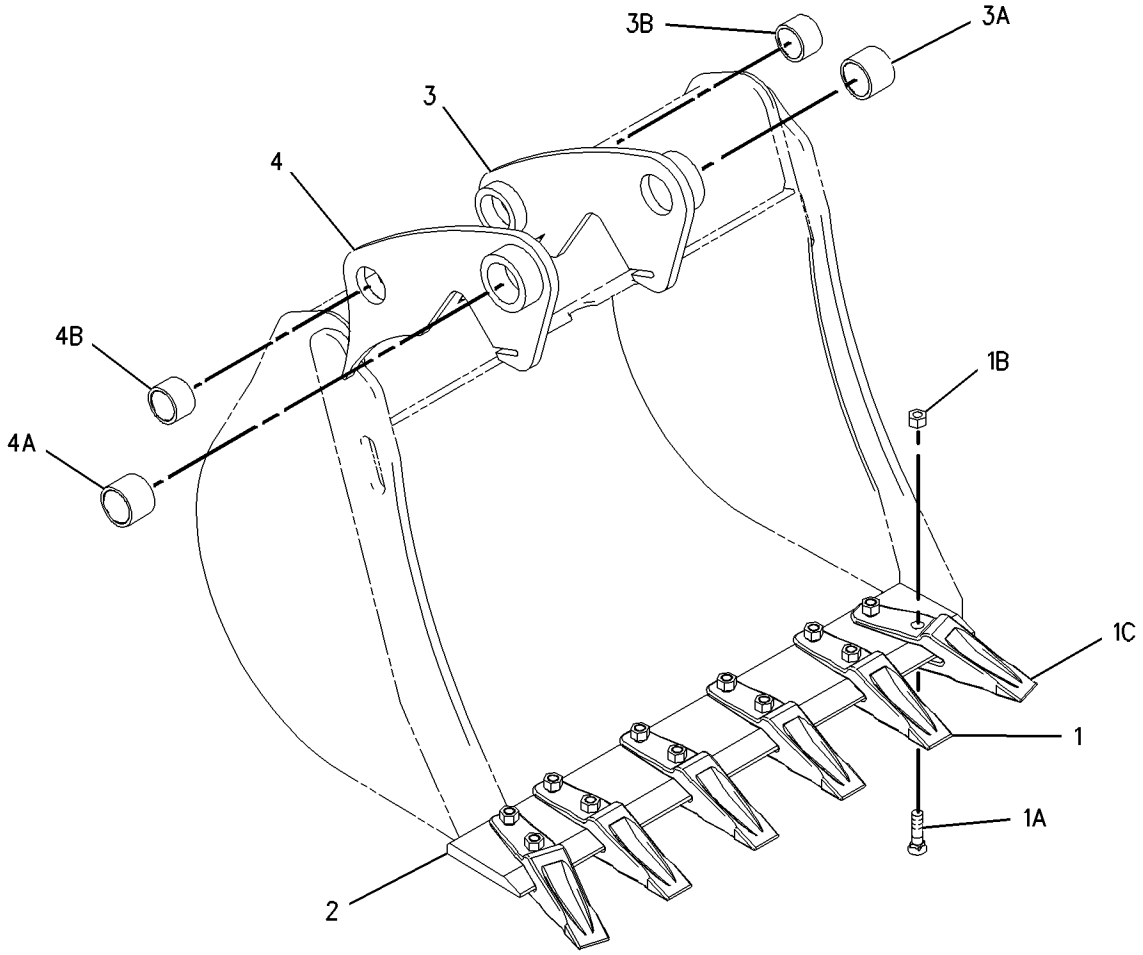


GRAPHIC #1 **<END>** g01001290

# WORK TOOLS

## *151-7877* BUCKET GP-HOE—HEAVY DUTY

**S/N: BXC1-UP; DSX1-UP**
**(305MM) 12 INCH**
**PART OF 174-6365 BUCKET GP-HOE**
**AN ATTACHMENT**

**SMCS-6503** **i01953630**

| NOTE | REF NO | GRAPHIC REF | PART NUMBER | QTY | PART NAME 1 2 3 4 5 6 (PRODUCT LEVEL) | SEE PAGE |
|---|---|---|---|---|---|---|
| C | 1 | 1 | *135-8206* | 3 | TOOTH GP-UNI | |
| | | | | | (EACH INCLUDES) | |
| | 1A | 1 | **4F-3657** | 1 | BOLT-PLOW (5/8-11X2.75 IN) | |
| | 1B | 1 | **4K-0367** | 1 | NUT-FULL (5/8-11 THD) | |
| | 1C | 1 | **135-8203** | 1 | TOOTH-UNI | |
| | 2 | 1 | **9R-8987** | 1 | EDGE-LH | |
| | 3 | 1 | **9R-8988** | 1 | EDGE-RH | |
| | 4 | 1 | *151-7929* | 1 | BRACKET AS-LH | |
| | 4A | 1 | **9R-0320** | 1 | BEARING | |
| | 4B | 1 | **154-5257** | 1 | BEARING | |
| | 5 | 1 | *151-7930* | 1 | BRACKET AS-RH | |
| | 5A | 1 | **9R-0320** | 1 | BEARING | |
| | 5B | 1 | **154-5257** | 1 | BEARING | |
| | 6 | 1 | **154-5255** | 1 | EDGE | |
| | 7 | 1 | **151-7927** | 2 | PLATE | |

C-CHANGE FROM PREVIOUS TYPE

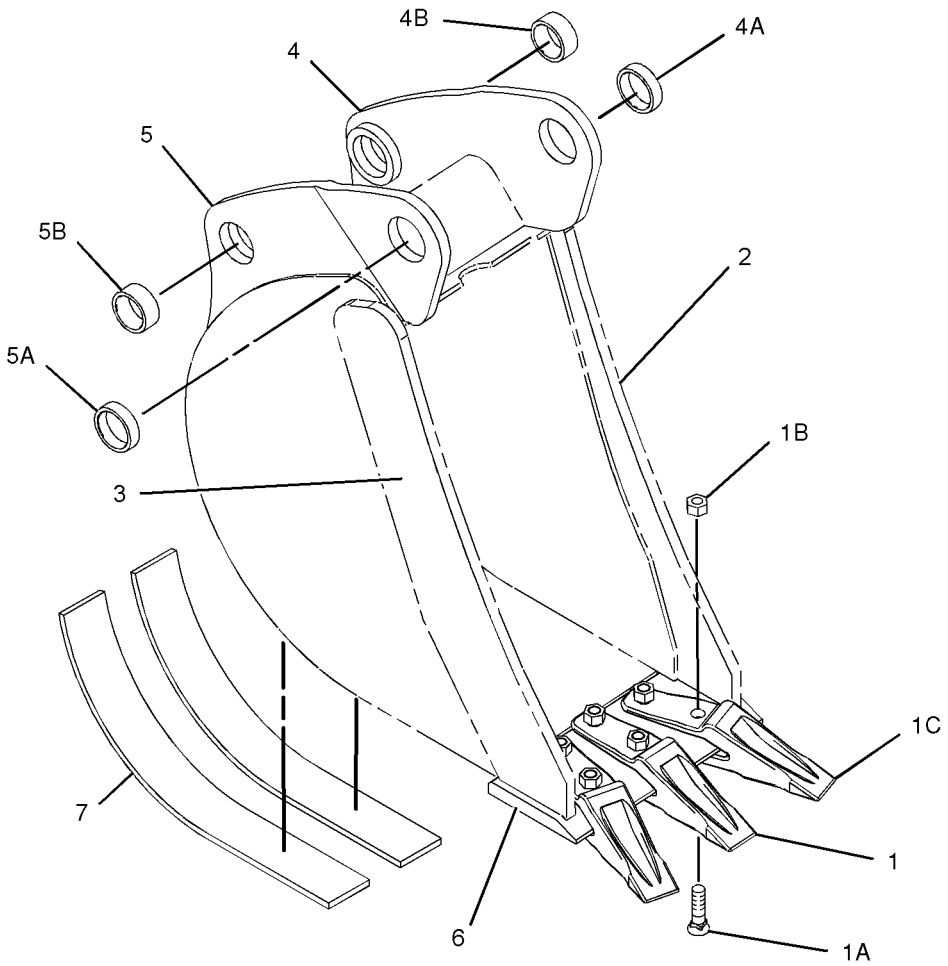


GRAPHIC #1 **<END>** g01015081

# WORK TOOLS

## *151-7879* BUCKET GP-HOE—HEAVY DUTY

**S/N: BXC1-UP; DSX1-UP**
**(458MM) 18 INCH**
**AN ATTACHMENT**

**SMCS-6503** **i02005056**

| NOTE | REF NO | GRAPHIC REF | PART NUMBER | QTY | PART NAME 1 2 3 4 5 6 (PRODUCT LEVEL) | SEE PAGE |
|---|---|---|---|---|---|---|
| C | 1 | 1 | *135-8206* | 3 | TOOTH GP-UNI | |
| | | | | | (EACH INCLUDES) | |
| C | 1A | 1 | **4F-3657** | 2 | BOLT-PLOW (5/8-11X2.75 IN) | |
| | 1B | 1 | **4K-0367** | 2 | NUT-FULL (5/8-11 THD) | |
| | 1C | 1 | **135-8203** | 1 | TOOTH-UNI | |
| | 2 | 1 | **9R-8987** | 1 | EDGE-LH | |
| | 3 | 1 | **9R-8988** | 1 | EDGE-RH | |
| | 4 | 1 | **128-3778** | 1 | EDGE | |
| | 5 | 1 | **151-7927** | 3 | PLATE | |
| | 6 | 1 | *151-7902* | 1 | BRACKET AS | |
| | 6A | 1 | **9R-0162** | 1 | BEARING | |
| | 6B | 1 | **168-0480** | 1 | BEARING-SLEEVE | |
| | 7 | 1 | *151-7903* | 1 | BRACKET AS | |
| | 7A | 1 | **9R-0162** | 1 | BEARING | |
| | 7B | 1 | **168-0480** | 1 | BEARING-SLEEVE | |

C-CHANGE FROM PREVIOUS TYPE

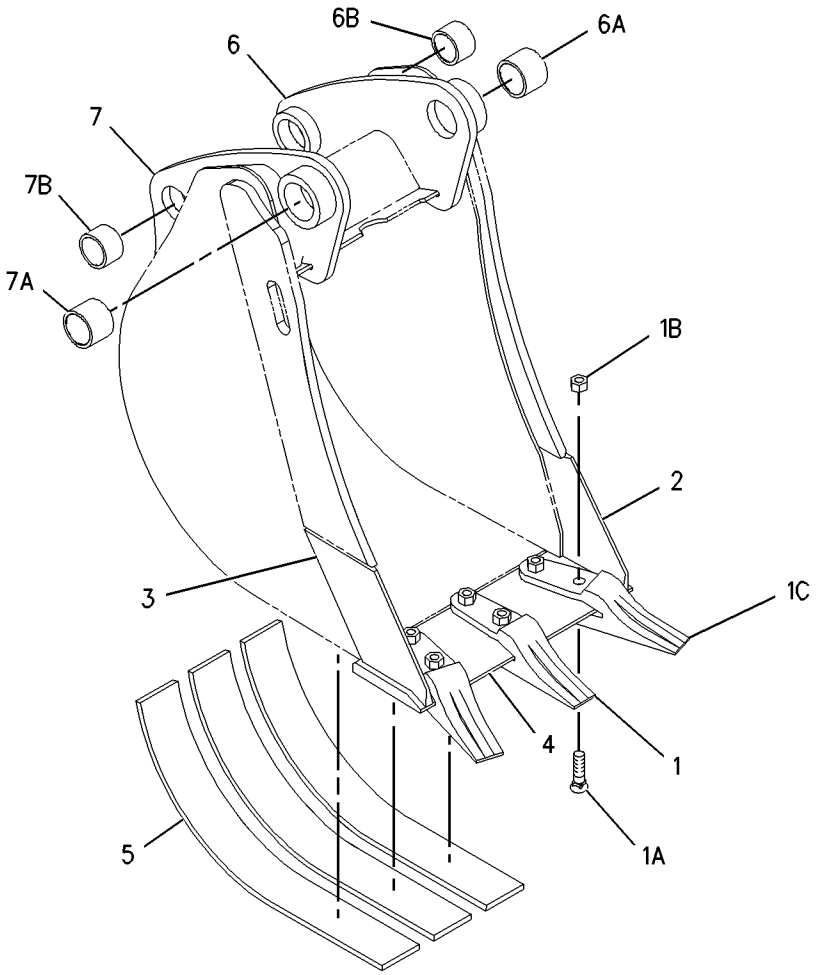


GRAPHIC #1 **<END>** g01003002

# WORK TOOLS

## *151-7880* BUCKET GP-HOE—HEAVY DUTY

**S/N: BXC1-UP; DSX1-UP**
**(610MM) 24 INCH**
**AN ATTACHMENT**

**SMCS-6503** **i02005068**

| NOTE | REF NO | GRAPHIC REF | PART NUMBER | QTY | PART NAME 1 2 3 4 5 6 (PRODUCT LEVEL) | SEE PAGE |
|---|---|---|---|---|---|---|
| C | 1 | 1 | *135-8206* | 4 | TOOTH GP-UNI | |
| | | | | | (EACH INCLUDES) | |
| C | 1A | 1 | **4F-3657** | 2 | BOLT-PLOW (5/8-11X2.75 IN) | |
| | 1B | 1 | **4K-0367** | 2 | NUT-FULL (5/8-11 THD) | |
| | 1C | 1 | **135-8203** | 1 | TOOTH-UNI | |
| | 2 | 1 | **9R-8987** | 1 | EDGE-LH | |
| | 3 | 1 | **9R-8988** | 1 | EDGE-RH | |
| | 4 | 1 | **128-3094** | 1 | EDGE | |
| | 5 | 1 | **151-7927** | 4 | PLATE | |
| | 6 | 1 | *151-7902* | 1 | BRACKET AS | |
| | 6A | 1 | **9R-0162** | 1 | BEARING | |
| | 6B | 1 | **168-0480** | 1 | BEARING-SLEEVE | |
| | 7 | 1 | *151-7903* | 1 | BRACKET AS | |
| | 7A | 1 | **9R-0162** | 1 | BEARING | |
| | 7B | 1 | **168-0480** | 1 | BEARING-SLEEVE | |

C-CHANGE FROM PREVIOUS TYPE

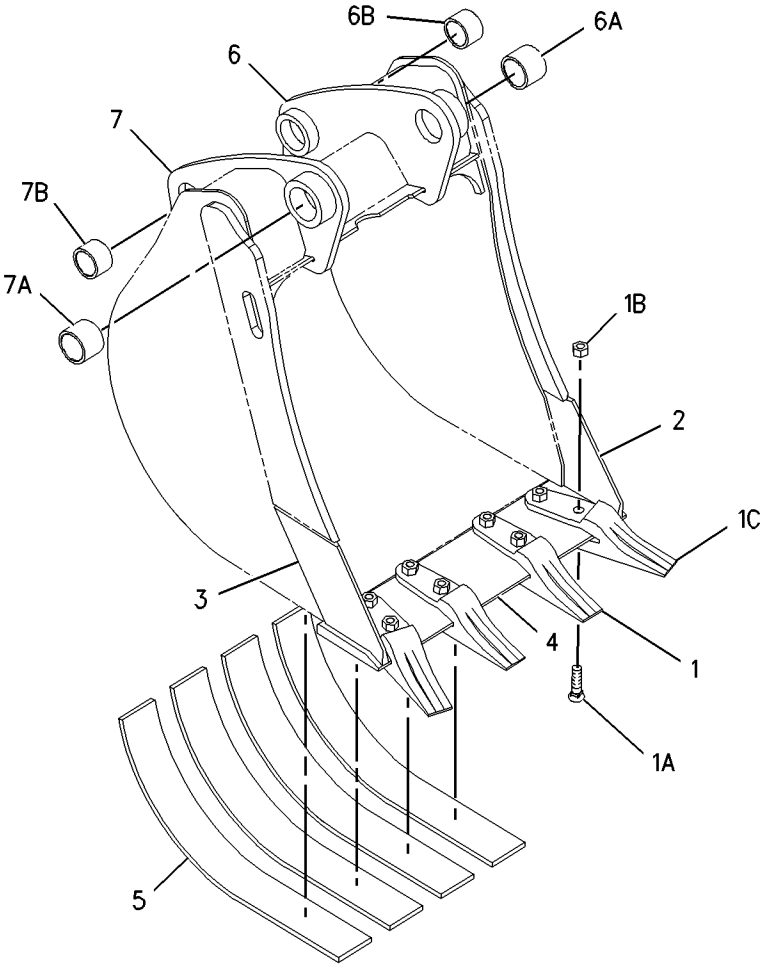


GRAPHIC #1 **<END>** g01003040

# WORK TOOLS

## *151-7881* BUCKET GP-HOE—HEAVY DUTY

**S/N: BXC1-UP; DSX1-UP**
**(762MM) 30 INCH**
**AN ATTACHMENT**

**SMCS-6503** **i02005069**

| NOTE | REF NO | GRAPHIC REF | PART NUMBER | QTY | PART NAME 1 2 3 4 5 6 (PRODUCT LEVEL) | SEE PAGE |
|---|---|---|---|---|---|---|
| C | 1 | 1 | *135-8206* | 5 | TOOTH GP-UNI | |
| | | | | | (EACH INCLUDES) | |
| C | 1A | 1 | **4F-3657** | 2 | BOLT-PLOW (5/8-11X2.75 IN) | |
| | 1B | 1 | **4K-0367** | 2 | NUT-FULL (5/8-11 THD) | |
| | 1C | 1 | **135-8203** | 1 | TOOTH-UNI | |
| | 2 | 1 | **9R-8987** | 1 | EDGE-LH | |
| | 3 | 1 | **9R-8988** | 1 | EDGE-RH | |
| | 4 | 1 | **131-2117** | 1 | EDGE | |
| | 5 | 1 | **151-7927** | 4 | PLATE | |
| | 6 | 1 | *151-7902* | 1 | BRACKET AS | |
| | 6A | 1 | **9R-0162** | 1 | BEARING | |
| | 6B | 1 | **168-0480** | 1 | BEARING-SLEEVE | |
| | 7 | 1 | *151-7903* | 1 | BRACKET AS | |
| | 7A | 1 | **9R-0162** | 1 | BEARING | |
| | 7B | 1 | **168-0480** | 1 | BEARING-SLEEVE | |

C-CHANGE FROM PREVIOUS TYPE

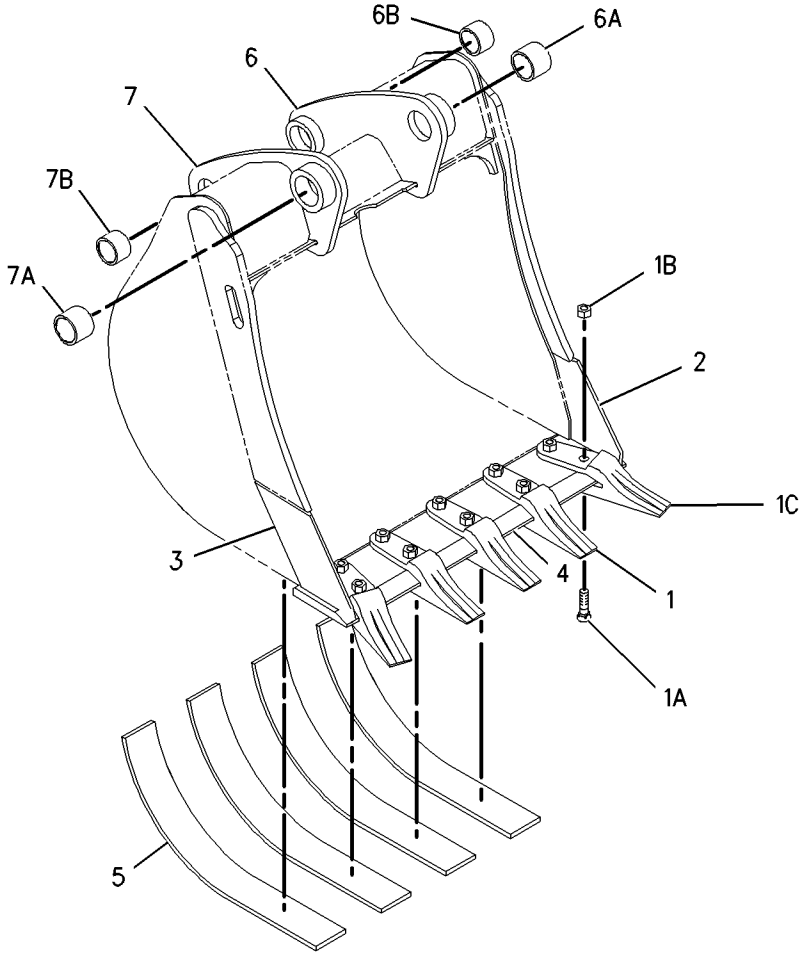


GRAPHIC #1 **<END>** g01003077

# WORK TOOLS

## *151-7882* BUCKET GP-HOE—HEAVY DUTY

**S/N: BXC1-UP; DSX1-UP**
**(914MM) 36 INCH**
**AN ATTACHMENT**

**SMCS-6503** **i02005075**

| NOTE | REF NO | GRAPHIC REF | PART NUMBER | QTY | PART NAME 1 2 3 4 5 6 (PRODUCT LEVEL) | SEE PAGE |
|---|---|---|---|---|---|---|
| C | 1 | 1 | *135-8206* | 6 | TOOTH GP-UNI | |
| | | | | | (EACH INCLUDES) | |
| C | 1A | 1 | **4F-3657** | 2 | BOLT-PLOW (5/8-11X2.75 IN) | |
| | 1B | 1 | **4K-0367** | 2 | NUT-FULL (5/8-11 THD) | |
| | 1C | 1 | **135-8203** | 1 | TOOTH-UNI | |
| | 2 | 1 | **9R-8987** | 1 | EDGE-LH | |
| | 3 | 1 | **9R-8988** | 1 | EDGE-RH | |
| | 4 | 1 | **130-2057** | 1 | EDGE | |
| | 5 | 1 | **151-7927** | 5 | PLATE | |
| | 6 | 1 | *151-7902* | 1 | BRACKET AS | |
| | 6A | 1 | **9R-0162** | 1 | BEARING | |
| | 6B | 1 | **168-0480** | 1 | BEARING-SLEEVE | |
| | 7 | 1 | *151-7903* | 1 | BRACKET AS | |
| | 7A | 1 | **9R-0162** | 1 | BEARING | |
| | 7B | 1 | **168-0480** | 1 | BEARING-SLEEVE | |

C-CHANGE FROM PREVIOUS TYPE

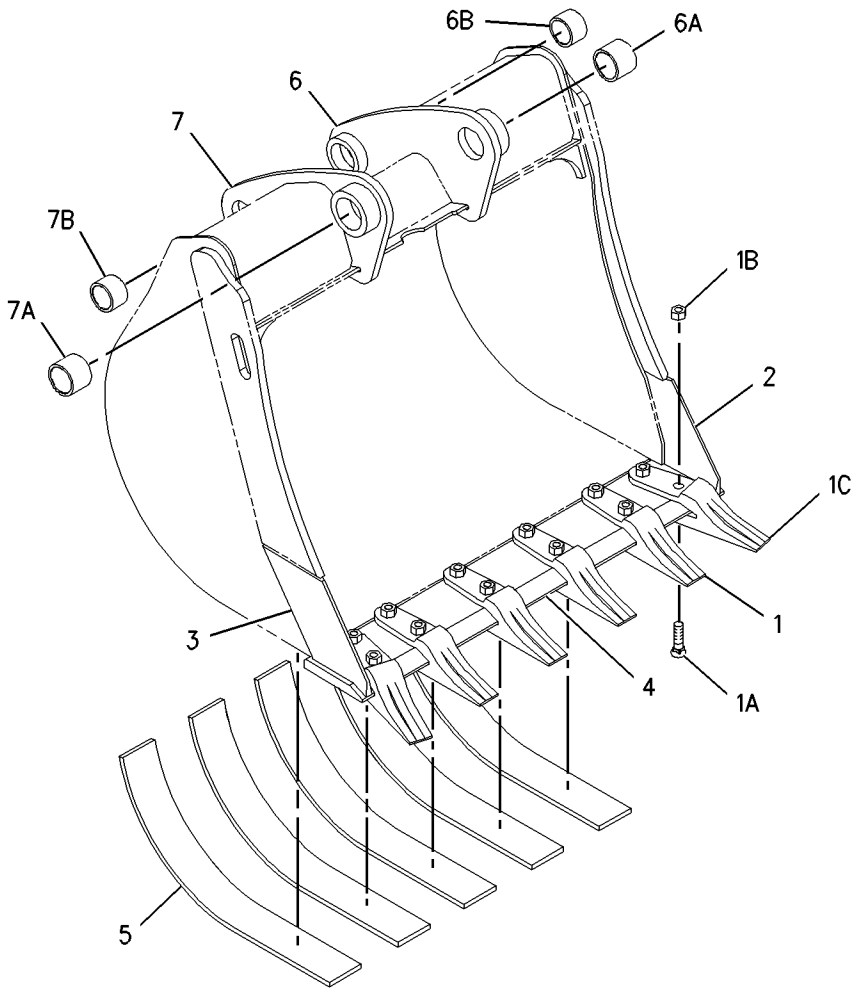


GRAPHIC #1 **<END>** g01003216

# WORK TOOLS

## *151-7887* BUCKET GP-HOE—HIGH CAPACITY

**S/N: BXC1-UP; DSX1-UP**
**(458MM) 18 INCH**
**AN ATTACHMENT**

**SMCS-6503** **i02005078**

| NOTE | REF NO | GRAPHIC REF | PART NUMBER | QTY | PART NAME 1 2 3 4 5 6 (PRODUCT LEVEL) | SEE PAGE |
|---|---|---|---|---|---|---|
| C | 1 | 1 | *135-8206* | 3 | TOOTH GP-UNI | |
| | | | | | (EACH INCLUDES) | |
| C | 1A | 1 | **4F-3657** | 2 | BOLT-PLOW (5/8-11X2.75 IN) | |
| | 1B | 1 | **4K-0367** | 2 | NUT-FULL (5/8-11 THD) | |
| | 1C | 1 | **135-8203** | 1 | TOOTH-UNI | |
| | 2 | 1 | **9R-8987** | 1 | EDGE-LH | |
| | 3 | 1 | **9R-8988** | 1 | EDGE-RH | |
| | 4 | 1 | **128-3778** | 1 | EDGE | |
| | 5 | 1 | *151-7902* | 1 | BRACKET AS | |
| | 5A | 1 | **9R-0162** | 1 | BEARING | |
| | 5B | 1 | **168-0480** | 1 | BEARING-SLEEVE | |
| | 6 | 1 | *151-7903* | 1 | BRACKET AS | |
| | 6A | 1 | **9R-0162** | 1 | BEARING | |
| | 6B | 1 | **168-0480** | 1 | BEARING-SLEEVE | |

C-CHANGE FROM PREVIOUS TYPE

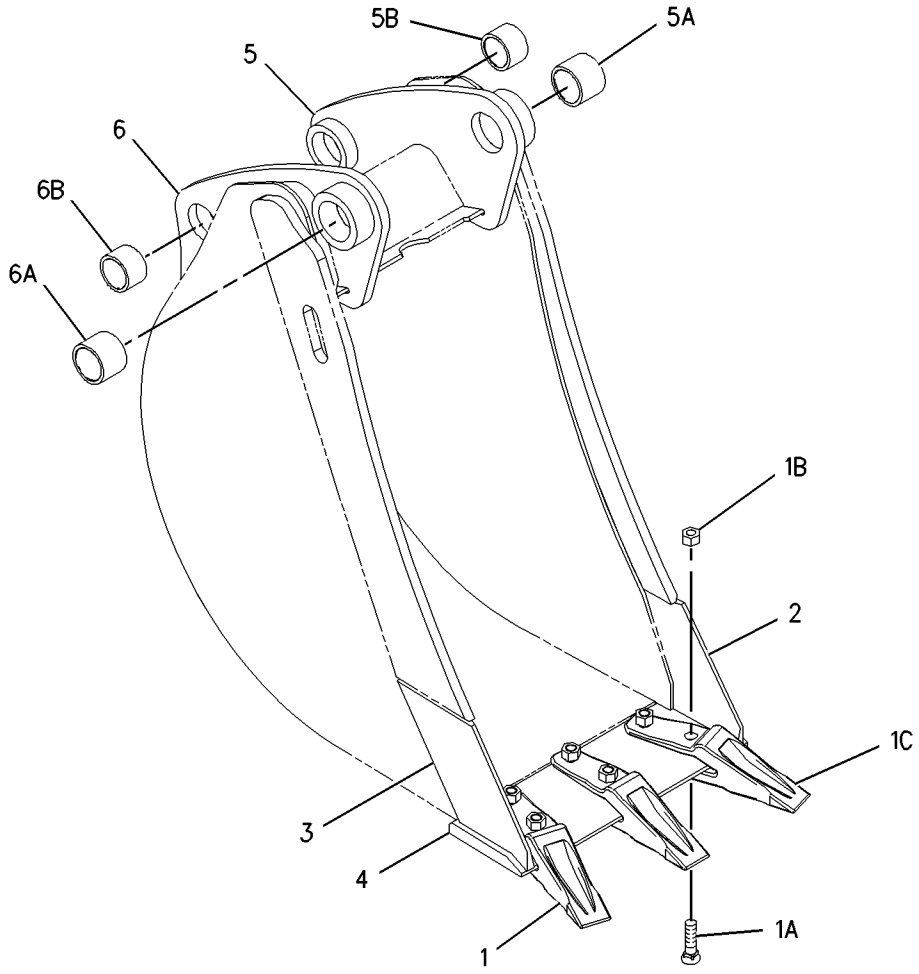


GRAPHIC #1 **<END>** g01002170

# WORK TOOLS

## *151-7888* BUCKET GP-HOE—HIGH CAPACITY

**S/N: BXC1-UP; DSX1-UP**
**(610MM) 24 INCH**
**AN ATTACHMENT**

**SMCS-6503** **i02005092**

| NOTE | REF NO | GRAPHIC REF | PART NUMBER | QTY | PART NAME 1 2 3 4 5 6 (PRODUCT LEVEL) | SEE PAGE |
|---|---|---|---|---|---|---|
| C | 1 | 1 | *135-8206* | 4 | TOOTH GP-UNI | |
| | | | | | (EACH INCLUDES) | |
| C | 1A | 1 | **4F-3657** | 2 | BOLT-PLOW (5/8-11X2.75 IN) | |
| | 1B | 1 | **4K-0367** | 2 | NUT-FULL (5/8-11 THD) | |
| | 1C | 1 | **135-8203** | 1 | TOOTH-UNI | |
| | 2 | 1 | **9R-8987** | 1 | EDGE-LH | |
| | 3 | 1 | **9R-8988** | 1 | EDGE-RH | |
| | 4 | 1 | **128-3094** | 1 | EDGE | |
| | 5 | 1 | *151-7902* | 1 | BRACKET AS | |
| | 5A | 1 | **9R-0162** | 1 | BEARING | |
| | 5B | 1 | **168-0480** | 1 | BEARING-SLEEVE | |
| | 6 | 1 | *151-7903* | 1 | BRACKET AS | |
| | 6A | 1 | **9R-0162** | 1 | BEARING | |
| | 6B | 1 | **168-0480** | 1 | BEARING-SLEEVE | |

C-CHANGE FROM PREVIOUS TYPE

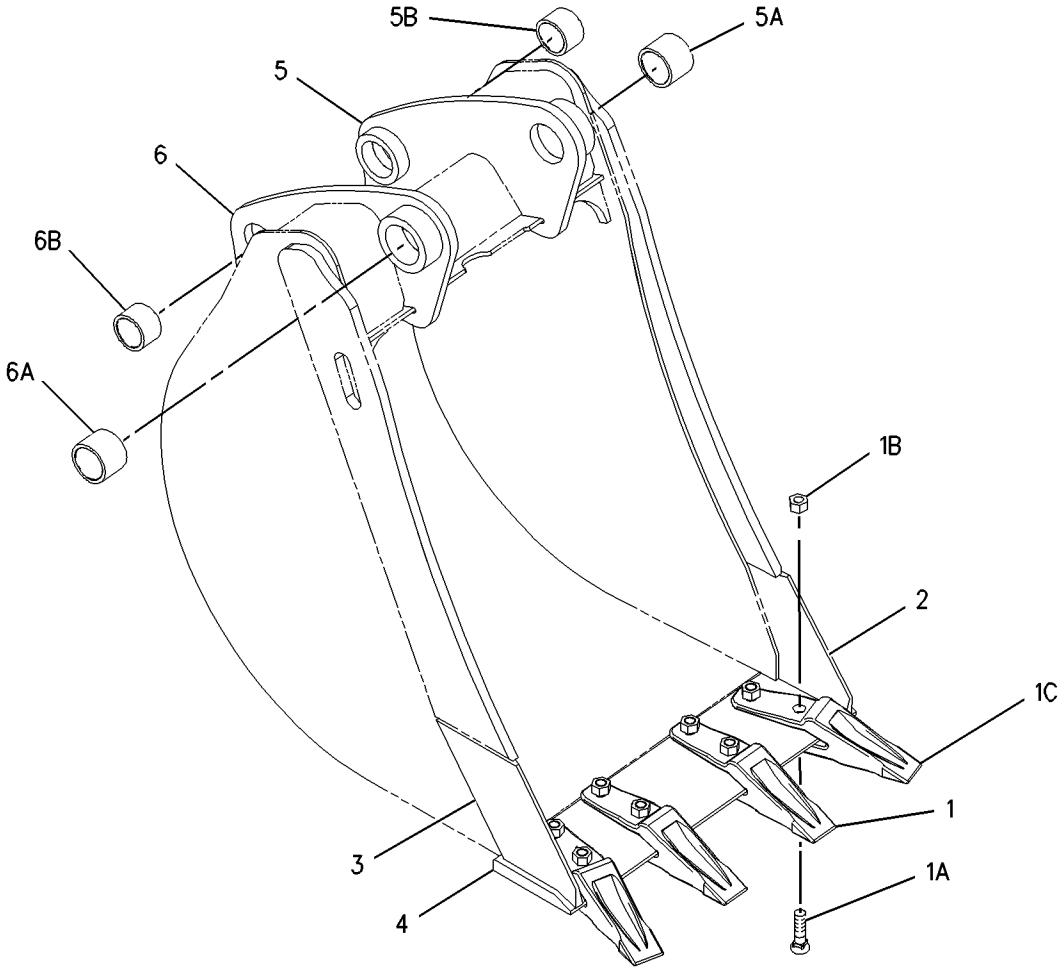


GRAPHIC #1 **<END>** g01002185

# WORK TOOLS

## *151-7889* BUCKET GP-HOE—HIGH CAPACITY

**S/N: BXC1-UP; DSX1-UP**
**(762MM) 30INCH**
**AN ATTACHMENT**

**SMCS-6503** **i02005096**

| NOTE | REF NO | GRAPHIC REF | PART NUMBER | QTY | PART NAME 1 2 3 4 5 6 (PRODUCT LEVEL) | SEE PAGE |
|---|---|---|---|---|---|---|
| C | 1 | 1 | *135-8206* | 5 | TOOTH GP-UNI | |
| | | | | | (EACH INCLUDES) | |
| C | 1A | 1 | **4F-3657** | 2 | BOLT-PLOW (5/8-11X2.75 IN) | |
| | 1B | 1 | **4K-0367** | 2 | NUT-FULL (5/8-11 THD) | |
| | 1C | 1 | **135-8203** | 2 | TOOTH-UNI | |
| | 2 | 1 | **9R-8987** | 1 | EDGE-LH | |
| | 3 | 1 | **9R-8988** | 1 | EDGE-RH | |
| | 4 | 1 | **131-2117** | 1 | EDGE | |
| | 5 | 1 | *151-7902* | 1 | BRACKET AS | |
| | 5A | 1 | **9R-0162** | 1 | BEARING | |
| | 5B | 1 | **168-0480** | 1 | BEARING-SLEEVE | |
| | 6 | 1 | *151-7903* | 1 | BRACKET AS | |
| | 6A | 1 | **9R-0162** | 1 | BEARING | |
| | 6B | 1 | **168-0480** | 1 | BEARING-SLEEVE | |

C-CHANGE FROM PREVIOUS TYPE

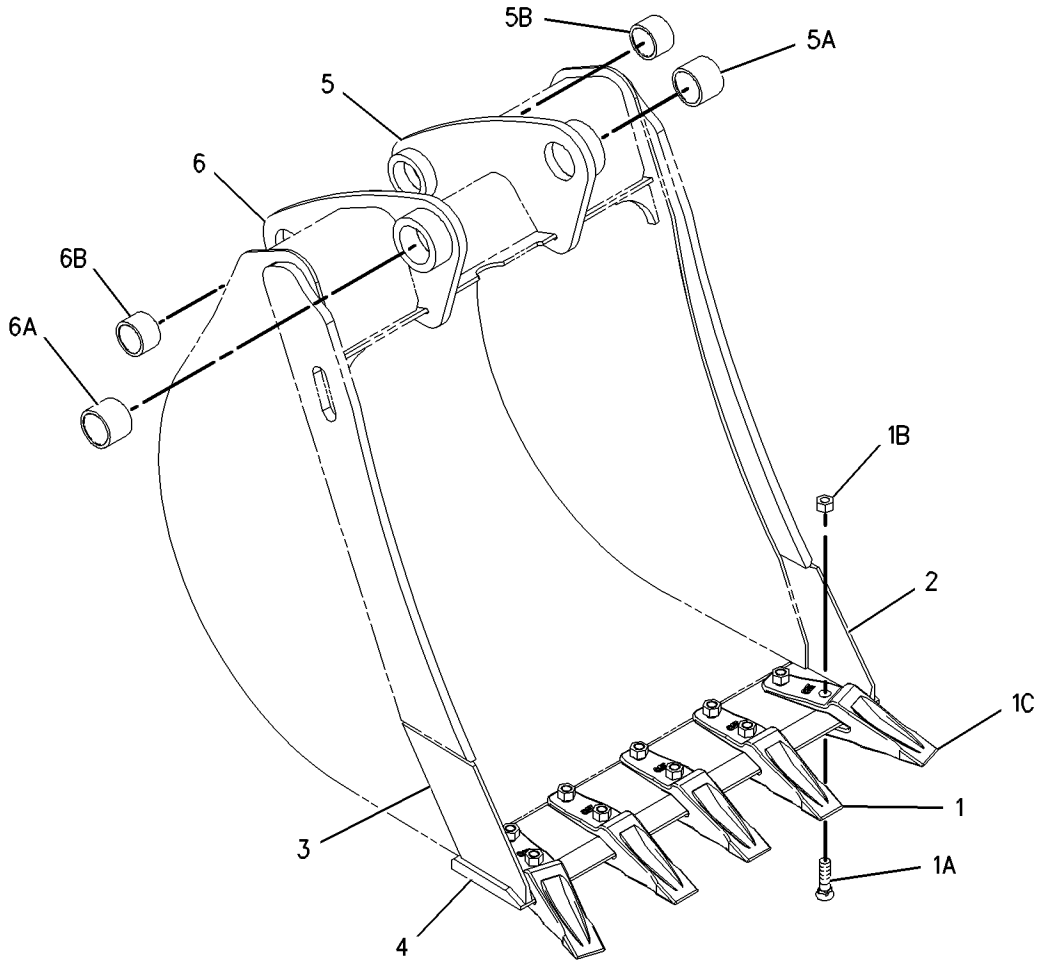


GRAPHIC #1 **<END>** g01002194

# WORK TOOLS

## *151-7890* BUCKET GP-HOE—HIGH CAPACITY

**S/N: BXC1-UP; DSX1-UP**
**(914MM) 36 INCH**
**AN ATTACHMENT**

**SMCS-6503** **i01953231**

| NOTE | REF NO | GRAPHIC REF | PART NUMBER | QTY | PART NAME 1 2 3 4 5 6 (PRODUCT LEVEL) | SEE PAGE |
|---|---|---|---|---|---|---|
| | 1 | 1 | *9W-1880* | 6 | TOOTH GP-UNI | |
| | | | | | (EACH INCLUDES) | |
| | 1A | 1 | **4F-3656** | 2 | BOLT-PLOW (5/8-11X2.5IN) | |
| | 1B | 1 | **4K-0367** | 2 | NUT-FULL (5/8-11 THD) | |
| | 1C | 1 | **135-8203** | 1 | TOOTH-UNI | |
| | 2 | 1 | **9R-8987** | 1 | EDGE-LH | |
| | 3 | 1 | **9R-8988** | 1 | EDGE-RH | |
| | 4 | 1 | **130-2057** | 1 | EDGE | |
| | 5 | 1 | *151-7902* | 1 | BRACKET AS-LH | |
| | 5A | 1 | **9R-0162** | 1 | BEARING | |
| | 5B | 1 | **168-0480** | 1 | BEARING-SLEEVE | |
| | 6 | 1 | *151-7903* | 1 | BRACKET AS-RH | |
| | 6A | 1 | **9R-0162** | 1 | BEARING | |
| | 6B | 1 | **168-0480** | 1 | BEARING-SLEEVE | |

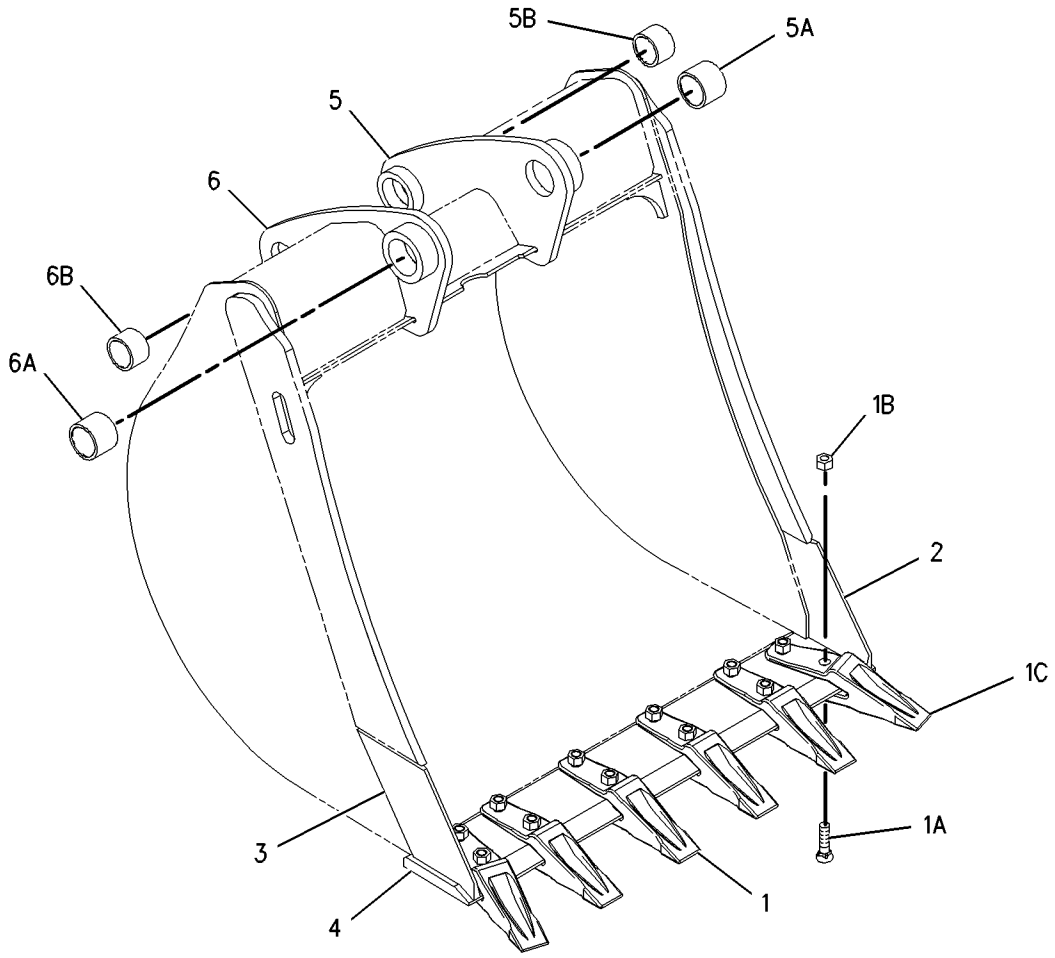


GRAPHIC #1 **<END>** g01002309

# WORK TOOLS

## *174-6362* BUCKET GP-HOE—STANDARD DUTY

**S/N: BXC1-UP; DSX1-UP**
**305MM (12 IN)**
**AN ATTACHMENT**

**SMCS-6503** **i01953228**

| NOTE | REF NO | GRAPHIC REF | PART NUMBER | QTY | PART NAME 1 2 3 4 5 6 (PRODUCT LEVEL) | SEE PAGE |
|---|---|---|---|---|---|---|
| | 1 | 1 | **9R-0158** | 5 | WASHER (46X69X3MM THK) | |
| | 2 | 1 | **9R-1510** | 3 | WASHER (51X82X4MM THK) | |
| Y | 3 | 1 | **151-7866** | 1 | BUCKET GP-HOE | 625 |
| | 4 | 1 | **168-0443** | 1 | PIN | |
| | 5 | 1 | **168-0444** | 1 | PIN | |
| | 6 | 1 | **6V-3213** | 2 | RING-RETAINING | |
| | 7 | 1 | **6V-4364** | 2 | RING-RETAINING | |

Y-SEPARATE ILLUSTRATION

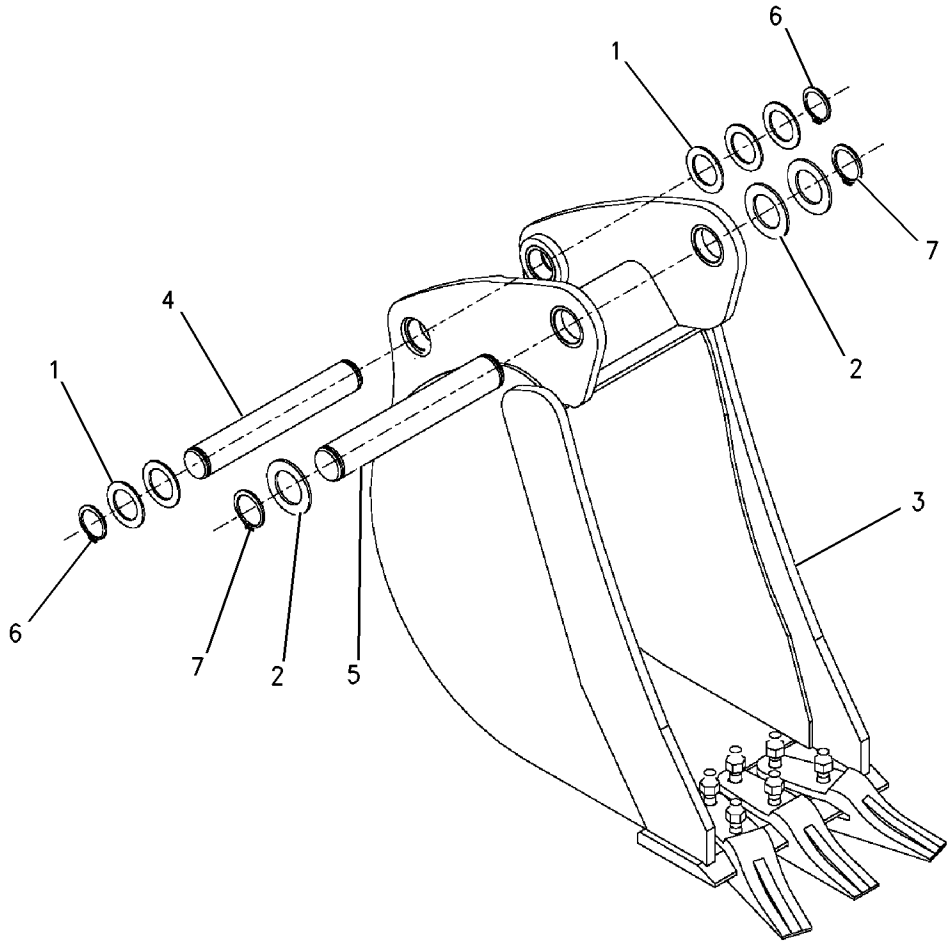


GRAPHIC #1 **<END>** g00713100

# WORK TOOLS

## *174-6365* BUCKET GP-HOE—HEAVY DUTY

**S/N: BXC1-UP; DSX1-UP**
**305MM (12 IN)**
**AN ATTACHMENT**

**SMCS-6503** **i01953226**

| NOTE | REF NO | GRAPHIC REF | PART NUMBER | QTY | PART NAME 1 2 3 4 5 6 (PRODUCT LEVEL) | SEE PAGE |
|---|---|---|---|---|---|---|
| | 1 | 1 | **9R-0158** | 5 | WASHER (46X69X3MM THK) | |
| | 2 | 1 | **9R-1510** | 3 | WASHER (51X82X4MM THK) | |
| Y | 3 | 1 | **151-7877** | 1 | BUCKET GP-HOE | 630 |
| | 4 | 1 | **168-0443** | 1 | PIN | |
| | 5 | 1 | **168-0444** | 1 | PIN | |
| | 6 | 1 | **6V-3213** | 2 | RING-RETAINING | |
| | 7 | 1 | **6V-4364** | 2 | RING-RETAINING | |

Y-SEPARATE ILLUSTRATION

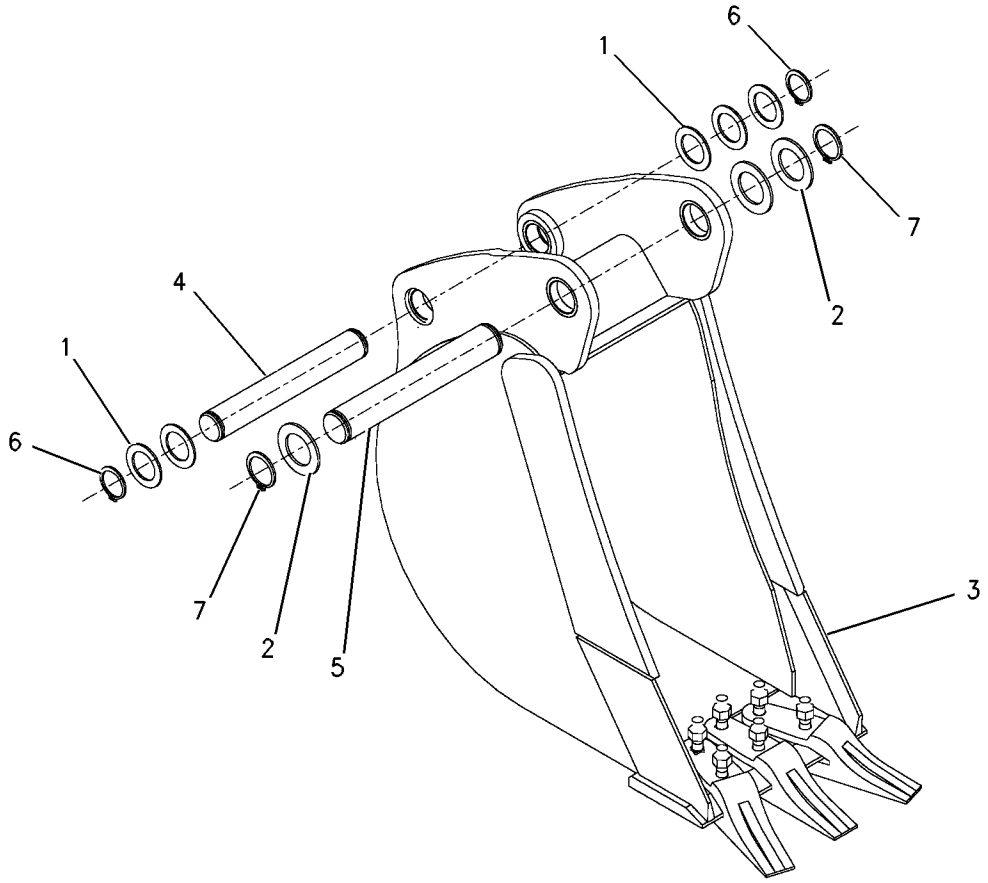


GRAPHIC #1 **<END>** g00713078

# WORK TOOLS

## 199-5970 BUCKET GP-HOE—HEAVY DUTY

**S/N: BXC1-UP; DSX1-UP**
**305MM (12 IN)**
**PART OF 199-5971 BUCKET GP-HOE**
**AN ATTACHMENT**

**SMCS-6503** **i02005659**

| NOTE | REF NO | GRAPHIC REF | PART NUMBER | QTY | PART NAME 1 2 3 4 5 6 (PRODUCT LEVEL) | SEE PAGE |
|---|---|---|---|---|---|---|
| | 1 | 1 | *135-8206* | 3 | TOOTH GP-UNI | |
| | | | | | (EACH INCLUDES) | |
| | 1A | 1 | **4F-3656** | 2 | BOLT-PLOW (5/8-11X2.5IN) | |
| | 1B | 1 | **4K-0367** | 2 | NUT-FULL (5/8-11 THD) | |
| | 1C | 1 | **135-8203** | 1 | TOOTH-UNI | |
| | 2 | 1 | **124-4913** | 1 | EDGE (RH) | |
| | 3 | 1 | **128-7749** | 1 | EDGE (LH) | |
| | 4 | 1 | **151-7927** | 2 | PLATE | |
| | 5 | 1 | **154-5255** | 1 | EDGE | |
| | 6 | 1 | *151-7929* | 1 | BRACKET AS | |
| | 6A | 1 | **9R-0320** | 1 | BEARING | |
| | 6B | 1 | **154-5257** | 1 | BEARING | |
| | 7 | 1 | *151-7930* | 1 | BRACKET AS | |
| | 7A | 1 | **9R-0320** | 1 | BEARING | |
| | 7B | 1 | **154-5257** | 1 | BEARING | |

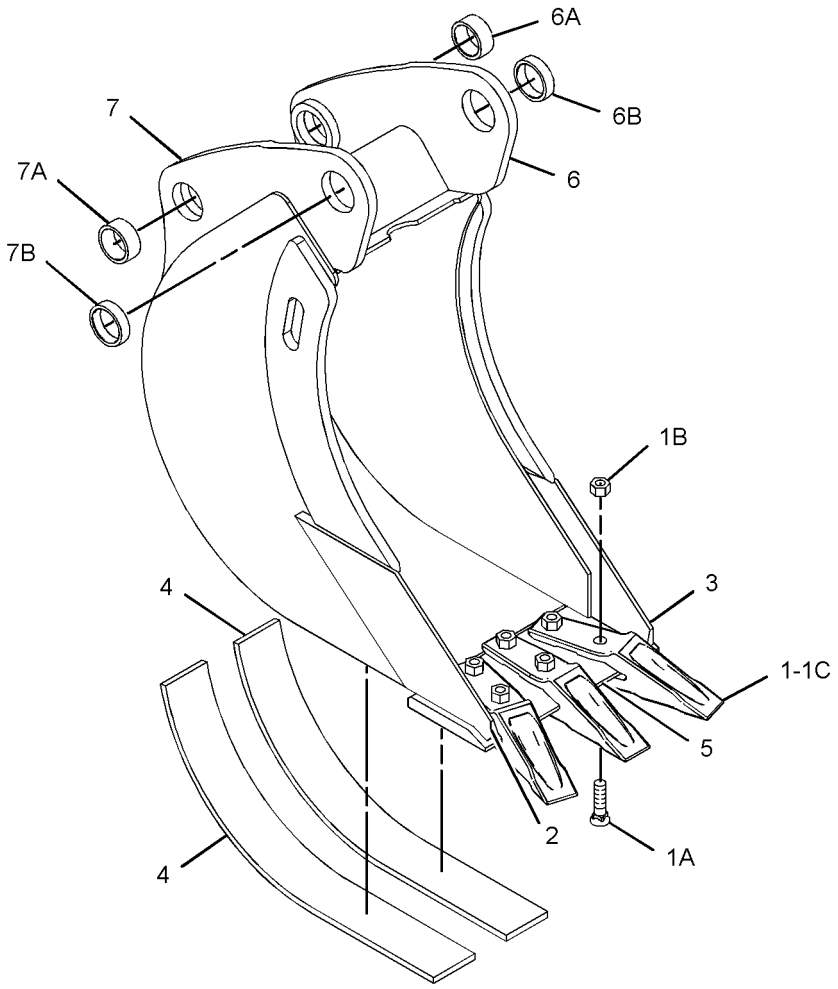


GRAPHIC #1 **<END>** g01017205

# WORK TOOLS

## 199-5971 BUCKET GP-HOE—HEAVY DUTY

**S/N: BXC1-UP; DSX1-UP**
**305MM (12IN)**
**AN ATTACHMENT**

**SMCS-6503** **i01431550**

| NOTE | REF NO | GRAPHIC REF | PART NUMBER | QTY | PART NAME 1 2 3 4 5 6 (PRODUCT LEVEL) | SEE PAGE |
|---|---|---|---|---|---|---|
| | 1 | 1 | **6V-3213** | 2 | RING-RETAINING | |
| | 2 | 1 | **6V-4364** | 2 | RING-RETAINING | |
| | 3 | 1 | **9R-0158** | 5 | WASHER (3MM THK) | |
| | 4 | 1 | **9R-1510** | 3 | WASHER (4MM THK) | |
| | 5 | 1 | **168-0443** | 1 | PIN | |
| | 6 | 1 | **168-0444** | 1 | PIN | |
| Y | 7 | 1 | **199-5970** | 1 | BUCKET GP-HOE | 641 |

Y-SEPARATE ILLUSTRATION

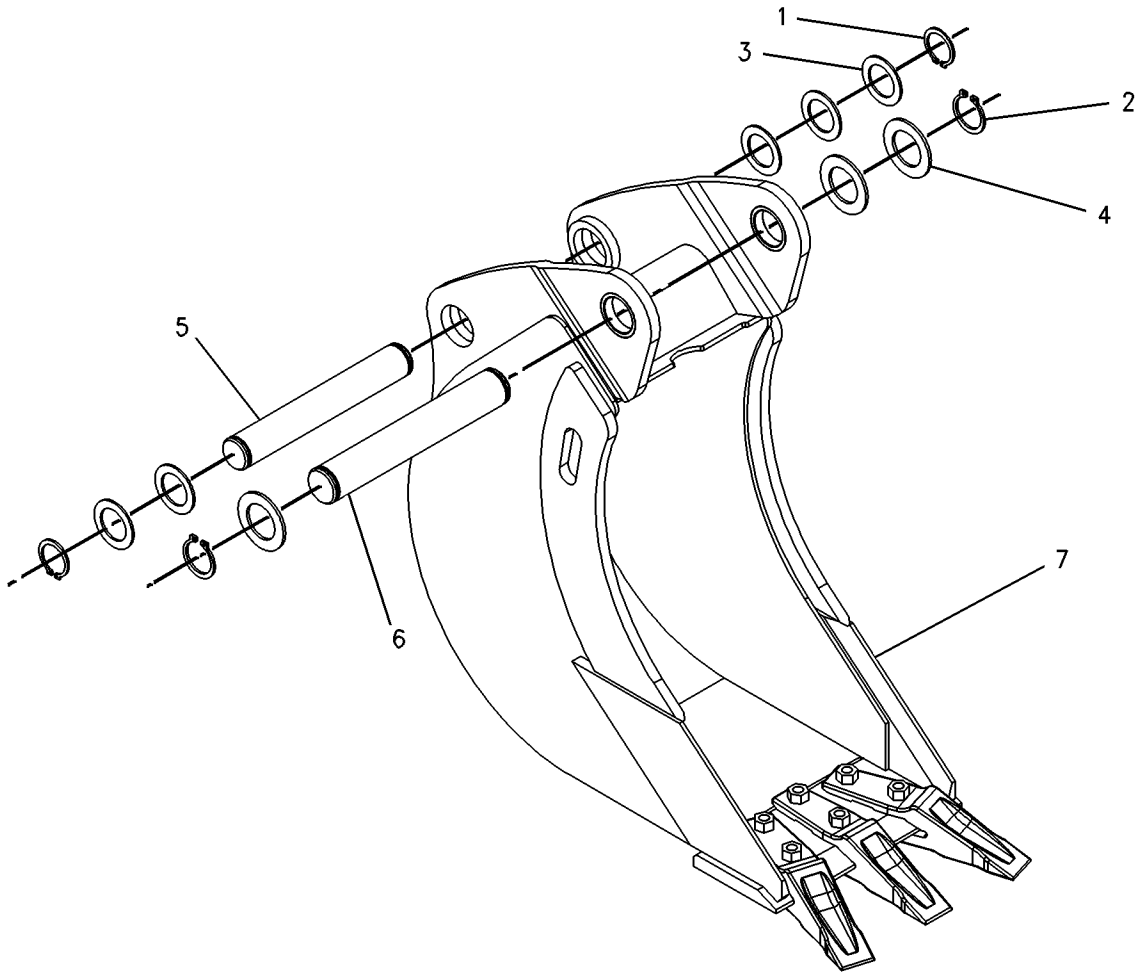


GRAPHIC #1 **<END>** g00750627

# WORK TOOLS

## *219-3379* BUCKET GP-HOE—STANDARD DUTY

**S/N: BXC1-UP; DSX1-UP**
**305MM (12 IN)**
**PART OF 219-3410 BUCKET GP-HOE**
**AN ATTACHMENT**

**SMCS-6503** **i01941824**

| NOTE | REF NO | GRAPHIC REF | PART NUMBER | QTY | PART NAME 1 2 3 4 5 6 (PRODUCT LEVEL) | SEE PAGE |
|---|---|---|---|---|---|---|
| | 1 | 1 | *208-5245* | 3 | TIP GP-PENETRATION | |
| | | | | | (EACH INCLUDES) | |
| | 1A | 1 | **201-1238** | 1 | PIN | |
| | 1B | 1 | **201-1239** | 1 | RETAINER AS | |
| | 1C | 1 | **208-5235** | 1 | TIP-PENETRATION | |
| | 2 | 1 | *151-7929* | 1 | BRACKET AS-LH | |
| | 2A | 1 | **9R-0320** | 1 | BEARING | |
| | 2B | 1 | **154-5257** | 1 | BEARING | |
| | 3 | 1 | *151-7930* | 1 | BRACKET AS-RH | |
| | 3A | 1 | **9R-0320** | 1 | BEARING | |
| | 3B | 1 | **154-5257** | 1 | BEARING | |

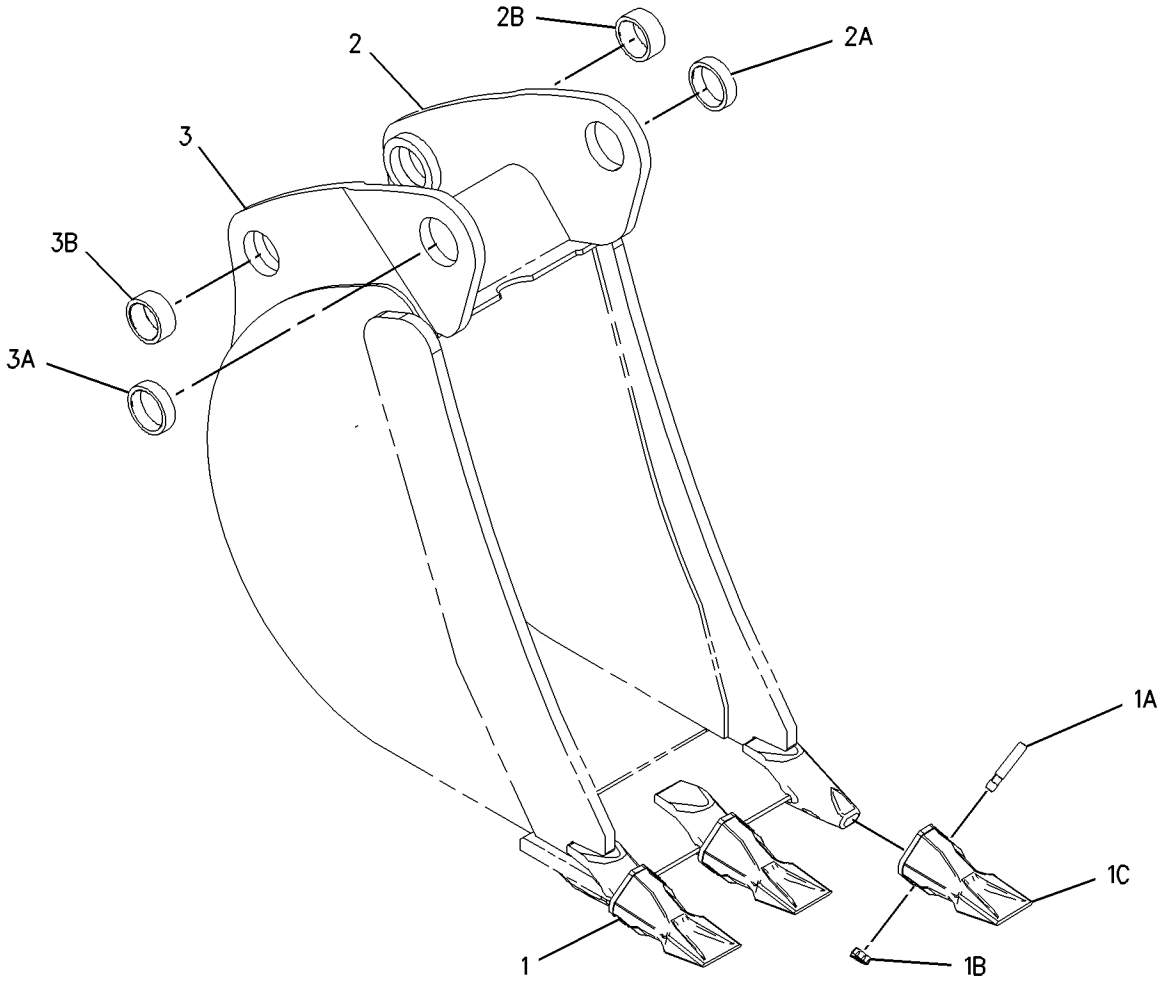


GRAPHIC #1 **<END>** g01001647

# WORK TOOLS

## 219-3380 BUCKET GP-HOE—STANDARD DUTY

**S/N: BXC1-UP; DSX1-UP**
**458MM (18 IN)**
**AN ATTACHMENT**

**SMCS-6503** **i01941827**

| NOTE | REF NO | GRAPHIC REF | PART NUMBER | QTY | PART NAME 1 2 3 4 5 6 (PRODUCT LEVEL) | SEE PAGE |
|---|---|---|---|---|---|---|
| | 1 | 1 | *208-5245* | 4 | TIP GP-PENETRATION | |
| | | | | | (EACH INCLUDES) | |
| | 1A | 1 | **201-1238** | 1 | PIN | |
| | 1B | 1 | **201-1239** | 1 | RETAINER AS | |
| | 1C | 1 | **208-5235** | 1 | TIP-PENETRATION | |
| | 2 | 1 | *151-7902* | 1 | BRACKET AS-LH | |
| | 2A | 1 | **9R-0162** | 1 | BEARING | |
| | 2B | 1 | **168-0480** | 1 | BEARING-SLEEVE | |
| | 3 | 1 | *151-7903* | 1 | BRACKET AS-RH | |
| | 3A | 1 | **9R-0162** | 1 | BEARING | |
| | 3B | 1 | **168-0480** | 1 | BEARING-SLEEVE | |

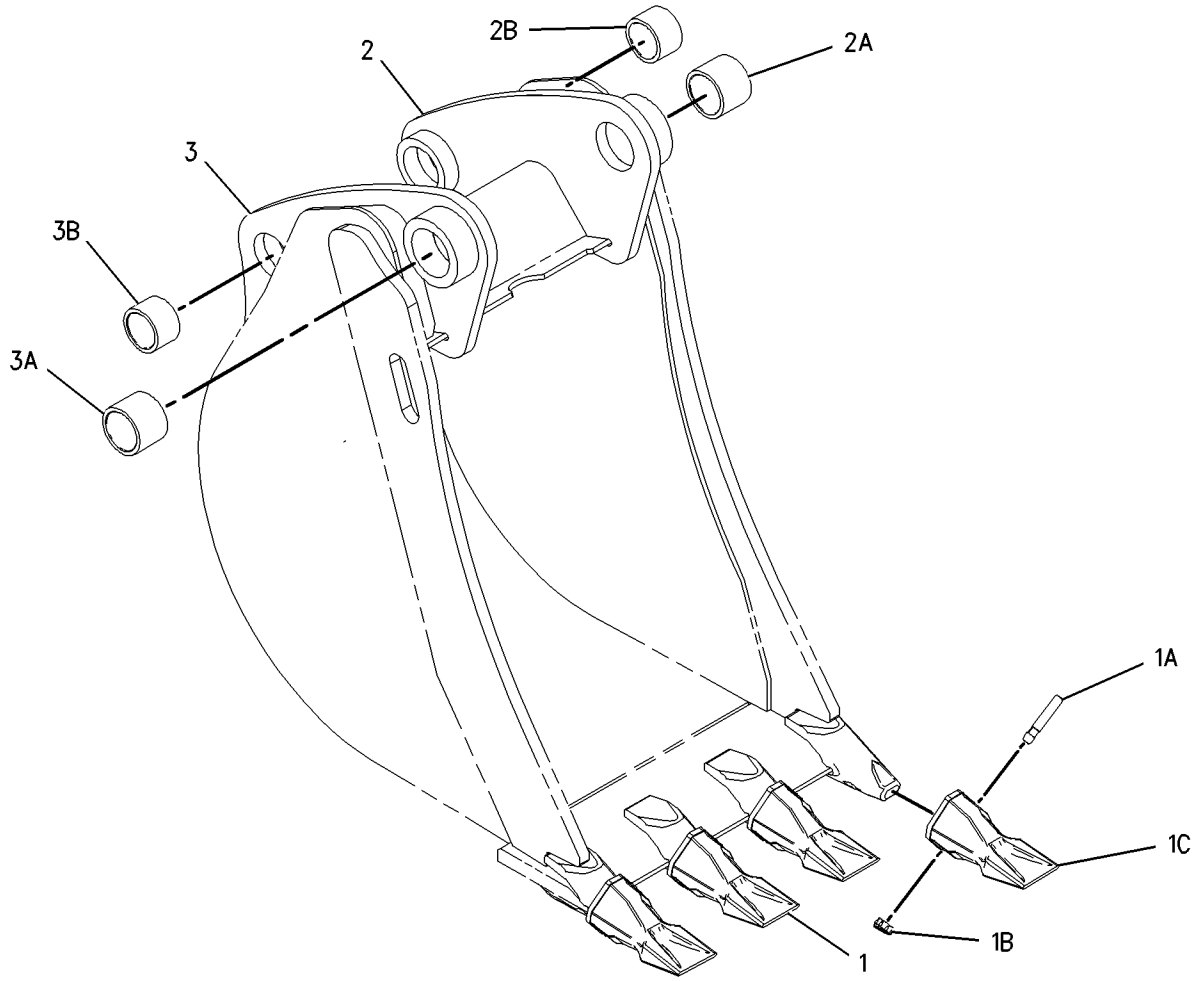


GRAPHIC #1 **<END>** g01001636

# WORK TOOLS

## 219-3381 BUCKET GP-HOE—STANDARD DUTY

**S/N: BXC1-UP; DSX1-UP**
**610MM (24 IN)**
**AN ATTACHMENT**

**SMCS-6503** **i01941828**

| NOTE | REF NO | GRAPHIC REF | PART NUMBER | QTY | PART NAME 1 2 3 4 5 6 (PRODUCT LEVEL) | SEE PAGE |
|---|---|---|---|---|---|---|
| | 1 | 1 | *208-5245* | 5 | TIP GP-PENETRATION | |
| | | | | | (EACH INCLUDES) | |
| | 1A | 1 | **201-1238** | 1 | PIN | |
| | 1B | 1 | **201-1239** | 1 | RETAINER AS | |
| | 1C | 1 | **208-5235** | 1 | TIP-PENETRATION | |
| | 2 | 1 | *151-7902* | 1 | BRACKET AS-LH | |
| | 2A | 1 | **9R-0162** | 1 | BEARING | |
| | 2B | 1 | **168-0480** | 1 | BEARING-SLEEVE | |
| | 3 | 1 | *151-7903* | 1 | BRACKET AS-RH | |
| | 3A | 1 | **9R-0162** | 1 | BEARING | |
| | 3B | 1 | **168-0480** | 1 | BEARING-SLEEVE | |

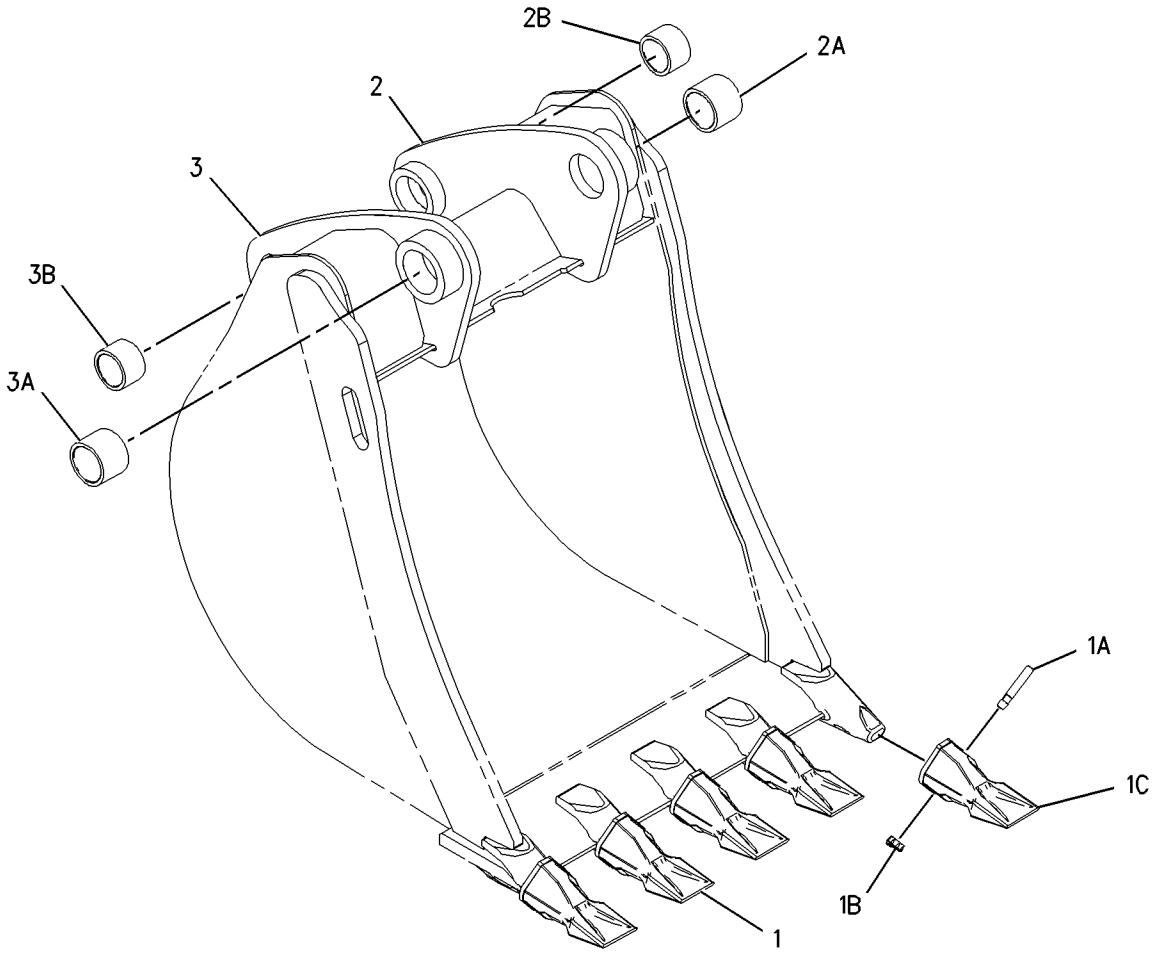


GRAPHIC #1 **<END>** g01001619

# WORK TOOLS

## 219-3382 BUCKET GP-HOE—STANDARD DUTY

**S/N: BXC1-UP; DSX1-UP**
**762MM (30 IN)**
**AN ATTACHMENT**

**SMCS-6503** **i01941829**

| NOTE | REF NO | GRAPHIC REF | PART NUMBER | QTY | PART NAME 1 2 3 4 5 6 (PRODUCT LEVEL) | SEE PAGE |
|---|---|---|---|---|---|---|
| | 1 | 1 | *208-5245* | 5 | TIP GP-PENETRATION | |
| | | | | | (EACH INCLUDES) | |
| | 1A | 1 | **201-1238** | 1 | PIN | |
| | 1B | 1 | **201-1239** | 1 | RETAINER AS | |
| | 1C | 1 | **208-5235** | 1 | TIP-PENETRATION | |
| | 2 | 1 | *151-7902* | 1 | BRACKET AS-LH | |
| | 2A | 1 | **9R-0162** | 1 | BEARING | |
| | 2B | 1 | **168-0480** | 1 | BEARING-SLEEVE | |
| | 3 | 1 | *151-7903* | 1 | BRACKET AS-RH | |
| | 3A | 1 | **9R-0162** | 1 | BEARING | |
| | 3B | 1 | **168-0480** | 1 | BEARING-SLEEVE | |

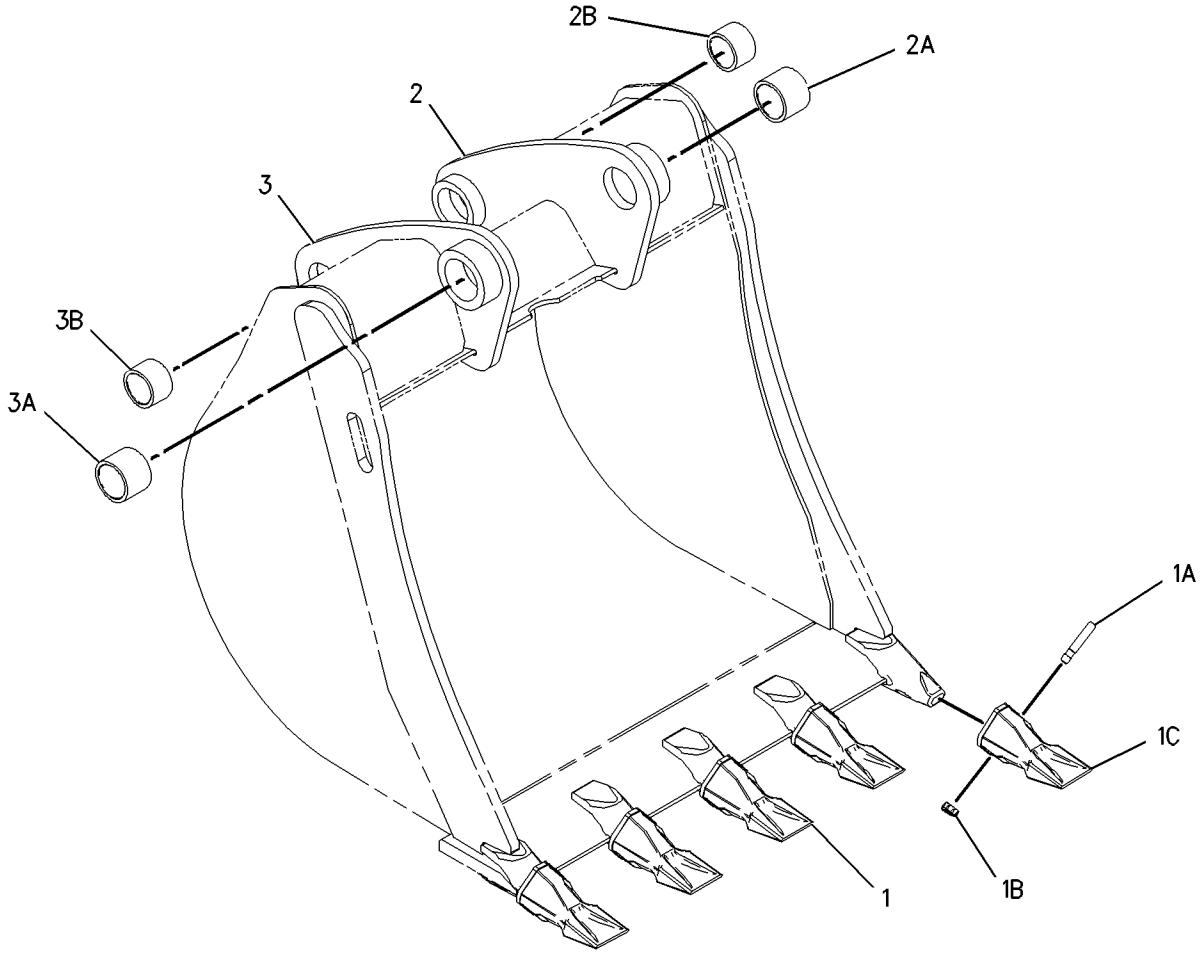


GRAPHIC #1 **<END>** g01001590

# WORK TOOLS

## 219-3383 BUCKET GP-HOE—STANDARD DUTY

**S/N: BXC1-UP; DSX1-UP**
**914MM (36 IN)**
**AN ATTACHMENT**

**SMCS-6503** **i01941833**

| NOTE | REF NO | GRAPHIC REF | PART NUMBER | QTY | PART NAME 1 2 3 4 5 6 (PRODUCT LEVEL) | SEE PAGE |
|---|---|---|---|---|---|---|
| | 1 | 1 | *208-5245* | 6 | TIP GP-PENETRATION | |
| | | | | | (EACH INCLUDES) | |
| | 1A | 1 | **201-1238** | 1 | PIN | |
| | 1B | 1 | **201-1239** | 1 | RETAINER AS | |
| | 1C | 1 | **208-5235** | 1 | TIP-PENETRATION | |
| | 2 | 1 | *151-7902* | 1 | BRACKET AS-LH | |
| | 2A | 1 | **9R-0162** | 1 | BEARING | |
| | 2B | 1 | **168-0480** | 1 | BEARING-SLEEVE | |
| | 3 | 1 | *151-7903* | 1 | BRACKET AS-RH | |
| | 3A | 1 | **9R-0162** | 1 | BEARING | |
| | 3B | 1 | **168-0480** | 1 | BEARING-SLEEVE | |

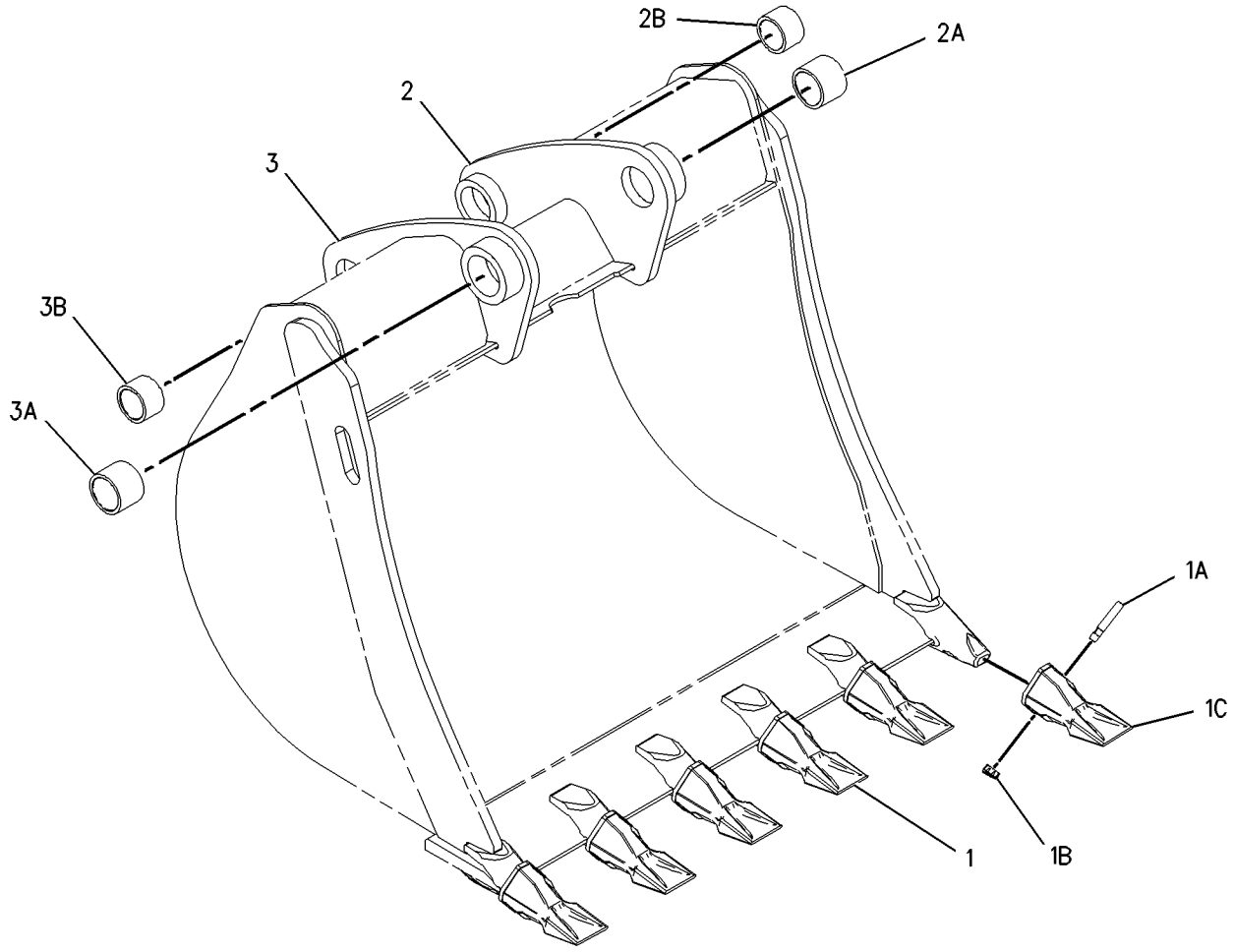


GRAPHIC #1 **<END>** g01001601

# WORK TOOLS

## 219-3384 BUCKET GP-HOE—HEAVY DUTY

**S/N: BXC1-UP; DSX1-UP**
**305MM (12 IN)**
**PART OF 219-3411 BUCKET GP-HOE**
**AN ATTACHMENT**

**SMCS-6503** **i01941834**

| NOTE | REF NO | GRAPHIC REF | PART NUMBER | QTY | PART NAME 1 2 3 4 5 6 (PRODUCT LEVEL) | SEE PAGE |
|---|---|---|---|---|---|---|
| | 1 | 1 | *208-5245* | 3 | TIP GP-PENETRATION | |
| | | | | | (EACH INCLUDES) | |
| | 1A | 1 | **201-1238** | 1 | PIN | |
| | 1B | 1 | **201-1239** | 1 | RETAINER AS | |
| | 1C | 1 | **208-5235** | 1 | TIP-PENETRATION | |
| | 2 | 1 | *151-7929* | 1 | BRACKET AS-LH | |
| | 2A | 1 | **9R-0320** | 1 | BEARING | |
| | 2B | 1 | **154-5257** | 1 | BEARING | |
| | 3 | 1 | *151-7930* | 1 | BRACKET AS-RH | |
| | 3A | 1 | **9R-0320** | 1 | BEARING | |
| | 3B | 1 | **154-5257** | 1 | BEARING | |

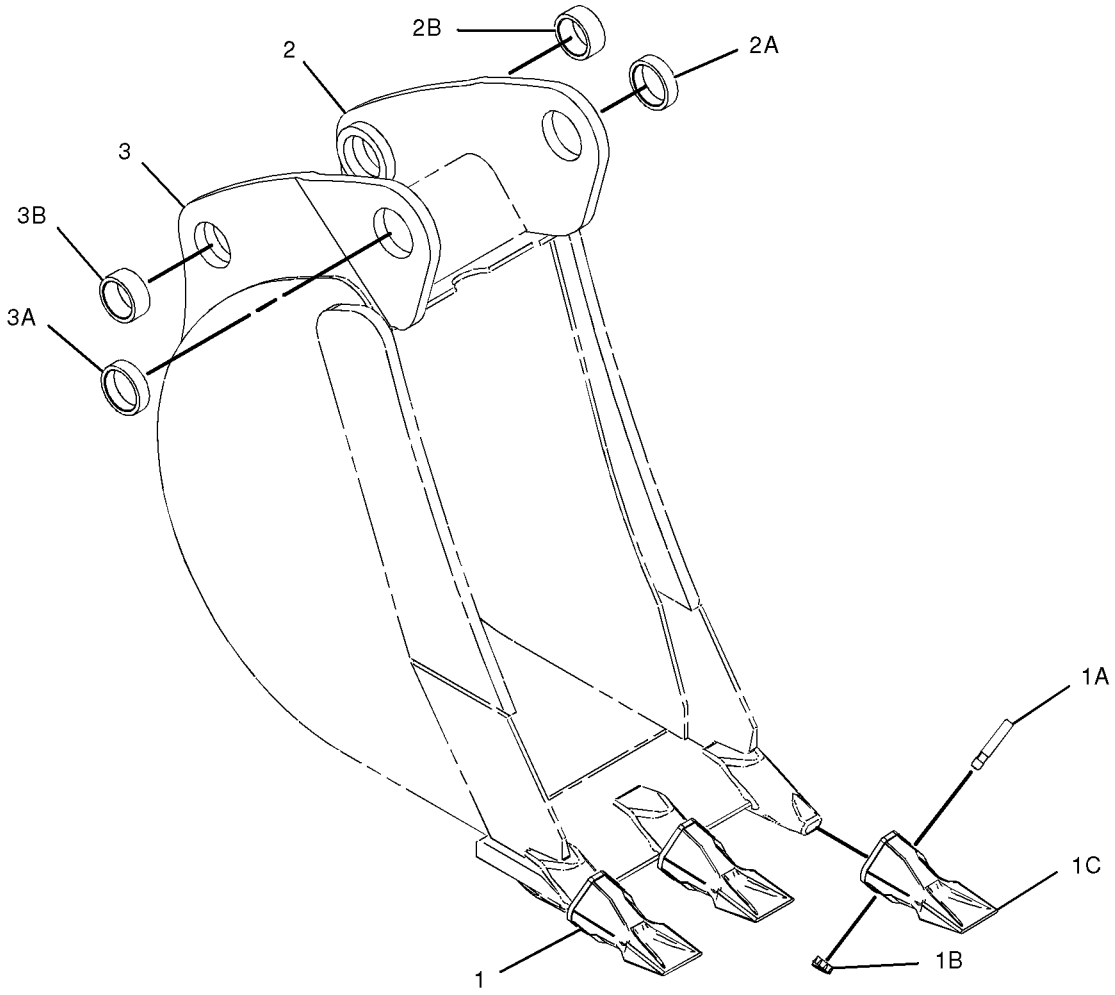


GRAPHIC #1 **<END>** g01011317

# WORK TOOLS

## 219-3385 BUCKET GP-HOE—HEAVY DUTY

**S/N: BXC1-UP; DSX1-UP**
**407MM (16 IN)**
**AN ATTACHMENT**

**SMCS-6503** **i01941835**

| NOTE | REF NO | GRAPHIC REF | PART NUMBER | QTY | PART NAME 1 2 3 4 5 6 (PRODUCT LEVEL) | SEE PAGE |
|---|---|---|---|---|---|---|
| | 1 | 1 | *208-5245* | 3 | TIP GP-PENETRATION | |
| | | | | | (EACH INCLUDES) | |
| | 1A | 1 | **201-1238** | 1 | PIN | |
| | 1B | 1 | **201-1239** | 1 | RETAINER AS | |
| | 1C | 1 | **208-5235** | 1 | TIP-PENETRATION | |
| | 2 | 1 | *151-7902* | 1 | BRACKET AS-LH | |
| | 2A | 1 | **9R-0162** | 1 | BEARING | |
| | 2B | 1 | **168-0480** | 1 | BEARING-SLEEVE | |
| | 3 | 1 | *151-7903* | 1 | BRACKET AS-RH | |
| | 3A | 1 | **9R-0162** | 1 | BEARING | |
| | 3B | 1 | **168-0480** | 1 | BEARING-SLEEVE | |

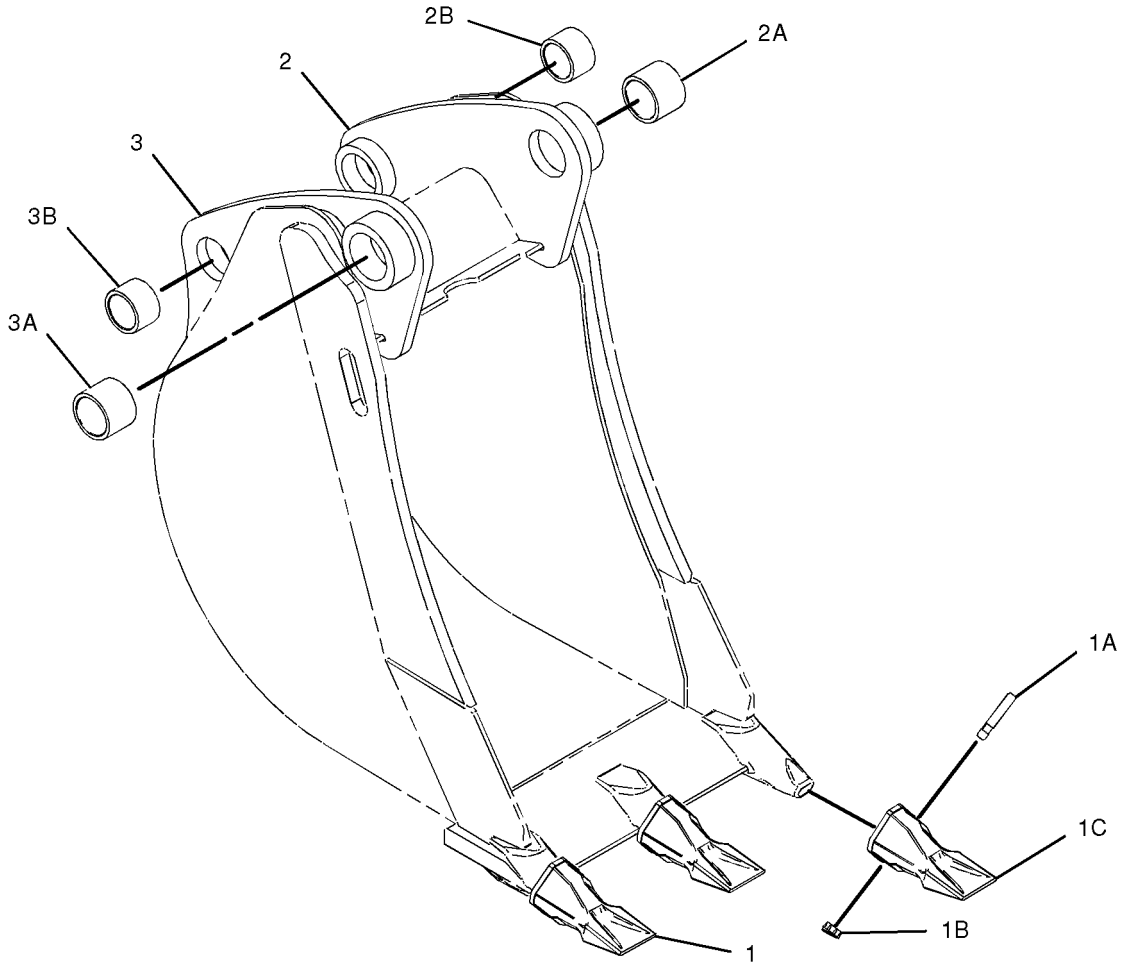


GRAPHIC #1 **<END>** g01011326

# WORK TOOLS

## 219-3386 BUCKET GP-HOE—HEAVY DUTY

**S/N: BXC1-UP; DSX1-UP**
**458MM (18 IN)**
**AN ATTACHMENT**

**SMCS-6503** **i01941838**

| NOTE | REF NO | GRAPHIC REF | PART NUMBER | QTY | PART NAME 1 2 3 4 5 6 (PRODUCT LEVEL) | SEE PAGE |
|---|---|---|---|---|---|---|
| | 1 | 1 | *208-5245* | 4 | TIP GP-PENETRATION | |
| | | | | | (EACH INCLUDES) | |
| | 1A | 1 | **201-1238** | 1 | PIN | |
| | 1B | 1 | **201-1239** | 1 | RETAINER AS | |
| | 1C | 1 | **208-5235** | 1 | TIP-PENETRATION | |
| | 2 | 1 | *151-7902* | 1 | BRACKET AS-LH | |
| | 2A | 1 | **9R-0162** | 1 | BEARING | |
| | 2B | 1 | **168-0480** | 1 | BEARING-SLEEVE | |
| | 3 | 1 | *151-7903* | 1 | BRACKET AS-RH | |
| | 3A | 1 | **9R-0162** | 1 | BEARING | |
| | 3B | 1 | **168-0480** | 1 | BEARING-SLEEVE | |

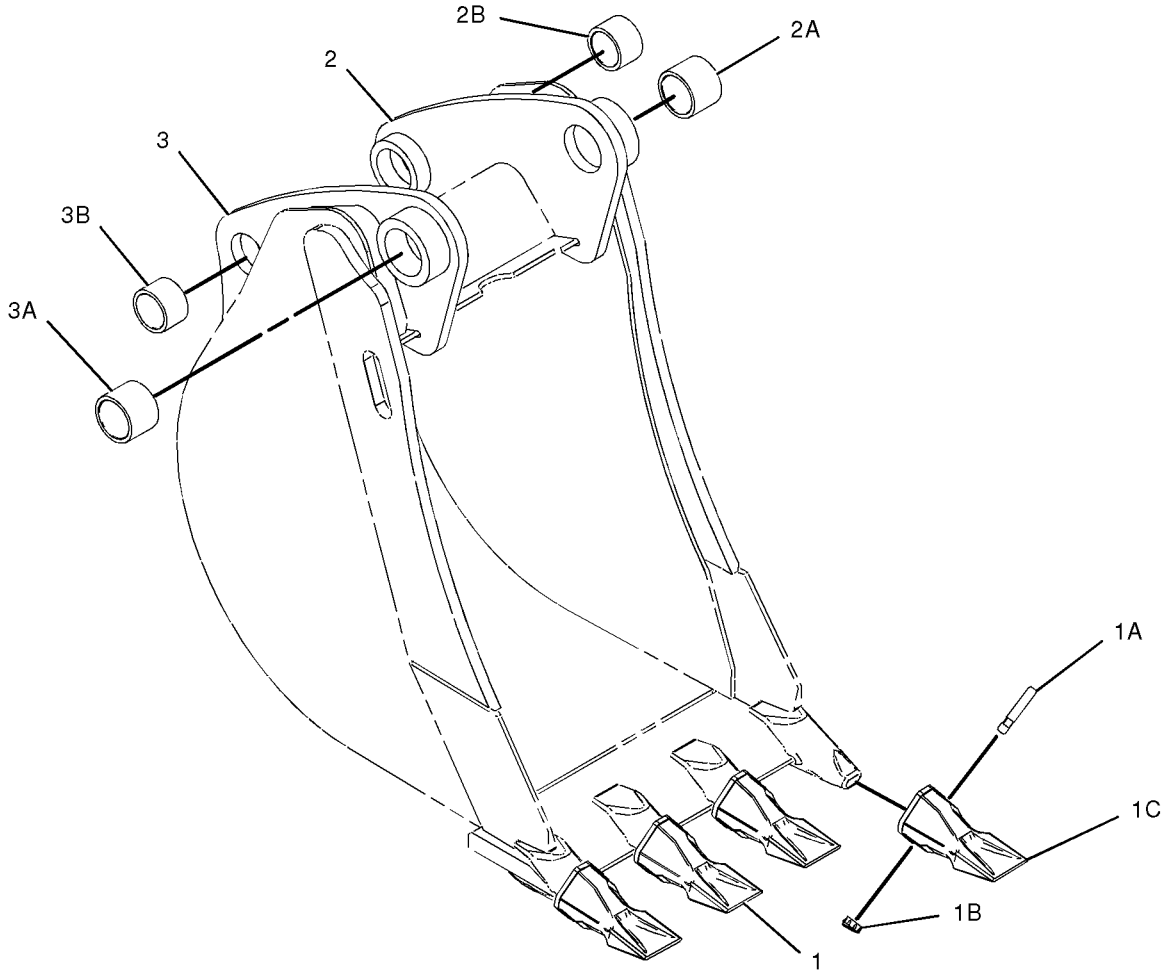


GRAPHIC #1 **<END>** g01011354

# WORK TOOLS

## 219-3387 BUCKET GP-HOE—HEAVY DUTY

**S/N: BXC1-UP; DSX1-UP**
**610MM (24 IN)**
**AN ATTACHMENT**

**SMCS-6503** **i01941942**

| NOTE | REF NO | GRAPHIC REF | PART NUMBER | QTY | PART NAME 1 2 3 4 5 6 (PRODUCT LEVEL) | SEE PAGE |
|---|---|---|---|---|---|---|
| | 1 | 1 | *208-5245* | 5 | TIP GP-PENETRATION | |
| | | | | | (EACH INCLUDES) | |
| | 1A | 1 | **201-1238** | 1 | PIN | |
| | 1B | 1 | **201-1239** | 1 | RETAINER AS | |
| | 1C | 1 | **208-5235** | 1 | TIP-PENETRATION | |
| | 2 | 1 | *151-7902* | 1 | BRACKET AS-LH | |
| | 2A | 1 | **9R-0162** | 1 | BEARING | |
| | 2B | 1 | **168-0480** | 1 | BEARING-SLEEVE | |
| | 3 | 1 | *151-7903* | 1 | BRACKET AS-RH | |
| | 3A | 1 | **9R-0162** | 1 | BEARING | |
| | 3B | 1 | **168-0480** | 1 | BEARING-SLEEVE | |

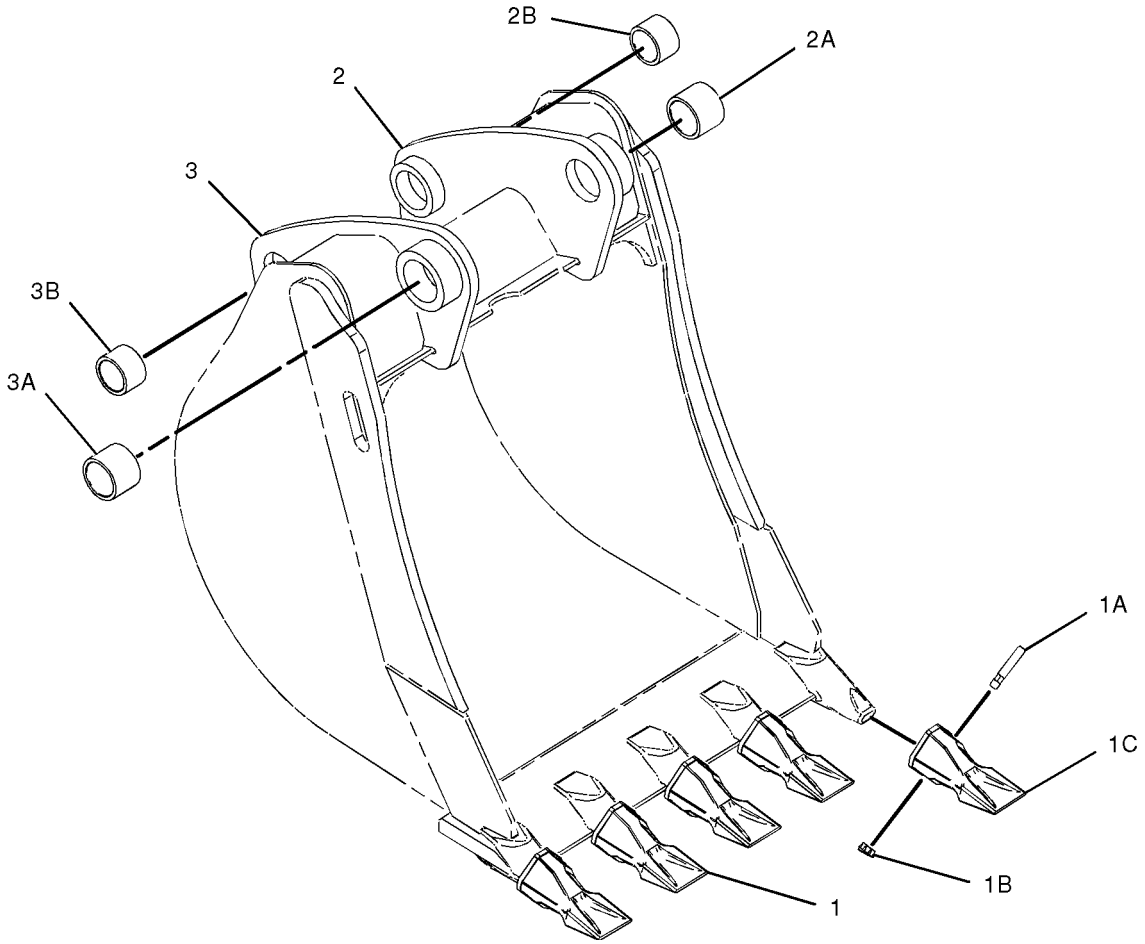


GRAPHIC #1 **<END>** g01011361

# WORK TOOLS

## 219-3388 BUCKET GP-HOE—HEAVY DUTY

**S/N: BXC1-UP; DSX1-UP**
**762MM (30 IN)**
**AN ATTACHMENT**

**SMCS-6503** **i01941958**

| NOTE | REF NO | GRAPHIC REF | PART NUMBER | QTY | PART NAME 1 2 3 4 5 6 (PRODUCT LEVEL) | SEE PAGE |
|---|---|---|---|---|---|---|
| | 1 | 1 | *208-5245* | 6 | TIP GP-PENETRATION | |
| | | | | | (EACH INCLUDES) | |
| | 1A | 1 | **201-1238** | 1 | PIN | |
| | 1B | 1 | **201-1239** | 1 | RETAINER AS | |
| | 1C | 1 | **208-5235** | 1 | TIP-PENETRATION | |
| | 2 | 1 | *151-7902* | 1 | BRACKET AS-LH | |
| | 2A | 1 | **9R-0162** | 1 | BEARING | |
| | 2B | 1 | **168-0480** | 1 | BEARING-SLEEVE | |
| | 3 | 1 | *151-7903* | 1 | BRACKET AS-RH | |
| | 3A | 1 | **9R-0162** | 1 | BEARING | |
| | 3B | 1 | **168-0480** | 1 | BEARING-SLEEVE | |

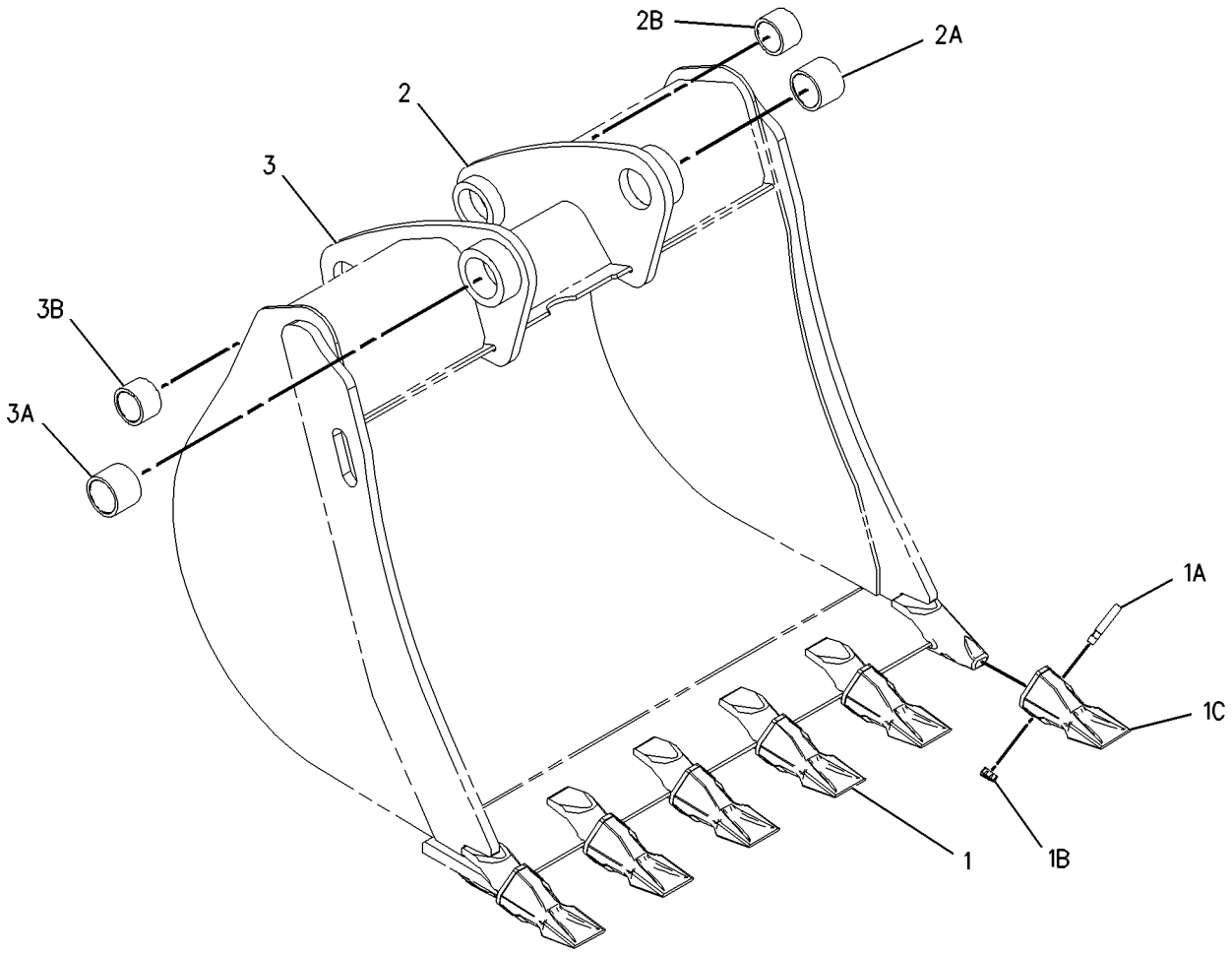


GRAPHIC #1 **<END>** g01001601

# WORK TOOLS

## 219-3389 BUCKET GP-HOE—HEAVY DUTY

**S/N: BXC1-UP; DSX1-UP**
**914MM (36 IN)**
**AN ATTACHMENT**

**SMCS-6503** **i01941960**

| NOTE | REF NO | GRAPHIC REF | PART NUMBER | QTY | PART NAME 1 2 3 4 5 6 (PRODUCT LEVEL) | SEE PAGE |
|---|---|---|---|---|---|---|
| | 1 | 1 | *208-5245* | 6 | TIP GP-PENETRATION | |
| | | | | | (EACH INCLUDES) | |
| | 1A | 1 | **201-1238** | 1 | PIN | |
| | 1B | 1 | **201-1239** | 1 | RETAINER AS | |
| | 1C | 1 | **208-5235** | 1 | TIP-PENETRATION | |
| | 2 | 1 | *151-7902* | 1 | BRACKET AS-LH | |
| | 2A | 1 | **9R-0162** | 1 | BEARING | |
| | 2B | 1 | **168-0480** | 1 | BEARING-SLEEVE | |
| | 3 | 1 | *151-7903* | 1 | BRACKET AS-RH | |
| | 3A | 1 | **9R-0162** | 1 | BEARING | |
| | 3B | 1 | **168-0480** | 1 | BEARING-SLEEVE | |

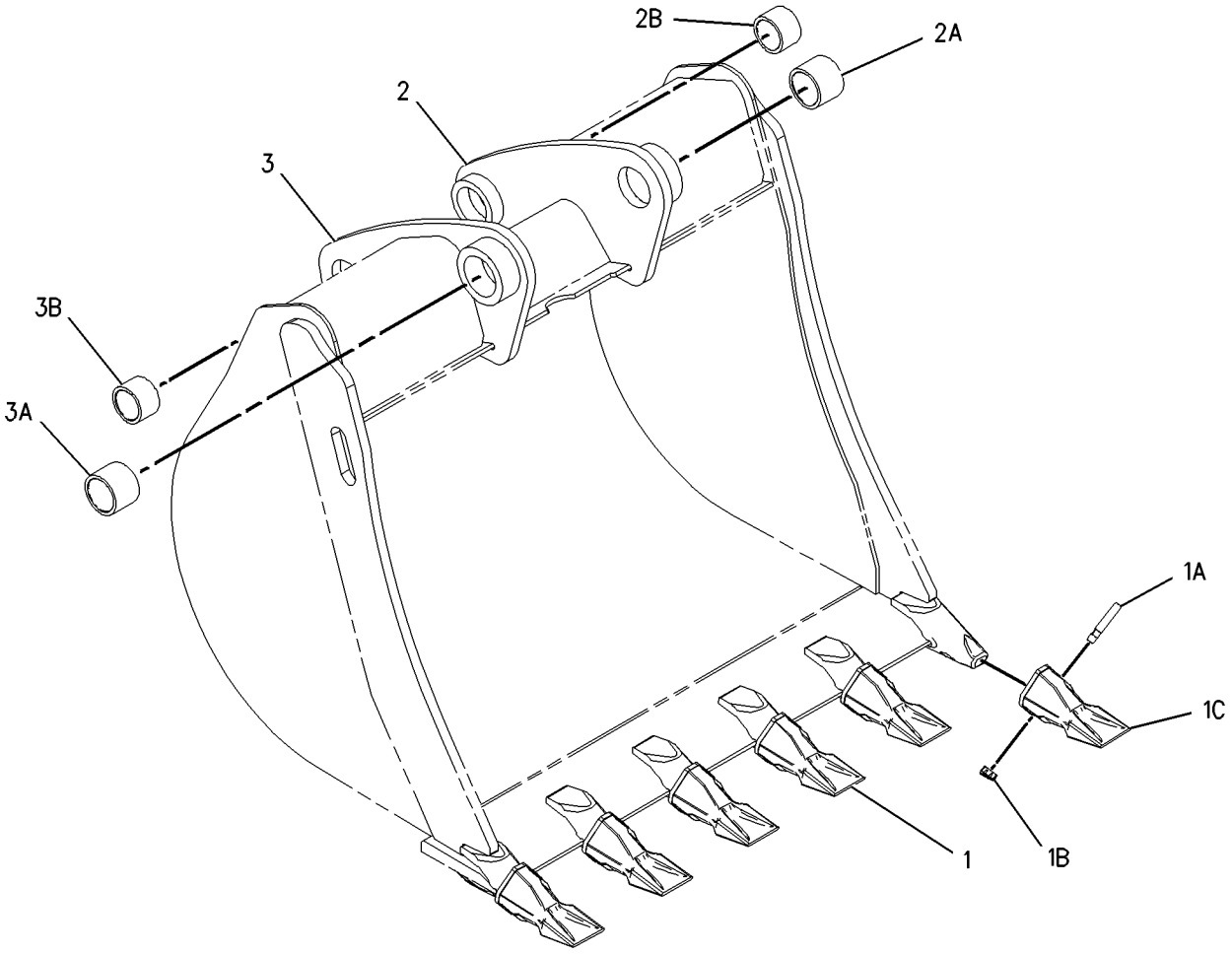


GRAPHIC #1 **<END>** g01001601

# WORK TOOLS

## 219-3390 BUCKET GP-HOE—HIGH CAPACITY

**S/N: BXC1-UP; DSX1-UP**
**458MM (18 IN)**
**AN ATTACHMENT**

**SMCS-6503** **i01941961**

| NOTE | REF NO | GRAPHIC REF | PART NUMBER | QTY | PART NAME 1 2 3 4 5 6 (PRODUCT LEVEL) | SEE PAGE |
|---|---|---|---|---|---|---|
| | 1 | 1 | *208-5245* | 4 | TIP GP-PENETRATION | |
| | | | | | (EACH INCLUDES) | |
| | 1A | 1 | **201-1238** | 1 | PIN | |
| | 1B | 1 | **201-1239** | 1 | RETAINER AS | |
| | 1C | 1 | **208-5235** | 1 | TIP-PENETRATION | |
| | 2 | 1 | *151-7902* | 1 | BRACKET AS-LH | |
| | 2A | 1 | **9R-0162** | 1 | BEARING | |
| | 2B | 1 | **168-0480** | 1 | BEARING-SLEEVE | |
| | 3 | 1 | *151-7903* | 1 | BRACKET AS-RH | |
| | 3A | 1 | **9R-0162** | 1 | BEARING | |
| | 3B | 1 | **168-0480** | 1 | BEARING-SLEEVE | |

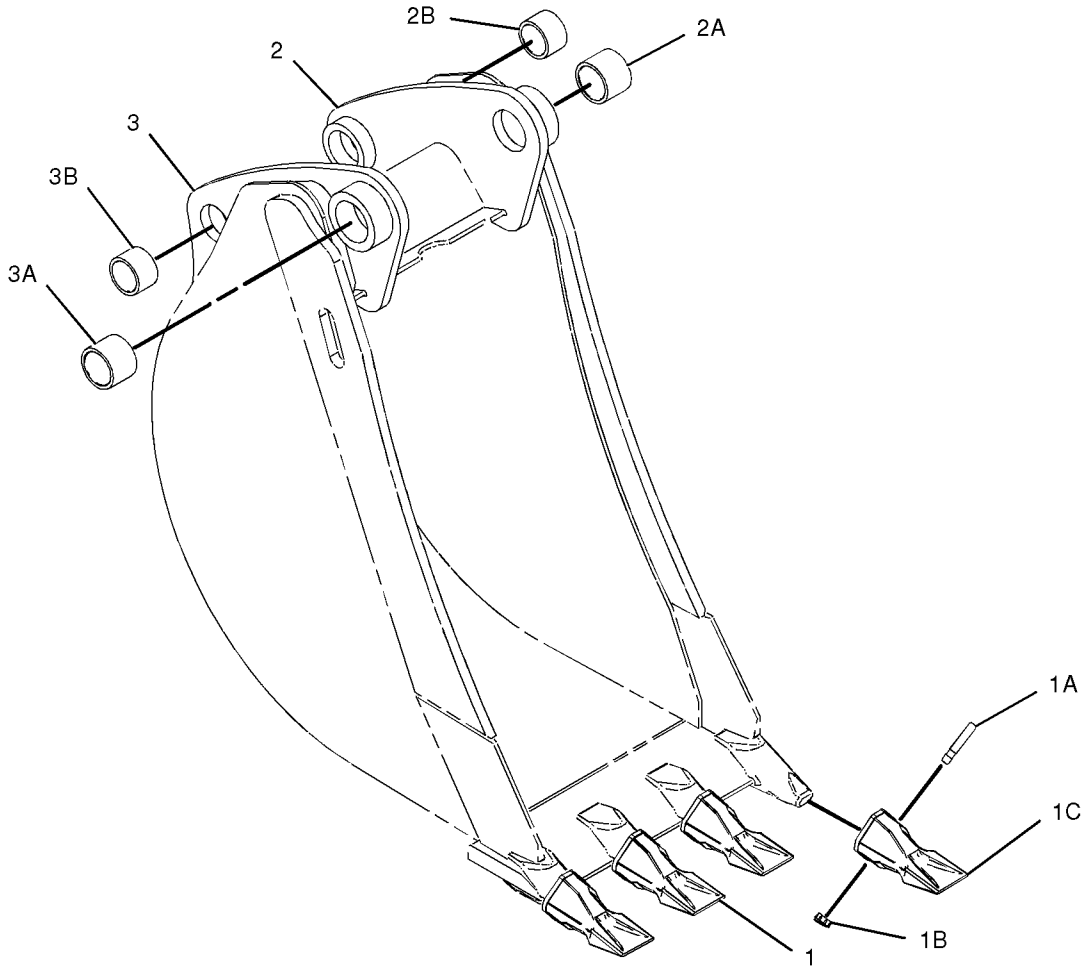


GRAPHIC #1 **<END>** g01011371

# WORK TOOLS

## 219-3391 BUCKET GP-HOE—HIGH CAPACITY

**S/N: BXC1-UP; DSX1-UP**
**610MM (24 IN)**
**AN ATTACHMENT**

**SMCS-6503** **i01942133**

| NOTE | REF NO | GRAPHIC REF | PART NUMBER | QTY | PART NAME 1 2 3 4 5 6 (PRODUCT LEVEL) | SEE PAGE |
|---|---|---|---|---|---|---|
| | 1 | 1 | *208-5245* | 5 | TIP GP-PENETRATION | |
| | | | | | (EACH INCLUDES) | |
| | 1A | 1 | **201-1238** | 1 | PIN | |
| | 1B | 1 | **201-1239** | 1 | RETAINER AS | |
| | 1C | 1 | **208-5235** | 1 | TIP-PENETRATION | |
| | 2 | 1 | *151-7902* | 1 | BRACKET AS-LH | |
| | 2A | 1 | **9R-0162** | 1 | BEARING | |
| | 2B | 1 | **168-0480** | 1 | BEARING-SLEEVE | |
| | 3 | 1 | **151-7903** | 1 | BRACKET AS-RH | |
| | 3A | 1 | **9R-0162** | 1 | BEARING | |
| | 3B | 1 | **168-0480** | 1 | BEARING-SLEEVE | |

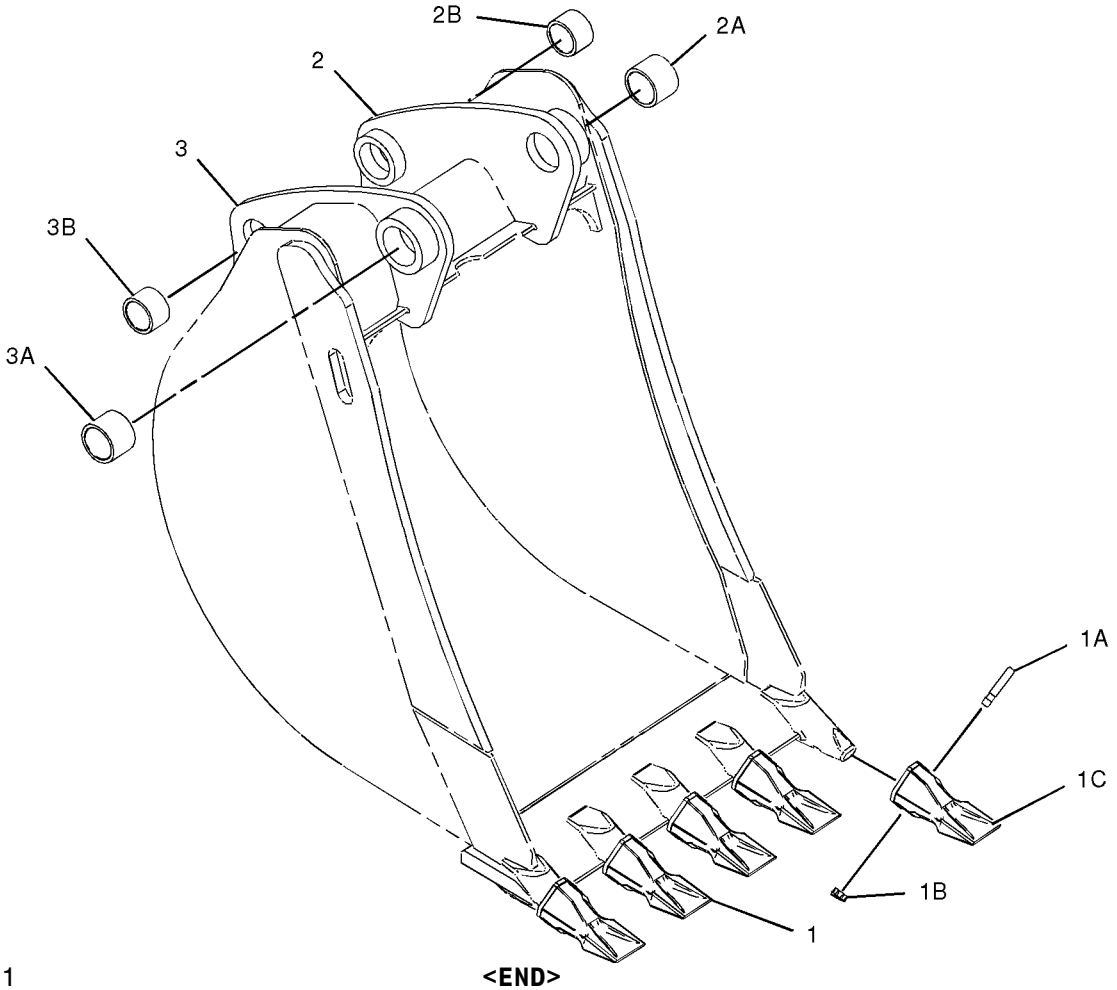


GRAPHIC #1 **<END>** g01011383

# WORK TOOLS

## 219-3392 BUCKET GP-HOE—HIGH CAPACITY

**S/N: BXC1-UP; DSX1-UP**
**762MM (30 IN)**
**AN ATTACHMENT**

**SMCS-6503** **i01942134**

| NOTE | REF NO | GRAPHIC REF | PART NUMBER | QTY | PART NAME 1 2 3 4 5 6 (PRODUCT LEVEL) | SEE PAGE |
|---|---|---|---|---|---|---|
| | 1 | 1 | *208-5245* | 5 | TIP GP-PENETRATION | |
| | | | | | (EACH INCLUDES) | |
| | 1A | 1 | **201-1238** | 1 | PIN | |
| | 1B | 1 | **201-1239** | 1 | RETAINER AS | |
| | 1C | 1 | **208-5235** | 1 | TIP-PENETRATION | |
| | 2 | 1 | *151-7902* | 1 | BRACKET AS-LH | |
| | 2A | 1 | **9R-0162** | 1 | BEARING | |
| | 2B | 1 | **168-0480** | 1 | BEARING-SLEEVE | |
| | 3 | 1 | *151-7903* | 1 | BRACKET AS-RH | |
| | 3A | 1 | **9R-0162** | 1 | BEARING | |
| | 3B | 1 | **168-0480** | 1 | BEARING-SLEEVE | |

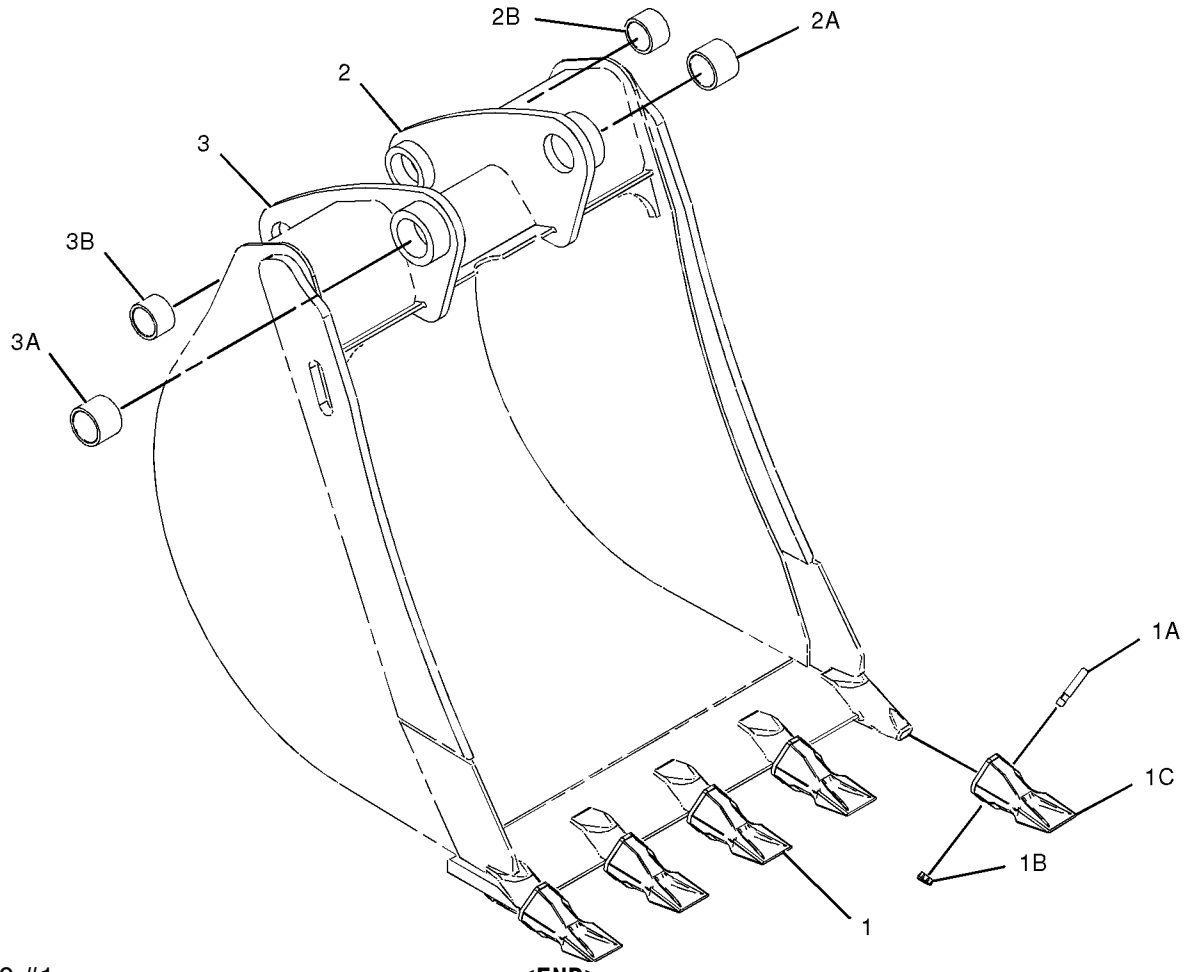


GRAPHIC #1 **<END>** g01011386

# WORK TOOLS

## 219-3393 BUCKET GP-HOE—HIGH CAPACITY

**S/N: BXC1-UP; DSX1-UP**
**914MM (36 IN)**
**AN ATTACHMENT**

**SMCS-6503** **i01942136**

| NOTE | REF NO | GRAPHIC REF | PART NUMBER | QTY | PART NAME 1 2 3 4 5 6 (PRODUCT LEVEL) | SEE PAGE |
|---|---|---|---|---|---|---|
| | 1 | 1 | *208-5245* | 6 | TIP GP-PENETRATION | |
| | | | | | (EACH INCLUDES) | |
| | 1A | 1 | **201-1238** | 1 | PIN | |
| | 1B | 1 | **201-1239** | 1 | RETAINER AS | |
| | 1C | 1 | **208-5235** | 1 | TIP-PENETRATION | |
| | 2 | 1 | *151-7902* | 1 | BRACKET AS-LH | |
| | 2A | 1 | **9R-0162** | 1 | BEARING | |
| | 2B | 1 | **168-0480** | 1 | BEARING-SLEEVE | |
| | 3 | 1 | *151-7903* | 1 | BRACKET AS-RH | |
| | 3A | 1 | **9R-0162** | 1 | BEARING | |
| | 3B | 1 | **168-0480** | 1 | BEARING-SLEEVE | |

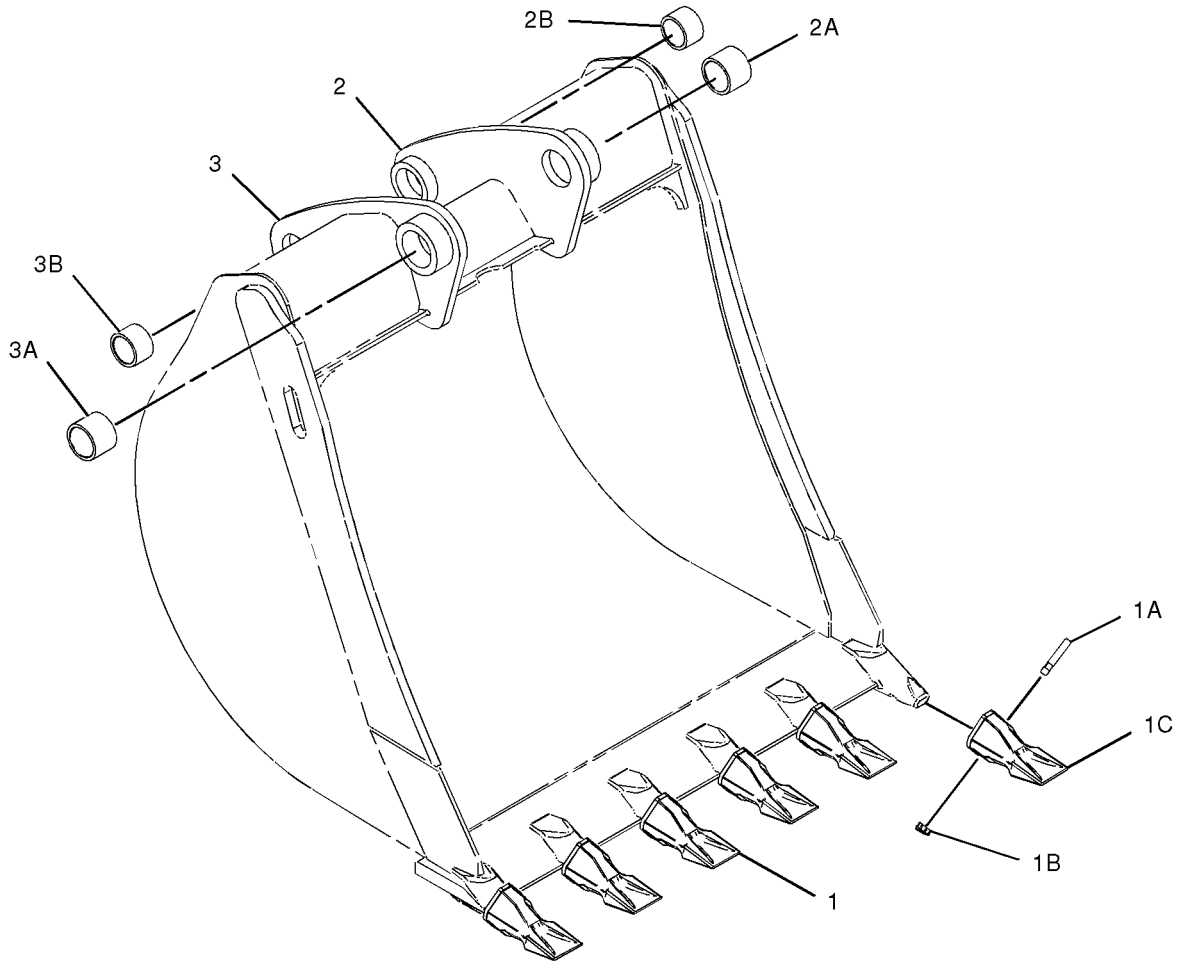


GRAPHIC #1 **<END>** g01011418

# WORK TOOLS

## 219-3394 BUCKET GP-HOE—ROCK

**S/N: BXC1-UP; DSX1-UP**
**305MM (12 IN)**
**PART OF 219-3412 BUCKET GP-HOE**
**AN ATTACHMENT**

**SMCS-6503** **i01942137**

| NOTE | REF NO | GRAPHIC REF | PART NUMBER | QTY | PART NAME 1 2 3 4 5 6 (PRODUCT LEVEL) | SEE PAGE |
|---|---|---|---|---|---|---|
| | 1 | 1 | *208-5245* | 3 | TIP GP-PENETRATION | |
| | | | | | (EACH INCLUDES) | |
| | 1A | 1 | **201-1238** | 1 | PIN | |
| | 1B | 1 | **201-1239** | 1 | RETAINER AS | |
| | 1C | 1 | **208-5235** | 1 | TIP-PENETRATION | |
| | 2 | 1 | *151-7929* | 1 | BRACKET AS-LH | |
| | 2A | 1 | **9R-0320** | 1 | BEARING | |
| | 2B | 1 | **154-5257** | 1 | BEARING | |
| | 3 | 1 | *151-7930* | 1 | BRACKET AS-RH | |
| | 3A | 1 | **9R-0320** | 1 | BEARING | |
| | 3B | 1 | **154-5257** | 1 | BEARING | |

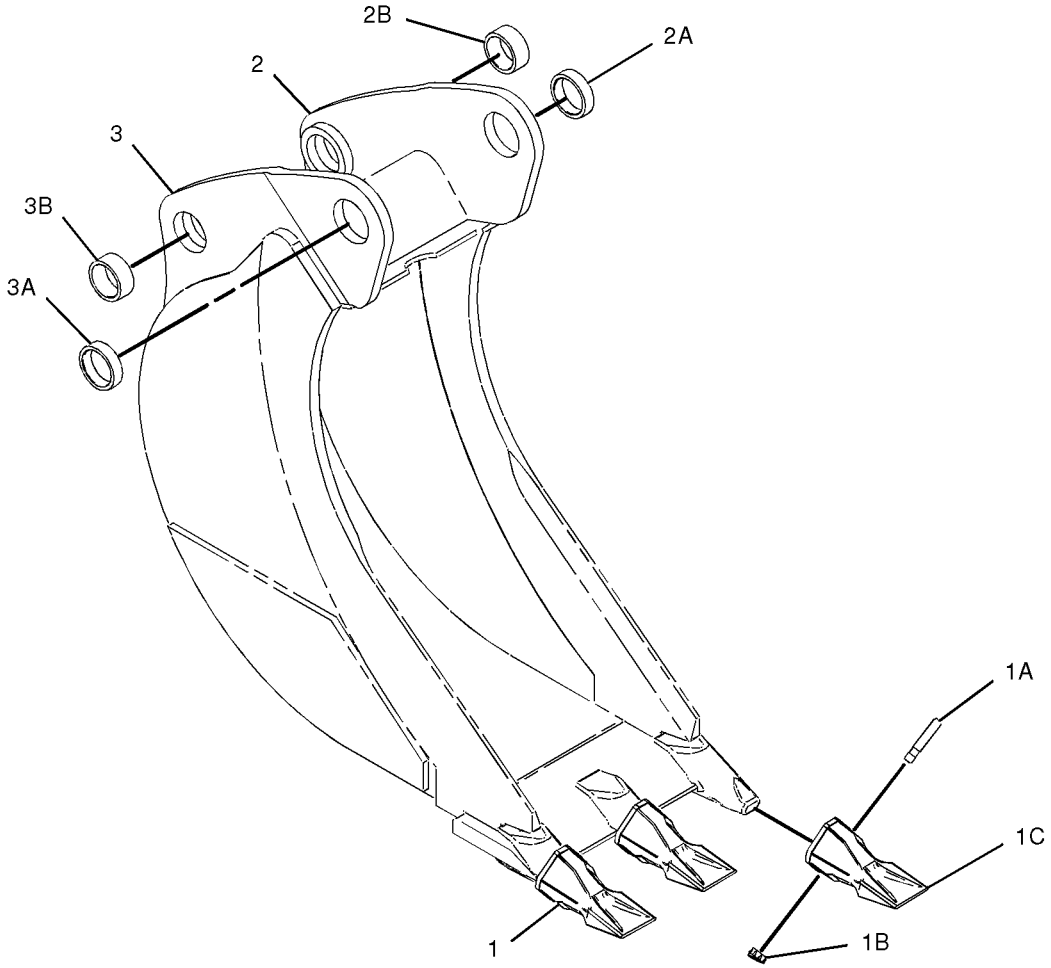


GRAPHIC #1 **<END>** g01011427

# WORK TOOLS

## 219-3395 BUCKET GP-HOE–ROCK

**S/N: BXC1-UP; DSX1-UP**
**458MM (18 IN)**
**AN ATTACHMENT**

**SMCS-6503** **i01942138**

| NOTE | REF NO | GRAPHIC REF | PART NUMBER | QTY | PART NAME 1 2 3 4 5 6 (PRODUCT LEVEL) | SEE PAGE |
|---|---|---|---|---|---|---|
| | 1 | 1 | *208-5245* | 4 | TIP GP-PENETRATION | |
| | | | | | (EACH INCLUDES) | |
| | 1A | 1 | **201-1238** | 1 | PIN | |
| | 1B | 1 | **201-1239** | 1 | RETAINER AS | |
| | 1C | 1 | **208-5235** | 1 | TIP-PENETRATION | |
| | 2 | 1 | *151-7902* | 1 | BRACKET AS-LH | |
| | 2A | 1 | **9R-0162** | 1 | BEARING | |
| | 2B | 1 | **168-0480** | 1 | BEARING-SLEEVE | |
| | 3 | 1 | *151-7903* | 1 | BRACKET AS-RH | |
| | 3A | 1 | **9R-0162** | 1 | BEARING | |
| | 3B | 1 | **168-0480** | 1 | BEARING-SLEEVE | |

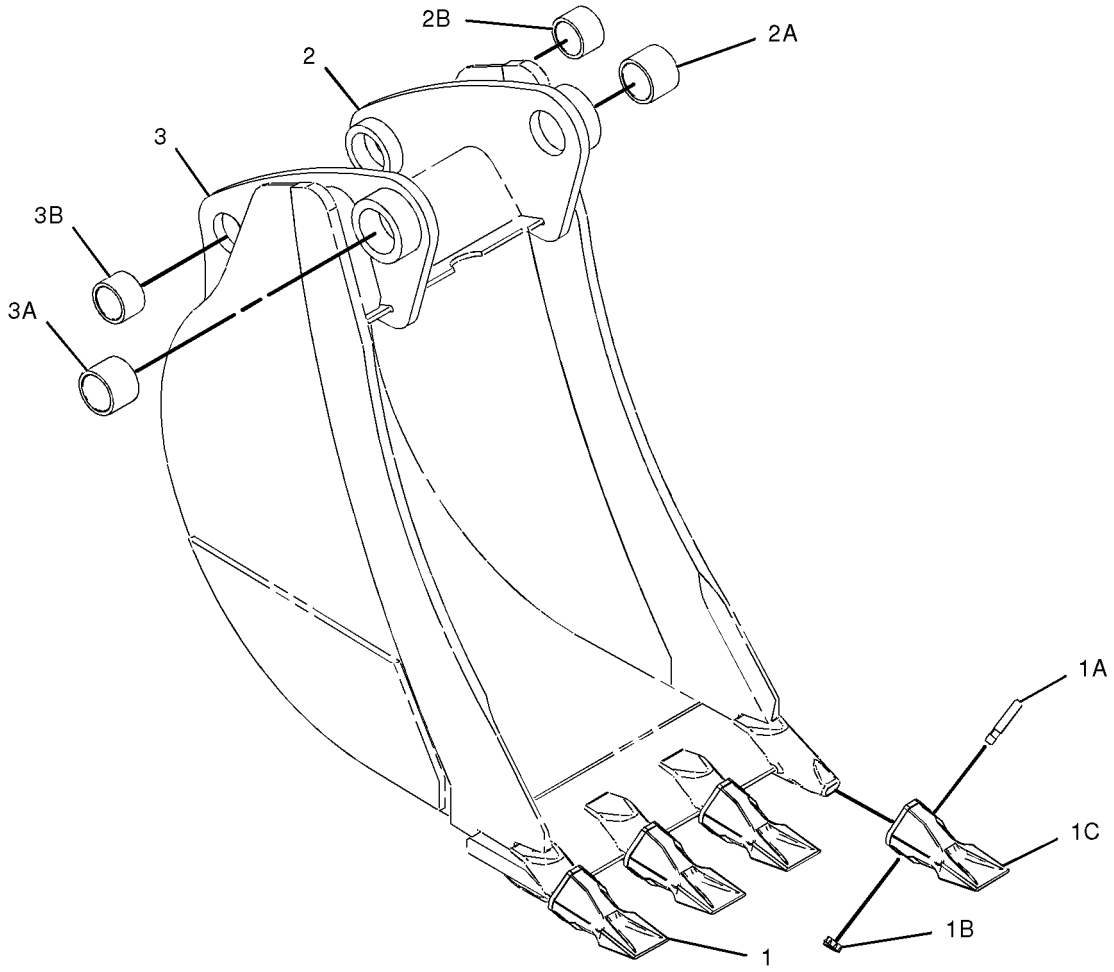


GRAPHIC #1 **<END>** g01011436

# WORK TOOLS

## 219-3396 BUCKET GP-HOE—ROCK

**S/N: BXC1-UP; DSX1-UP**
**610MM (24 IN)**
**AN ATTACHMENT**

**SMCS-6503** **i01942139**

| NOTE | REF NO | GRAPHIC REF | PART NUMBER | QTY | PART NAME 1 2 3 4 5 6 (PRODUCT LEVEL) | SEE PAGE |
|---|---|---|---|---|---|---|
| | 1 | 1 | *208-5245* | 5 | TIP GP-PENETRATION | |
| | | | | | (EACH INCLUDES) | |
| | 1A | 1 | **201-1238** | 1 | PIN | |
| | 1B | 1 | **201-1239** | 1 | RETAINER AS | |
| | 1C | 1 | **208-5235** | 1 | TIP-PENETRATION | |
| | 2 | 1 | *151-7902* | 1 | BRACKET AS-LH | |
| | 2A | 1 | **9R-0162** | 1 | BEARING | |
| | 2B | 1 | **168-0480** | 1 | BEARING-SLEEVE | |
| | 3 | 1 | *151-7903* | 1 | BRACKET AS-RH | |
| | 3A | 1 | **9R-0162** | 1 | BEARING | |
| | 3B | 1 | **168-0480** | 1 | BEARING-SLEEVE | |

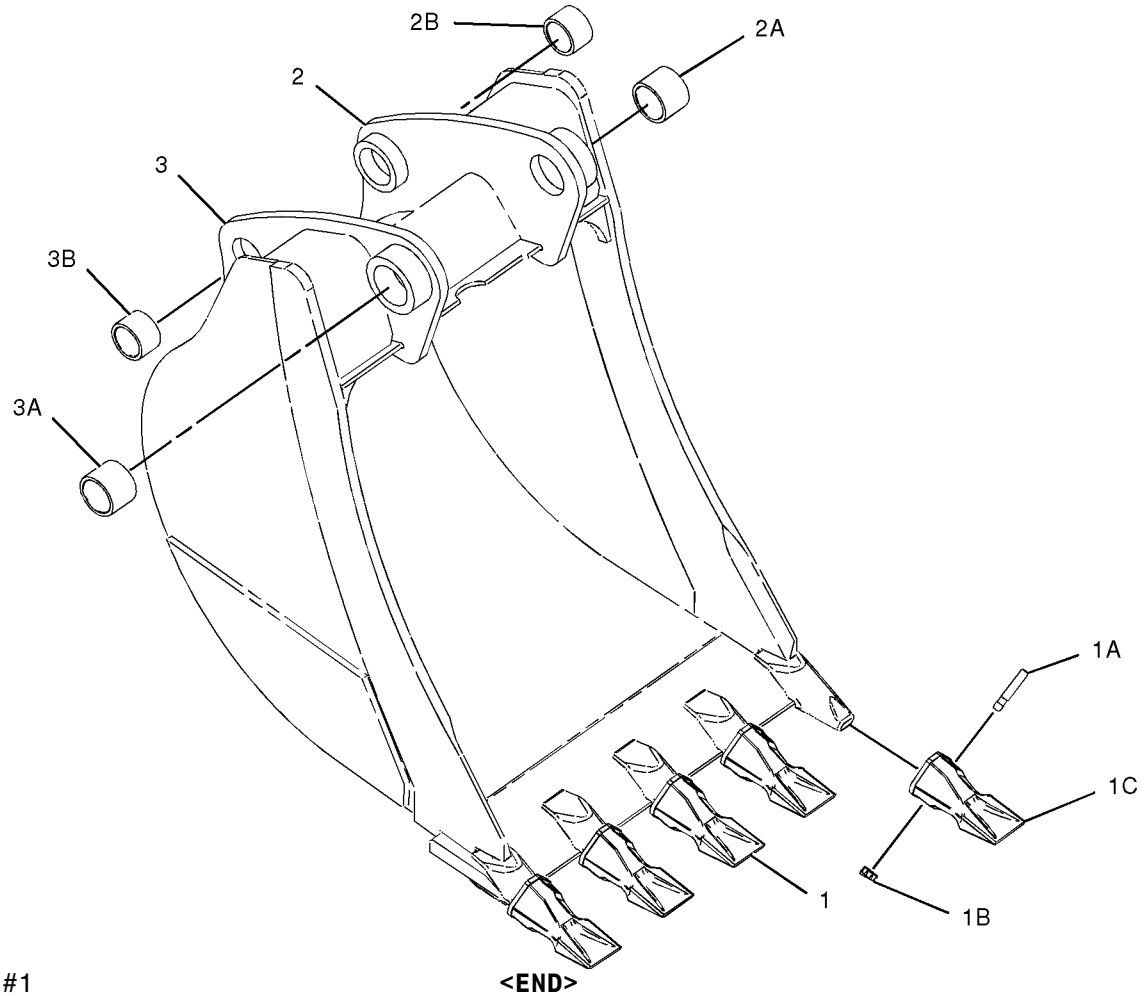


GRAPHIC #1 **<END>** g01011439

# WORK TOOLS

## 219-3397 BUCKET GP-HOE—ROCK

**S/N: BXC1-UP; DSX1-UP**
**762MM (30 IN)**
**AN ATTACHMENT**

**SMCS-6503** **i01942140**

| NOTE | REF NO | GRAPHIC REF | PART NUMBER | QTY | PART NAME 1 2 3 4 5 6 (PRODUCT LEVEL) | SEE PAGE |
|---|---|---|---|---|---|---|
| | 1 | 1 | *208-5245* | 5 | TIP GP-PENETRATION | |
| | | | | | (EACH INCLUDES) | |
| | 1A | 1 | **201-1238** | 1 | PIN | |
| | 1B | 1 | **201-1239** | 1 | RETAINER AS | |
| | 1C | 1 | **208-5235** | 1 | TIP-PENETRATION | |
| | 2 | 1 | *151-7902* | 1 | BRACKET AS-LH | |
| | 2A | 1 | **9R-0162** | 1 | BEARING | |
| | 2B | 1 | **168-0480** | 1 | BEARING-SLEEVE | |
| | 3 | 1 | *151-7903* | 1 | BRACKET AS-RH | |
| | 3A | 1 | **9R-0162** | 1 | BEARING | |
| | 3B | 1 | **168-0480** | 1 | BEARING-SLEEVE | |

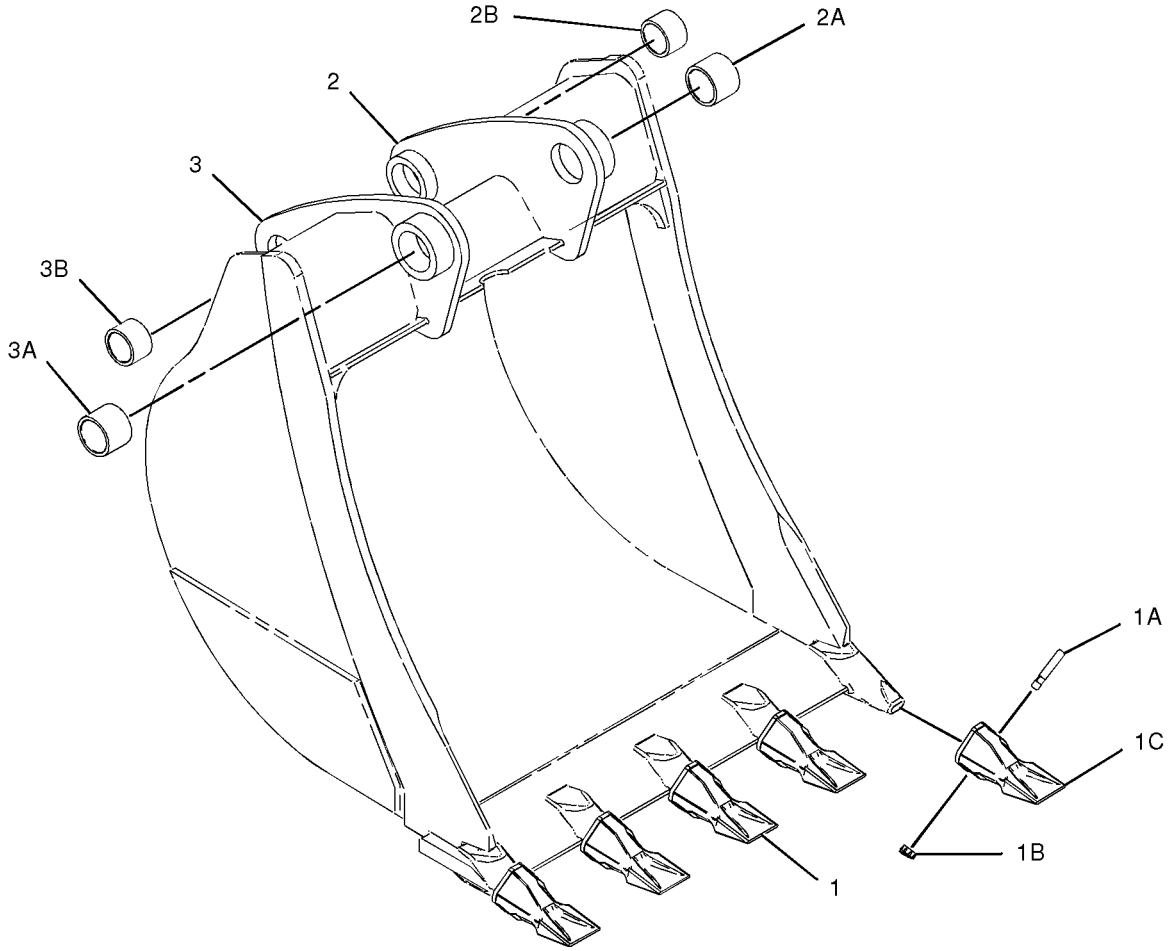


GRAPHIC #1 **<END>** g01011446

# WORK TOOLS

## 219-3398 BUCKET GP-HOE—ROCK

**S/N: BXC1-UP; DSX1-UP**
**914MM (36 IN)**
**AN ATTACHMENT**

**SMCS-6503** **i01942141**

| NOTE | REF NO | GRAPHIC REF | PART NUMBER | QTY | PART NAME 1 2 3 4 5 6 (PRODUCT LEVEL) | SEE PAGE |
|---|---|---|---|---|---|---|
| | 1 | 1 | *208-5245* | 6 | TIP GP-PENETRATION | |
| | | | | | (EACH INCLUDES) | |
| | 1A | 1 | **201-1238** | 1 | PIN | |
| | 1B | 1 | **201-1239** | 1 | RETAINER AS | |
| | 1C | 1 | **208-5235** | 1 | TIP-PENETRATION | |
| | 2 | 1 | *151-7902* | 1 | BRACKET AS-LH | |
| | 2A | 1 | **9R-7902** | 1 | COVER AS | |
| | 2B | 1 | **168-0480** | 1 | BEARING-SLEEVE | |
| | 3 | 1 | *151-7903* | 1 | BRACKET AS-RH | |
| | 3A | 1 | **9R-0162** | 1 | BEARING | |
| | 3B | 1 | **168-0480** | 1 | BEARING-SLEEVE | |
| | 4 | 1 | **219-9486** | 1 | EDGE | |

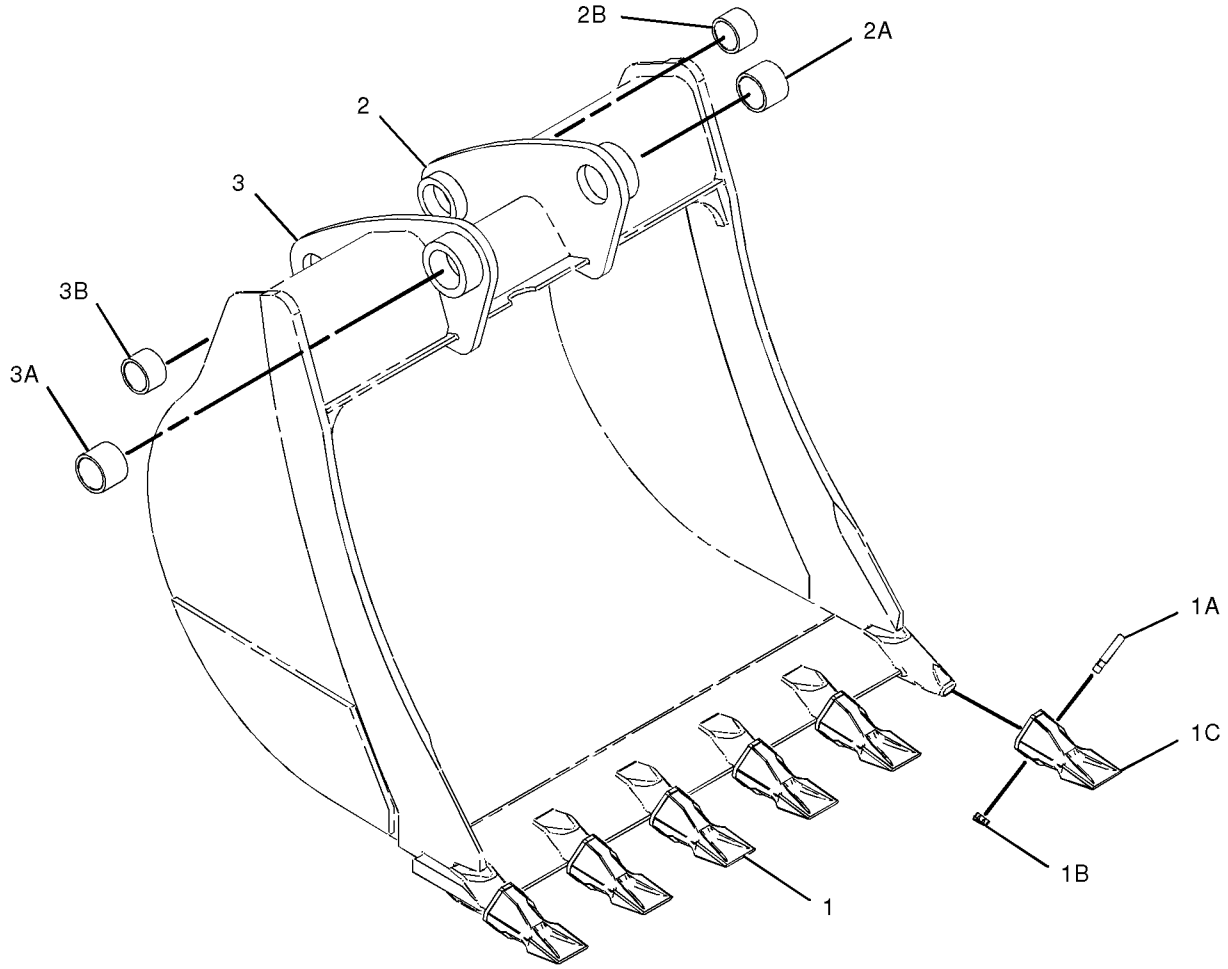


GRAPHIC #1 **<END>** g01011450

# WORK TOOLS

## 219-3410 BUCKET GP-HOE—STANDARD DUTY

**S/N: BXC1-UP; DSX1-UP**
**305MM (12 IN)**
**AN ATTACHMENT**

**SMCS-6503** **i01942147**

| NOTE | REF NO | GRAPHIC REF | PART NUMBER | QTY | PART NAME 1 2 3 4 5 6 (PRODUCT LEVEL) | SEE PAGE |
|---|---|---|---|---|---|---|
| | 1 | 1 | **6V-3213** | 2 | RING-RETAINING | |
| | 2 | 1 | **6V-4364** | 2 | RING-RETAINING | |
| | 3 | 1 | **9R-0158** | 5 | WASHER (46X69X3MM THK) | |
| | 4 | 1 | **9R-1510** | 3 | WASHER (51X82X4MM THK) | |
| | 5 | 1 | **168-0443** | 1 | PIN | |
| | 6 | 1 | **168-0444** | 1 | PIN | |
| Y | 7 | 1 | **219-3379** | 1 | BUCKET GP-HOE | 643 |

Y-SEPARATE ILLUSTRATION

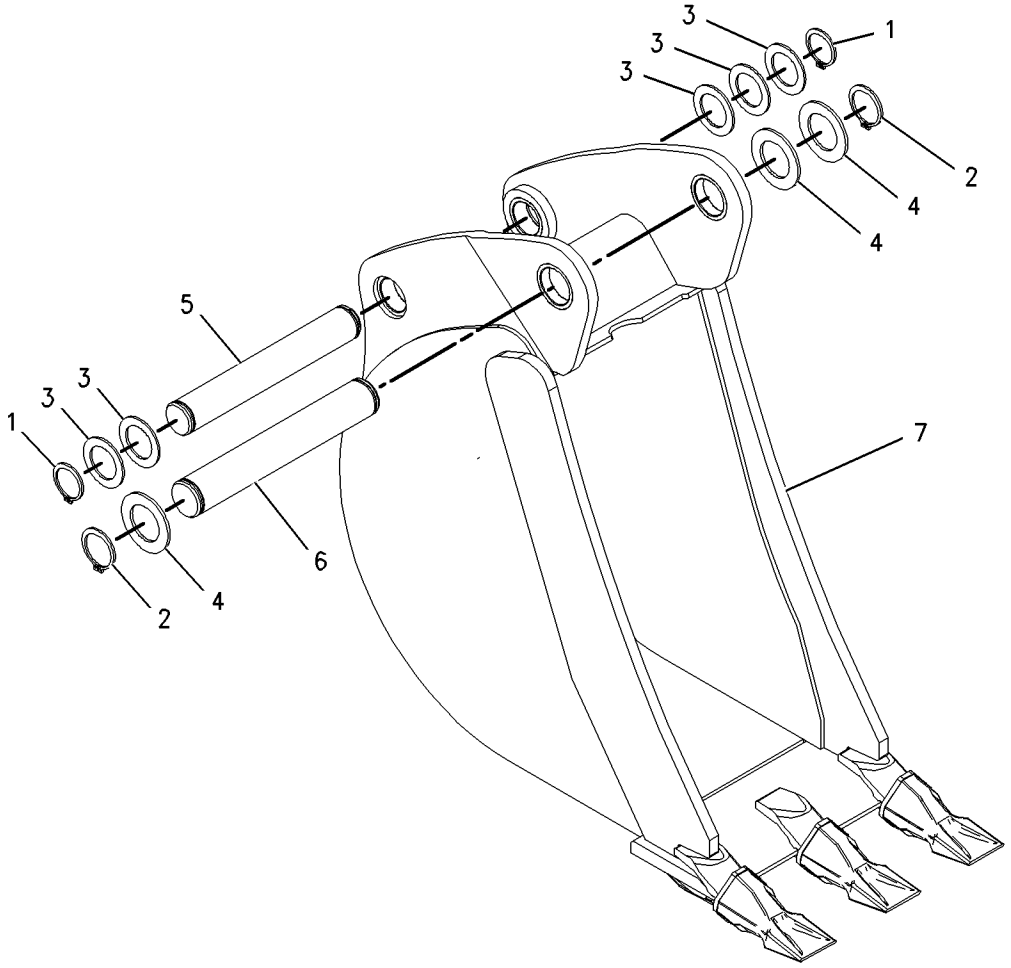


GRAPHIC #1 **<END>** g01001892

# WORK TOOLS

## 219-3411 BUCKET GP-HOE—HEAVY DUTY

**S/N: BXC1-UP; DSX1-UP**
**305MM (12 IN)**
**AN ATTACHMENT**

**SMCS-6503** **i01942150**

| NOTE | REF NO | GRAPHIC REF | PART NUMBER | QTY | PART NAME 1 2 3 4 5 6 (PRODUCT LEVEL) | SEE PAGE |
|---|---|---|---|---|---|---|
| | 1 | 1 | **6V-3213** | 2 | RING-RETAINING | |
| | 2 | 1 | **6V-4364** | 2 | RING-RETAINING | |
| | 3 | 1 | **9R-0158** | 5 | WASHER (46X69X3MM THK) | |
| | 4 | 1 | **9R-1510** | 3 | WASHER (51X82X4MM THK) | |
| | 5 | 1 | **168-0443** | 1 | PIN | |
| | 6 | 1 | **168-0444** | 1 | PIN | |
| Y | 7 | 1 | **219-3384** | 1 | BUCKET GP-HOE | 648 |

Y-SEPARATE ILLUSTRATION

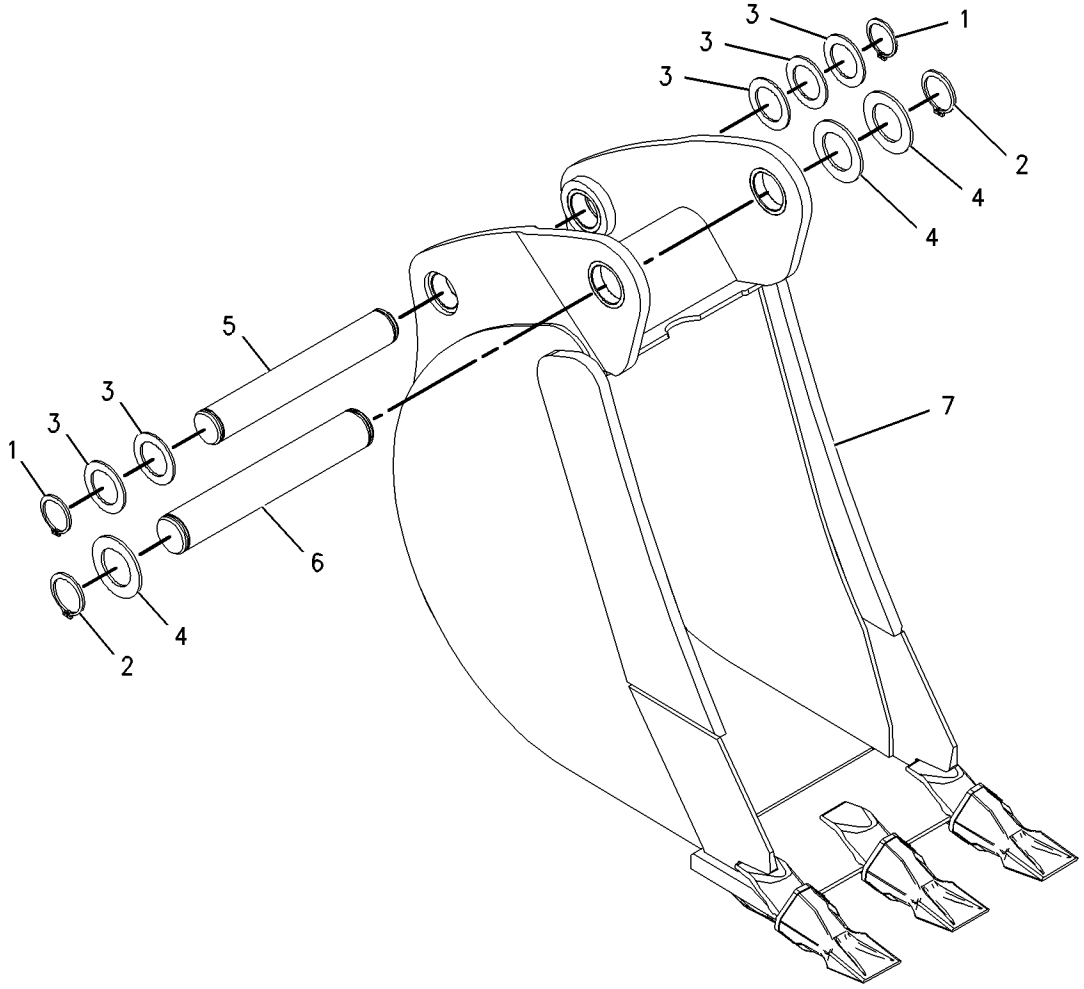


GRAPHIC #1 **<END>** g01001906

# WORK TOOLS

## 219-3412 BUCKET GP-HOE—ROCK

**S/N: BXC1-UP; DSX1-UP**
**305MM (12 IN)**
**AN ATTACHMENT**

**SMCS-6503** **i01942151**

| NOTE | REF NO | GRAPHIC REF | PART NUMBER | QTY | PART NAME 1 2 3 4 5 6 (PRODUCT LEVEL) | SEE PAGE |
|---|---|---|---|---|---|---|
| | 1 | 1 | **6V-3213** | 2 | RING-RETAINING | |
| | 2 | 1 | **6V-4364** | 2 | RING-RETAINING | |
| | 3 | 1 | **9R-0158** | 4 | WASHER (46X69X3MM THK) | |
| | 4 | 1 | **9R-1510** | 3 | WASHER (51X82X4MM THK) | |
| | 5 | 1 | **168-0443** | 1 | PIN | |
| | 6 | 1 | **168-0444** | 1 | PIN | |
| Y | 7 | 1 | **219-3394** | 1 | BUCKET GP-HOE | 658 |

Y-SEPARATE ILLUSTRATION

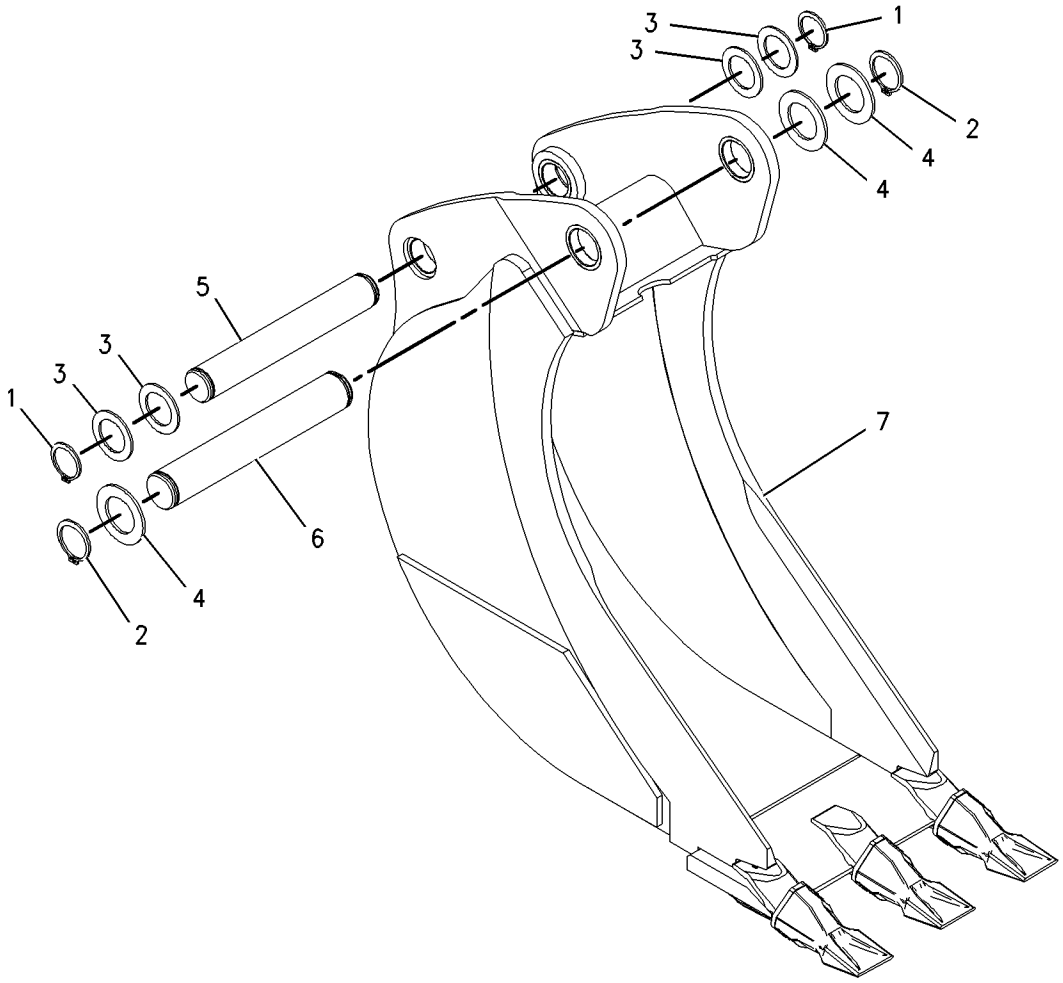


GRAPHIC #1 **<END>** g01001913

# WORK TOOLS

## 104-3964 BUCKET GP-MULTIPURPOSE

**S/N: BXC1-UP; DSX1-UP**
**1.03 CU M (1.35 CU YD)**
**PART OF 111-8635 BUCKET AR-MULTIPURPOSE**
**AN ATTACHMENT**

**SMCS-6104** **i01674364**

| NOTE | REF NO | GRAPHIC REF | PART NUMBER | QTY | PART NAME 1 2 3 4 5 6 (PRODUCT LEVEL) | SEE PAGE |
|---|---|---|---|---|---|---|
| | 1 | 1 | **104-3966** | 1 | BULLDOZER AS | |
| | 2 | 1 | **104-6314** | 2 | BRACKET | |
| | 3 | 1 | **104-6313** | 1 | BRACKET AS | |
| | 4 | 1 | **106-9388** | 1 | BRACKET | |
| | 5 | 1 | **104-3967** | 1 | BULLDOZER AS | |
| | 6 | 1 | **9R-5786** | 1 | EDGE | |
| | 7 | 1 | **9R-0111** | 2 | BEARING-SLEEVE | |
| | 8 | 1 | **110-2861** | 4 | BRACKET | |
| | 9 | 1 | **126-4225** | 1 | CLAM AS | |
| | 10 | 1 | **9R-4675** | 2 | BUSHING-TERMINAL | |
| | 11 | 1 | **9R-5313** | 1 | EDGE | |
| | 12 | 1 | **9R-5294** | 2 | HINGE | |
| | 13 | 1 | **4J-1888** | 2 | PIN-COTTER | |
| | 14 | 1 | **3B-8489** | 2 | FITTING-GREASE (1/8-27 THD) | |
| | 15 | 1 | **9R-4676** | 2 | PIN | |

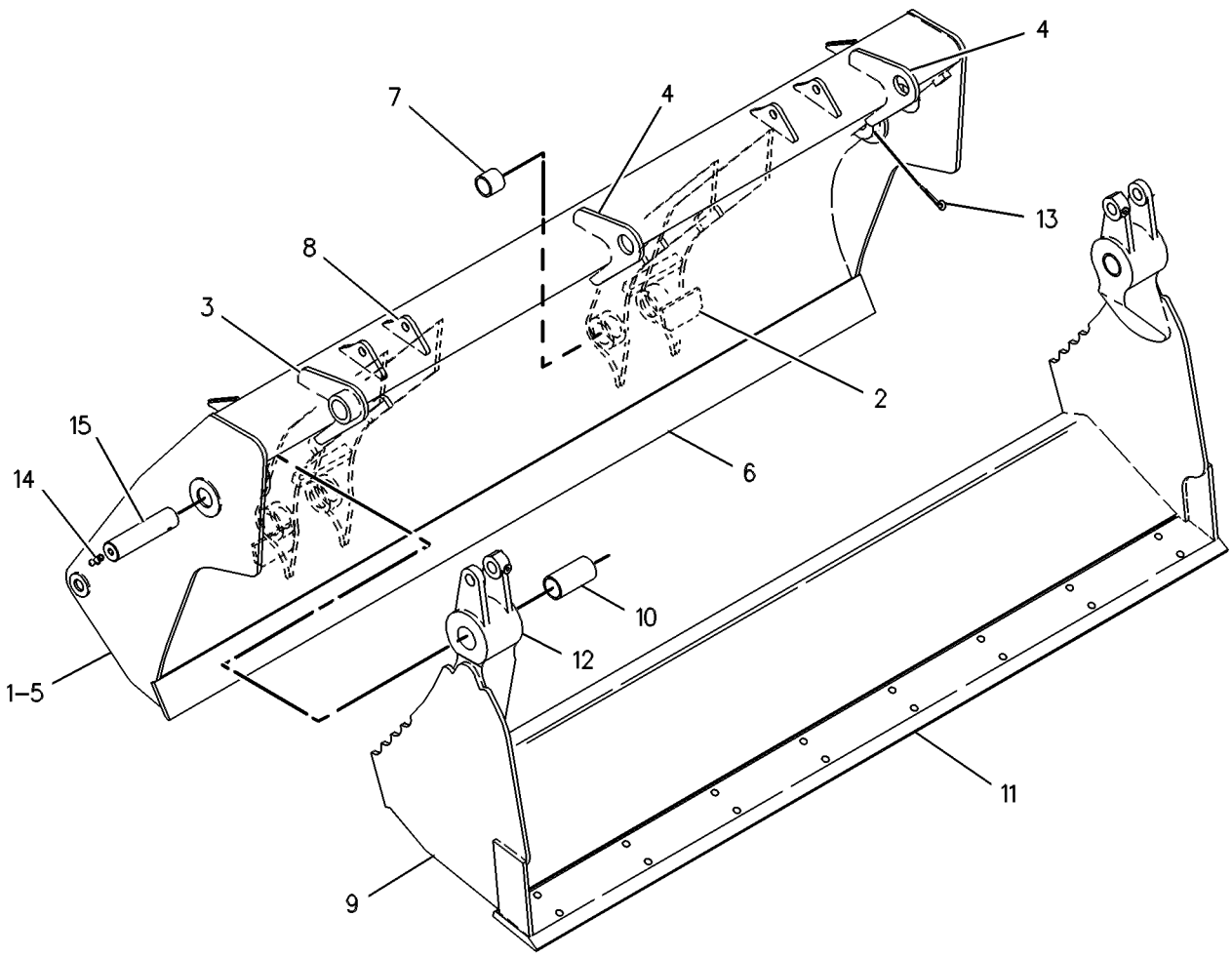


GRAPHIC #1 **<END>** g00131436

# WORK TOOLS

## 104-3965 BUCKET GP-MULTIPURPOSE

**S/N: BXC1-UP; DSX1-UP**
**1.03 CU M (1.35 CU YD)**
**PART OF 111-8634 BUCKET AR-MULTIPURPOSE**
**AN ATTACHMENT**

**SMCS-6104** **i01125138**

| NOTE | REF NO | GRAPHIC REF | PART NUMBER | QTY | PART NAME 1 2 3 4 5 6 (PRODUCT LEVEL) | SEE PAGE |
|---|---|---|---|---|---|---|
| | 1 | 1 | **104-3967** | 1 | BULLDOZER AS | |
| | 2 | 1 | **9R-5786** | 1 | EDGE | |
| | 3 | 1 | **9R-0111** | 2 | BEARING-SLEEVE | |
| | 4 | 1 | **126-4225** | 1 | CLAM AS | |
| | 5 | 1 | **9R-4675** | 2 | BUSHING-TERMINAL | |
| | 6 | 1 | **9R-5313** | 1 | EDGE | |
| | 7 | 1 | **9R-5294** | 2 | HINGE | |
| | 8 | 1 | **4J-1888** | 2 | COTTER | |
| | 9 | 1 | **3B-8489** | 2 | FITTING-GREASE (1/8-27 THD) | |
| | 10 | 1 | **9R-4676** | 2 | PIN | |

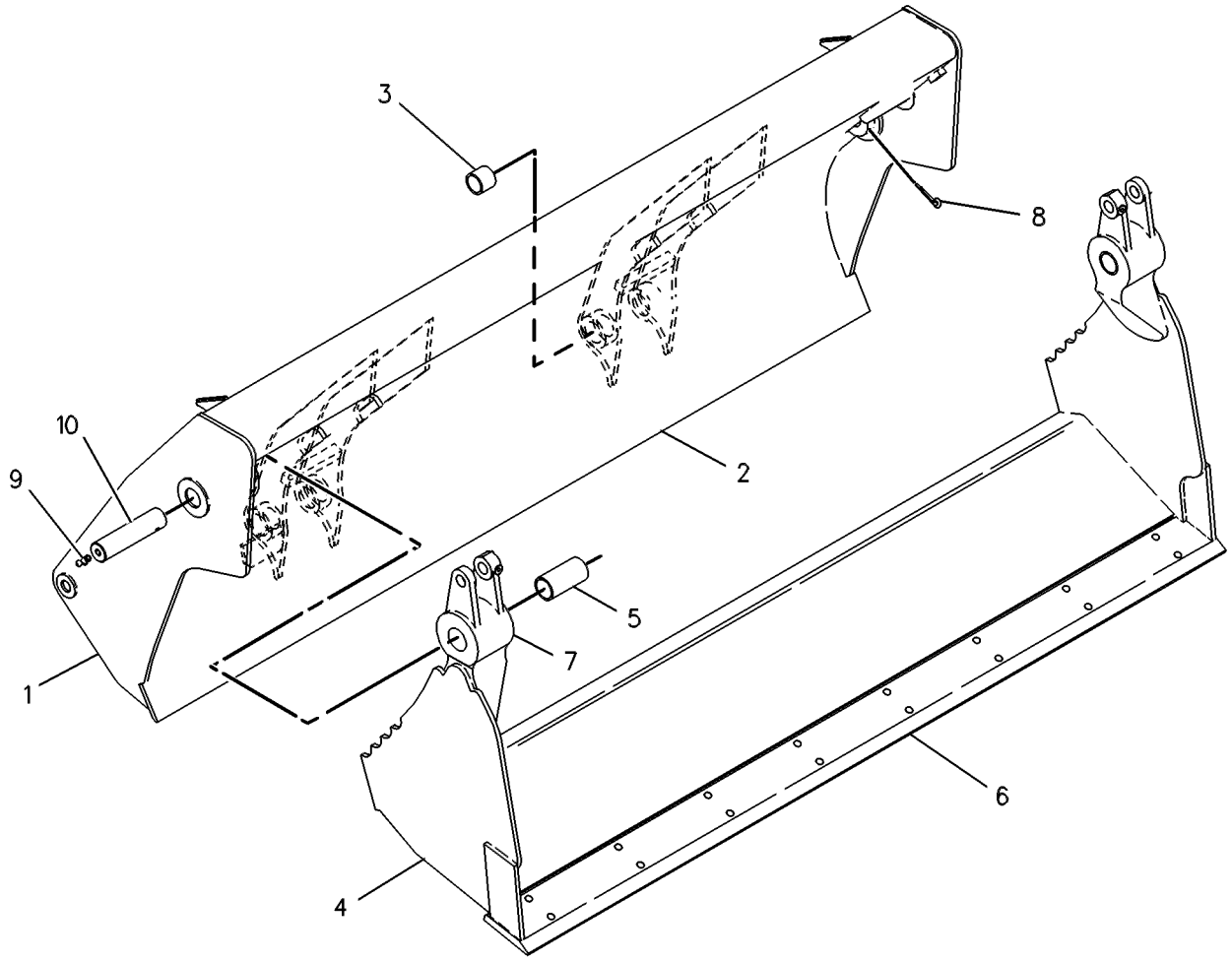


GRAPHIC #1 **<END>** g00131434

# WORK TOOLS

## 108-3036 BUCKET GP-MULTIPURPOSE

**S/N: BXC1-UP; DSX1-UP**
**0.76 CU M (1.0 CU YD)**
**PART OF 112-0938 BUCKET AR-MULTIPURPOSE**
**AN ATTACHMENT**

**SMCS-6104** **i01531720**

| NOTE | REF NO | GRAPHIC REF | PART NUMBER | QTY | PART NAME 1 2 3 4 5 6 (PRODUCT LEVEL) | SEE PAGE |
|---|---|---|---|---|---|---|
| | 1 | 1 | **108-3037** | 1 | BULLDOZER AS | |
| | 2 | 1 | **9R-4670** | 1 | EDGE | |
| | 3 | 1 | **9R-0111** | 2 | BEARING-SLEEVE | |
| | 4 | 1 | **126-4224** | 1 | CLAM AS | |
| | 5 | 1 | **9R-4675** | 2 | BUSHING-TERMINAL | |
| | 6 | 1 | **9R-4672** | 1 | EDGE | |
| | 7 | 1 | **9R-5294** | 2 | HINGE | |
| | 8 | 1 | **125-7116** | 1 | EDGE | |
| | 9 | 1 | **4J-1888** | 2 | COTTER | |
| | 10 | 1 | **3B-8489** | 2 | FITTING-GREASE | |
| | 11 | 1 | **9R-4676** | 2 | PIN | |

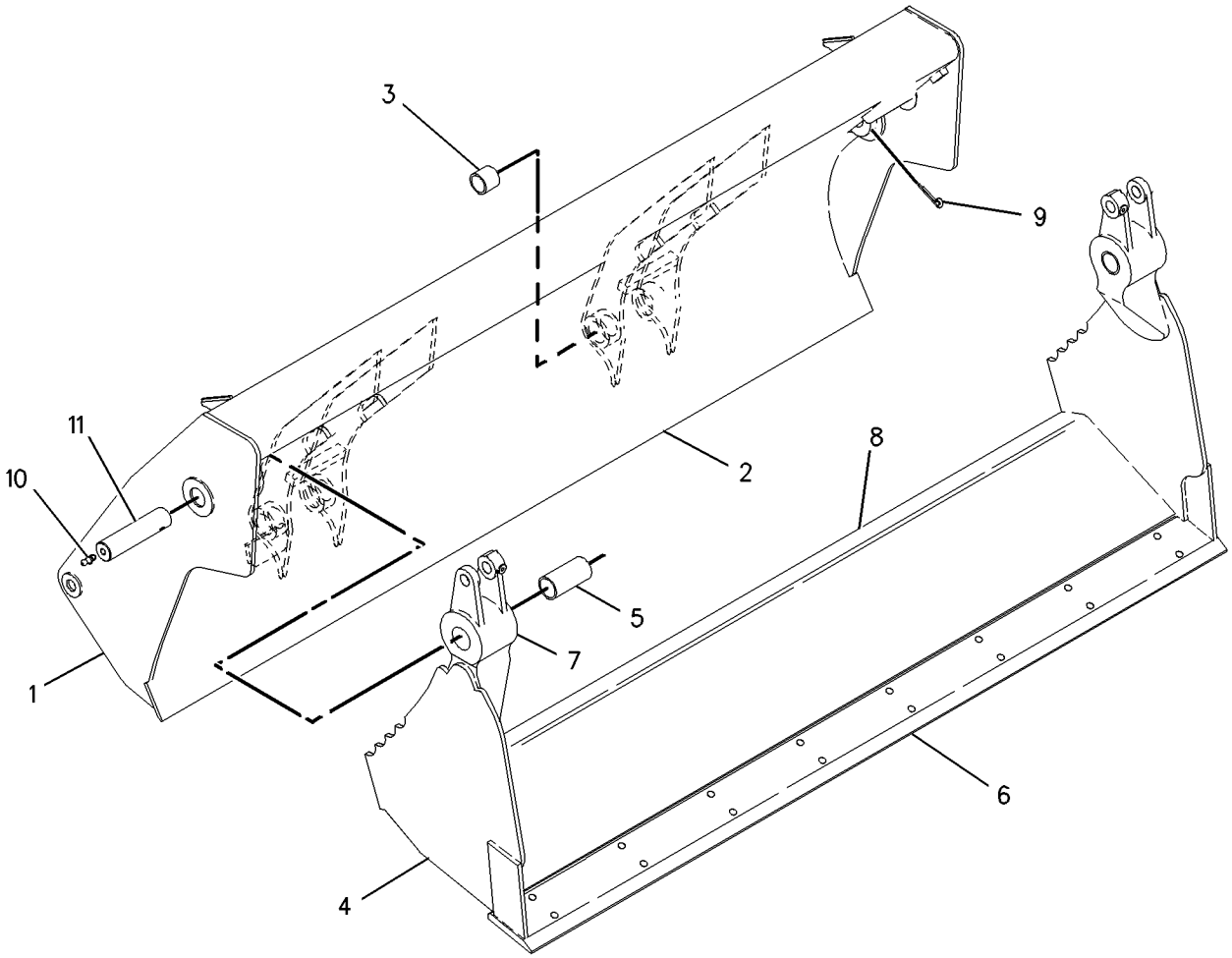


GRAPHIC #1 **<END>** g00795245

# WORK TOOLS

## 112-1778 BUCKET GP-MULTIPURPOSE

**S/N: BXC1-UP; DSX1-UP**
**0.65 CU M (0.85 CU YD)**
**PART OF 112-0939 BUCKET AR-MULTIPURPOSE**
**AN ATTACHMENT**

**SMCS-6104** **i01674369**

| NOTE | REF NO | GRAPHIC REF | PART NUMBER | QTY | PART NAME 1 2 3 4 5 6 (PRODUCT LEVEL) | SEE PAGE |
|---|---|---|---|---|---|---|
| | 1 | 1 | **112-1777** | 1 | BULLDOZER AS | |
| | 2 | 1 | **104-6314** | 2 | BRACKET | |
| | 3 | 1 | **104-6313** | 1 | BRACKET AS | |
| | 4 | 1 | **106-9388** | 1 | BRACKET | |
| | 5 | 1 | **108-3037** | 1 | BULLDOZER AS | |
| | 6 | 1 | **9R-4670** | 1 | EDGE | |
| | 7 | 1 | **9R-0111** | 2 | BEARING-SLEEVE | |
| | 8 | 1 | **110-2861** | 4 | BRACKET | |
| | 9 | 1 | **126-4224** | 1 | CLAM AS | |
| | 10 | 1 | **9R-4675** | 2 | BUSHING-TERMINAL | |
| | 11 | 1 | **9R-4672** | 1 | EDGE | |
| | 12 | 1 | **9R-5294** | 2 | HINGE | |
| | 13 | 1 | **4J-1888** | 2 | PIN-COTTER | |
| | 14 | 1 | **3B-8489** | 2 | FITTING-GREASE (1/8-27 THD) | |
| | 15 | 1 | **9R-4676** | 2 | PIN | |

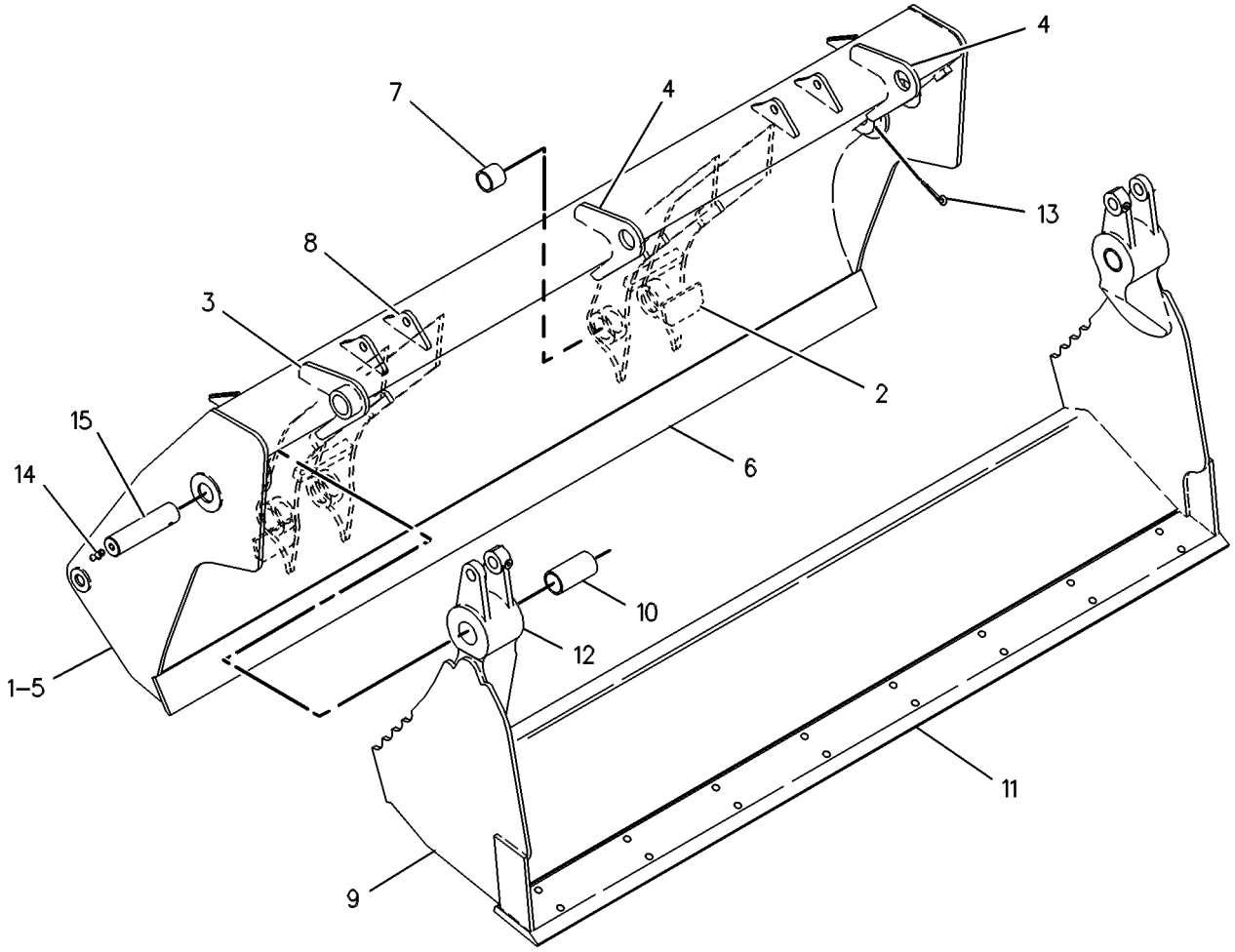


GRAPHIC #1 **<END>** g00131436

# WORK TOOLS

## *112-1918* BUCKET GP-MULTIPURPOSE

**S/N: BXC1-UP; DSX1-UP**
**0.96 CU M (1.25 CU YD). WITH FORKS**
**PART OF 124-0488 BUCKET AR-MULTIPURPOSE**
**AN ATTACHMENT**

**SMCS-6104** **i01953279**

| NOTE | REF NO | GRAPHIC REF | PART NUMBER | QTY | PART NAME 1 2 3 4 5 6 (PRODUCT LEVEL) | SEE PAGE |
|---|---|---|---|---|---|---|
| | 1 | 1 | **3B-8489** | 2 | FITTING-GREASE | |
| | 2 | 1 | **4J-1888** | 2 | PIN-COTTER | |
| | 3 | 1 | **9R-4676** | 2 | PIN | |
| | 4 | 1 | **126-4224** | 1 | CLAM AS | |
| | 4A | 1 | **9R-5294** | 2 | HINGE | |
| | 4B | 1 | **9R-4675** | 2 | BUSHING-TERMINAL | |
| | 4C | 1 | **9R-4672** | 2 | EDGE | |
| | 4D | 1 | **125-7116** | 1 | EDGE | |
| | 5 | 1 | **118-1345** | 1 | DOZER AS | |
| | 5A | 1 | **104-6313** | 1 | BRACKET AS | |
| | 5B | 1 | **106-9388** | 2 | BRACKET | |
| | 5C | 1 | **104-6314** | 2 | BRACKET | |
| | 5D | 1 | **110-2861** | 4 | BRACKET | |
| | 5E | 1 | **112-1775** | 2 | PLATE AS | |
| | 5F | 1 | **9R-4670** | 1 | EDGE | |
| F | | 1 | **9R-5271** | 2 | BOSS | |
| F | | 1 | **9R-1496** | 4 | BEARING-SLEEVE (40.196MM ID) | |

F-NOT SHOWN

*112-1918* **BUCKET GP-MULTIPURPOSE** *(contd.)* **i01953279**

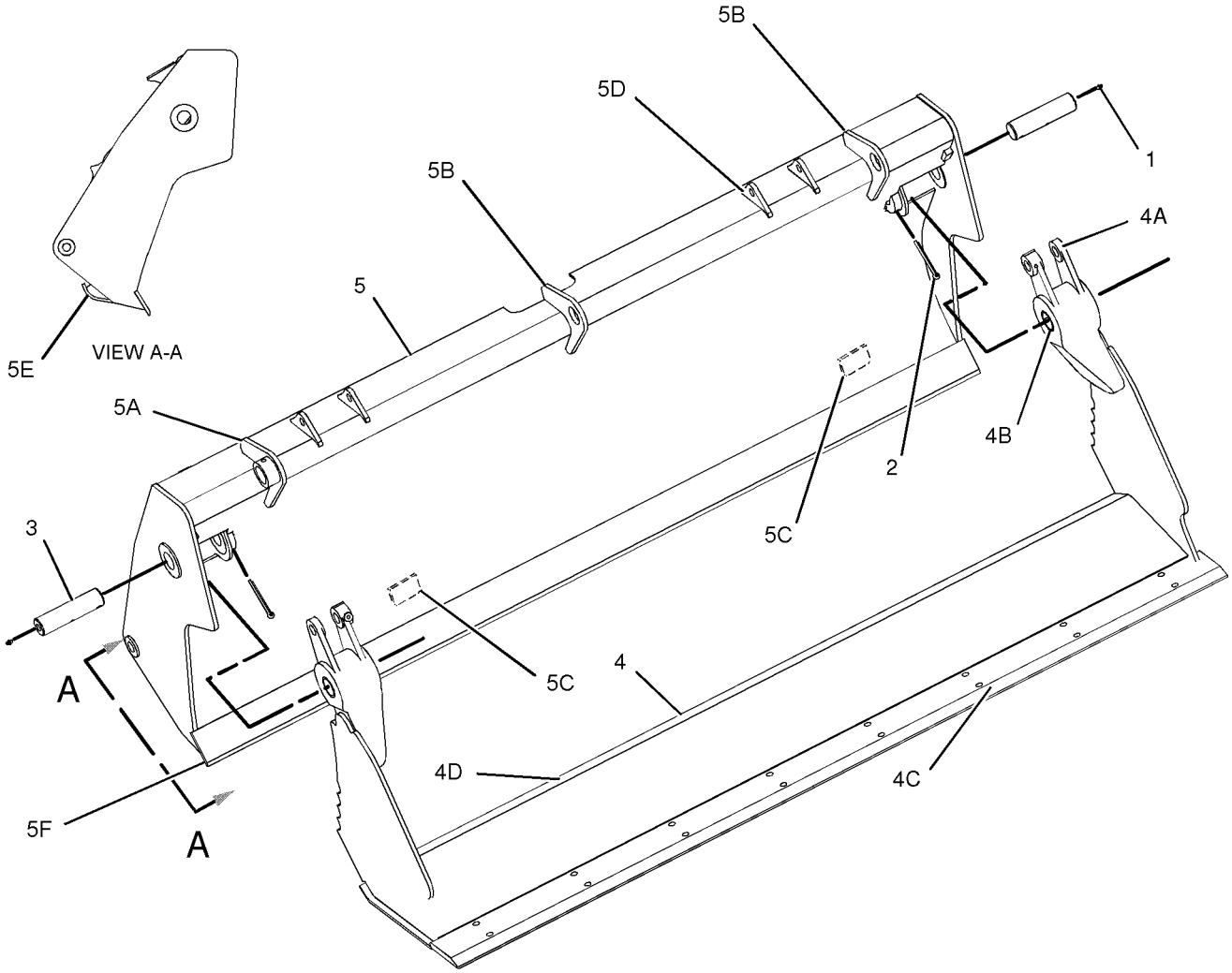


GRAPHIC #1 **<END>** g01015938

# WORK TOOLS

## *112-1922* BUCKET GP-MULTIPURPOSE

**S/N: BXC1-UP; DSX1-UP**
**0.96 CU M (1.25 CU YD). WITH FORKS**
**PART OF 124-0487, 208-0827 BUCKET AR-MULTIPURPOSE**
**AN ATTACHMENT**

**SMCS-6104** **i01953276**

| NOTE | REF NO | GRAPHIC REF | PART NUMBER | QTY | PART NAME 1 2 3 4 5 6 (PRODUCT LEVEL) | SEE PAGE |
|---|---|---|---|---|---|---|
| | 1 | 1 | **3B-8489** | 2 | FITTING-GREASE | |
| | 2 | 1 | **4J-1888** | 2 | PIN-COTTER | |
| | 3 | 1 | **9R-4676** | 2 | PIN | |
| | 4 | 1 | **126-4224** | 1 | CLAM AS | |
| | 4A | 1 | **9R-4675** | 2 | BUSHING-TERMINAL | |
| | 4B | 1 | **9R-5294** | 2 | HINGE | |
| | 4C | 1 | **9R-4672** | 2 | EDGE | |
| | 4D | 1 | **125-7116** | 1 | EDGE | |
| | 5 | 1 | **118-1345** | 1 | DOZER AS | |
| | 5A | 1 | **104-6313** | 1 | BRACKET AS | |
| | 5B | 1 | **106-9388** | 2 | BRACKET | |
| | 5C | 1 | **104-6314** | 2 | BRACKET | |
| | 5D | 1 | **110-2861** | 4 | BRACKET | |
| | 5E | 1 | **112-1775** | 2 | PLATE AS | |
| | 5F | 1 | **9R-4670** | 1 | EDGE | |
| F | | 1 | **9R-5271** | 2 | BOSS | |
| F | | 1 | **9R-1496** | 4 | BEARING-SLEEVE (40.196MM ID) | |

F-NOT SHOWN

*112-1922* **BUCKET GP-MULTIPURPOSE** *(contd.)* **i01953276**

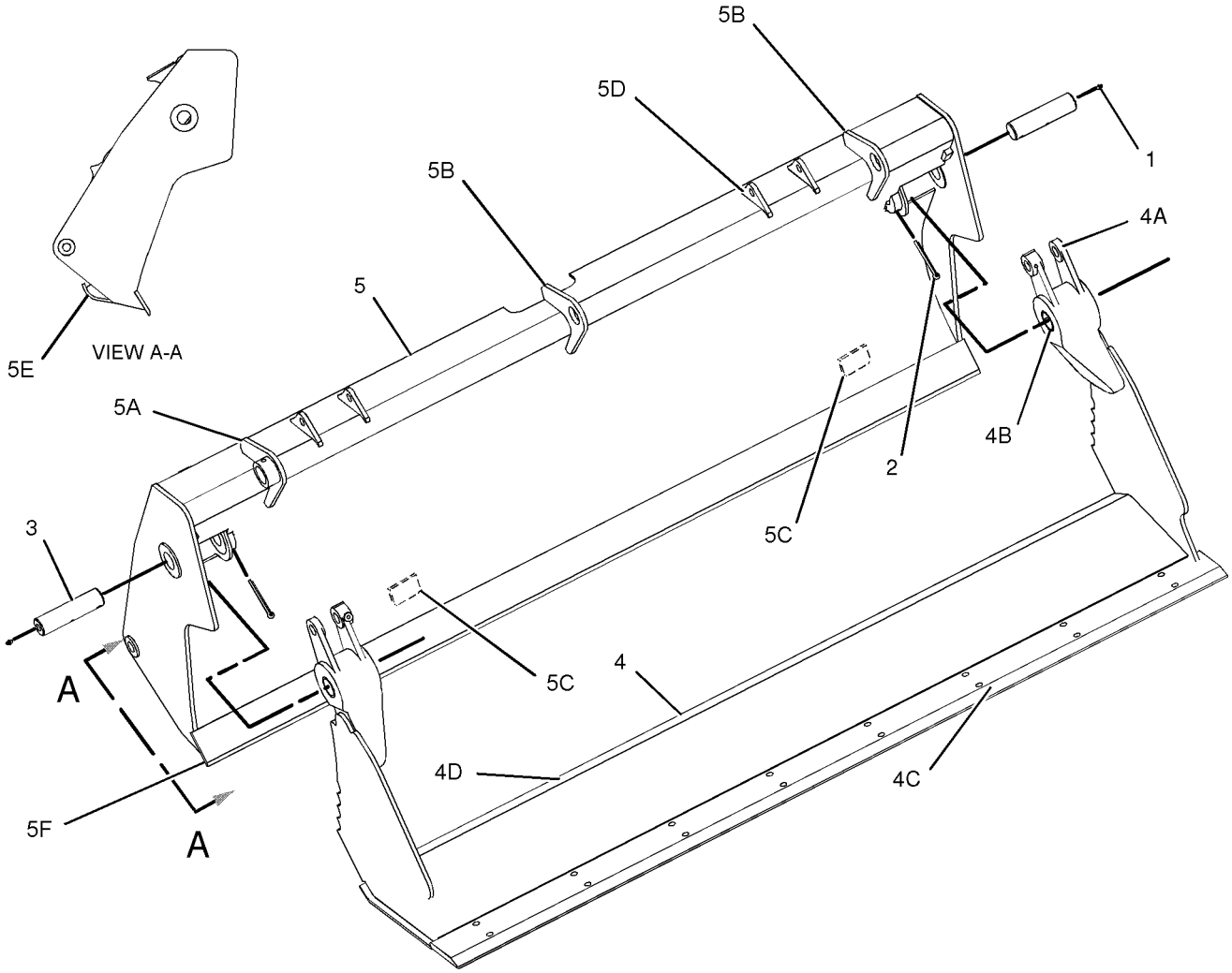


GRAPHIC #1 **<END>** g01015938

# WORK TOOLS

## *112-1924* BUCKET GP-MULTIPURPOSE

**S/N: BXC1-UP; DSX1-UP**
**1.03 CU M (1.35 CU YD). WITHOUT FORKS**
**PART OF 124-0486 BUCKET AR-MULTIPURPOSE**
**AN ATTACHMENT**

**SMCS-6104** **i01506067**

| NOTE | REF NO | GRAPHIC REF | PART NUMBER | QTY | PART NAME 1 2 3 4 5 6 (PRODUCT LEVEL) | SEE PAGE |
|---|---|---|---|---|---|---|
| | 1 | 1 | **3B-8489** | 2 | FITTING-GREASE | |
| | 2 | 1 | **4J-1888** | 2 | COTTER | |
| | 3 | 1 | **9R-4676** | 2 | PIN | |
| | 4 | 1 | **114-3826** | 1 | BULLDOZER AS | |
| F | | 1 | **9R-5271** | 2 | BOSS (M10X1.5X25MM) | |
| | 5 | 1 | **9R-5786** | 1 | EDGE | |
| | 6 | 1 | **112-1775** | 1 | PLATE AS | |
| F | | 1 | **9R-1496** | 4 | BEARING-SLEEVE (40.196MM ID) | |
| | 7 | 1 | **126-4225** | 1 | CLAM AS | |
| | 8 | 1 | **9R-5313** | 1 | EDGE | |
| | 9 | 1 | **125-7117** | 1 | EDGE | |
| | 10 | 1 | **9R-4675** | 2 | BUSHING-TERMINAL | |
| | 11 | 1 | **9R-5294** | 2 | HINGE | |

F-NOT SHOWN

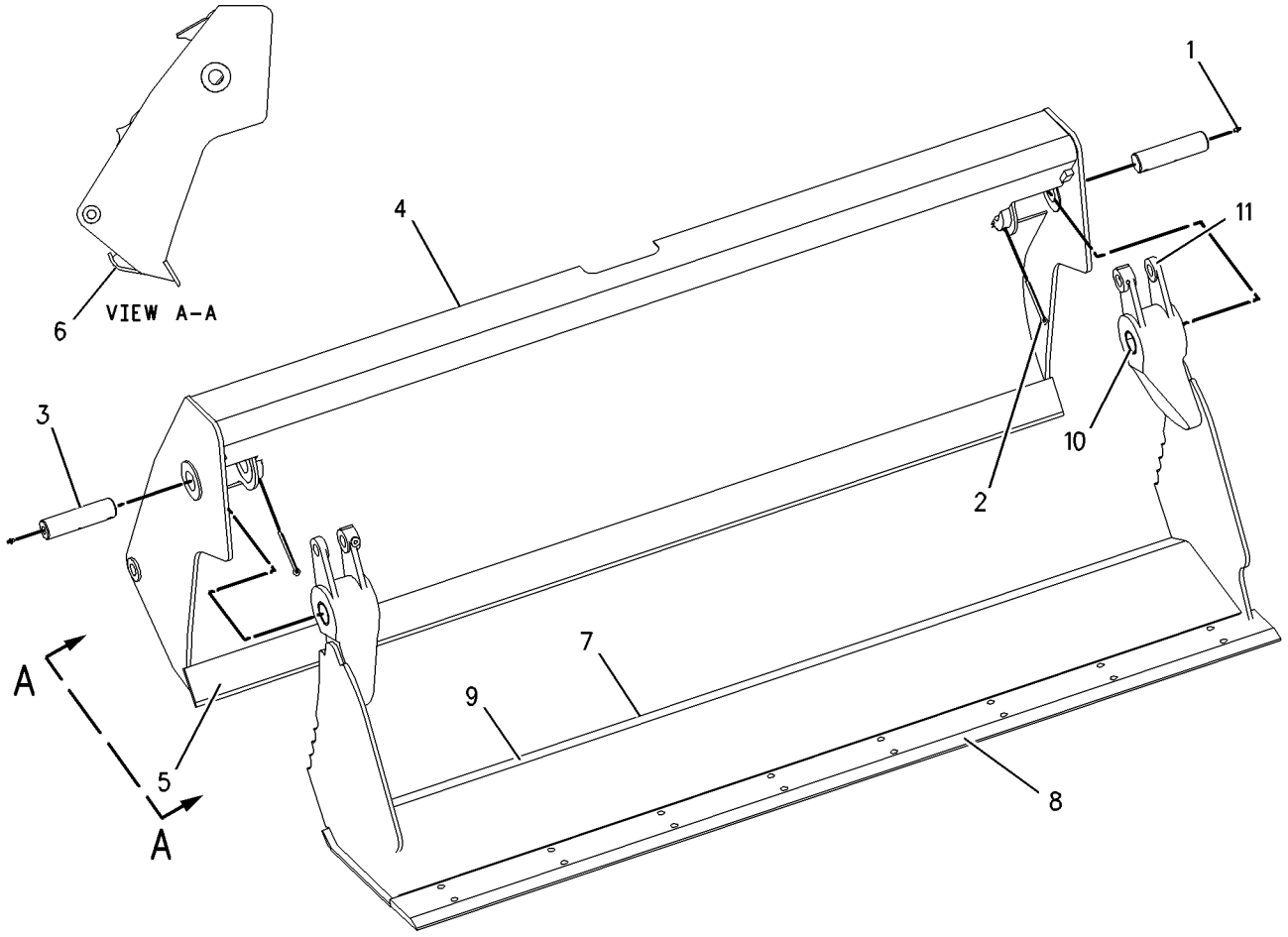


GRAPHIC #1 **<END>** g00781608

# WORK TOOLS

## *112-1926* BUCKET GP-MULTIPURPOSE

**S/N: BXC1-UP; DSX1-UP**
**1.03 CU M (1.35 CU YD). WITH FORKS**
**PART OF 124-0489, 164-4659 BUCKET AR-MULTIPURPOSE**
**AN ATTACHMENT**

**SMCS-6104** **i01506130**

| NOTE | REF NO | GRAPHIC REF | PART NUMBER | QTY | PART NAME 1 2 3 4 5 6 (PRODUCT LEVEL) | SEE PAGE |
|---|---|---|---|---|---|---|
| | 1 | 1 | **3B-8489** | 2 | FITTING-GREASE | |
| | 2 | 1 | **4J-1888** | 2 | COTTER | |
| | 3 | 1 | **9R-4676** | 2 | PIN | |
| | 4 | 1 | **114-9262** | 1 | BULLDOZER AS | |
| | 5 | 1 | **104-6313** | 1 | BRACKET AS | |
| | 6 | 1 | **106-9388** | 2 | BRACKET | |
| | 7 | 1 | **104-6314** | 2 | BRACKET | |
| | 8 | 1 | **110-2861** | 4 | BRACKET | |
| | 9 | 1 | **114-3826** | 1 | BULLDOZER AS | |
| F | | 1 | **9R-5271** | 2 | BOSS (M10X1.5X25MM) | |
| | 10 | 1 | **9R-5786** | 1 | EDGE | |
| | 11 | 1 | **112-1775** | 2 | PLATE AS | |
| F | | 1 | **9R-1496** | 4 | BEARING-SLEEVE (40.196MM ID) | |
| | 12 | 1 | **126-4225** | 1 | CLAM AS | |
| | 13 | 1 | **9R-5313** | 1 | EDGE | |
| | 14 | 1 | **125-7117** | 1 | EDGE | |
| | 15 | 1 | **9R-4675** | 2 | BUSHING-TERMINAL | |
| | 16 | 1 | **9R-5294** | 2 | HINGE | |

F-NOT SHOWN

*112-1926* **BUCKET GP-MULTIPURPOSE** *(contd.)* **i01506130**

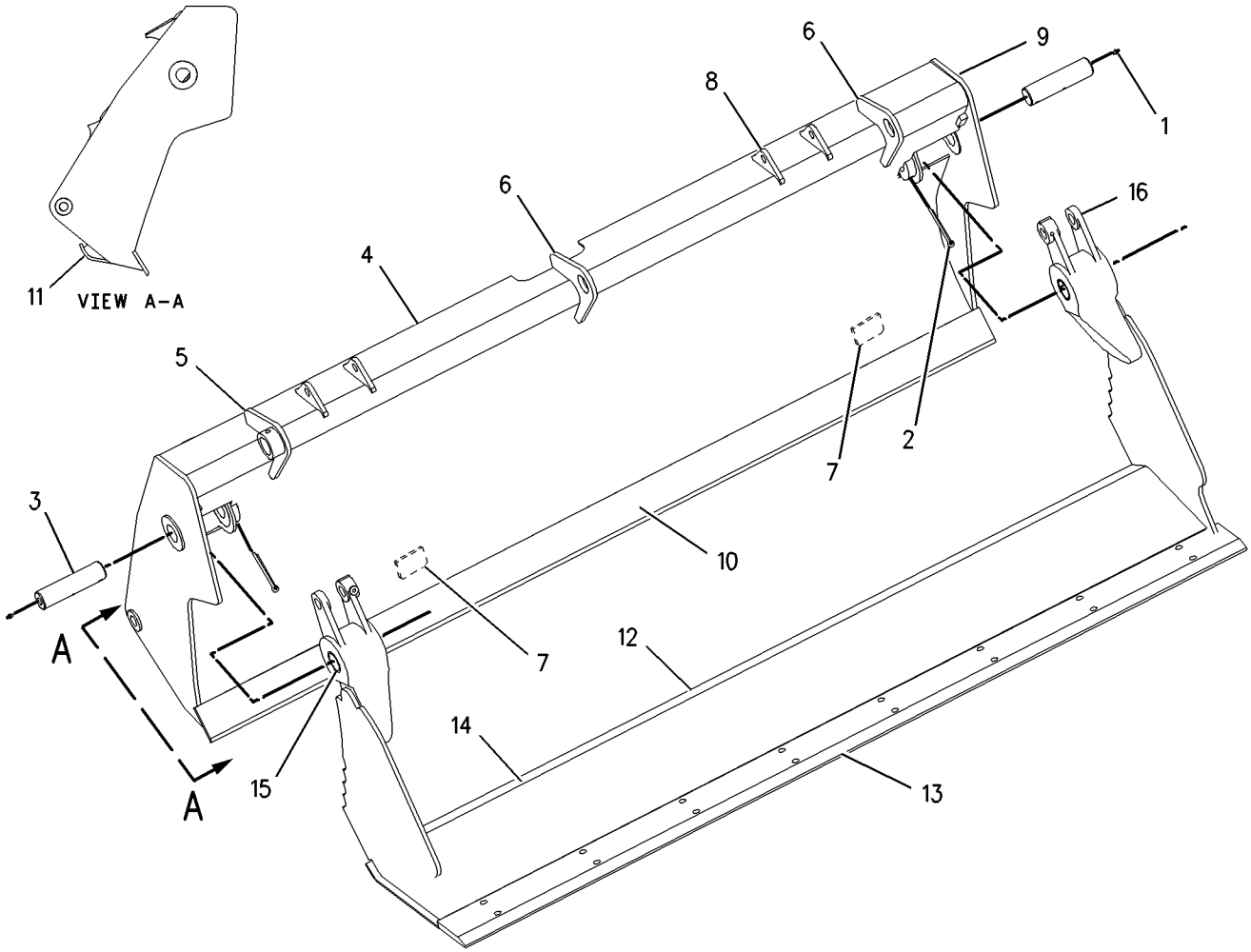


GRAPHIC #1 **<END>** g00781764

# WORK TOOLS

## 176-6247 COUPLER GP-QUICK

**S/N: BXC1-UP; DSX1-UP**
**PART OF 178-8849 COUPLER GP-QUICK**
**AN ATTACHMENT**

**SMCS-6129** **i01984111**

| NOTE | REF NO | GRAPHIC REF | PART NUMBER | QTY | PART NAME 1 2 3 4 5 6 (PRODUCT LEVEL) | SEE PAGE |
|---|---|---|---|---|---|---|
| | 1 | 1 | **176-6248** | 1 | COUPLER | |
| | 2 | 1 | **200-5921** | 1 | HOOK | |
| | 3 | 1 | **132-3725** | 1 | SPRING | |
| | 4 | 1 | **132-3721** | 1 | PIN AS (HOOK) | |
| | 5 | 1 | **132-3723** | 1 | LOCK PIN | |
| | 6 | 1 | **8T-0144** | 1 | PIN-SPRING | |
| | 7 | 1 | **091-5928** | 1 | FITTING | |
| | | | | | | |
| F | | | **132-3821** | 1 | LEVER-ACTUATING | |

F-NOT SHOWN

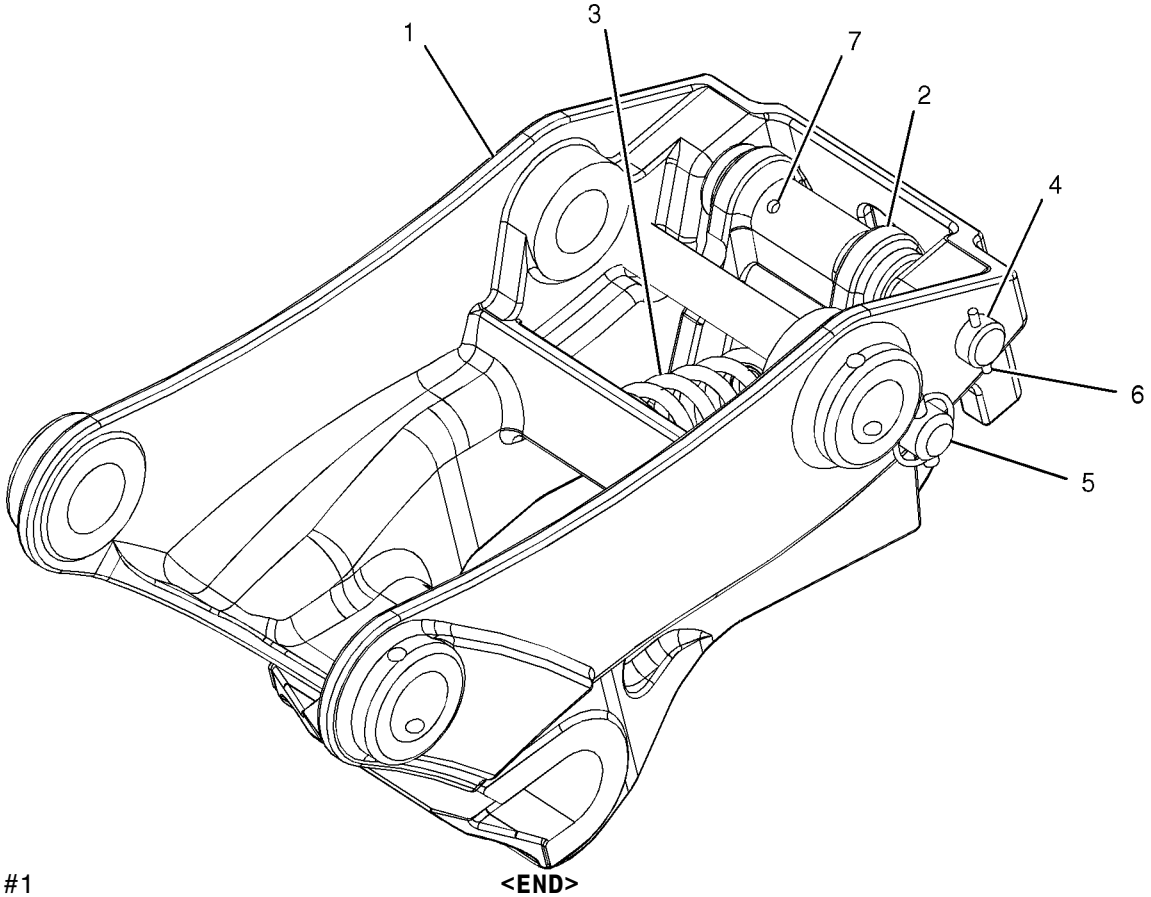


GRAPHIC #1 **<END>** g01028364

# WORK TOOLS

## 176-6251 COUPLER GP-QUICK

**S/N: BXC1-UP; DSX1-UP**
**PART OF 178-8850 COUPLER GP-QUICK**
**AN ATTACHMENT**

**SMCS-6129** **i01957304**

| NOTE | REF NO | GRAPHIC REF | PART NUMBER | QTY | PART NAME 1 2 3 4 5 6 (PRODUCT LEVEL) | SEE PAGE |
|---|---|---|---|---|---|---|
| | 1 | 1 | **176-6252** | 1 | COUPLER | |
| | 2 | 1 | **200-5921** | 1 | HOOK | |
| | 3 | 1 | **132-3725** | 1 | SPRING | |
| | 4 | 1 | **132-3721** | 1 | PIN AS (HOOK) | |
| | 5 | 1 | **132-3723** | 1 | LOCK PIN | |
| | 6 | 1 | **8B-7121** | 1 | FITTING-HYDRAULIC | |
| | 7 | 1 | **8T-0144** | 1 | PIN-SPRING | |
| | | | | | | |
| F | | | **132-3821** | 1 | LEVER-ACTUATING | |

F-NOT SHOWN

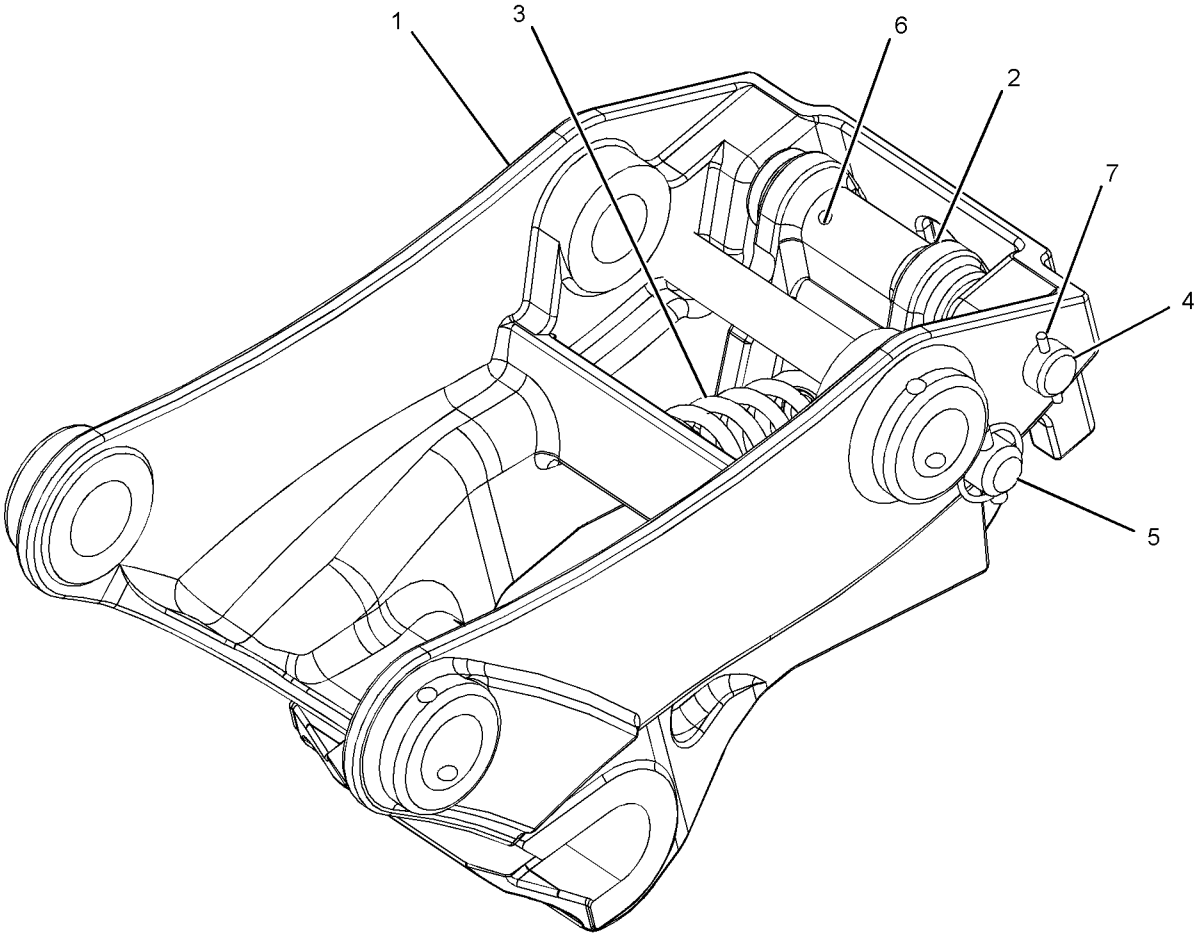


GRAPHIC #1 **<END>** g01017414

# WORK TOOLS

## *178-8849* COUPLER GP-QUICK

**S/N: BXC1-UP; DSX1-UP**
**AN ATTACHMENT**

**SMCS-6129** **i01674458**

| NOTE | REF NO | GRAPHIC REF | PART NUMBER | QTY | PART NAME 1 2 3 4 5 6 (PRODUCT LEVEL) | SEE PAGE |
|---|---|---|---|---|---|---|
| | 1 | 1 | **4J-1888** | 2 | PIN-COTTER | |
| | 2 | 1 | **132-3777** | 1 | PIN | |
| | 3 | 1 | **132-3778** | 1 | PIN | |
| Y | 4 | 1 | **176-6247** | 1 | COUPLER GP-QUICK | 677 |

Y-SEPARATE ILLUSTRATION

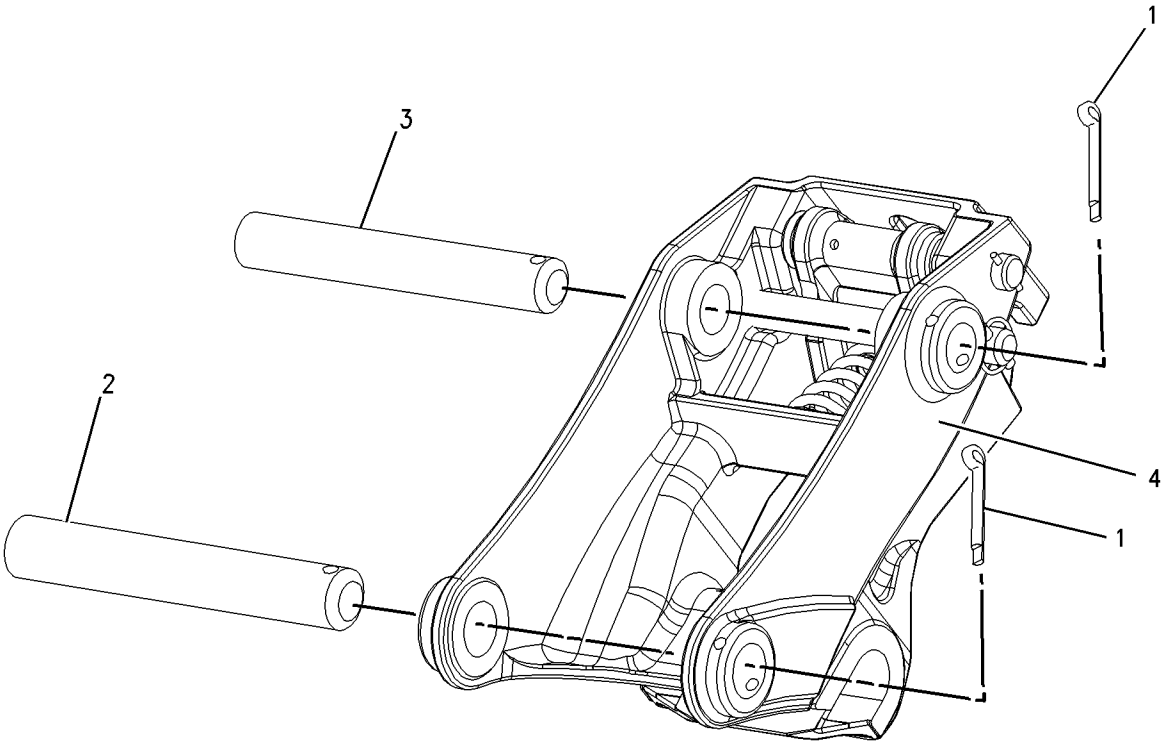


GRAPHIC #1 **<END>** g00864958

# WORK TOOLS

## *178-8850* COUPLER GP-QUICK

**S/N: BXC1-UP; DSX1-UP**

**AN ATTACHMENT**

**SMCS-6129** **i02003781**

| NOTE | REF NO | GRAPHIC REF | PART NUMBER | QTY | PART NAME 1 2 3 4 5 6 (PRODUCT LEVEL) | SEE PAGE |
|---|---|---|---|---|---|---|
| | 1 | 1 | **4J-1888** | 2 | PIN-COTTER | |
| | 2 | 1 | **132-3777** | 1 | PIN (345MM) | |
| | 3 | 1 | **132-3778** | 1 | PIN (330MM) | |
| Y | 4 | 1 | **176-6251** | 1 | COUPLER GP-QUICK | 678 |

Y-SEPARATE ILLUSTRATION

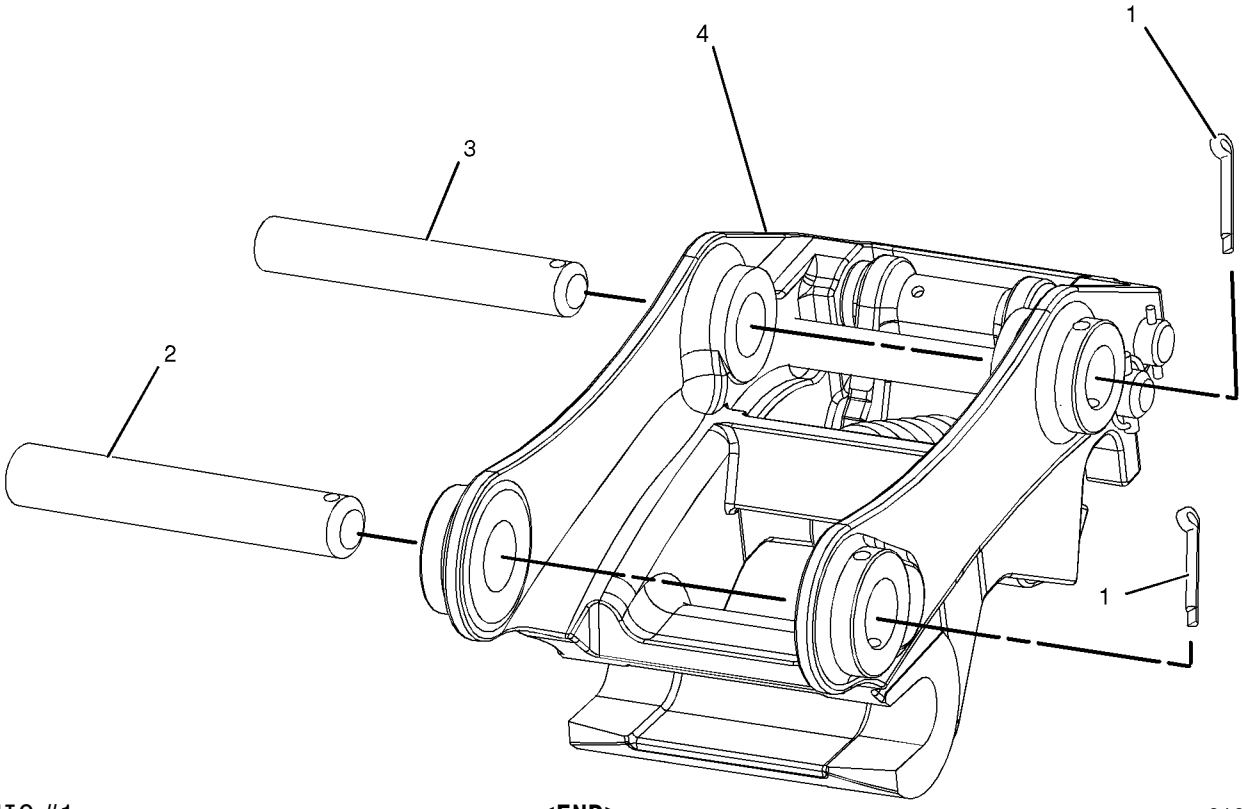


GRAPHIC #1 **<END>** g01036330

# WORK TOOLS

## 213-8000 COUPLER GP-QUICK

**S/N: BXC1-UP; DSX1-UP**
**AN ATTACHMENT**

**SMCS-6129** **i01670207**

| NOTE | REF NO | GRAPHIC REF | PART NUMBER | QTY | PART NAME 1 2 3 4 5 6 (PRODUCT LEVEL) | SEE PAGE |
|---|---|---|---|---|---|---|
| Y | 1 | 1 | **213-8008** | 1 | COUPLER GP-QUICK | 682 |
| | 2 | 1 | **216-7374** | 2 | PIN | |
| | 3 | 1 | **4J-1888** | 2 | PIN-COTTER | |

Y-SEPARATE ILLUSTRATION

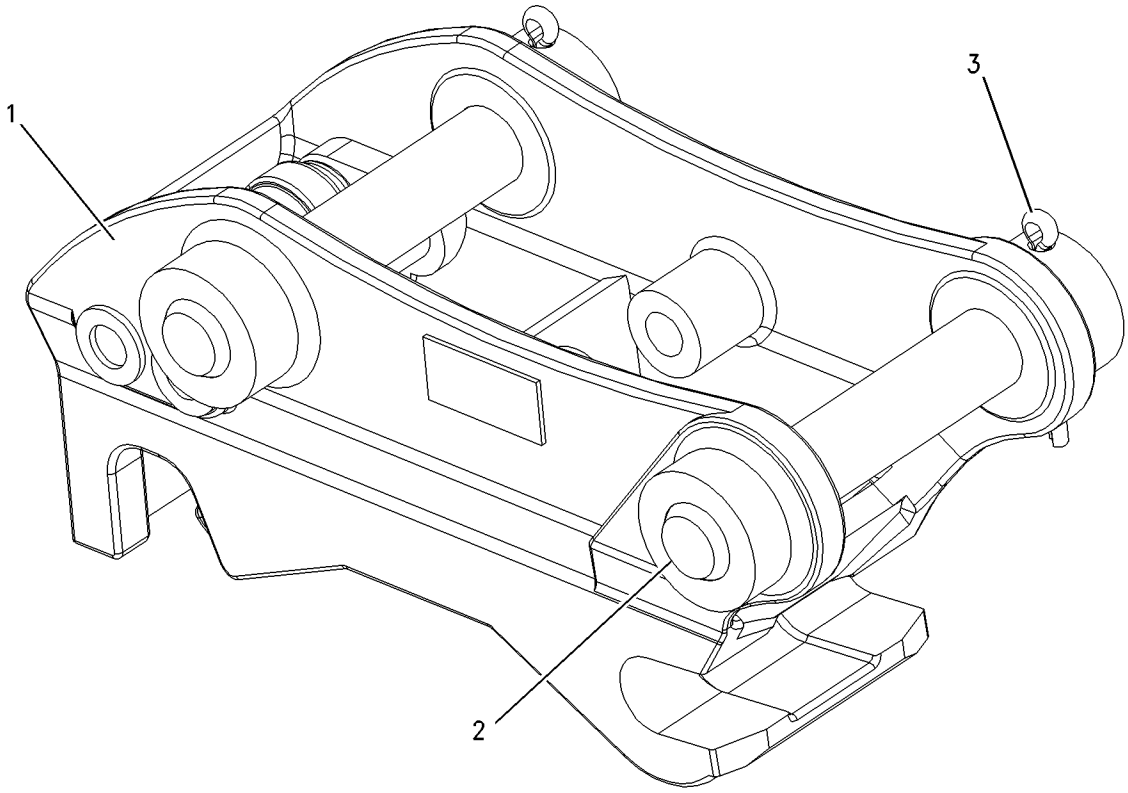


GRAPHIC #1 **<END>** g00863381

# WORK TOOLS

## 213-8008 COUPLER GP-QUICK

**S/N: BXC1-UP; DSX1-UP**
**PART OF 213-8000 COUPLER GP-QUICK**
**AN ATTACHMENT**

**SMCS-6129** **i01739273**

| NOTE | REF NO | GRAPHIC REF | PART NUMBER | QTY | PART NAME 1 2 3 4 5 6 (PRODUCT LEVEL) | SEE PAGE |
|---|---|---|---|---|---|---|
| | 1 | 1 | **091-5928** | 1 | FITTING | |
| | 2 | 1 | **216-7377** | 1 | SPRING | |
| | 3 | 1 | **215-1216** | 1 | COUPLER | |
| | 4 | 1 | **215-1217** | 1 | HOOK | |
| | 5 | 1 | **216-7375** | 1 | PIN AS | |
| | 6 | 1 | **216-7376** | 1 | PIN AS | |
| | | | | | | |
| F | | 1 | **132-3821** | 1 | LEVER-ACTUATING | |

F-NOT SHOWN

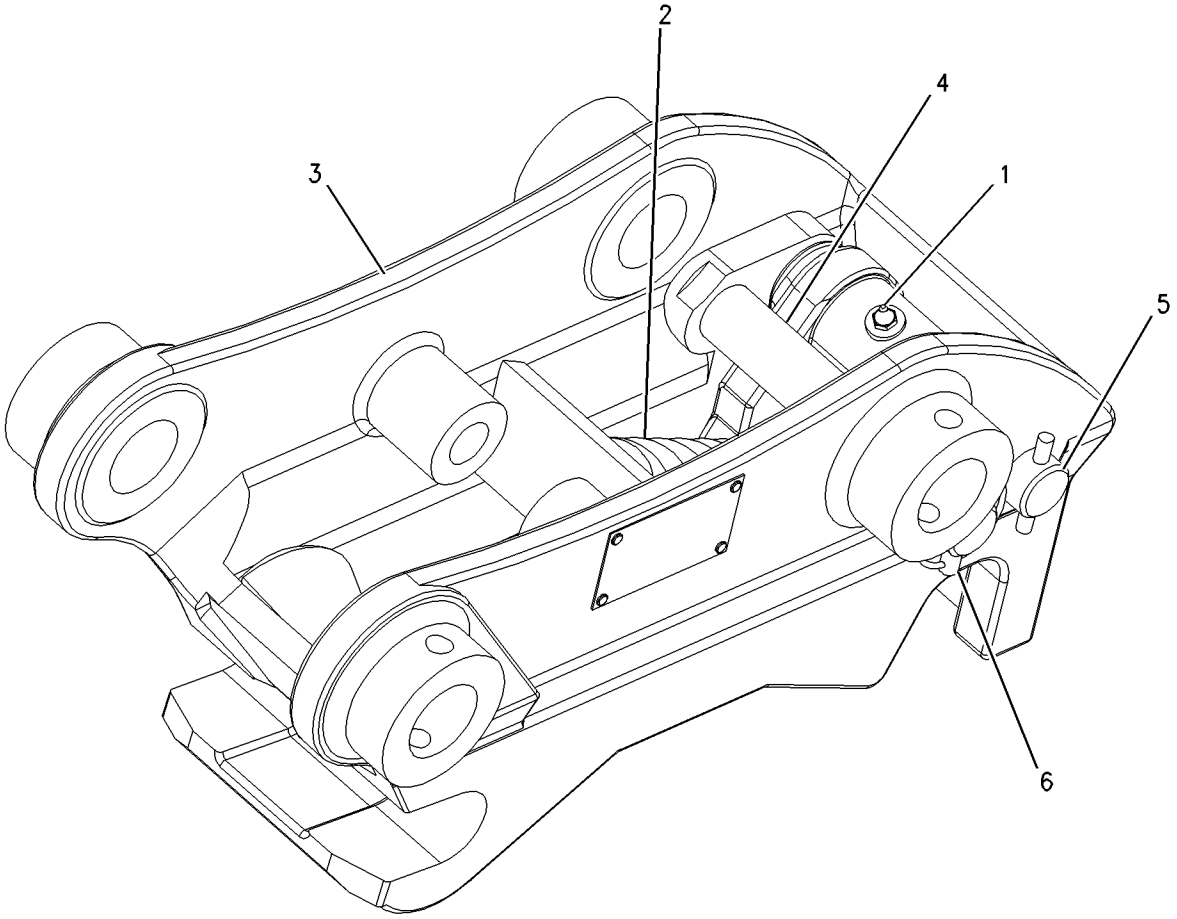


GRAPHIC #1 **<END>** g00890825

# WORK TOOLS

## *9R-5320* EDGE GP-CUTTING

**S/N: BXC1-UP; DSX1-UP**
**AN ATTACHMENT**

**SMCS-6801** **i00530080**

| NOTE | REF NO | GRAPHIC REF | PART NUMBER | QTY | PART NAME 1 2 3 4 5 6 (PRODUCT LEVEL) | SEE PAGE |
|---|---|---|---|---|---|---|
| | 1 | 1 | **118-7110** | 2 | EDGE-CUTTING | |
| | 2 | 1 | **4F-3657** | 8 | BOLT-PLOW | |
| | 3 | 1 | **4K-0367** | 8 | NUT (5/8-11 THD) | |
| | 4 | 1 | **8T-4122** | 8 | WASHER (3.5MM THK) | |

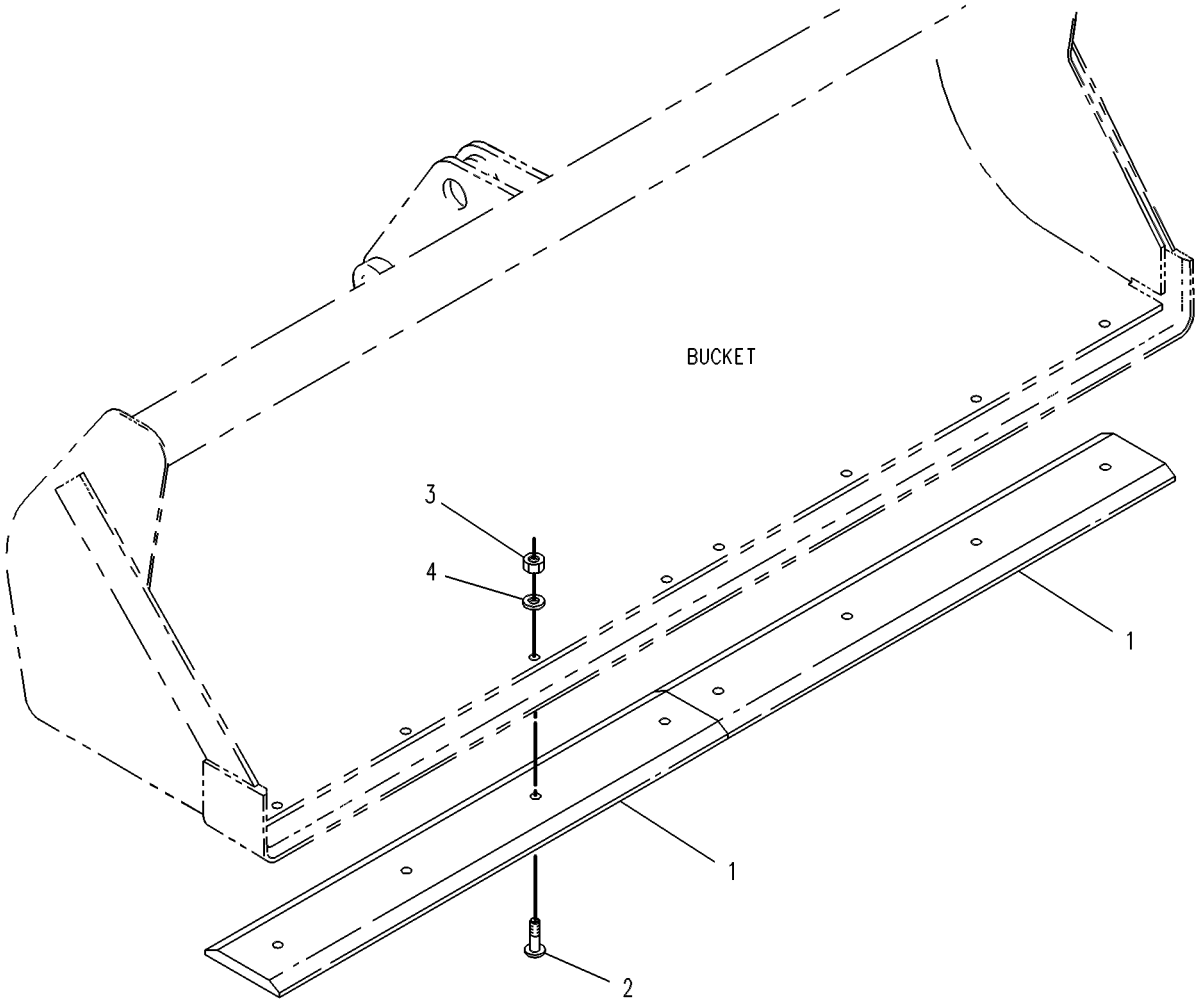


GRAPHIC #1 **<END>** g00131376

# WORK TOOLS

## *9R-5321* EDGE GP-CUTTING

**S/N: BXC1-UP; DSX1-UP**
**AN ATTACHMENT**

**SMCS-6801** **i00530701**

| NOTE | REF NO | GRAPHIC REF | PART NUMBER | QTY | PART NAME 1 2 3 4 5 6 (PRODUCT LEVEL) | SEE PAGE |
|---|---|---|---|---|---|---|
| | 1 | 1 | **9W-8215** | 2 | EDGE-CUTTING | |
| | 2 | 1 | **3F-5108** | 8 | BOLT-PLOW | |
| | 3 | 1 | **4K-0367** | 8 | NUT (5/8-11 THD) | |
| | 4 | 1 | **8T-4122** | 8 | WASHER (3.5MM THK) | |

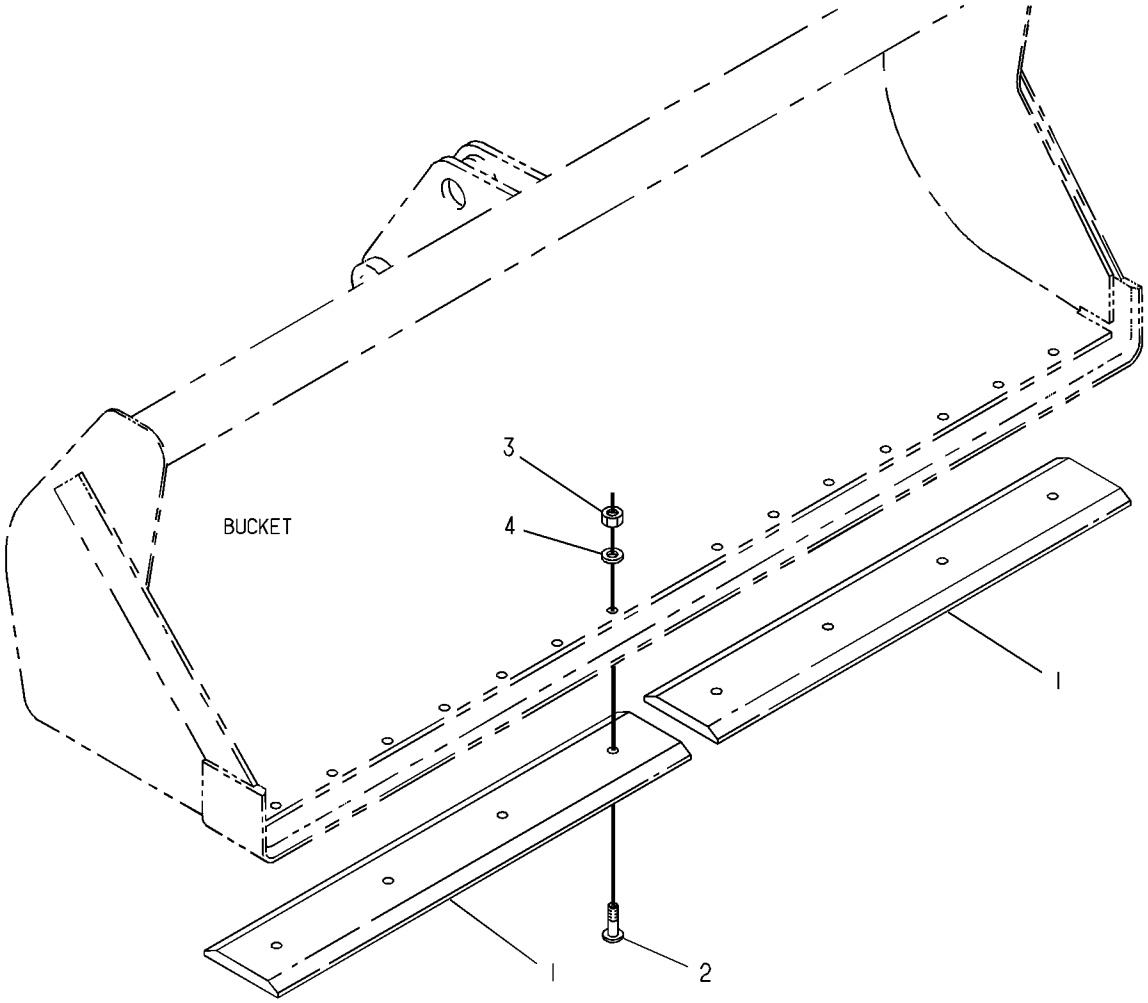


GRAPHIC #1 **<END>** g00130834

# WORK TOOLS

## *112-0942* FORK AR

**S/N: BXC1-UP; DSX1-UP**

**AN ATTACHMENT**

**SMCS-6405** **i00755995**

| NOTE | PART NUMBER | QTY | PART NAME 1 2 3 4 5 6 (PRODUCT LEVEL) | SEE PAGE |
|---|---|---|---|---|
| Y | *104-6310* | 1 | FORK GP | 686 |
| Y | *108-1587* | 1 | MOUNTING GP-FORK | 693 |

Y-SEPARATE ILLUSTRATION

**<END>**

# WORK TOOLS

## *104-6310* FORK GP

**S/N: BXC1-UP; DSX1-UP**

**PART OF 111-8635, 112-0939, 124-0487, 124-0489 BUCKET AR-MULTIPURPOSE, 112-0942 FORK AR**

**AN ATTACHMENT**

**SMCS-6405** **i01114480**

| NOTE | REF NO | GRAPHIC REF | PART NUMBER | QTY | PART NAME 1 2 3 4 5 6 (PRODUCT LEVEL) | SEE PAGE |
|---|---|---|---|---|---|---|
| | 1 | 1 | **104-6311** | 2 | BRACKET AS | |
| | 2 | 1 | **104-6312** | 2 | FORK AS | |
| | 3 | 1 | **104-6316** | 1 | PIN | |
| | 4 | 1 | **104-6317** | 2 | PIN | |
| | 5 | 1 | **4J-1888** | 1 | COTTER | |
| | 6 | 1 | **9R-0109** | 4 | WASHER (3MM THK) | |
| | 7 | 1 | **112-1776** | 2 | PIN AS | |
| | 8 | 1 | **6V-8144** | 4 | RING | |
| | 9 | 1 | **5D-8159** | 2 | PIN AS | |

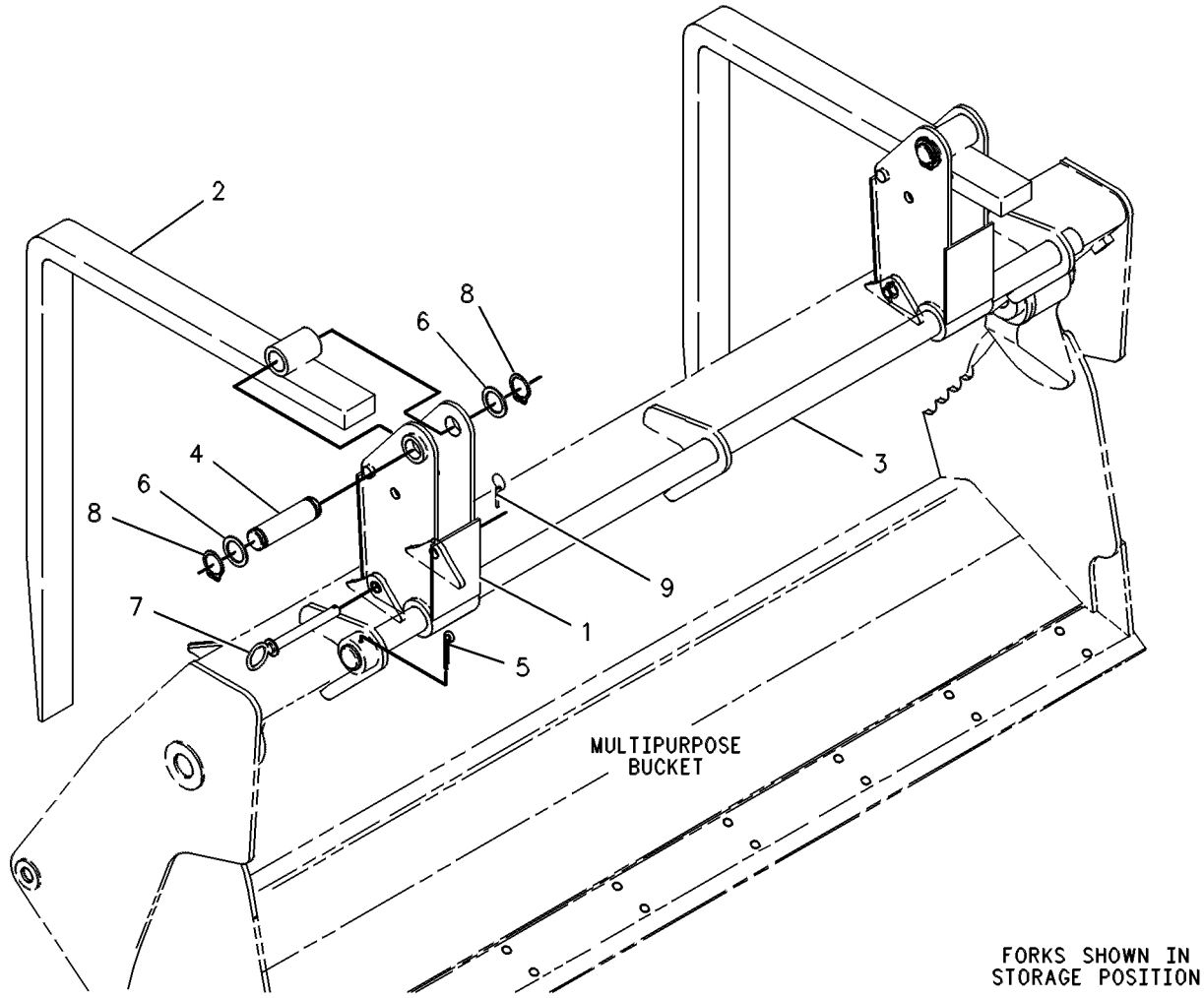


GRAPHIC #1 **<END>** g00131084

# WORK TOOLS

## *204-5261* GUARD GP-BUCKET—FRONT

**S/N: BXC1-UP; DSX1-UP**

**PART OF 206-3409, 206-4924 CONVERSION AR-CERTIFICATION, 206-3407 GUARD GP-BUCKET AN ATTACHMENT**

**SMCS-6001, 6800, 6805** **i01618702**

| NOTE | REF NO | GRAPHIC REF | PART NUMBER | QTY | PART NAME 1 2 3 4 5 6 (PRODUCT LEVEL) | SEE PAGE |
|---|---|---|---|---|---|---|
| | 1 | 1 | **101-4411** | 2 | RETAINER AS | |
| | | | | | (EACH INCLUDES) | |
| | | 1 | **101-4412** | 1 | CHAIN | |
| | | 1 | **101-4413** | 1 | SPRING | |
| | | 1 | **101-4414** | 1 | HOOK AS | |
| | 2 | 1 | **204-5258** | 1 | PLATE AS | |
| | 3 | 1 | **204-5259** | 1 | PLATE AS | |
| | 4 | 1 | **204-5260** | 1 | PLATE | |
| | 5 | 1 | **5P-4115** | 4 | WASHER-HARD (7.2X19X2MM THK) | |
| M | 6 | 1 | **8T-4171** | 4 | BOLT (M6X1X12MM) | |

M-METRIC PART

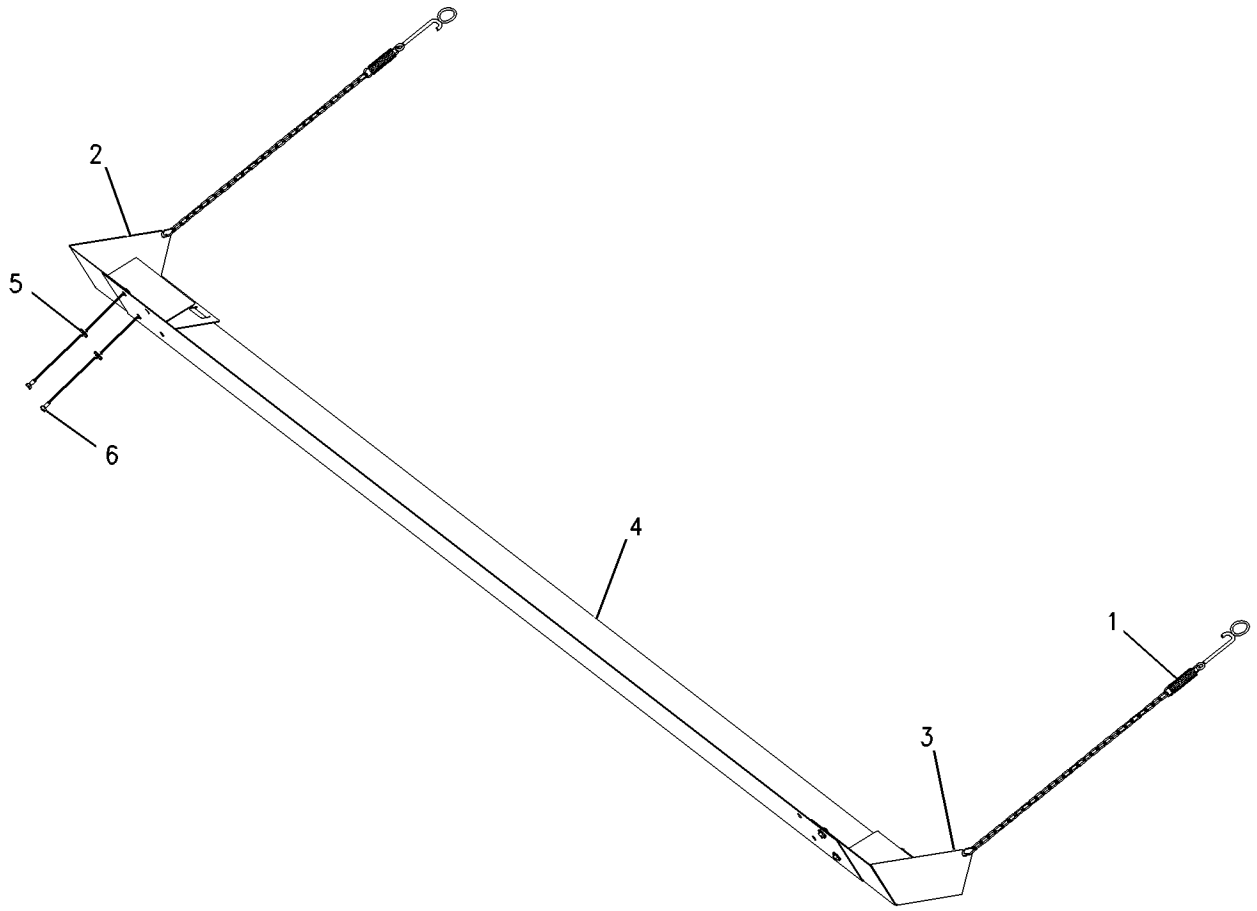


GRAPHIC #1 **<END>** g00837989

# *206-3407* GUARD GP-BUCKET—FRONT

**S/N: BXC1-UP; DSX1-UP**
**PART OF 190-2803, 190-6413 CONVERSION AR-CERTIFICATION**
**AN ATTACHMENT**

**SMCS-6001, 6800, 6805** **i01614336**

| NOTE | REF NO | GRAPHIC REF | PART NUMBER | QTY | PART NAME 1 2 3 4 5 6 (PRODUCT LEVEL) | SEE PAGE |
|---|---|---|---|---|---|---|
| | 1 | 1 | **101-4415** | 1 | REFLECTOR | |
| Y | 2 | 1 | *204-5261* | 1 | GUARD GP-BUCKET | 687 |

Y-SEPARATE ILLUSTRATION

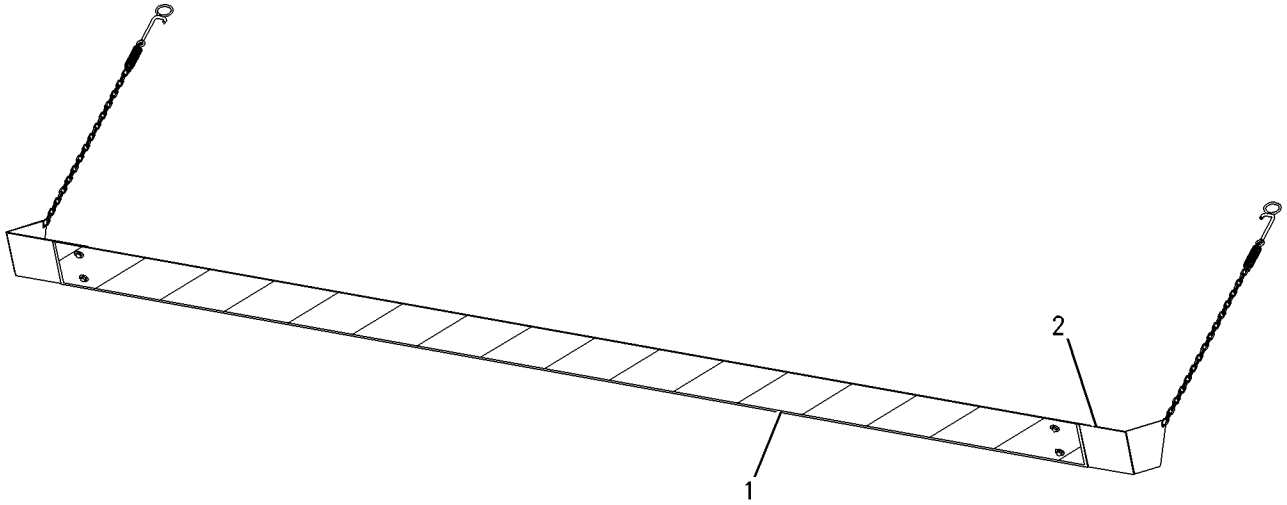


GRAPHIC #1 **<END>** g00837957

# WORK TOOLS

## *119-4595* MOUNTING GP-BUCKET—LOADER

**S/N: BXC1-UP; DSX1-UP**

**PART OF 185-0060, 185-0061, 185-0062, 185-0063 HYDRAULIC AR**

**AN ATTACHMENT**

**SMCS-6101** **i00723819**

| NOTE | REF NO | GRAPHIC REF | PART NUMBER | QTY | PART NAME 1 2 3 4 5 6 (PRODUCT LEVEL) | SEE PAGE |
|---|---|---|---|---|---|---|
| | 1 | 1 | **3B-8489** | 2 | FITTING-GREASE (1/8-27 THD) | |
| | 2 | 1 | **6V-8144** | 2 | RING | |
| | 3 | 1 | **9R-0109** | 8 | WASHER (3MM THK) | |
| | 4 | 1 | **119-4594** | 4 | WASHER (1MM THK) | |
| | 5 | 1 | **130-1918** | 2 | PIN AS | |
| | 6 | 1 | **111-4339** | 4 | LINK | |

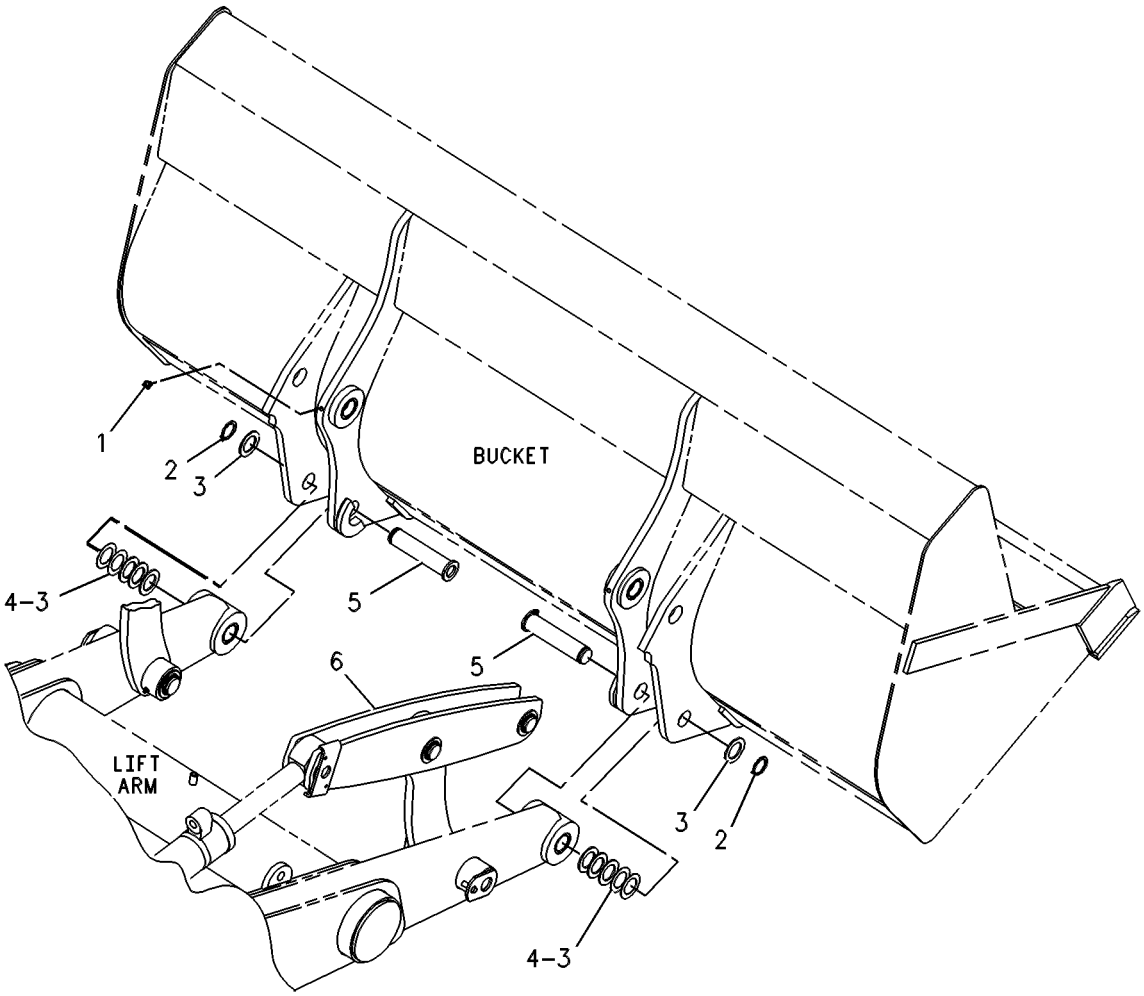


GRAPHIC #1 **<END>** g00287865

# WORK TOOLS

## *137-3848* MOUNTING GP-BUCKET—BACKHOE—QUICK COUPLER

**S/N: BXC1-UP; DSX1-UP**

**AN ATTACHMENT**

**SMCS-6101** **i01179524**

| NOTE | REF NO | GRAPHIC REF | PART NUMBER | QTY | PART NAME 1 2 3 4 5 6 (PRODUCT LEVEL) | SEE PAGE |
|---|---|---|---|---|---|---|
| | 1 | 1 | **9R-0158** | 5 | WASHER (3MM THK) | |
| | 2 | 1 | **3B-5319** | 4 | COTTER | |
| | 3 | 1 | **9R-6162** | 1 | PIN | |
| | 4 | 1 | **9R-1510** | 2 | WASHER (4MM THK) | |
| | 5 | 1 | **154-5279** | 1 | PIN | |

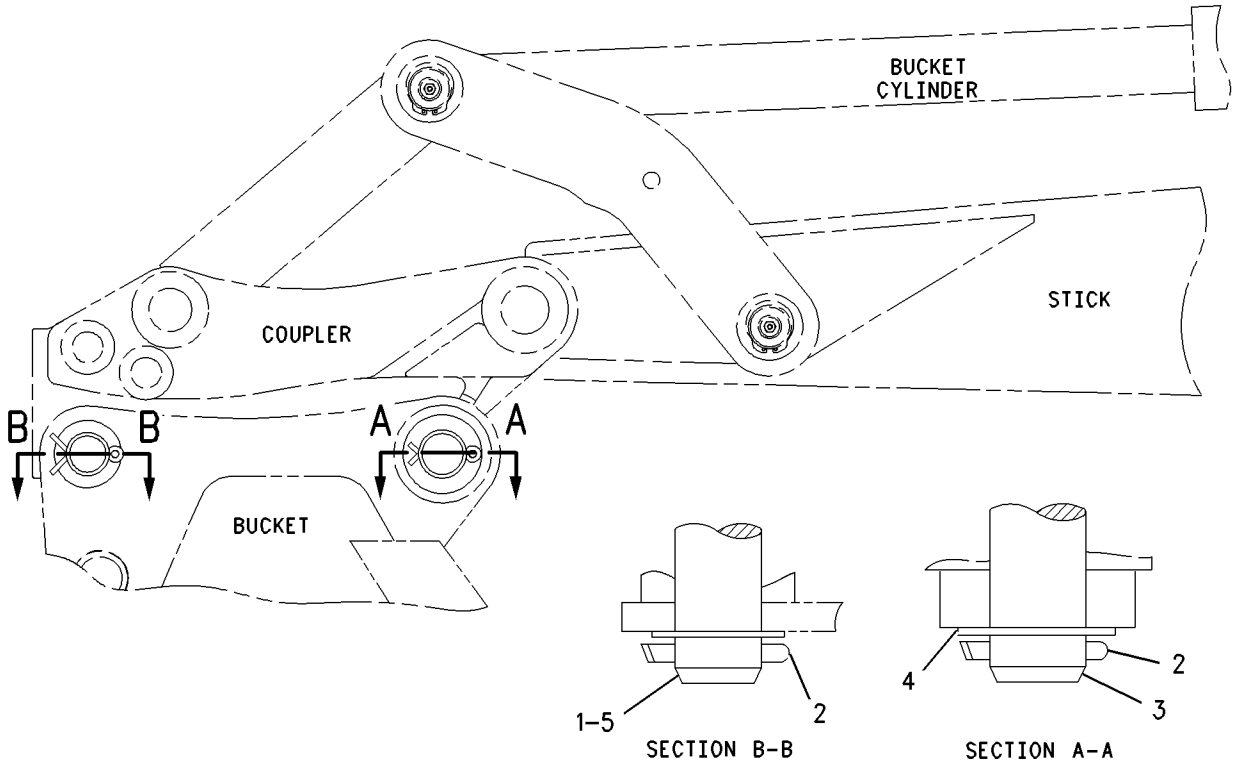


GRAPHIC #1 **<END>** g00631428

# WORK TOOLS

## *178-3593* MOUNTING GP-BUCKET—BACKHOE—QUICK COUPLER

**S/N: BXC1-UP; DSX1-UP**
**FOR USE WITH ALL BUCKETS EXCEPT 12 INCH**
**AN ATTACHMENT**

**SMCS-6101** **i01179790**

| NOTE | PART NUMBER | QTY | PART NAME 1 2 3 4 5 6 (PRODUCT LEVEL) | SEE PAGE |
|---|---|---|---|---|
| | **3B-5319** | 4 | COTTER | |
| | **154-5279** | 1 | PIN | |
| | **154-5280** | 1 | PIN | |
| | **9R-0158** | 5 | WASHER (3MM THK) | |
| | **9R-1510** | 5 | WASHER (4MM THK) | |

**<END>**

# *223-1882* MOUNTING GP-BUCKET—BACKHOE

**S/N: BXC1-UP; DSX1-UP**

**AN ATTACHMENT**

**SMCS-6101** **i01801870**

| NOTE | REF NO | GRAPHIC REF | PART NUMBER | QTY | PART NAME 1 2 3 4 5 6 (PRODUCT LEVEL) | SEE PAGE |
|---|---|---|---|---|---|---|
| | 1 | 1 | **9R-0158** | 2 | WASHER (46X69X3MM THK) | |
| | 2 | 1 | **9R-9105** | 2 | PIN AS | |
| | 3 | 1 | **3B-5319** | 2 | PIN-COTTER | |

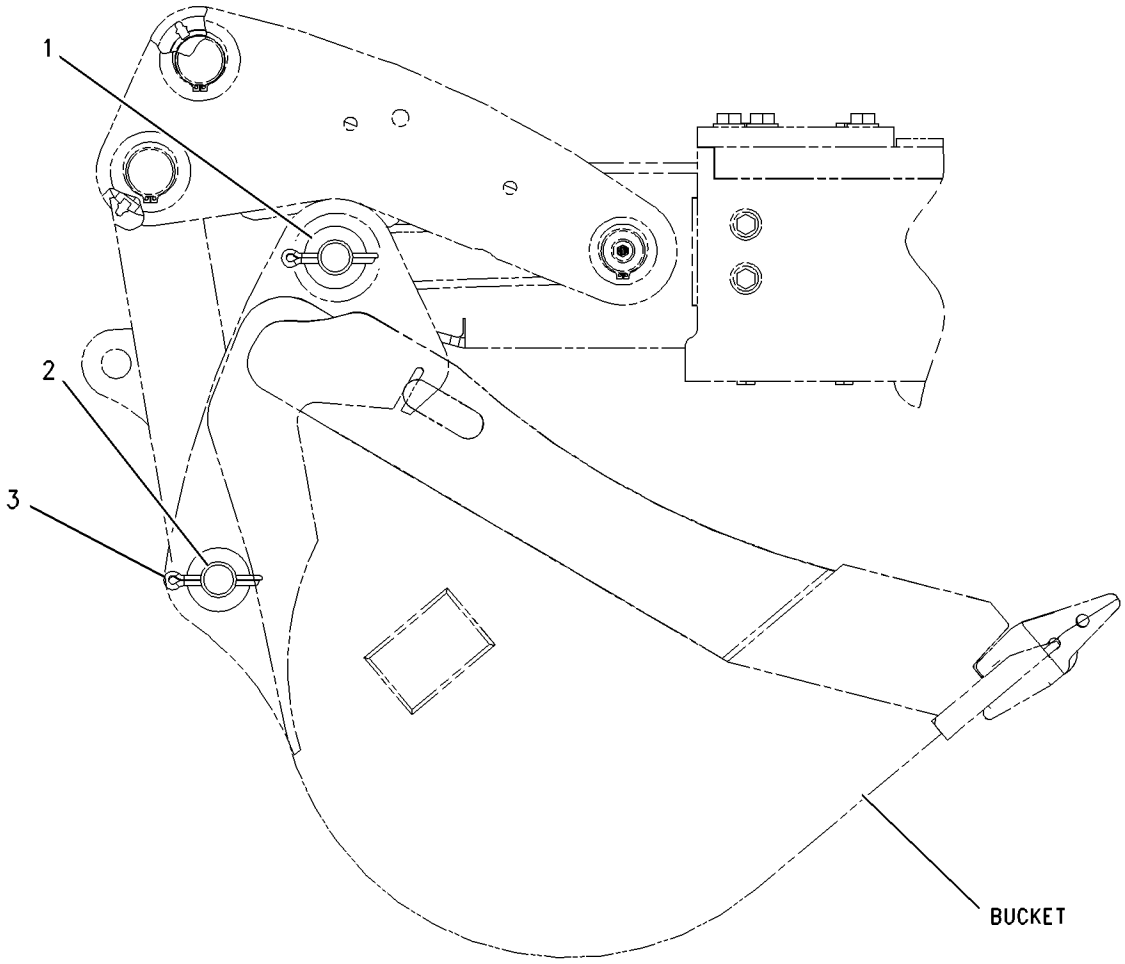


GRAPHIC #1 **<END>** g00925340

# WORK TOOLS

## *108-1587* MOUNTING GP-FORK

**S/N: BXC1-UP; DSX1-UP**
**PART OF 112-0942 FORK AR**
**AN ATTACHMENT**

**SMCS-6405** **i00530466**

| NOTE | REF NO | GRAPHIC REF | PART NUMBER | QTY | PART NAME 1 2 3 4 5 6 (PRODUCT LEVEL) | SEE PAGE |
|---|---|---|---|---|---|---|
| | 1 | 1 | **110-2861** | 4 | BRACKET | |
| | 2 | 1 | **104-6313** | 1 | BRACKET AS | |
| | 3 | 1 | **104-6314** | 2 | BRACKET | |
| | 4 | 1 | **106-9388** | 2 | BRACKET | |

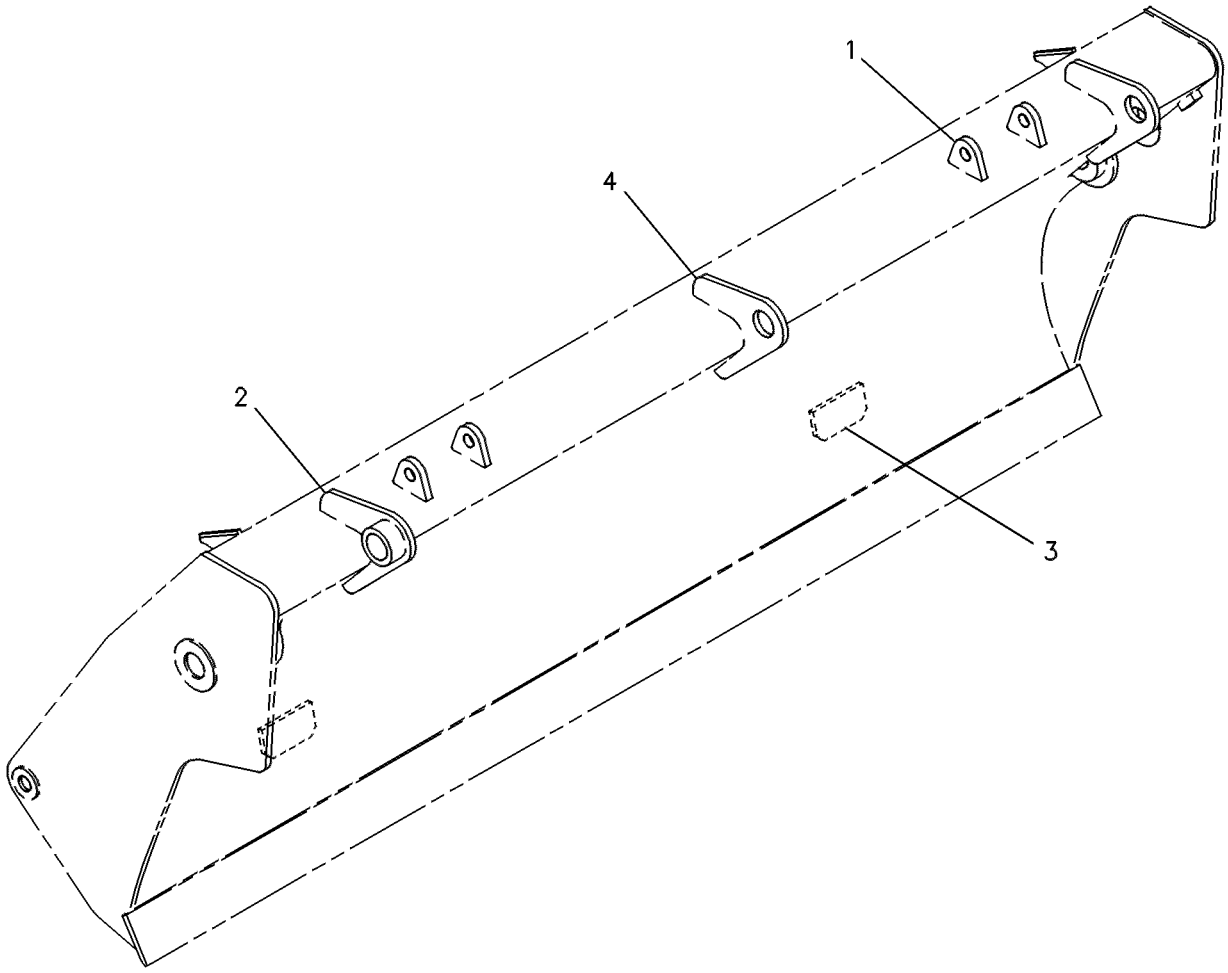


GRAPHIC #1 **<END>** g00131197

# WORK TOOLS

## *119-1530* SHIPPING AR-BUCKET

**S/N: BXC1-UP; DSX1-UP**
**TRANSPORT (NO BUCKET OPTION)**
**AN ATTACHMENT**

**SMCS-7505** **i00756016**

| NOTE | PART NUMBER | QTY | PART NAME 1 2 3 4 5 6 (PRODUCT LEVEL) | SEE PAGE |
|---|---|---|---|---|
| Y | *120-9289* | 1 | BRACKET GP-TRANSPORT | 590 |

Y-SEPARATE ILLUSTRATION

**<END>**

# WORK TOOLS

## *177-4903* STOP GP-BUCKET—BACKHOE

**S/N: BXC1-UP; DSX1-UP**

**AN ATTACHMENT**

**SMCS-6001** **i01876870**

| NOTE | REF NO | GRAPHIC REF | PART NUMBER | QTY | PART NAME 1 2 3 4 5 6 (PRODUCT LEVEL) | SEE PAGE |
|---|---|---|---|---|---|---|
| | 1 | 1 | **178-4200** | 1 | STOP AS | |
| | 2 | 1 | **180-3773** | 1 | STOP AS | |
| | 3 | 1 | **7X-7729** | 4 | WASHER (11X25X3MM THK) | |
| M | 4 | 1 | **8T-0389** | 4 | LOCKNUT (M10X1.5 THD) | |
| M | 5 | 1 | **8T-4182** | 4 | BOLT (M10X1.5X45MM) | |

M-METRIC PART

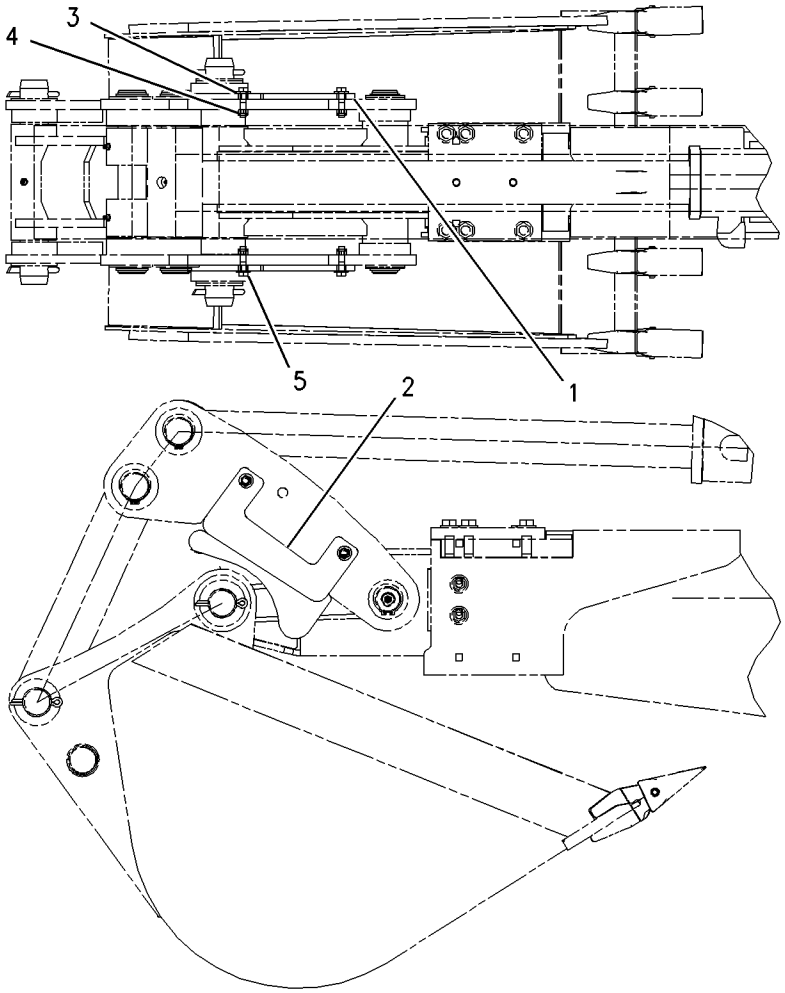


GRAPHIC #1 **<END>** g00954944

# WORK TOOLS

## *177-4904* STOP GP-BUCKET—BACKHOE

**S/N: BXC1-UP; DSX1-UP**

**AN ATTACHMENT**

**SMCS-6001** **i01211361**

| NOTE | REF NO | GRAPHIC REF | PART NUMBER | QTY | PART NAME 1 2 3 4 5 6 (PRODUCT LEVEL) | SEE PAGE |
|---|---|---|---|---|---|---|
| | 1 | 1 | **178-4201** | 1 | STOP AS | |
| | 2 | 1 | **180-3774** | 1 | STOP AS | |
| | 3 | 1 | **7X-7729** | 4 | WASHER (3MM THK) | |
| M | 4 | 1 | **8T-0389** | 4 | LOCKNUT (M10X1.5 THD) | |
| M | 5 | 1 | **8T-4182** | 4 | BOLT (M10X1.5X45MM) | |

M-METRIC PART

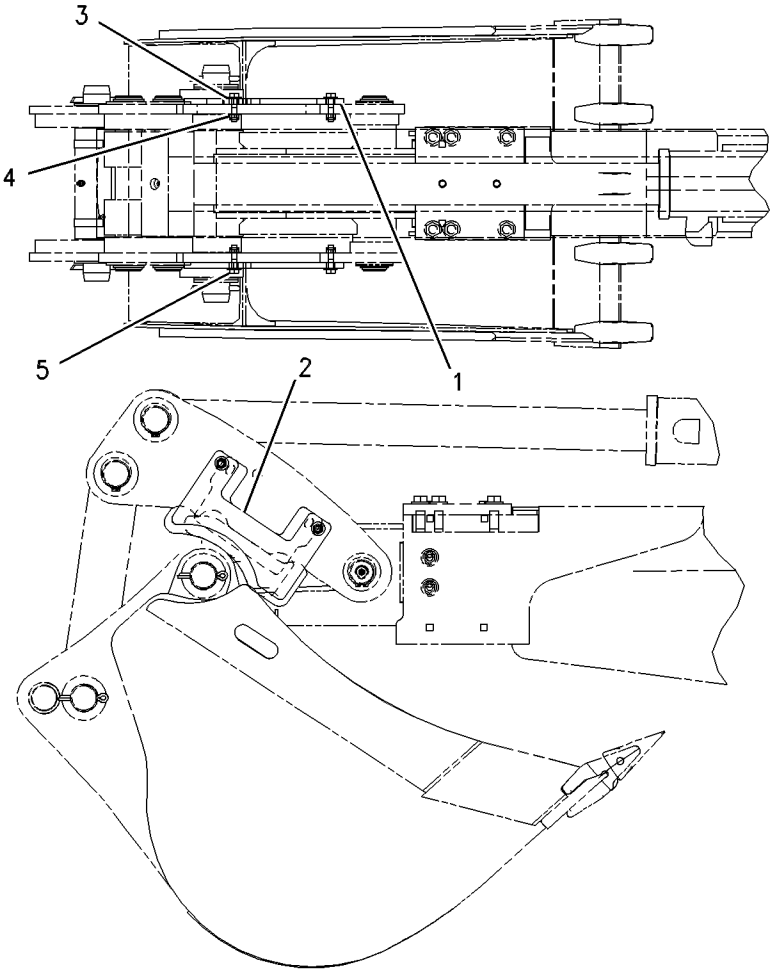


GRAPHIC #1 **<END>** g00655903

# WORK TOOLS

## *9R-5866* TOOTH GP-UNI

**S/N: BXC1-UP; DSX1-UP**
**FOR USE WITH LOADER BUCKETS**
**AN ATTACHMENT**

**SMCS-6822** **i01789850**

| NOTE | REF NO | GRAPHIC REF | PART NUMBER | QTY | PART NAME 1 2 3 4 5 6 (PRODUCT LEVEL) | SEE PAGE |
|---|---|---|---|---|---|---|
| | 1 | 1 | **135-8203** | 8 | TOOTH-UNI | |
| | 2 | 1 | **4F-3657** | 16 | BOLT-PLOW (5/8-11X2.75 IN) | |
| | 3 | 1 | **4K-0367** | 16 | NUT-FULL (5/8-11 THD) | |

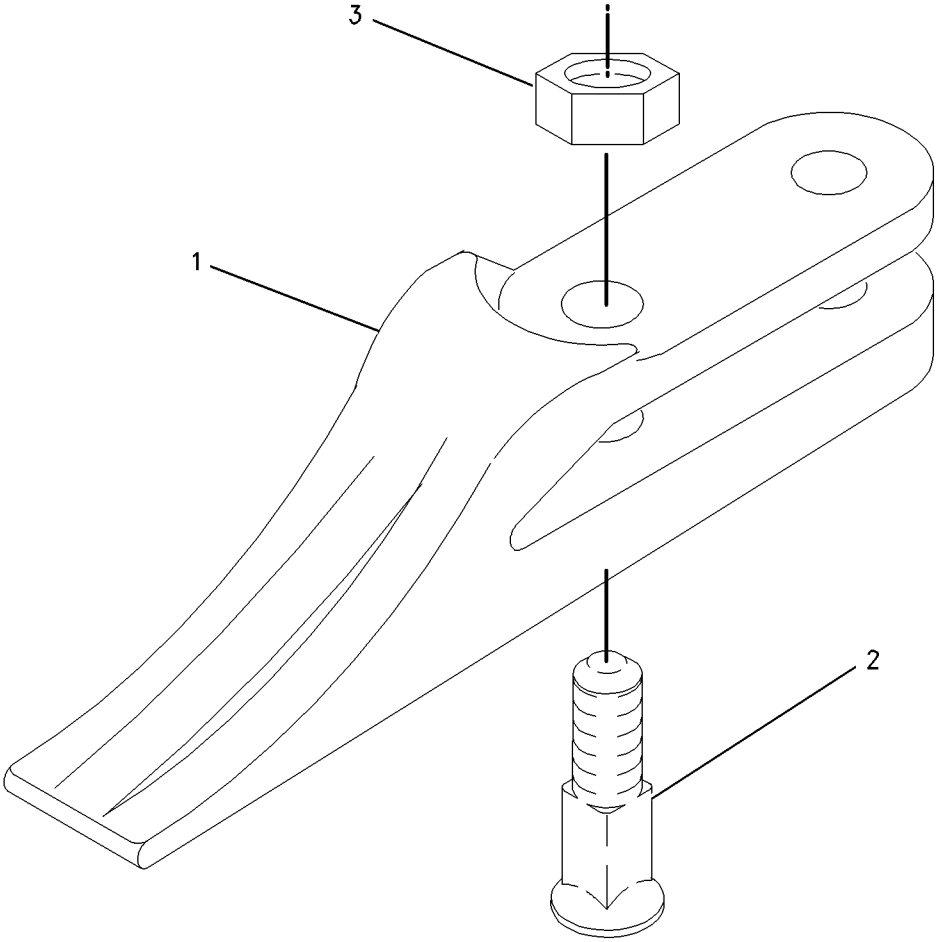


GRAPHIC #1 **<END>** g00915931

# OPERATOR STATION

## *164-1032* AIR CONDITIONER & MOUNTING GP

**S/N: BXC1-UP; DSX1-UP**
**PART OF 214-7007 CAB AR, 214-7009 CAB AR-ENCLOSED ROPS**
**AN ATTACHMENT**

**SMCS-7320** **i01981929**

| NOTE | REF NO | GRAPHIC REF | PART NUMBER | QTY | PART NAME 1 2 3 4 5 6 (PRODUCT LEVEL) | SEE PAGE |
|---|---|---|---|---|---|---|
| | 1 | 1 | **6L-4725** | 2 | CLAMP-HOSE | |
| | 2 | 1 | **8Y-5737** | 1 | CLAMP | |
| | 3 | 1 | **8Y-6967** | 1 | LOUVER AS | |
| | 4 | 1 | **9M-7959** | 1 | CLAMP (HOSE) | |
| | 5 | 1 | **9R-9901** | 5 | FASTENER (CLIP) | |
| | 6 | 1 | **110-6109** | 1 | KNOB-CONTROL | |
| | 7 | 1 | **130-4832** | 2 | SCREW (8-18X.39 IN) | |
| | 8 | 1 | **164-1042** | 1 | DUCT-OUTLET | |
| | 9 | 1 | **164-1196** | 1 | CABLE AS | |
| | | 1 | **143-8874** | 1 | BOOT | |
| Y | 10 | 1 | **170-0075** | 1 | AIR CONDITIONER GP | 700 |
| | 11 | 1 | **184-6560** | 1 | BRACKET | |
| | 12 | 1 | **184-6561** | 1 | HOSE-AIR | |
| | 13 | 1 | **184-6564** | 1 | GASKET | |
| | 14 | 1 | **184-6567** | 1 | GASKET | |
| | 15 | 1 | **184-6572** | 1 | INSULATION | |
| | 16 | 1 | **184-6573** | 1 | INSULATION | |
| | 17 | 1 | **184-6574** | 1 | INSULATION | |
| | 18 | 1 | **190-5132** | 1 | FILM-CONTROL (AIR CONDITIONER) | |
| | 19 | 1 | **194-5622** | 1 | VALVE AS (WATER) | |
| | | 1 | **6V-6717** | 1 | SCREW-WASHER HEAD (8-32X.375 IN) | |
| | | 1 | **124-0312** | 2 | SCREW-PAN HEAD (8-16X.32 IN) | |
| | 20 | 1 | **206-7512** | 1 | COVER | |
| | 21 | 1 | **206-7513** | 2 | BRACKET | |
| | 22 | 1 | **206-7514** | 1 | FILTER | |
| E | 23 | 1 | **5P-3915** | | HOSE (30CM) | |
| | 24 | 1 | **228-0297** | 1 | PLATE AS | |
| M | | 1 | **6V-9632** | 1 | NUT-WELD (M6X1 THD) | |
| | 25 | 1 | **228-0298** | 1 | DUCT-AIR | |
| | 26 | 1 | **228-0560** | 1 | SEAL | |
| | 27 | 1 | **228-4284** | 1 | DUCT GP-AIR | |
| | | 1 | **104-2091** | 8 | SCREW-FLAT HEAD (6-20X0.5 IN) | |
| | | 1 | **164-8473** | 2 | LOUVER AS | |
| | 28 | 1 | **2H-3920** | 1 | LOCKWASHER | |
| | 29 | 1 | **5P-4115** | 1 | WASHER-HARD (7.2X19X2MM THK) | |
| M | 30 | 1 | **9X-2042** | 3 | SCREW-TRUSS HEAD (M6X1X12MM) | |
| M | 31 | 1 | **9X-2044** | 2 | SCREW-TRUSS HEAD (M6X1X16MM) | |
| M | 32 | 1 | **9X-2045** | 2 | SCREW-TRUSS HEAD (M6X1X20MM) | |
| E | 33 | 1 | **6V-6813** | | HOSE (40CM) | |

E-ORDER BY THE CENTIMETER
M-METRIC PART
Y-SEPARATE ILLUSTRATION

## *164-1032* AIR CONDITIONER & MOUNTING GP *(contd.)* i01981929

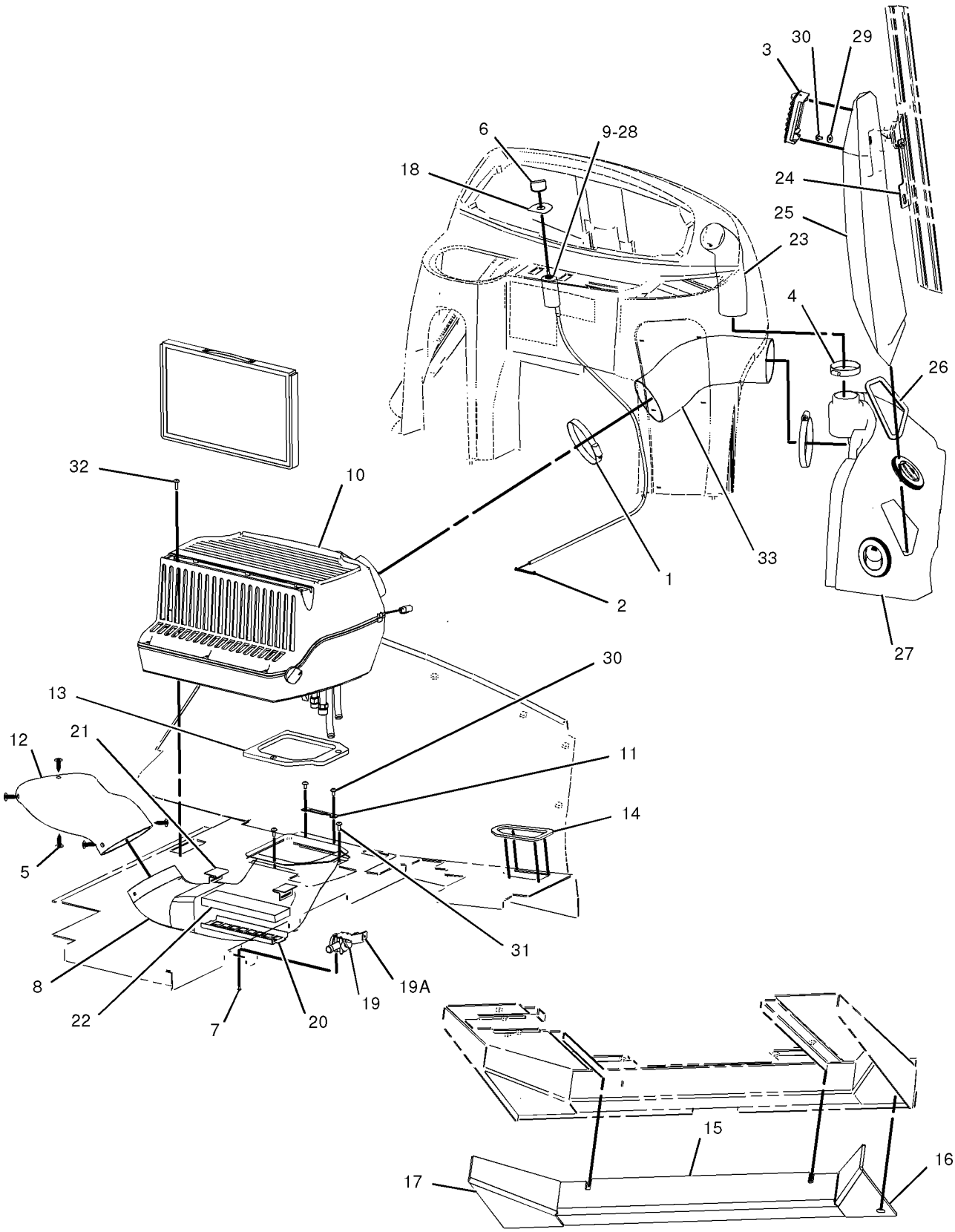


GRAPHIC #1 **<END>** g01028109

# OPERATOR STATION

## 170-0075 AIR CONDITIONER GP

**S/N: BXC1-UP; DSX1-UP**
**PART OF 164-1032 AIR CONDITIONER & MOUNTING GP**
**AN ATTACHMENT**

**SMCS-1807, 7320, 7322** **i01870980**

| NOTE | REF NO | GRAPHIC REF | PART NUMBER | QTY | PART NAME 1 2 3 4 5 6 (PRODUCT LEVEL) | SEE PAGE |
|---|---|---|---|---|---|---|
| | 1 | 1 | **119-9631** | 1 | SWITCH-THERMOSTAT | |
| | 2 | 1 | **164-4139** | 1 | COIL AS | |
| | | 1 | **7X-2049** | 1 | TUBE AS-REFRIGERANT ORIFICE | |
| | | 1 | **201-1635** | 1 | GASKET | |
| | | 1 | **201-1636** | 1 | GASKET | |
| | 3 | 1 | **168-2313** | 1 | FAN AS | |
| | | 1 | **7T-0093** | 2 | PIN-CONNECTOR | |
| | 4 | 1 | **170-7269** | 1 | COVER | |
| | 5 | 1 | **170-7270** | 1 | CASE AS | |
| | | 1 | **6C-3680** | 4 | RIVET-POP | |
| M | | 1 | **129-3178** | 4 | LOCKNUT (M6X1 THD) | |
| | | 1 | **188-2711** | 1 | GUARD AS | |
| | 6 | 1 | **170-7271** | 1 | COVER | |
| | 7 | 1 | **170-7272** | 1 | FILTER-AIR (CAB AIR) | |
| | 8 | 1 | **170-7274** | 1 | HARNESS AS-HEATER & AIR COND | |
| | | 1 | **155-2270** | 1 | KIT-CONNECTING PLUG (2 PIN) | |
| | 9 | 1 | **170-7281** | 1 | GASKET | |
| | 10 | 1 | **170-7282** | 1 | GASKET | |
| | 11 | 1 | **185-4015** | 4 | CLIP | |
| | 12 | 1 | **188-2706** | 2 | GASKET | |
| | 13 | 1 | **188-2708** | 1 | GASKET | |
| | 14 | 1 | **188-2709** | 1 | GASKET | |
| | 15 | 1 | **188-2710** | 1 | GASKET | |
| | 16 | 1 | **188-2712** | 2 | FITTING | |
| | 17 | 1 | **191-6034** | 1 | GROMMET | |
| | 18 | 1 | **199-3729** | 1 | DOOR AS | |
| | | 1 | **191-6033** | 1 | CONTROL AS | |
| | | 1 | **191-6035** | 1 | RETAINER | |
| | | 1 | **201-1634** | 1 | LINK | |
| | 19 | 1 | **204-9921** | 1 | RESISTOR AS | |
| | 20 | 1 | **206-7398** | 1 | KNOB-CONTROL | |
| | 21 | 1 | **213-9270** | 1 | FILM (AIR RECIRCULATION) | |
| | 22 | 1 | **2S-3745** | 6 | SCREW-TAPPING (10-16X.5 IN) | |
| | 23 | 1 | **5P-7921** | 3 | SCREW-WASHER HEAD (1/4-20X3/4 IN) | |
| | 24 | 1 | **6V-6717** | 2 | SCREW-WASHER HEAD (8-32X.375 IN) | |
| M | 25 | 1 | **6V-7357** | 4 | BOLT (M6X1.0X25MM) | |
| | 26 | 1 | **8T-4205** | 4 | WASHER-HARD (7.2X14.5X2MM THK) | |
| D | 27 | 1 | **5P-6011** | | TUBE (0.0381M) | |

D-ORDER BY THE METER
M-METRIC PART

**170-0075 AIR CONDITIONER GP** *(contd. )* **i01870980**

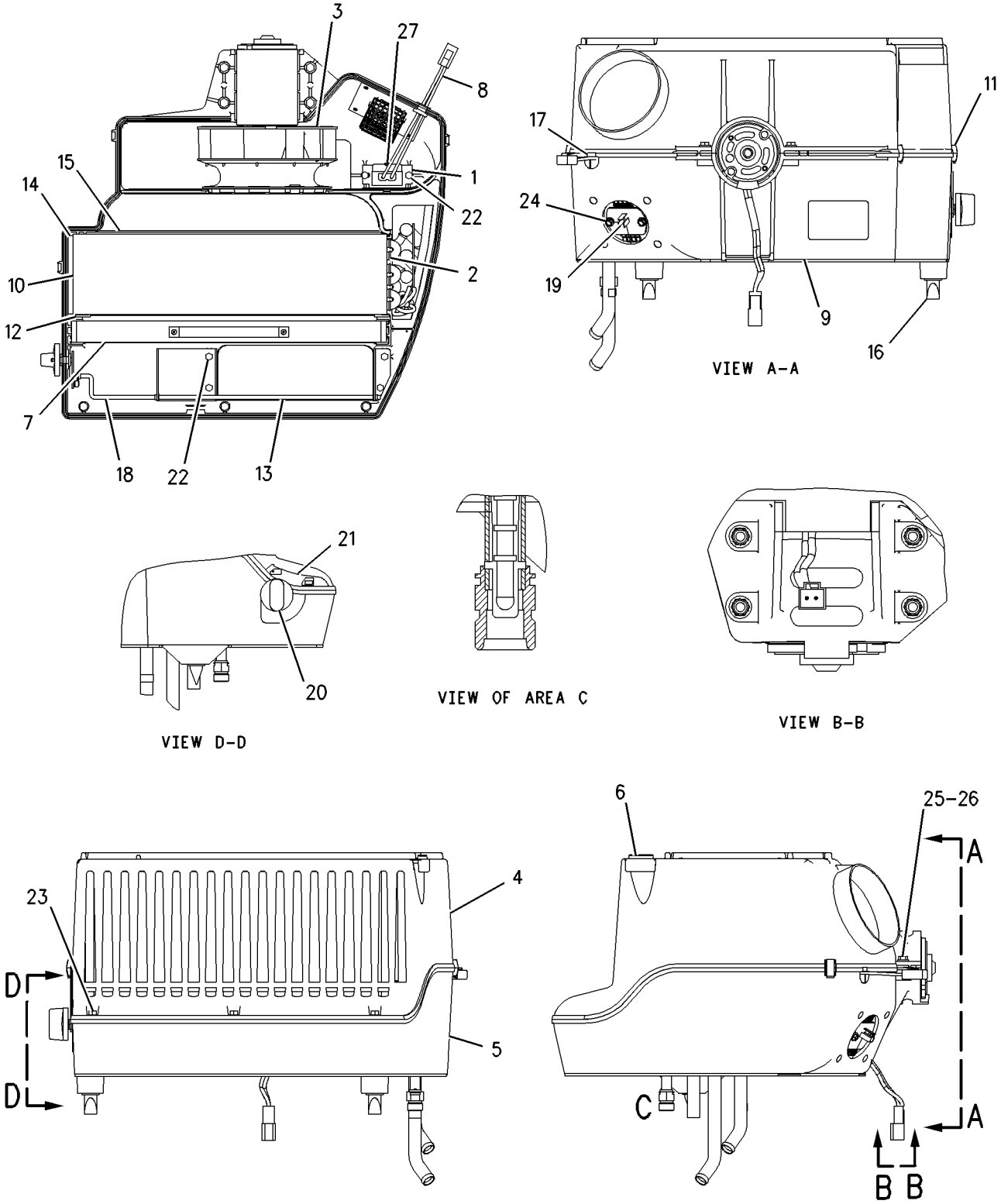


GRAPHIC #1 **<END>** g00952723

# OPERATOR STATION

## 8Y-5904 ARMREST GP

**S/N: BXC1-UP; DSX1-UP**
**PART OF 164-1209, 164-1210, 164-1213 SEAT GP**
**AN ATTACHMENT**

**SMCS-7307, 7312** **i01097001**

| NOTE | REF NO | GRAPHIC REF | PART NUMBER | QTY | PART NAME 1 2 3 4 5 6 (PRODUCT LEVEL) | SEE PAGE |
|---|---|---|---|---|---|---|
| | 1 | 1 | **8Y-5906** | 1 | BASE-ARMREST | |
| L | 2 | 1 | **8S-7803** | 1 | RING-RETAINING | |
| J | 3 | 1 | **6V-2687** | 4 | SCREW-PAN HEAD (10-24X1IN) | |
| L | 4 | 1 | **8T-8641** | 1 | WASHER (M9.8X16.0X0.8MM THK) | |
| L | 5 | 1 | **3E-4312** | 1 | NUT-SQUARE | |
| | | | | | AVAILABLE REPAIR KIT(S): | |
| J | | | **8Y-5988** | 1 | KIT-CUSHION | |
| L | | | **8Y-6028** | 1 | KIT-ADJUSTER | |

J-KIT MARKED J INCLUDES PART MARKED J
L-KIT MARKED L INCLUDES PARTS MARKED L

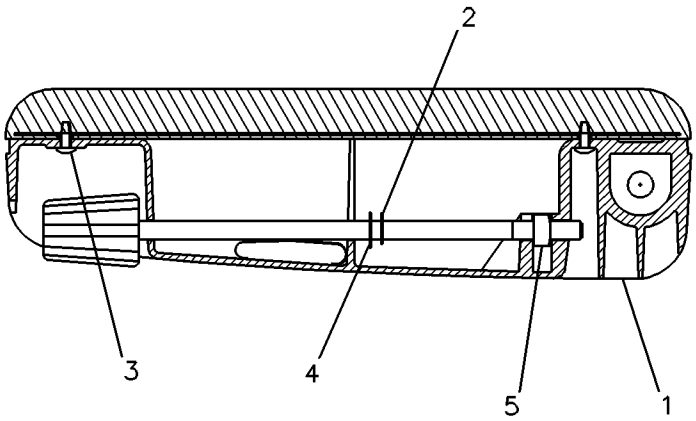


GRAPHIC #1 **<END>** g00083048

# OPERATOR STATION

## *214-7006* CAB AR

**S/N: BXC1-UP; DSX1-UP**
**AN ATTACHMENT**

**SMCS-7301, 7325, 7335** **i01989630**

| NOTE | PART NUMBER | QTY | PART NAME 1 2 3 4 5 6 (PRODUCT LEVEL) | SEE PAGE |
|---|---|---|---|---|
| Y | **226-9095** | 1 | CAB GP | 709 |
| Y | **200-2676** | 1 | COMPARTMENT GP-LITERATURE | 713 |
| Y | *164-1389* | 1 | CONSOLE GP-OPERATOR | 719 |
| Y | *185-3524* | 1 | CONSOLE GP-OPERATOR | 720 |
| Y | *186-0252* | 1 | COVER GP-FIREWALL (LOWER) | 728 |
| Y | *145-6713* | 1 | FAN GP-SUCTION | 56 |
| Y | *164-1149* | 1 | FENDER GP-REAR | 319 |
| | **3E-8211** | | FILM-STRIPE (400CM) | |
| Y | *198-9723* | 1 | FITTING GP-HEATER & AIR COND | 58 |
| Y | *180-5765* | 1 | FLOOR MAT GP | 740 |
| Y | *164-1030* | 1 | HEATER & MTG GP-CAB | 741 |
| Y | *238-9828* | 1 | INDICATOR GP-AIR FILTER CHANGE | 78 |
| Y | *236-6657* | 1 | LINES GP-HEATER | 747 |
| Y | *164-1165* | 1 | SUPPRESSION GP-SOUND | 776 |
| Y | *239-1081* | 1 | TACHOMETER GP-ELECTRIC | 782 |
| Y | *164-1370* | 1 | TRIM GP-CAB | 783 |
| | **5L-3308** | 1 | V-BELT SET (INCLUDES 2 BELTS) | |
| Y | *167-8187* | 1 | WASHER GP-WINDOW | 785 |
| Y | *174-2024* | 1 | WIPER GP-WINDOW | 797 |
| Y | *185-8801* | 1 | WIRING GP-CAB | 178 |
| Y | *238-1166* | 1 | WIRING GP-CONSOLE | 185 |
| Y | *186-2731* | 1 | WIRING GP-HEATER | 193 |

Y-SEPARATE ILLUSTRATION

**<END>**

# OPERATOR STATION

## *214-7007* CAB AR

**S/N: BXC1-UP; DSX1-UP**

**AN ATTACHMENT**

**SMCS-7301, 7325, 7335** **i01989659**

| NOTE | PART NUMBER | QTY | PART NAME 1 2 3 4 5 6 (PRODUCT LEVEL) | SEE PAGE |
|---|---|---|---|---|
| Y | *164-1032* | 1 | AIR CONDITIONER & MOUNTING GP | 698 |
| Y | **226-9095** | 1 | CAB GP | 709 |
| Y | **200-2676** | 1 | COMPARTMENT GP-LITERATURE | 713 |
| Y | *234-8601* | 1 | COMPRESSOR GP-REFRIGERANT | 715 |
| Y | *144-2222* | 1 | CONDENSER & MTG GP-REFRIGERANT | 716 |
| Y | *185-3524* | 1 | CONSOLE GP-OPERATOR | 720 |
| Y | *164-1388* | 1 | CONSOLE GP-SIDE (LH) | 723 |
| Y | *186-0252* | 1 | COVER GP-FIREWALL (LOWER) | 728 |
| Y | *147-1559* | 1 | FAN GP-SUCTION | 57 |
| Y | *164-1149* | 1 | FENDER GP-REAR | 319 |
| | **3E-8211** | | FILM-STRIPE (400CM) | |
| Y | *198-9723* | 1 | FITTING GP-HEATER & AIR COND | 58 |
| Y | *180-5760* | 1 | FLOOR MAT GP | 739 |
| Y | *238-9828* | 1 | INDICATOR GP-AIR FILTER CHANGE | 78 |
| Y | *234-2617* | 1 | LINES GP-HEATER & AIR COND | 749 |
| Y | *164-1165* | 1 | SUPPRESSION GP-SOUND | 776 |
| Y | *239-1080* | 1 | TACHOMETER GP-ELECTRIC | 781 |
| Y | *164-1370* | 1 | TRIM GP-CAB | 783 |
| | **3N-1491** | 1 | V-BELT SET (INCLUDES 2 BELTS) | |
| Y | *167-8187* | 1 | WASHER GP-WINDOW | 785 |
| Y | *174-2024* | 1 | WIPER GP-WINDOW | 797 |
| Y | **238-1811** | 1 | WIRING GP-AIR CONDITIONER | 173 |
| Y | *185-8801* | 1 | WIRING GP-CAB | 178 |
| Y | *238-1166* | 1 | WIRING GP-CONSOLE | 185 |

Y-SEPARATE ILLUSTRATION

**<END>**

# OPERATOR STATION

## *214-7008* CAB AR-ENCLOSED ROPS

**S/N: BXC1-UP; DSX1-UP**

**AN ATTACHMENT**

**SMCS-7301, 7325** **i01989662**

| NOTE | PART NUMBER | QTY | PART NAME 1 2 3 4 5 6 (PRODUCT LEVEL) | SEE PAGE |
|---|---|---|---|---|
| Y | **164-1100** | 1 | CAB GP | 707 |
| Y | **200-2676** | 1 | COMPARTMENT GP-LITERATURE | 713 |
| Y | *185-3524* | 1 | CONSOLE GP-OPERATOR | 720 |
| Y | *164-1388* | 1 | CONSOLE GP-SIDE (LH) | 723 |
| Y | *183-4897* | 1 | CONTROL GP-STEERING | 297 |
| Y | *186-0252* | 1 | COVER GP-FIREWALL (LOWER) | 728 |
| Y | *145-6713* | 1 | FAN GP-SUCTION | 56 |
| Y | *164-1149* | 1 | FENDER GP-REAR | 319 |
| | **110-0037** | 1 | FILM (CATERPILLAR) | |
| | **3E-8211** | | FILM-STRIPE (400CM) | |
| Y | *198-9723* | 1 | FITTING GP-HEATER & AIR COND | 58 |
| Y | *180-5760* | 1 | FLOOR MAT GP | 739 |
| Y | *164-1030* | 1 | HEATER & MTG GP-CAB | 741 |
| Y | *239-6996* | 1 | INDICATOR GP-AIR FILTER CHANGE | 79 |
| Y | *185-8815* | 1 | LIGHTING GP-FLOOD | 133 |
| Y | *236-6657* | 1 | LINES GP-HEATER | 747 |
| Y | *202-5724* | 1 | MOUNTING GP-INSTRUMENT PANEL | 758 |
| Y | *180-5772* | 1 | SEAT GP-SUSPENSION | 775 |
| Y | *164-1165* | 1 | SUPPRESSION GP-SOUND | 776 |
| Y | *239-1081* | 1 | TACHOMETER GP-ELECTRIC | 782 |
| Y | *164-1370* | 1 | TRIM GP-CAB | 783 |
| | **5L-3308** | 1 | V-BELT SET (INCLUDES 2 BELTS) | |
| Y | *108-8251* | 1 | VISOR GP-CAB | 784 |
| Y | *167-8187* | 1 | WASHER GP-WINDOW | 785 |
| Y | *174-2024* | 1 | WIPER GP-WINDOW | 797 |
| Y | *185-8801* | 1 | WIRING GP-CAB | 178 |
| Y | *238-1167* | 1 | WIRING GP-CONSOLE | 187 |
| Y | *186-2731* | 1 | WIRING GP-HEATER | 193 |
| Y | *190-7557* | 1 | WIRING GP-POWER RECEPTACLE | 202 |

Y-SEPARATE ILLUSTRATION

**<END>**

# OPERATOR STATION

## *214-7009* CAB AR-ENCLOSED ROPS

**S/N: BXC1-UP; DSX1-UP**

**AN ATTACHMENT**

**SMCS-7301, 7325** **i01989663**

| NOTE | PART NUMBER | QTY | PART NAME 1 2 3 4 5 6 (PRODUCT LEVEL) | SEE PAGE |
|---|---|---|---|---|
| Y | *164-1032* | 1 | AIR CONDITIONER & MOUNTING GP | 698 |
| Y | **164-1100** | 1 | CAB GP | 707 |
| Y | **200-2676** | 1 | COMPARTMENT GP-LITERATURE | 713 |
| Y | *234-8601* | 1 | COMPRESSOR GP-REFRIGERANT | 715 |
| Y | *144-2222* | 1 | CONDENSER & MTG GP-REFRIGERANT | 716 |
| Y | *185-3524* | 1 | CONSOLE GP-OPERATOR | 720 |
| Y | *164-1388* | 1 | CONSOLE GP-SIDE (LH) | 723 |
| Y | *183-4897* | 1 | CONTROL GP-STEERING | 297 |
| Y | *186-0252* | 1 | COVER GP-FIREWALL (LOWER) | 728 |
| Y | *147-1559* | 1 | FAN GP-SUCTION | 57 |
| Y | *164-1149* | 1 | FENDER GP-REAR | 319 |
| | **110-0037** | 1 | FILM (CATERPILLAR) | |
| | **3E-8211** | | FILM-STRIPE (400CM) | |
| Y | *198-9723* | 1 | FITTING GP-HEATER & AIR COND | 58 |
| Y | *180-5760* | 1 | FLOOR MAT GP | 739 |
| Y | *239-6996* | 1 | INDICATOR GP-AIR FILTER CHANGE | 79 |
| Y | *185-8815* | 1 | LIGHTING GP-FLOOD | 133 |
| Y | *234-2617* | 1 | LINES GP-HEATER & AIR COND | 749 |
| Y | *202-5724* | 1 | MOUNTING GP-INSTRUMENT PANEL | 758 |
| Y | *180-5772* | 1 | SEAT GP-SUSPENSION | 775 |
| Y | *164-1165* | 1 | SUPPRESSION GP-SOUND | 776 |
| Y | *239-1080* | 1 | TACHOMETER GP-ELECTRIC | 781 |
| Y | *164-1370* | 1 | TRIM GP-CAB | 783 |
| | **3N-1491** | 1 | V-BELT SET (INCLUDES 2 BELTS) | |
| Y | *108-8251* | 1 | VISOR GP-CAB | 784 |
| Y | *167-8187* | 1 | WASHER GP-WINDOW | 785 |
| Y | *174-2024* | 1 | WIPER GP-WINDOW | 797 |
| Y | *238-1811* | 1 | WIRING GP-AIR CONDITIONER | 173 |
| Y | *185-8801* | 1 | WIRING GP-CAB | 178 |
| Y | *238-1167* | 1 | WIRING GP-CONSOLE | 187 |
| Y | *190-7557* | 1 | WIRING GP-POWER RECEPTACLE | 202 |

Y-SEPARATE ILLUSTRATION

**<END>**

# OPERATOR STATION

## 164-1100 CAB GP

**S/N: BXC1-UP; DSX1-UP**
**SIDESHIFT**
**PART OF 214-7008, 214-7009 CAB AR-ENCLOSED ROPS**
**AN ATTACHMENT**

**SMCS-7301, 7325, 7335** **i02003931**

| NOTE | REF NO | GRAPHIC REF | PART NUMBER | QTY | PART NAME 1 2 3 4 5 6 (PRODUCT LEVEL) | SEE PAGE |
|---|---|---|---|---|---|---|
| | 1 | 1 | **134-3059** | 1 | GUARD-STRIKER | |
| | 2 | 1 | **134-3060** | 1 | PLATE | |
| | 3 | 1 | **134-3061** | 1 | PLATE | |
| | 4 | 1 | **134-3062** | 2 | STRIKER | |
| | 5 | 1 | **134-3503** | 1 | GUARD-STRIKER | |
| | 6 | 1 | **163-7939** | 1 | PLATE AS | |
| Y | 7 | 1 | **164-1059** | 1 | WINDOW GP-CAB (RH) | 787 |
| Y | 8 | 1 | **164-1060** | 1 | WINDOW GP-CAB (LH) | 789 |
| Y | 9 | 1 | **164-1061** | 1 | DOOR GP-RH | 733 |
| Y | 10 | 1 | **164-1062** | 1 | DOOR GP-LH | 731 |
| | 11 | 1 | **164-1068** | 1 | GLASS-RH | |
| | 12 | 1 | **164-1069** | 1 | GLASS-LH | |
| | 13 | 1 | **164-1070** | 1 | GLASS (FRONT) | |
| | 14 | 1 | **164-1071** | 1 | GLASS (RH) | |
| | 15 | 1 | **164-1072** | 1 | GLASS (LH) | |
| Y | 16 | 1 | **164-1300** | 1 | WINDOW GP-CAB (LOWER REAR) | 791 |
| | 17 | 1 | **167-3710** | 1 | HARNESS AS-CAB (LIGHTS) | |
| | | 1 | **155-2265** | 1 | KIT-CONNECTING PLUG (8-PIN) | |
| | | | | | (KIT SERVICES PLUG AS AND WEDGE) | |
| B | 18 | 1 | **177-4877** | 2 | SHIM (1.00MM THK) | |
| | 19 | 1 | **218-2153** | 1 | CAB AS | |
| | 20 | 1 | **108-4311** | 2 | SCREW-MACHINE | |
| | 21 | 1 | **117-7414** | 2 | PIN | |
| | 22 | 1 | **129-5256** | 12 | BUSHING | |
| | 23 | 1 | **129-5257** | 8 | BUSHING | |
| M | 24 | 1 | **131-3987** | 8 | SCREW (M4X0.7X12MM) | |
| | 25 | 1 | **159-4945** | 2 | KEEPER-REAR (LH) | |
| | 26 | 1 | **159-4946** | 2 | KEEPER-REAR (RH) | |
| M | 27 | 1 | **5C-7261** | 2 | NUT (M8X1.25 THD) | |
| | 28 | 1 | **5P-4116** | 11 | WASHER-HARD (8.8X20.5X2MM THK) | |
| | 29 | 1 | **8S-7803** | 8 | RING-RETAINING | |
| M | 30 | 1 | **8T-4189** | 5 | BOLT (M8X1.25X20MM) | |
| M | 31 | 1 | **8T-4200** | 4 | BOLT (M8X1.25X16MM) | |
| | 32 | 1 | **8Y-7444** | 2 | PIN | |
| | 33 | 1 | **9R-5616** | 2 | PLUG | |
| E | 34 | 1 | **144-0195** | 2 | HOSE (410CM) | |
| | 35 | 1 | **3S-2093** | 7 | STRAP-CABLE | |

B-USE AS REQUIRED
E-ORDER BY THE CENTIMETER
M-METRIC PART
Y-SEPARATE ILLUSTRATION

**164-1100 CAB GP** *(contd. )* **i02003931**

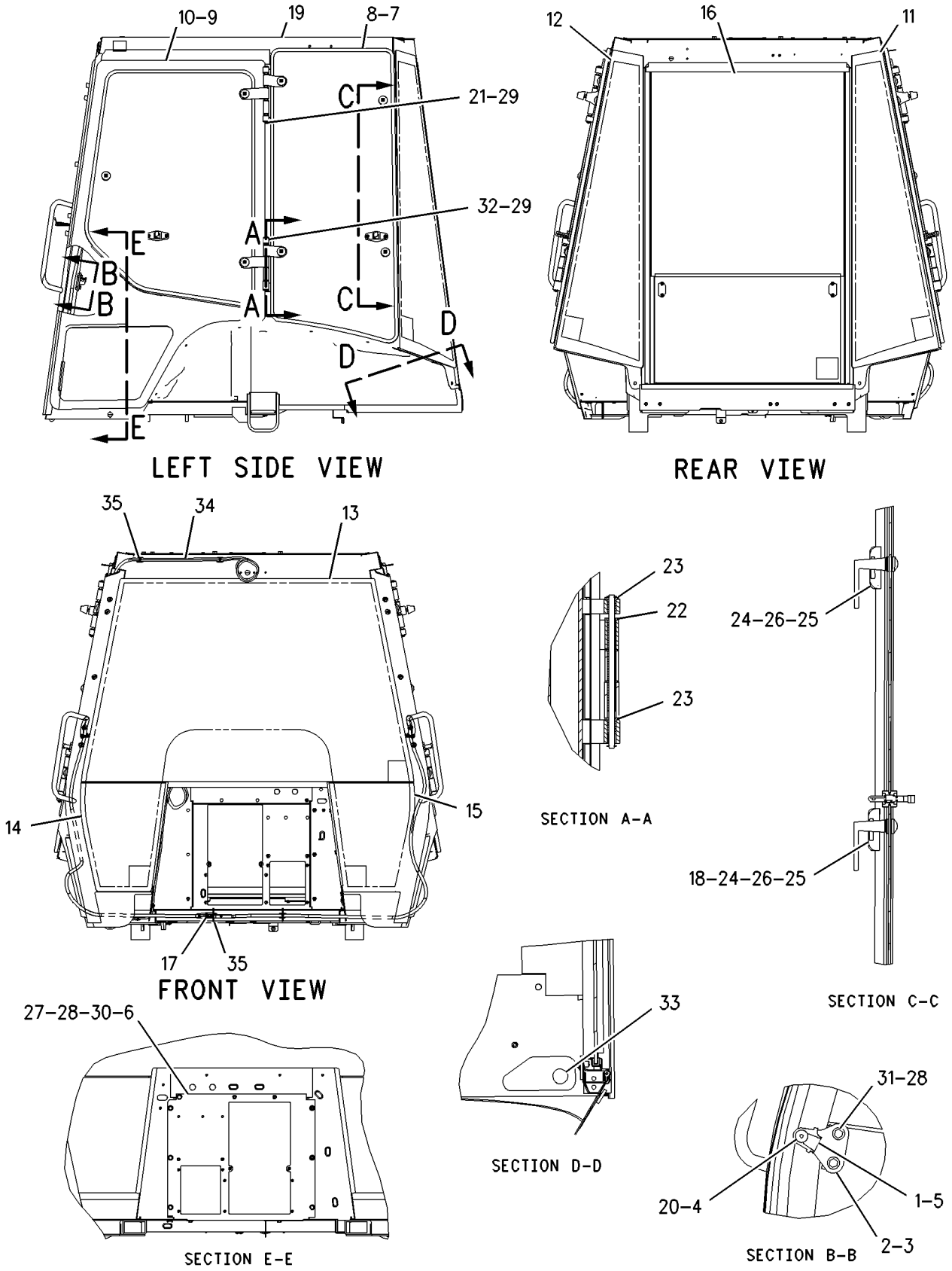


GRAPHIC #1 **<END>** g00880262

# OPERATOR STATION

## 226-9095 CAB GP

**S/N: BXC1-UP; DSX1-UP**
**SIDESHIFT, STANDARD**
**PART OF 214-7006, 214-7007 CAB AR**
**AN ATTACHMENT**

**SMCS-7301, 7325, 7335** **i01792617**

| NOTE | REF NO | GRAPHIC REF | PART NUMBER | QTY | PART NAME 1 2 3 4 5 6 (PRODUCT LEVEL) | SEE PAGE |
|---|---|---|---|---|---|---|
| | 1 | 1 | **4W-4065** | 4 | SPACER (50.8MM THK) | |
| | 2 | 1 | **8Y-7309** | 2 | RETAINER | |
| | 3 | 1 | **134-3059** | 1 | GUARD-STRIKER | |
| | 4 | 1 | **134-3060** | 1 | PLATE | |
| | 5 | 1 | **134-3061** | 1 | PLATE | |
| | 6 | 1 | **134-3062** | 2 | STRIKER | |
| | 7 | 1 | **134-3503** | 1 | GUARD-STRIKER | |
| | 8 | 1 | **143-2830** | 2 | LATCH AS | |
| | | | | | (EACH INCLUDES) | |
| M | | 1 | **6V-7743** | 2 | LOCKNUT (M6X1 THD) | |
| M | | 1 | **9X-2045** | 2 | SCREW-TRUSS HEAD (M6X1X20MM) | |
| | | 1 | **143-2827** | 1 | SPRING | |
| | 9 | 1 | **163-7939** | 1 | PLATE AS | |
| Y | 10 | 1 | **164-1061** | 1 | DOOR GP-RH | 733 |
| Y | 11 | 1 | **164-1062** | 1 | DOOR GP-LH | 731 |
| | 12 | 1 | **164-1068** | 1 | GLASS-RH | |
| | 13 | 1 | **164-1069** | 1 | GLASS-LH | |
| | 14 | 1 | **164-1070** | 1 | GLASS (FRONT) | |
| | 15 | 1 | **164-1071** | 1 | GLASS-RH | |
| | 16 | 1 | **164-1072** | 1 | GLASS-LH | |
| Y | 17 | 1 | *164-1300* | 1 | WINDOW GP-CAB (LOWER REAR) | 791 |
| | 18 | 1 | **167-3710** | 1 | HARNESS AS (ROAD) | |
| | | 1 | **155-2265** | 1 | KIT-CONNECTING PLUG (8 PIN) | |
| | 19 | 1 | **218-2154** | 1 | CAB AS | |
| | 20 | 1 | **226-7811** | 1 | GLASS (LH) | |
| | 21 | 1 | **226-7812** | 1 | GLASS (RH) | |
| | 22 | 1 | **108-4311** | 2 | SCREW-MACHINE | |
| | 23 | 1 | **117-7414** | 2 | PIN | |
| | 24 | 1 | **129-5256** | 8 | BUSHING | |
| | 25 | 1 | **129-5257** | 8 | BUSHING | |
| M | 26 | 1 | **5C-7261** | 4 | NUT (M8X1.25 THD) | |
| | 27 | 1 | **5P-4116** | 11 | WASHER-HARD (8.8X20.5X2MM THK) | |
| | 28 | 1 | **7X-2393** | 2 | BUMPER-CONICAL | |
| | 29 | 1 | **8S-7803** | 8 | RING-RETAINING | |
| M | 30 | 1 | **8T-4189** | 5 | BOLT (M8X1.25X20MM) | |
| M | 31 | 1 | **8T-4200** | 4 | BOLT (M8X1.25X16MM) | |
| | 32 | 1 | **8Y-7444** | 2 | PIN | |
| | 33 | 1 | **9R-5616** | 2 | PLUG | |
| | 34 | 1 | **144-0195** | | HOSE (820CM) | |
| | 35 | 1 | **3S-2093** | 7 | STRAP-CABLE | |

M-METRIC PART
Y-SEPARATE ILLUSTRATION

**226-9095 CAB GP** *(contd. )* **i01792617**

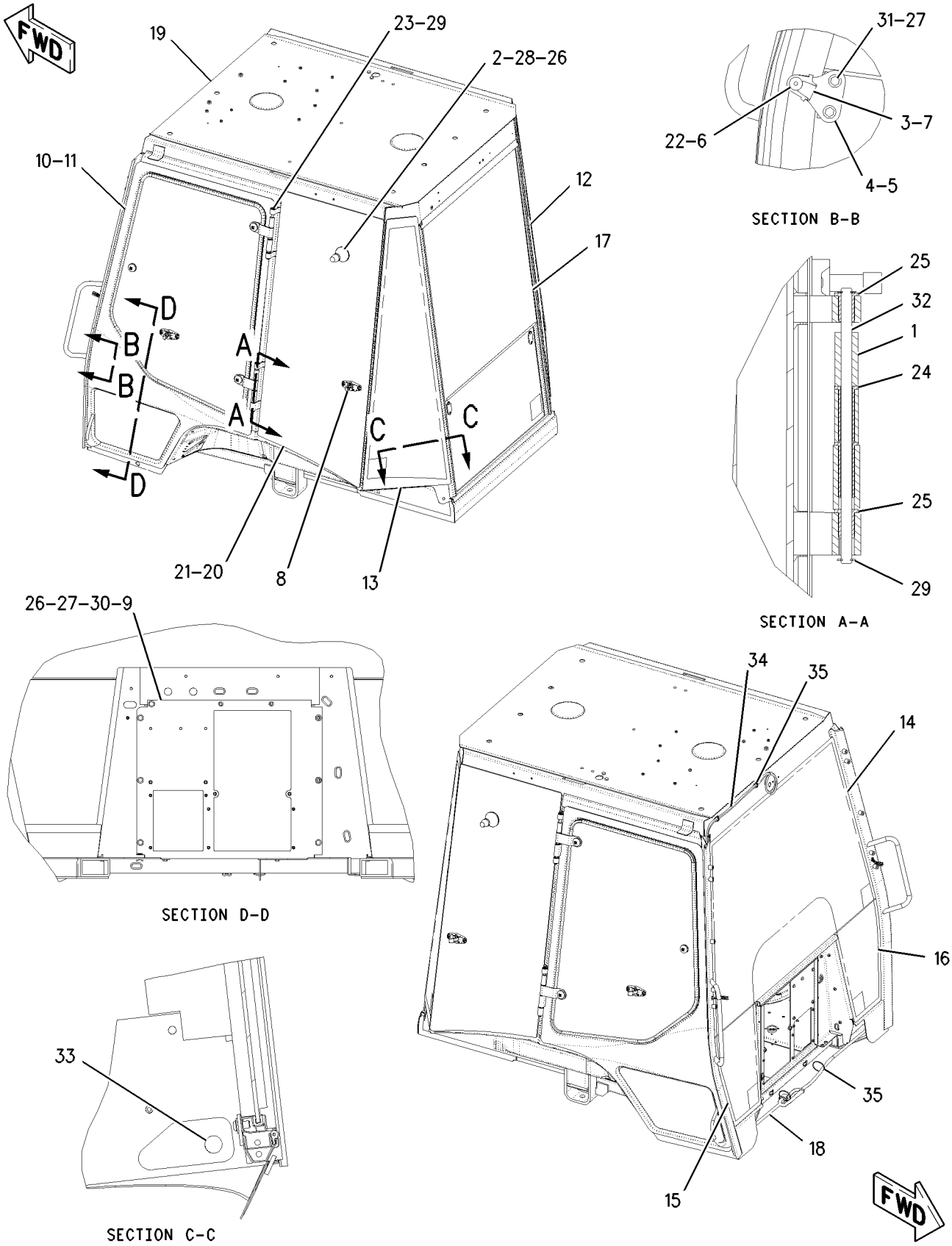


GRAPHIC #1 **<END>** g00946779

# OPERATOR STATION

## *214-7004* CANOPY AR

**S/N: BXC1-UP; DSX1-UP**

**AN ATTACHMENT**

**SMCS-7302** **i01969764**

| NOTE | PART NUMBER | QTY | PART NAME 1 2 3 4 5 6 (PRODUCT LEVEL) | SEE PAGE |
|---|---|---|---|---|
| Y | *164-1175* | 1 | CANOPY GP-OPEN ROPS | 712 |
| Y | *164-1389* | 1 | CONSOLE GP-OPERATOR | 719 |
| Y | *185-3530* | 1 | CONSOLE GP-SIDE | 726 |
| Y | *186-0252* | 1 | COVER GP-FIREWALL (LOWER) | 728 |
| Y | *198-0104* | 1 | COVER GP-FIREWALL (UPPER) | 729 |
| Y | **197-7564** | 1 | COVER GP-POST (RH) | 730 |
| Y | *145-6713* | 1 | FAN GP-SUCTION | 56 |
| Y | *164-1149* | 1 | FENDER GP-REAR | 319 |
| Y | *180-5765* | 1 | FLOOR MAT GP | 740 |
| Y | *238-9828* | 1 | INDICATOR GP-AIR FILTER CHANGE | 78 |
| | *203-4158* | 1 | PLUG GP | |
| | **9J-1874** | 1 | PLUG | |
| | **187-1644** | 2 | PLUG | |
| Y | *239-1081* | 1 | TACHOMETER GP-ELECTRIC | 782 |
| Y | *164-1370* | 1 | TRIM GP-CAB | 783 |
| | **5L-3308** | 1 | V-BELT SET (INCLUDES 2 BELTS) | |
| Y | *185-8802* | 1 | WIRING GP-CAB | 180 |
| Y | *238-1166* | 1 | WIRING GP-CONSOLE | 185 |

Y-SEPARATE ILLUSTRATION

**<END>**

# OPERATOR STATION

## *164-1175* CANOPY GP-OPEN ROPS

**S/N: BXC1-UP; DSX1-UP**
**MECHANICAL BACKHOE CONTROLS**
**PART OF 214-7004 CANOPY AR**
**AN ATTACHMENT**

**SMCS-7302, 7323** **i02005623**

| NOTE | REF NO | GRAPHIC REF | PART NUMBER | QTY | PART NAME 1 2 3 4 5 6 (PRODUCT LEVEL) | SEE PAGE |
|---|---|---|---|---|---|---|
| | 1 | 1 | **163-7939** | 1 | PLATE AS | |
| | 2 | 1 | **164-1071** | 1 | GLASS (RH) | |
| | 3 | 1 | **164-1072** | 1 | GLASS (LH) | |
| | 4 | 1 | **167-3710** | 1 | HARNESS AS-CAB (LIGHTS) | |
| | | 1 | **155-2265** | 1 | KIT-CONNECTING PLUG (8-PIN) | |
| | | | | | (KIT SERVICES PLUG AS AND WEDGE) | |
| | 5 | 1 | **218-2152** | 1 | CANOPY AS | |
| | 6 | 1 | **3S-2093** | 2 | STRAP-CABLE | |
| M | 7 | 1 | **5C-7261** | 2 | NUT (M8X1.25 THD) | |
| | 8 | 1 | **5P-4116** | 7 | WASHER-HARD (8.8X20.5X2MM THK) | |
| M | 9 | 1 | **8T-4189** | 5 | BOLT (M8X1.25X20MM) | |
| E | 10 | 1 | **9X-2092** | 2 | STRIP-EDGE (40CM) | |

E-ORDER BY THE CENTIMETER
M-METRIC PART

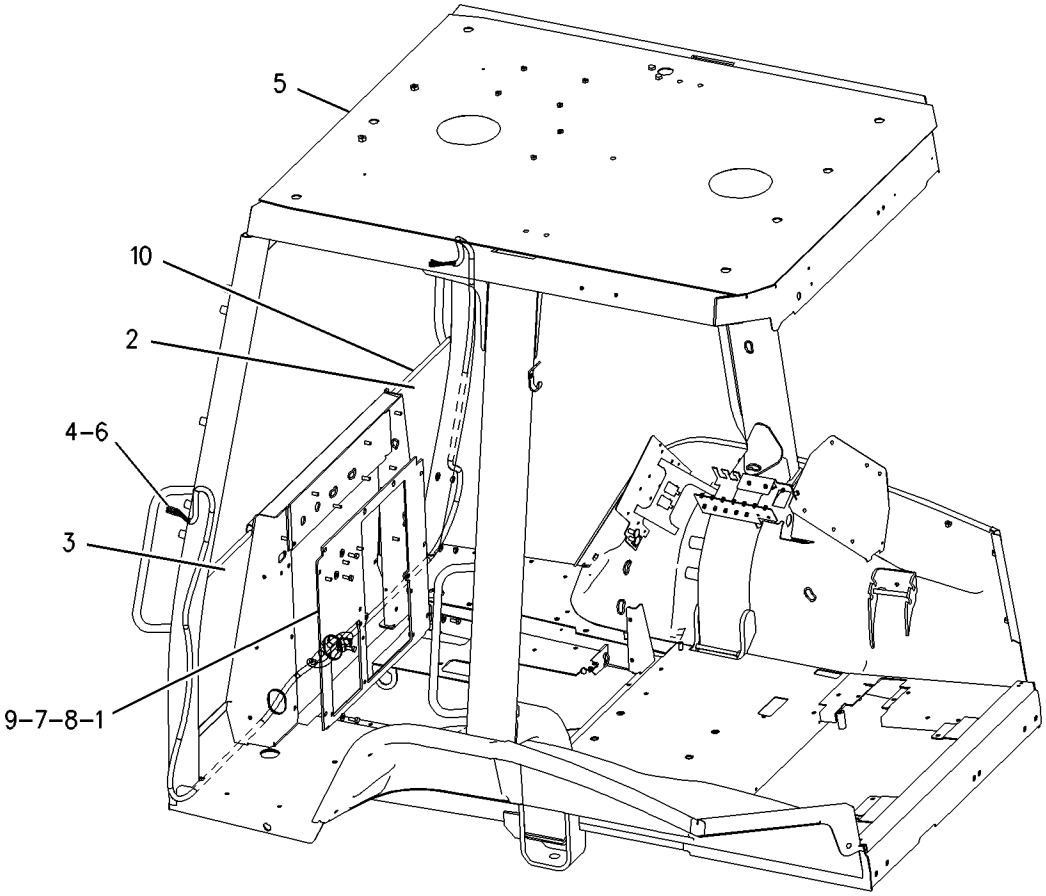


GRAPHIC #1 **<END>** g00880133

# OPERATOR STATION

## *200-2676* COMPARTMENT GP-LITERATURE

**S/N: BXC1-UP; DSX1-UP**

**PART OF 214-7006, 214-7007 CAB AR, 214-7008, 214-7009 CAB AR-ENCLOSED ROPS AN ATTACHMENT**

**SMCS-7268** **i01986839**

| NOTE | REF NO | GRAPHIC REF | PART NUMBER | QTY | PART NAME 1 2 3 4 5 6 (PRODUCT LEVEL) | SEE PAGE |
|---|---|---|---|---|---|---|
| | 1 | 1 | **5P-7957** | 1 | LANYARD | |
| | 2 | 1 | **5P-7958** | 1 | SLEEVE-CABLE SPLICE | |
| | 3 | 1 | **5P-8500** | 2 | KEY | |
| B | 4 | 1 | **7F-3400** | 2 | BAG-POLYETHYLENE | |

B-USE AS REQUIRED

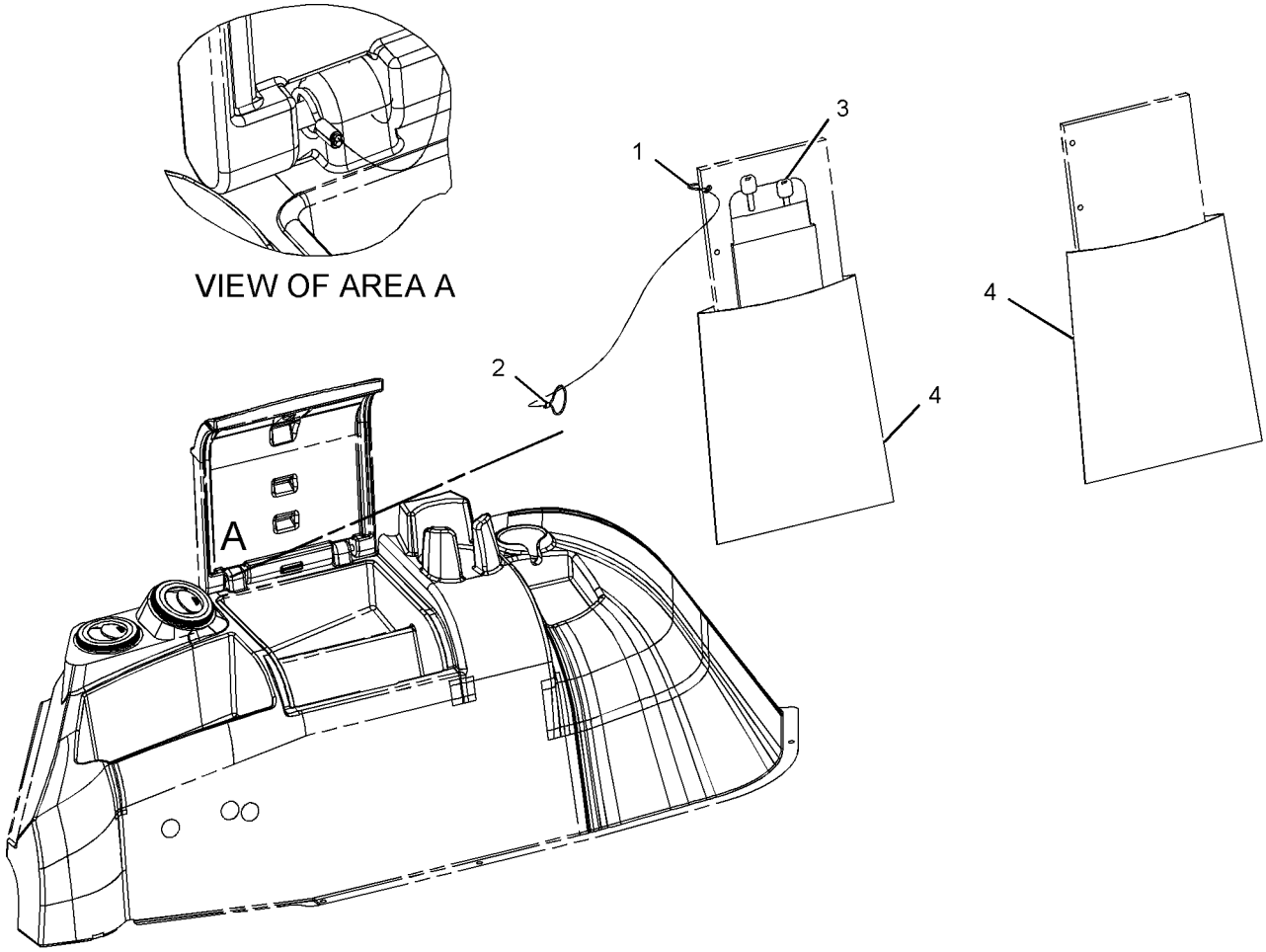


GRAPHIC #1 **<END>** g01035330

# OPERATOR STATION

## 3E-1908 COMPRESSOR GP-REFRIGERANT

**S/N: BXC1-UP; DSX1-UP**
**PART OF 234-8601 COMPRESSOR GP-REFRIGERANT**
**AN ATTACHMENT**

**SMCS-1802** **i01234316**

| NOTE | REF NO | GRAPHIC REF | PART NUMBER | QTY | PART NAME 1 2 3 4 5 6 (PRODUCT LEVEL) | SEE PAGE |
|---|---|---|---|---|---|---|
| | 1 | 1 | *3E-3658* | 1 | COMPRESSOR AS | |
| | 2 | 1 | **7T-4532** | 1 | PLUG AS | |
| | 3 | 1 | **9X-7385** | 2 | SEAL-O-RING (20.22MM ID) | |

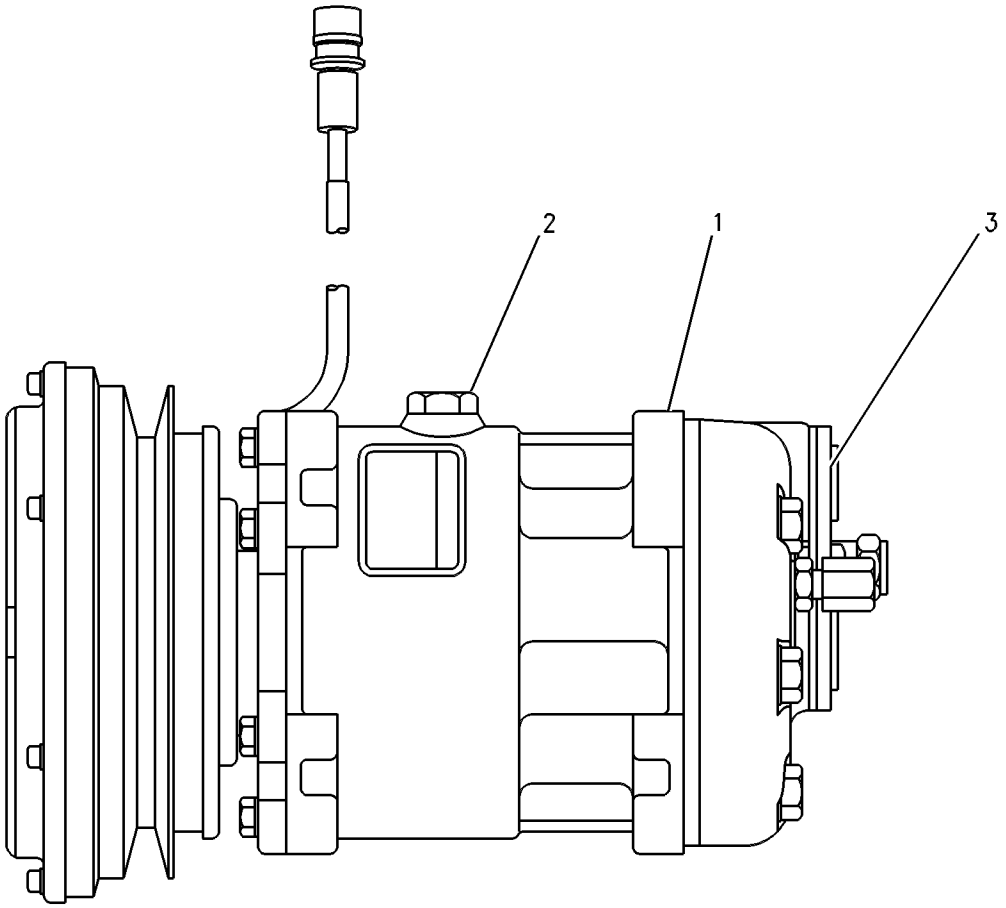


GRAPHIC #1 **<END>** g00660126

# OPERATOR STATION

## *234-8601* COMPRESSOR GP-REFRIGERANT

**S/N: BXC1-UP; DSX1-UP**
**PART OF 214-7007 CAB AR, 214-7009 CAB AR-ENCLOSED ROPS**
**AN ATTACHMENT**

**SMCS-1802** **i02008912**

| NOTE | REF NO | GRAPHIC REF | PART NUMBER | QTY | PART NAME 1 2 3 4 5 6 (PRODUCT LEVEL) | SEE PAGE |
|---|---|---|---|---|---|---|
| | 1 | 1 | **1W-2934** | 1 | V-BELT (AIR CONDITIONING COMPRESSOR) | |
| Y | 2 | 1 | **3E-1908** | 1 | COMPRESSOR GP-REFRIGERANT | 714 |
| | 3 | 1 | **124-6524** | 1 | SPACER (11X25X10.5MM THK) | |
| | 4 | 1 | **130-3881** | 1 | PULLEY-FAN | |
| | 5 | 1 | **234-9430** | 1 | PLATE AS | |
| | 6 | 1 | **234-9554** | 1 | PLATE | |
| | 7 | 1 | **235-1056** | 1 | PLATE | |
| | 8 | 1 | **239-0602** | 1 | PLATE | |
| | 9 | 1 | **244-2104** | 1 | PLATE | |
| | 10 | 1 | **8T-4121** | 12 | WASHER-HARD (11X21X2.5MM THK) | |
| M | 11 | 1 | **8T-4133** | 5 | NUT (M10X1.5 THD) | |
| M | 12 | 1 | **8T-4185** | 1 | BOLT (M10X1.5X50MM) | |
| M | 13 | 1 | **8T-4186** | 5 | BOLT (M10X1.5X40MM) | |
| M | 14 | 1 | **8T-4195** | 1 | BOLT (M10X1.5X30MM) | |
| | 15 | 1 | **8T-4223** | 2 | WASHER-HARD (13.5X25.5X3MM THK) | |
| | 16 | 1 | **8T-4224** | 4 | WASHER-HARD (8.8X16X2MM THK) | |
| M | 17 | 1 | **8T-4244** | 1 | NUT (M12X1.75 THD) | |
| M | 18 | 1 | **8T-4908** | 4 | BOLT (M8X1.25X25MM) | |
| M | 19 | 1 | **8T-5001** | 1 | BOLT (M12X1.75X130MM) | |

M-METRIC PART
Y-SEPARATE ILLUSTRATION

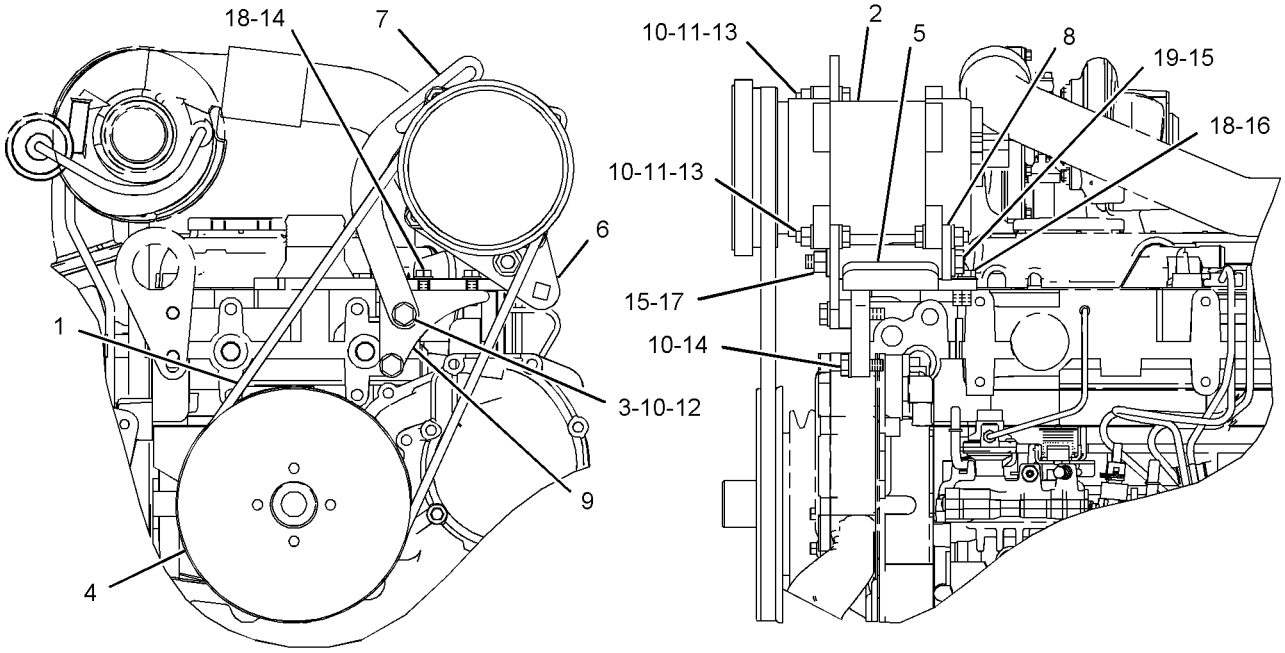


FRONT VIEW LEFT SIDE VIEW

GRAPHIC #1 **<END>** g01038724

# OPERATOR STATION

## *144-2222* CONDENSER & MTG GP-REFRIGERANT

**S/N: BXC1-UP; DSX1-UP**
**PART OF 214-7007 CAB AR, 214-7009 CAB AR-ENCLOSED ROPS**
**AN ATTACHMENT**

**SMCS-1805** **i01988316**

| NOTE | REF NO | GRAPHIC REF | PART NUMBER | QTY | PART NAME 1 2 3 4 5 6 (PRODUCT LEVEL) | SEE PAGE |
|---|---|---|---|---|---|---|
| | 1 | 1 | **7X-0579** | 7 | WASHER-HARD (8.8X25.5X2MM THK) | |
| | 2 | 1 | **166-2861** | 1 | CORE AS | |
| C | 3 | 1 | **240-2614** | 2 | SPACER (10X19.5X60MM THK) | |
| M | 4 | 1 | **153-3061** | 1 | BOLT (M8X1.25X130MM) | |
| M | 5 | 1 | **8T-3647** | 1 | BOLT (M8X1.25X80MM) | |
| M | 6 | 1 | **8T-4200** | 4 | BOLT (M8X1.25X16MM) | |

C-CHANGE FROM PREVIOUS TYPE
M-METRIC PART

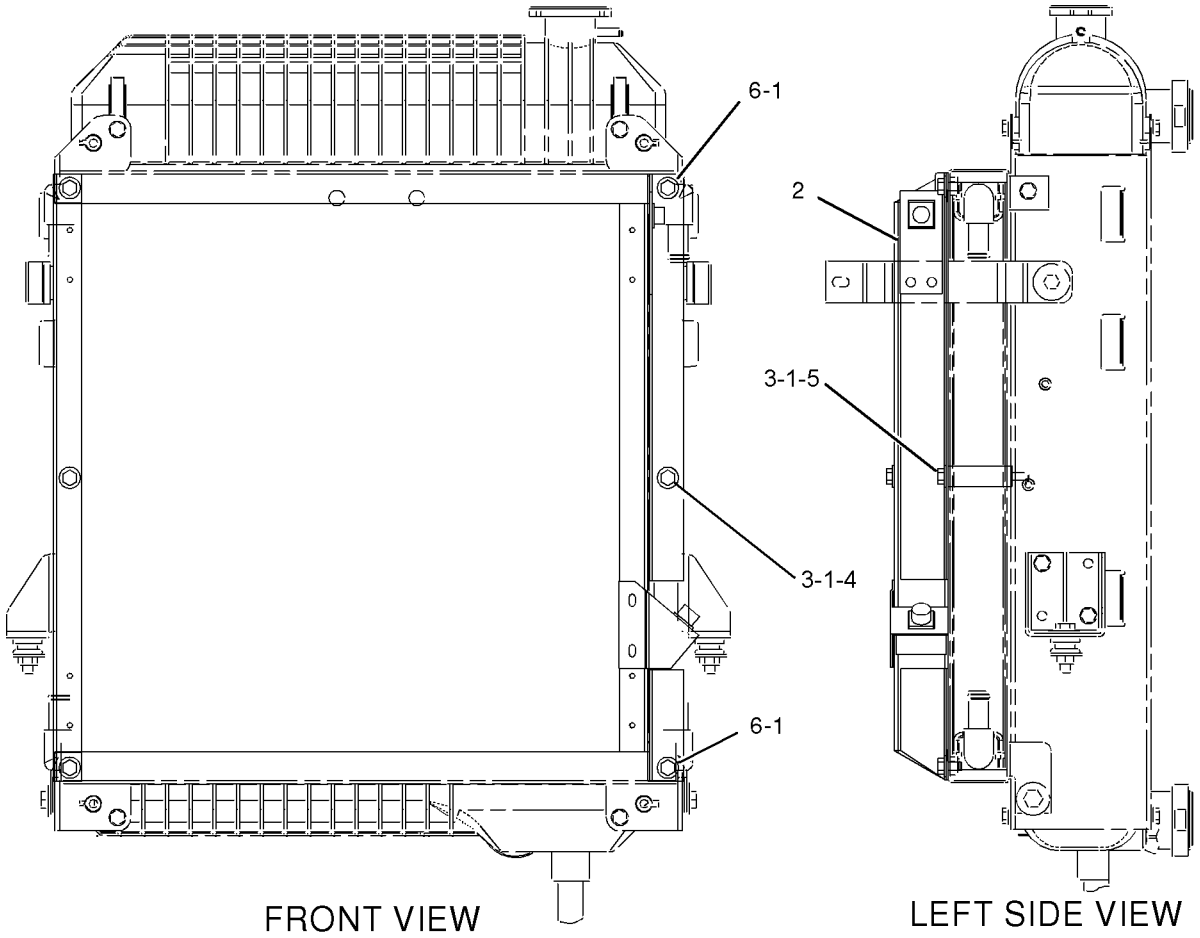


GRAPHIC #1 **<END>** g01029783

# OPERATOR STATION

## *237-9541* CONSOLE GP-FRONT

**S/N: BXC1-UP; DSX1-UP**
**PART OF 214-7014 POWER TRAIN AR**
**AN ATTACHMENT**

**SMCS-5258** **i01994471**

| NOTE | REF NO | GRAPHIC REF | PART NUMBER | QTY | PART NAME 1 2 3 4 5 6 (PRODUCT LEVEL) | SEE PAGE |
|---|---|---|---|---|---|---|
| | 1 | 1 | **8Y-6388** | 1 | LOUVER AS | |
| | 2 | 1 | **164-8473** | 5 | LOUVER AS | |
| | 3 | 1 | **237-7161** | 1 | CONSOLE-FRONT | |
| | 4 | 1 | **104-2091** | 22 | SCREW-FLAT HEAD (6-20X0.5 IN) | |

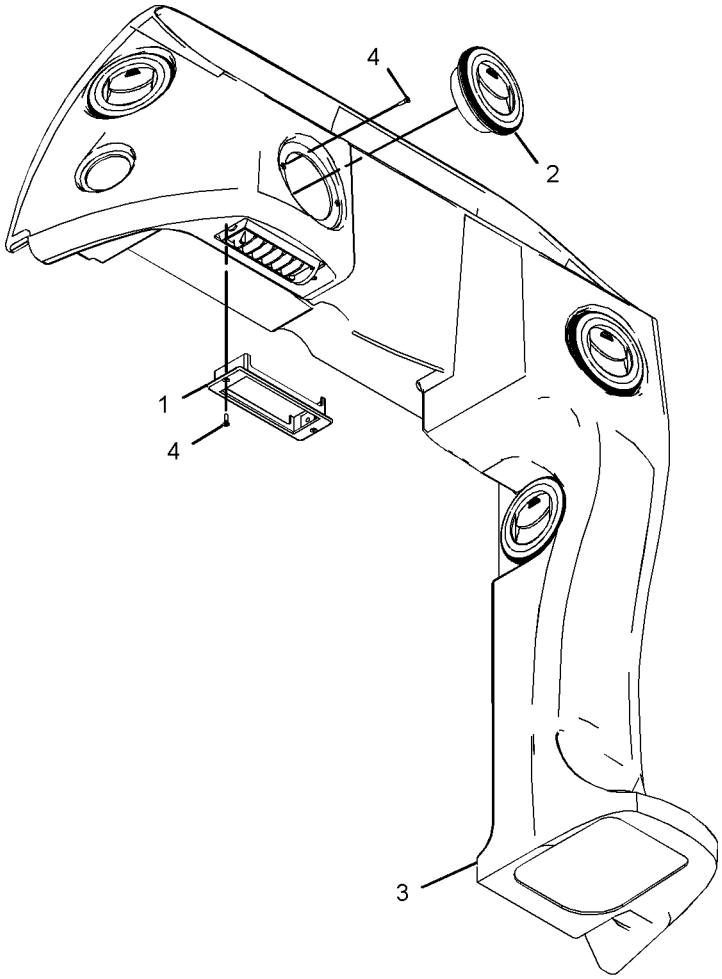


GRAPHIC #1 **<END>** g01033313

# OPERATOR STATION

## *237-9542* CONSOLE GP-FRONT

**S/N: BXC1-UP; DSX1-UP**
**PART OF 214-7015 POWER TRAIN AR**
**AN ATTACHMENT**

**SMCS-5258** **i01994483**

| NOTE | REF NO | GRAPHIC REF | PART NUMBER | QTY | PART NAME 1 2 3 4 5 6 (PRODUCT LEVEL) | SEE PAGE |
|---|---|---|---|---|---|---|
| | 1 | 1 | **8Y-6388** | 1 | LOUVER AS | |
| | 2 | 1 | **164-8473** | 5 | LOUVER AS | |
| | 3 | 1 | **237-7162** | 1 | CONSOLE-FRONT | |
| | 4 | 1 | **104-2091** | 22 | SCREW-FLAT HEAD (6-20X0.5 IN) | |

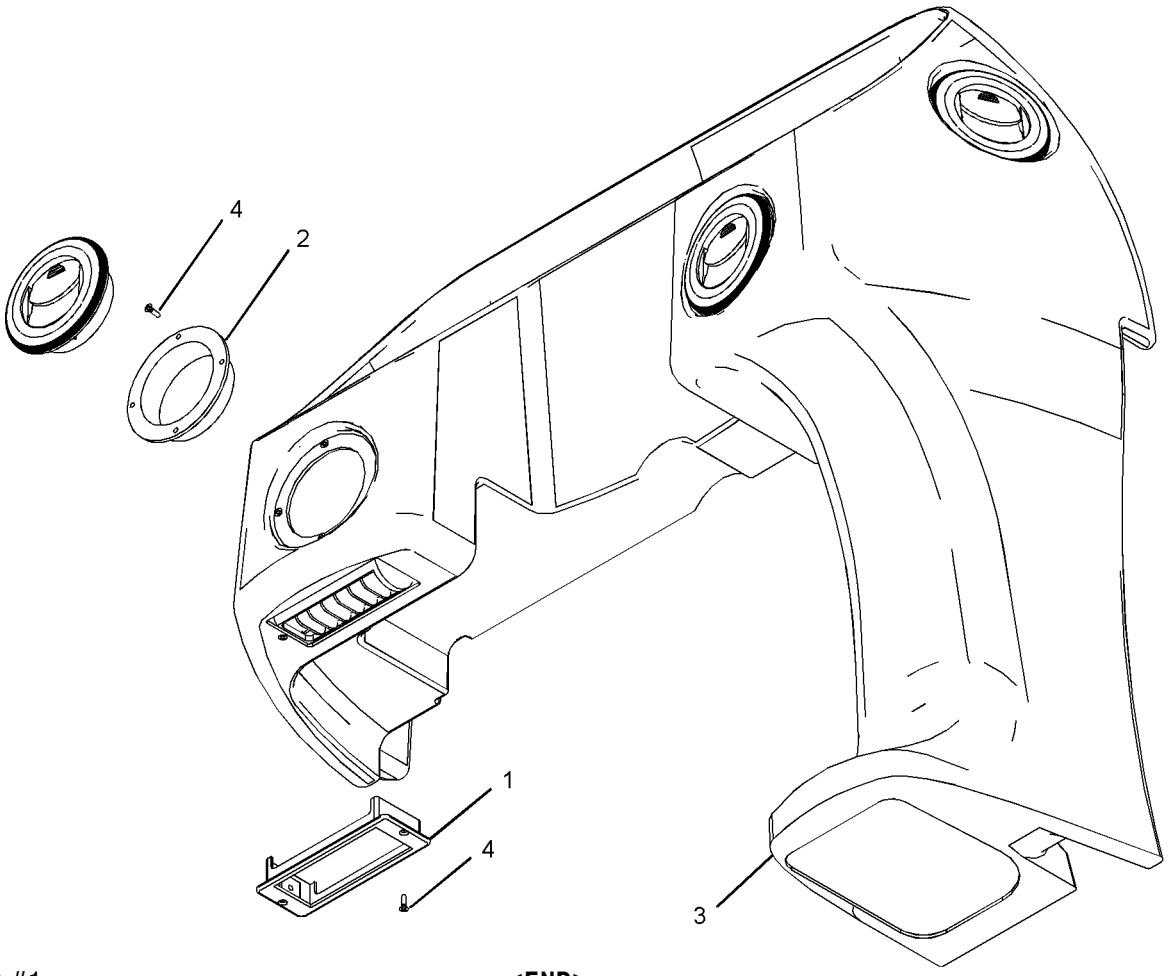


GRAPHIC #1 **<END>** g01033546

# OPERATOR STATION

## *164-1389* CONSOLE GP-OPERATOR–LH

**S/N: BXC1-UP; DSX1-UP**
**PART OF 214-7006 CAB AR, 214-7004 CANOPY AR**
**AN ATTACHMENT**

**SMCS-5258, 7451** **i01665858**

| NOTE | REF NO | GRAPHIC REF | PART NUMBER | QTY | PART NAME 1 2 3 4 5 6 (PRODUCT LEVEL) | SEE PAGE |
|---|---|---|---|---|---|---|
| B | 1 | 1 | **9P-6571** | 3 | PLUG | |
| Y | 2 | 1 | *164-1132* | 1 | CONSOLE GP-SIDE (LH) | 722 |
| M | 3 | 1 | **178-9983** | 3 | LOCKNUT | |
| M | 4 | 1 | **8T-3998** | 3 | BOLT (M4X0.7X12MM) | |
| | 5 | 1 | **9X-2038** | 4 | WASHER (7X19X2MM THK) | |
| M | 6 | 1 | **9X-2044** | 4 | SCREW-TRUSS HEAD (M6X1X16MM) | |

B-USE AS REQUIRED
M-METRIC PART
Y-SEPARATE ILLUSTRATION

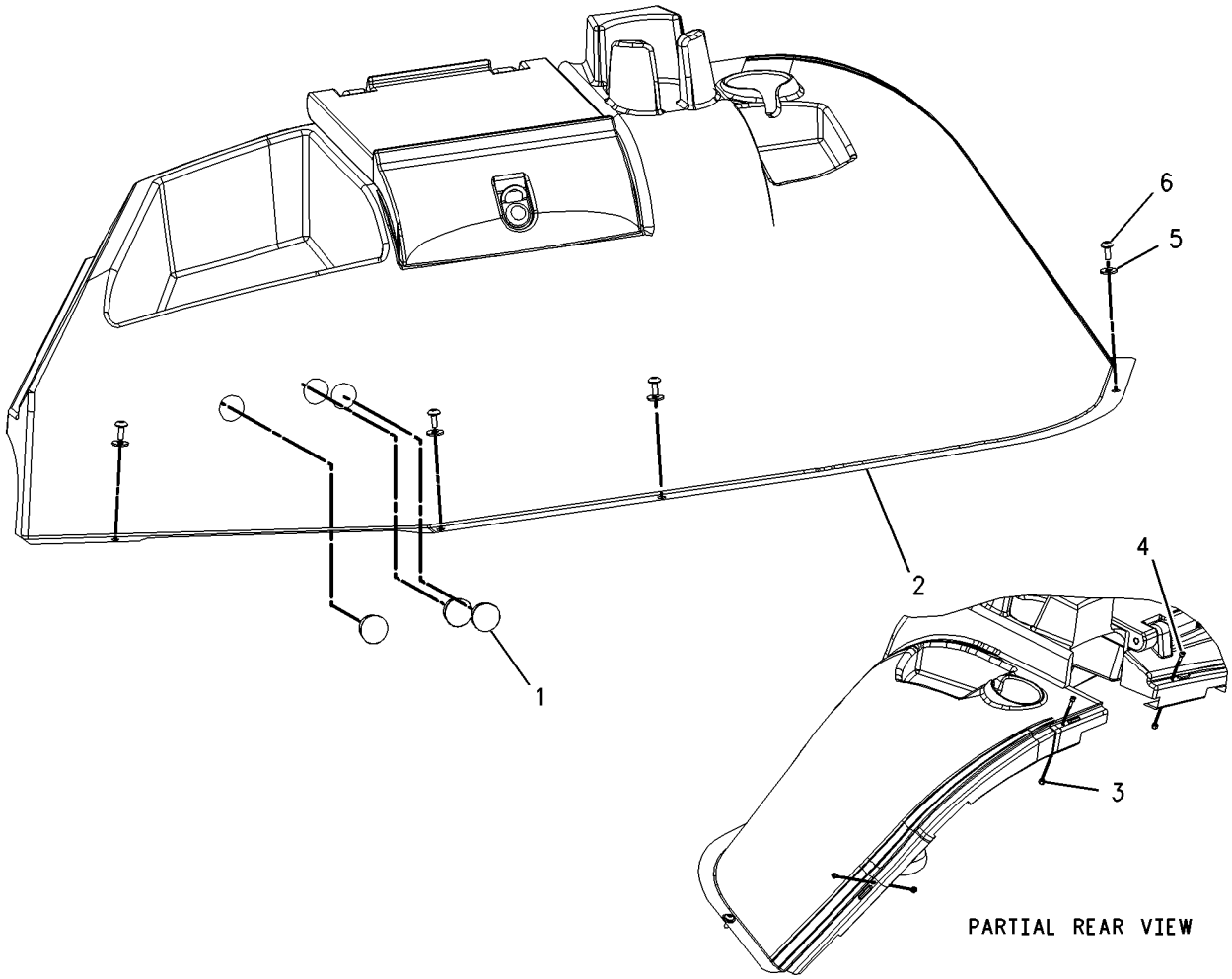


GRAPHIC #1 **<END>** g00861135

# OPERATOR STATION

## *185-3524* CONSOLE GP-OPERATOR–RH

**S/N: BXC1-UP; DSX1-UP**

**PART OF 214-7006, 214-7007 CAB AR, 214-7008, 214-7009 CAB AR-ENCLOSED ROPS AN ATTACHMENT**

**SMCS-5258, 7451** **i01555553**

| NOTE | REF NO | GRAPHIC REF | PART NUMBER | QTY | PART NAME 1 2 3 4 5 6 (PRODUCT LEVEL) | SEE PAGE |
|---|---|---|---|---|---|---|
| BC | 1 | 1 | **9P-6571** | 1 | PLUG | |
| M | 2 | 1 | **178-9983** | 4 | LOCKNUT | |
| Y | 3 | 1 | *183-4998* | 1 | CONSOLE GP-SIDE (RH) | 725 |
| | 4 | 1 | **205-9980** | 4 | SCREW-TRUSS HEAD | |
| CM | 5 | 1 | **8T-3998** | 4 | BOLT (M4X0.7X12MM) | |
| M | 6 | 1 | **9X-2044** | 5 | SCREW-TRUSS HEAD (M6X1X16MM) | |

B-USE AS REQUIRED
C-CHANGE FROM PREVIOUS TYPE
M-METRIC PART
Y-SEPARATE ILLUSTRATION

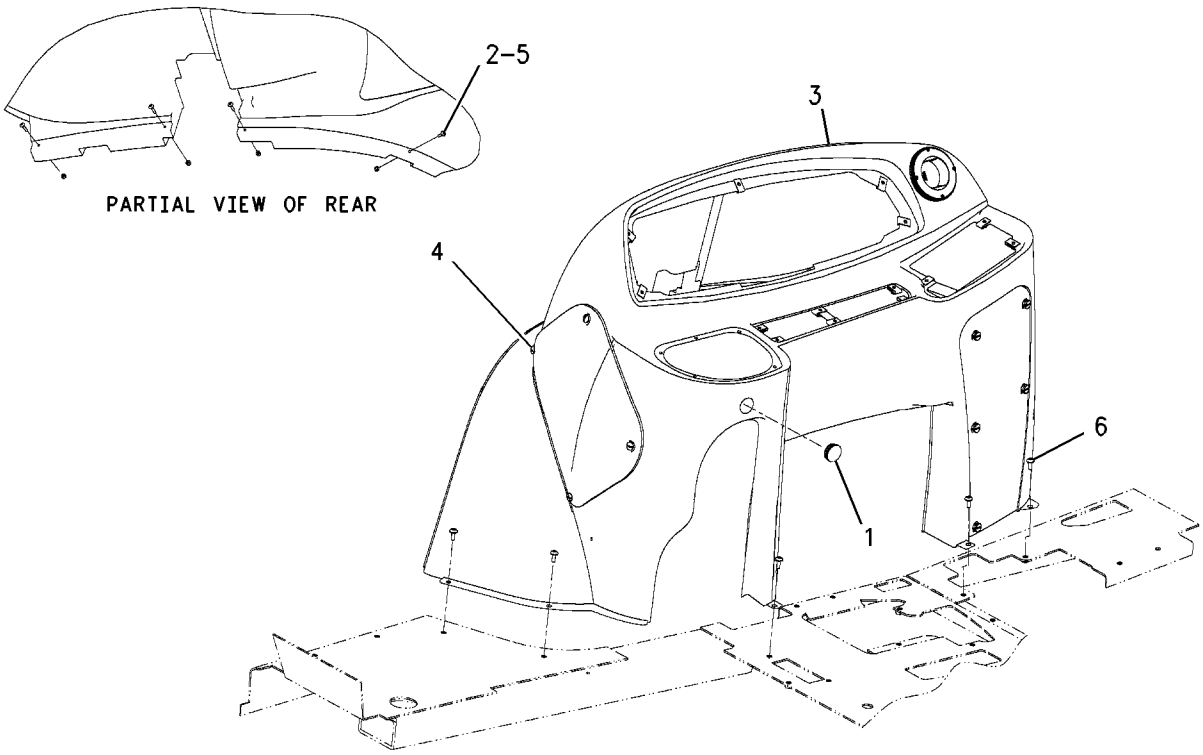


GRAPHIC #1 **<END>** g00808569

# OPERATOR STATION

## *164-1131* CONSOLE GP-SIDE—LH—AIR CONDITIONING

**S/N: BXC1-UP; DSX1-UP**
**PART OF 164-1388 CONSOLE GP-SIDE**
**AN ATTACHMENT**

**SMCS-7451** **i01488091**

| NOTE | REF NO | GRAPHIC REF | PART NUMBER | QTY | PART NAME 1 2 3 4 5 6 (PRODUCT LEVEL) | SEE PAGE |
|---|---|---|---|---|---|---|
| J | 1 | 1 | **5P-9000** | 1 | LOCK AS-CYLINDER | |
| | 2 | 1 | **118-5503** | 2 | LOUVER AS | |
| | 3 | 1 | **200-2673** | 1 | PLATE | |
| | 4 | 1 | **164-1133** | 1 | COVER | |
| | 5 | 1 | **164-1134** | 1 | PIN | |
| | 6 | 1 | **167-8252** | 1 | CONSOLE-LH | |
| | 7 | 1 | **188-7760** | 1 | PLATE | |
| | 8 | 1 | **104-2091** | 8 | SCREW-FLAT HEAD (6-20X0.5 IN) | |
| J-REQUIRES 5P8500 KEY | | | | | | |

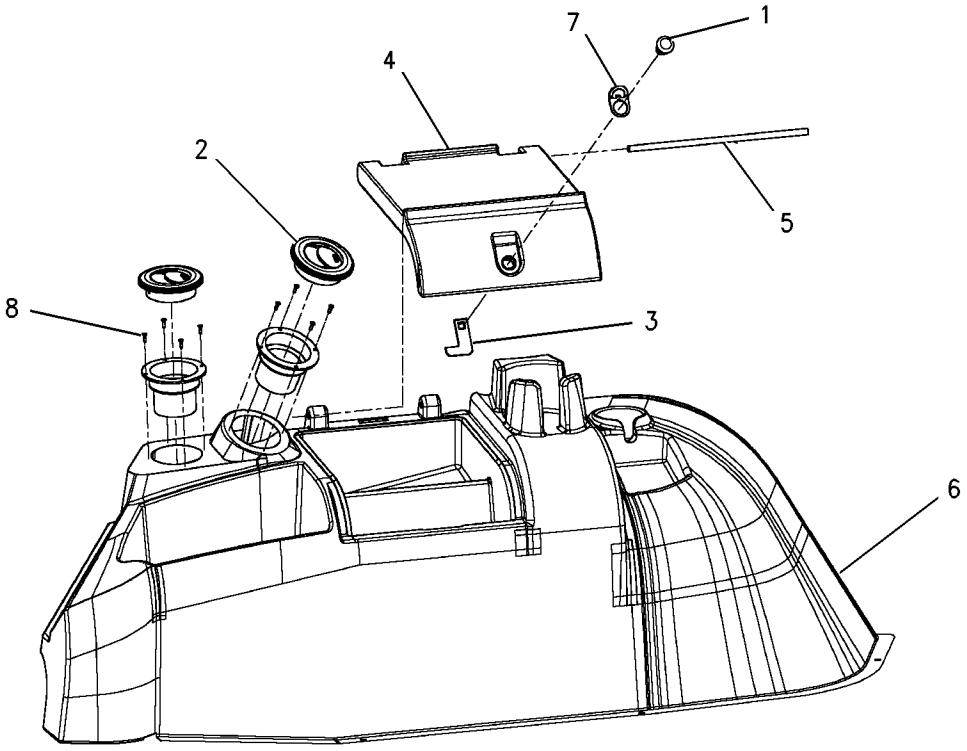


EXPLODED VIEW

GRAPHIC #1 **<END>** g00755839

# OPERATOR STATION

## *164-1132* CONSOLE GP-SIDE–LH

**S/N: BXC1-UP; DSX1-UP**
**PART OF 164-1389 CONSOLE GP-OPERATOR**
**AN ATTACHMENT**

**SMCS-7451** **i01596469**

| NOTE | REF NO | GRAPHIC REF | PART NUMBER | QTY | PART NAME 1 2 3 4 5 6 (PRODUCT LEVEL) | SEE PAGE |
|---|---|---|---|---|---|---|
| J | 1 | 1 | **5P-9000** | 1 | LOCK AS-CYLINDER | |
| | 2 | 1 | **164-1133** | 1 | COVER | |
| | 3 | 1 | **164-1134** | 1 | PIN | |
| | 4 | 1 | **183-4899** | 1 | CONSOLE-LH | |
| | 5 | 1 | **188-7760** | 1 | PLATE | |
| | 6 | 1 | **200-2673** | 1 | PLATE | |

J-REQUIRES A 5P-8500 KEY

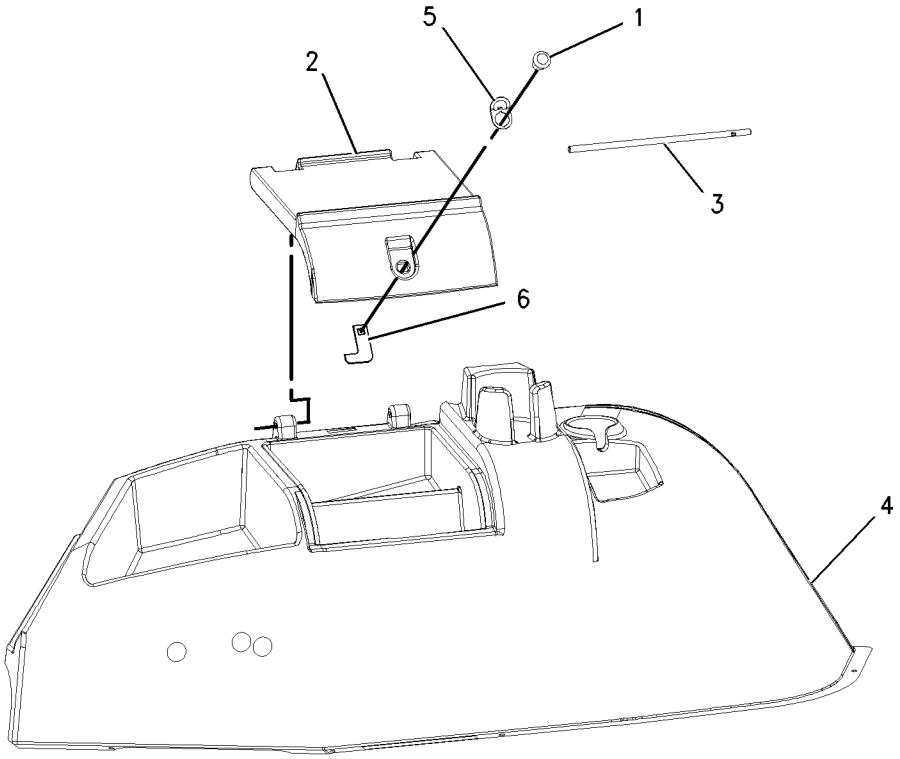


GRAPHIC #1 **<END>** g00828680

# OPERATOR STATION

## *164-1388* CONSOLE GP-SIDE—LH—AIR CONDITIONING

**S/N: BXC1-UP; DSX1-UP**

**PART OF 214-7007 CAB AR, 214-7008, 214-7009 CAB AR-ENCLOSED ROPS**

**AN ATTACHMENT**

**SMCS-7451** **i01665832**

| NOTE | REF NO | GRAPHIC REF | PART NUMBER | QTY | PART NAME 1 2 3 4 5 6 (PRODUCT LEVEL) | SEE PAGE |
|---|---|---|---|---|---|---|
| B | 1 | 1 | **9P-6571** | 3 | PLUG | |
| Y | 2 | 1 | *164-1131* | 1 | CONSOLE GP-SIDE | 721 |
| M | 3 | 1 | **178-9983** | 3 | LOCKNUT | |
| | 4 | 1 | **184-6558** | 1 | HOSE | |
| | 5 | 1 | **184-6566** | 1 | GASKET | |
| | 6 | 1 | **198-6886** | 1 | PLATE | |
| M | 7 | 1 | **8T-3998** | 3 | BOLT (M4X0.7X12MM) | |
| | 8 | 1 | **9X-2038** | 3 | WASHER (7X19X2MM THK) | |
| M | 9 | 1 | **9X-2044** | 4 | SCREW-TRUSS HEAD (M6X1X16MM) | |

B-USE AS REQUIRED
M-METRIC PART
Y-SEPARATE ILLUSTRATION

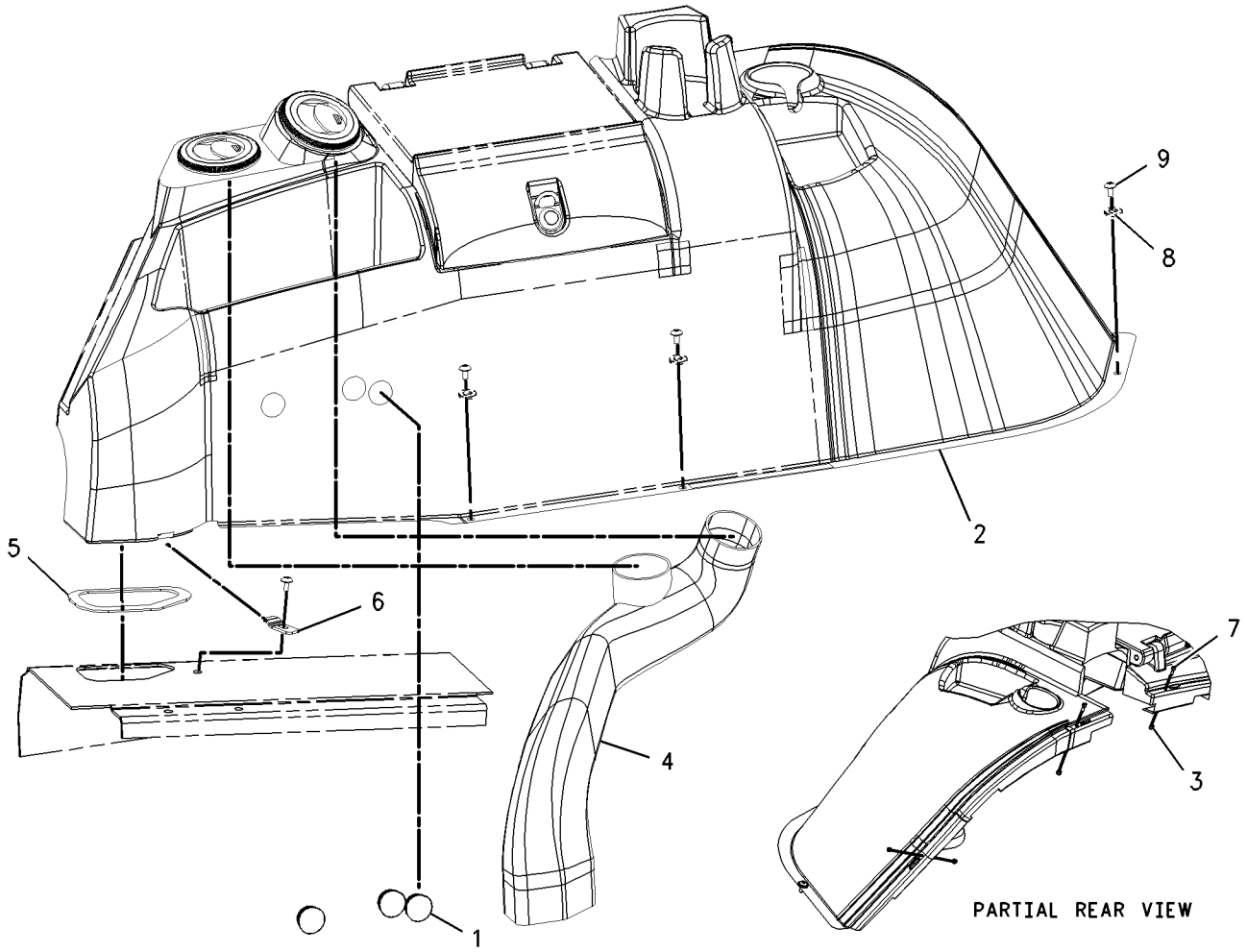


GRAPHIC #1 **<END>** g00860220

# OPERATOR STATION

## *183-4997* CONSOLE GP-SIDE

**S/N: BXC1-UP; DSX1-UP**
**PART OF 185-3530 CONSOLE GP-SIDE**
**AN ATTACHMENT**

**SMCS-7451** **i01660383**

| NOTE | REF NO | GRAPHIC REF | PART NUMBER | QTY | PART NAME 1 2 3 4 5 6 (PRODUCT LEVEL) | SEE PAGE |
|---|---|---|---|---|---|---|
| | 1 | 1 | **164-1178** | 5 | CLIP | |
| | 2 | 1 | **172-8591** | 16 | NUT-SPRING | |
| Y | 3 | 1 | *183-4991* | 1 | COVER GP-CONSOLE | 727 |
| | 4 | 1 | **202-6141** | 1 | CONSOLE | |
| | 5 | 1 | **204-7341** | 1 | COVER-FUSE | |

Y-SEPARATE ILLUSTRATION

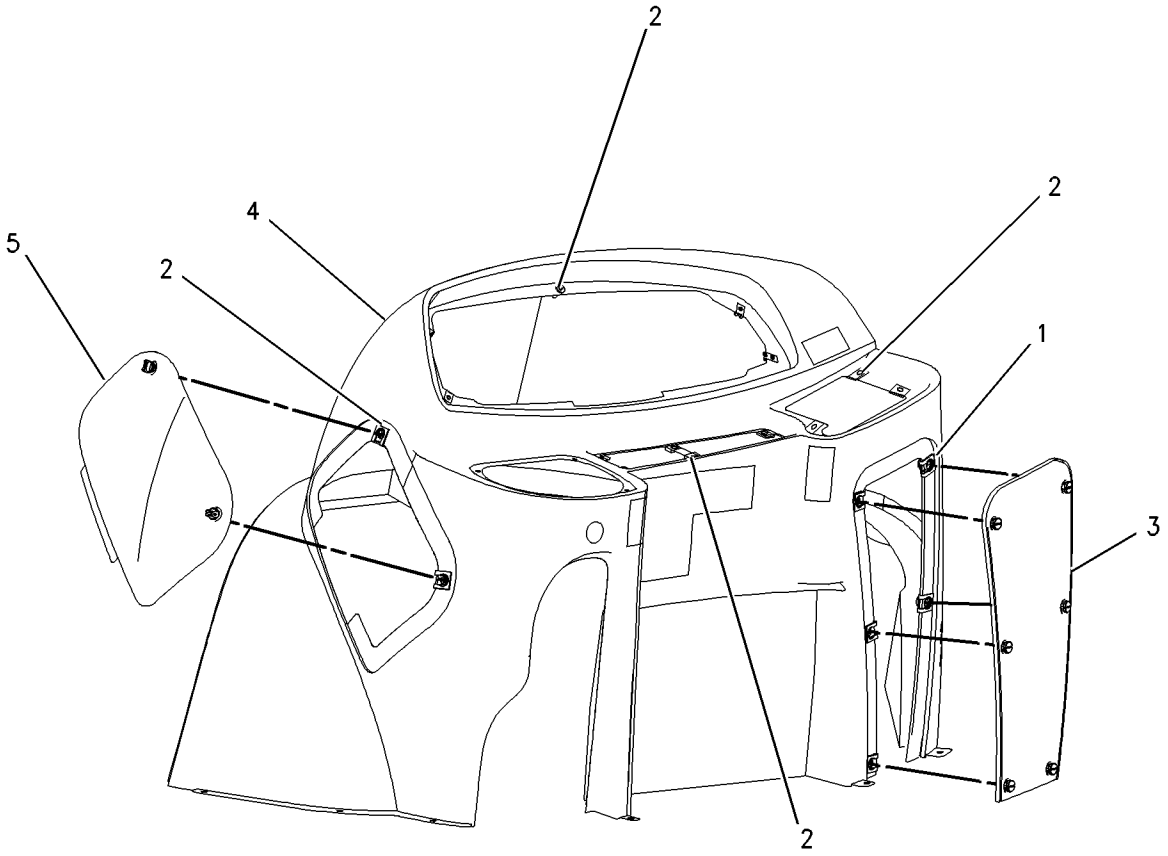


GRAPHIC #1 **<END>** g00857012

# OPERATOR STATION

## *183-4998* CONSOLE GP-SIDE

**S/N: BXC1-UP; DSX1-UP**
**PART OF 185-3524 CONSOLE GP-OPERATOR**
**AN ATTACHMENT**

**SMCS-7451** **i01663889**

| NOTE | REF NO | GRAPHIC REF | PART NUMBER | QTY | PART NAME 1 2 3 4 5 6 (PRODUCT LEVEL) | SEE PAGE |
|---|---|---|---|---|---|---|
| | 1 | 1 | **118-5503** | 1 | LOUVER AS | |
| C | 2 | 1 | **164-1178** | 5 | CLIP | |
| C | 3 | 1 | **172-8591** | 16 | NUT-SPRING | |
| Y | 4 | 1 | *183-4991* | 1 | COVER GP-CONSOLE | 727 |
| C | 5 | 1 | **202-6142** | 1 | CONSOLE-SIDE | |
| | 6 | 1 | **204-7341** | 1 | COVER-FUSE | |
| | 7 | 1 | **104-2091** | 4 | SCREW-FLAT HEAD (6-20X0.5 IN) | |

C-CHANGE FROM PREVIOUS TYPE
Y-SEPARATE ILLUSTRATION

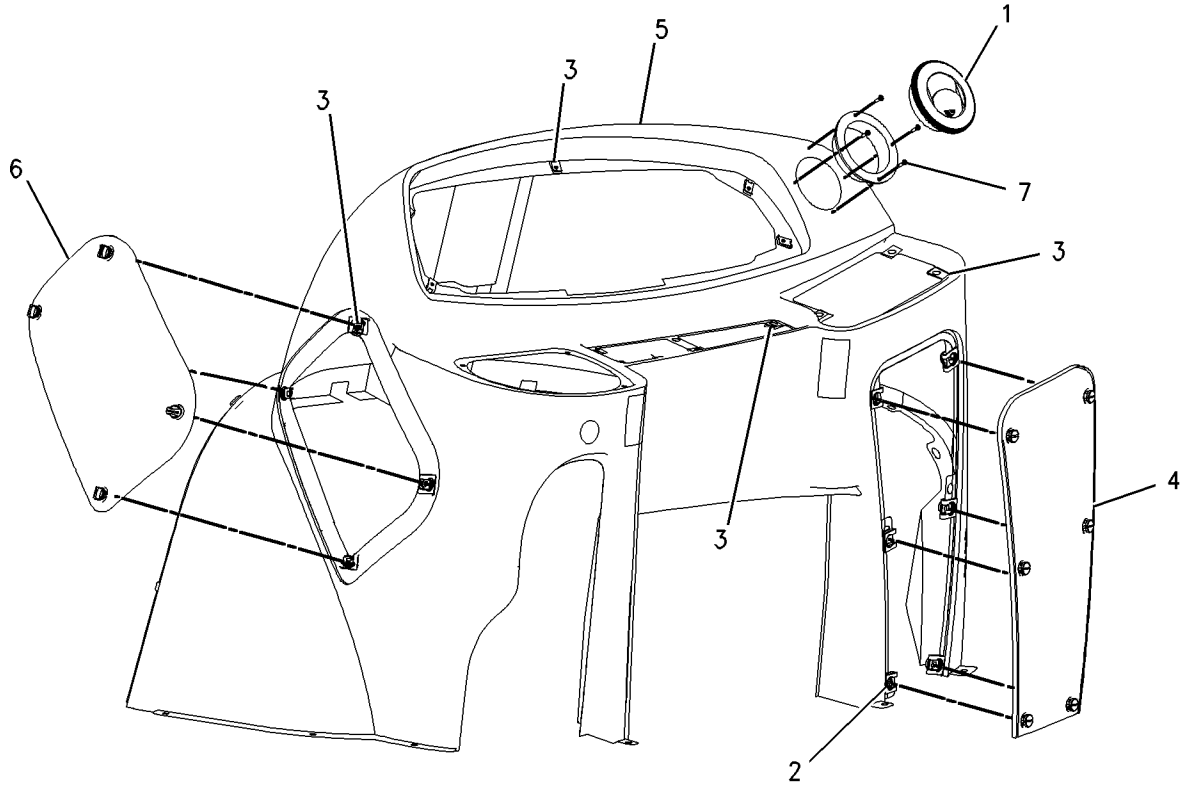


GRAPHIC #1 **<END>** g00859080

# OPERATOR STATION

## *185-3530* CONSOLE GP-SIDE

**S/N: BXC1-UP; DSX1-UP**
**PART OF 214-7004 CANOPY AR**
**AN ATTACHMENT**

**SMCS-7451** **i01968303**

| NOTE | REF NO | GRAPHIC REF | PART NUMBER | QTY | PART NAME 1 2 3 4 5 6 (PRODUCT LEVEL) | SEE PAGE |
|---|---|---|---|---|---|---|
| B | 1 | 1 | **9P-6571** | 1 | PLUG | |
| | 2 | 1 | **164-1107** | 1 | CONSOLE-STORAGE | |
| M | 3 | 1 | **178-9983** | 4 | LOCKNUT (M4X0.7 THD) | |
| Y | 4 | 1 | *183-4997* | 1 | CONSOLE GP-SIDE | 724 |
| | 5 | 1 | **184-6557** | 1 | CONSOLE | |
| | 6 | 1 | **205-9980** | 4 | SCREW-TRUSS HEAD | |
| M | 7 | 1 | **8T-3998** | 4 | BOLT (M4X0.7X12MM) | |
| | 8 | 1 | **9X-2038** | 2 | WASHER (7X19X2MM THK) | |
| M | 9 | 1 | **9X-2044** | 5 | SCREW-TRUSS HEAD (M6X1X16MM) | |
| M | 10 | 1 | **121-9870** | 2 | SCREW-MACHINE (M6X1X40MM) | |

B-USE AS REQUIRED
M-METRIC PART
Y-SEPARATE ILLUSTRATION

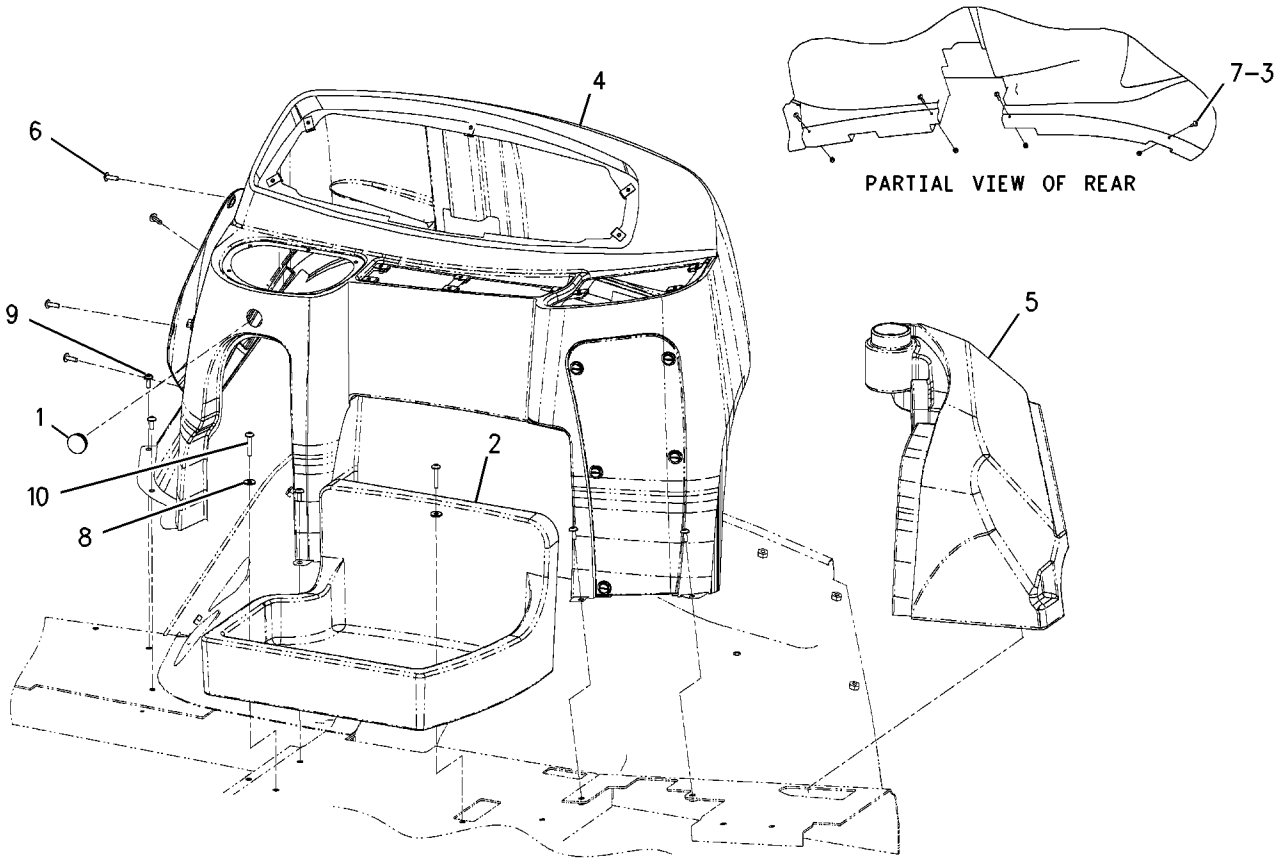


GRAPHIC #1 **<END>** g00808588

# OPERATOR STATION

## *183-4991* COVER GP-CONSOLE

**S/N: BXC1-UP; DSX1-UP**
**BOOM LOCK**
**PART OF 183-4997, 183-4998 CONSOLE GP-SIDE**
**AN ATTACHMENT**

**SMCS-5258** **i01482398**

| NOTE | REF NO | GRAPHIC REF | PART NUMBER | QTY | PART NAME 1 2 3 4 5 6 (PRODUCT LEVEL) | SEE PAGE |
|---|---|---|---|---|---|---|
| | 1 | 1 | **117-3789** | 5 | RETAINER-STUD | |
| | 2 | 1 | **164-1108** | 1 | COVER | |
| | 3 | 1 | **167-8251** | 5 | STUD | |

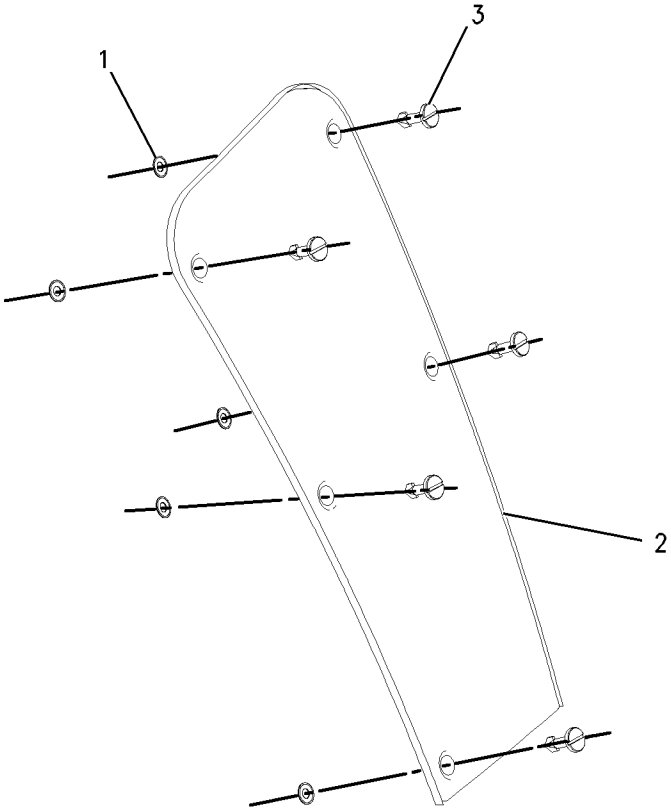


GRAPHIC #1 **<END>** g00744971

# OPERATOR STATION

## *186-0252* COVER GP-FIREWALL

**S/N: BXC1-UP; DSX1-UP**
**PART OF 214-7006, 214-7007 CAB AR, 214-7008, 214-7009 CAB AR-ENCLOSED ROPS, 214-7004 CANOPY AR**
**AN ATTACHMENT**

**SMCS-7262** **i01668212**

| NOTE | REF NO | GRAPHIC REF | PART NUMBER | QTY | PART NAME 1 2 3 4 5 6 (PRODUCT LEVEL) | SEE PAGE |
|---|---|---|---|---|---|---|
| | 1 | 1 | **164-1137** | 1 | COVER-FIREWALL | |
| | 2 | 1 | **9X-2038** | 12 | WASHER (7X19X2MM THK) | |
| M | 3 | 1 | **9X-2045** | 12 | SCREW-TRUSS HEAD (M6X1X20MM) | |

M-METRIC PART

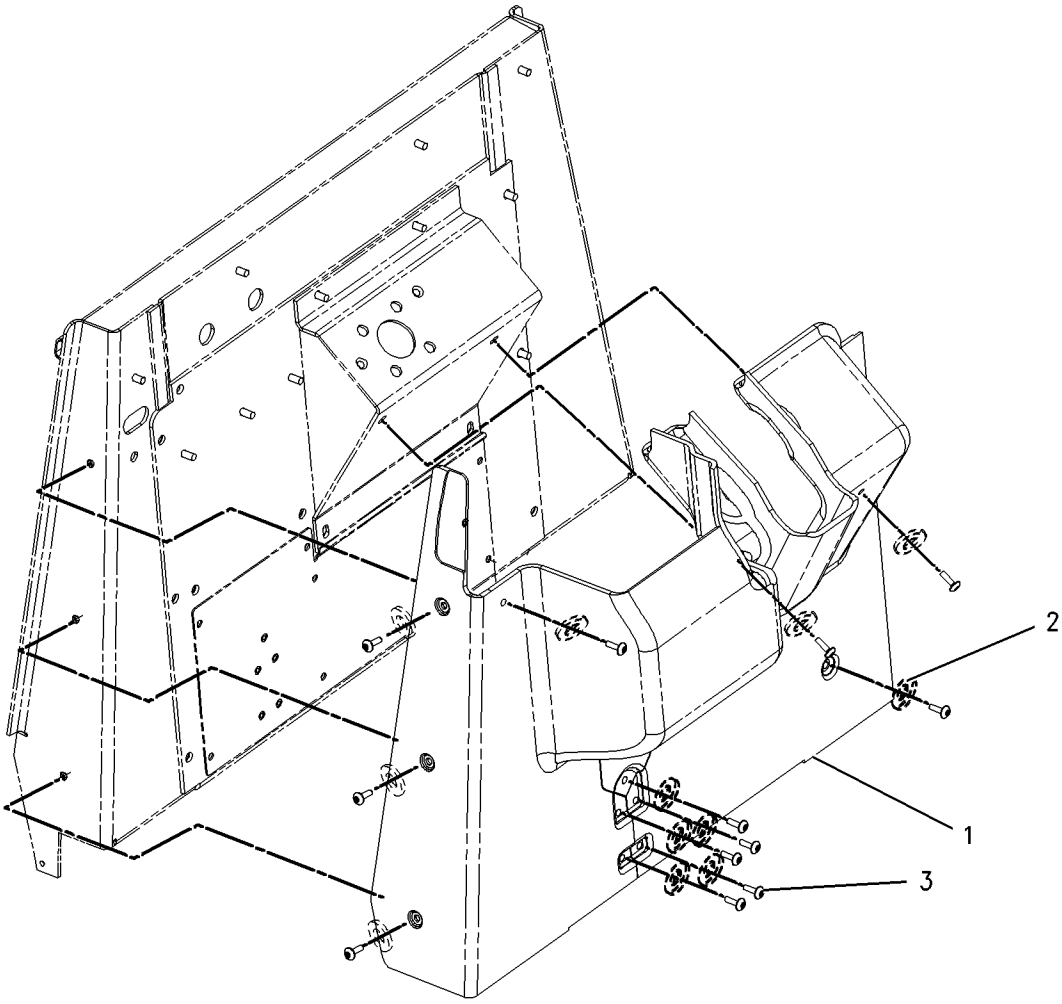


GRAPHIC #1 **<END>** g00861665

# OPERATOR STATION

## *198-0104* COVER GP-FIREWALL

**S/N: BXC1-UP; DSX1-UP**
**PART OF 214-7004 CANOPY AR**
**AN ATTACHMENT**

**SMCS-7262** **i01535906**

| NOTE | REF NO | GRAPHIC REF | PART NUMBER | QTY | PART NAME 1 2 3 4 5 6 (PRODUCT LEVEL) | SEE PAGE |
|---|---|---|---|---|---|---|
| E | 1 | 1 | **126-8472** | | SEAL (84CM) | |
| | 2 | 1 | **198-0103** | 1 | PLATE | |
| | 3 | 1 | **8T-4121** | 1 | WASHER-HARD (11X21X2.5MM THK) | |
| M | 4 | 1 | **8T-4137** | 1 | BOLT (M10X1.5X20MM) | |

E-ORDER BY THE CENTIMETER
M-METRIC PART

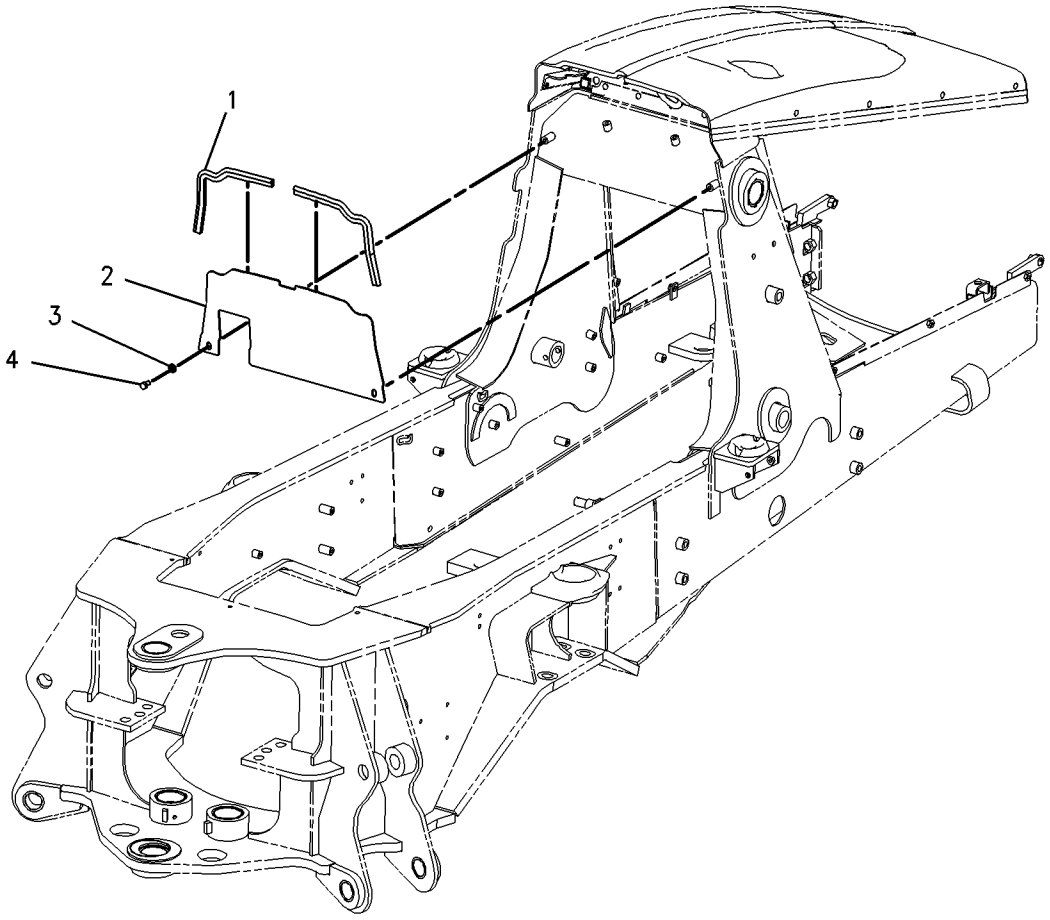


GRAPHIC #1 **<END>** g00797673

# OPERATOR STATION

## 197-7564 COVER GP-POST

**S/N: BXC1-UP; DSX1-UP**
**RH**
**PART OF 214-7004 CANOPY AR**
**AN ATTACHMENT**

**SMCS-7329** **i01987995**

| NOTE | REF NO | GRAPHIC REF | PART NUMBER | QTY | PART NAME 1 2 3 4 5 6 (PRODUCT LEVEL) | SEE PAGE |
|---|---|---|---|---|---|---|
| E | 1 | 1 | **129-1854** | 5 | FASTENER-LOOP (18CM EA) | |
| E | 2 | 1 | **129-1855** | 5 | FASTENER-HOOK (18CM EA) | |
| | 3 | 1 | **197-7230** | 1 | COVER-POST | |
| | 4 | 1 | **9X-2038** | 2 | WASHER (7X19X2MM THK) | |
| M | 5 | 1 | **9X-2042** | 2 | SCREW-TRUSS HEAD (M6X1X12MM) | |
| E | 6 | 1 | **129-1854** | | FASTENER-LOOP (10CM) | |
| E | 7 | 1 | **129-1855** | | FASTENER-HOOK (10CM) | |
| E | 8 | 1 | **129-1854** | | FASTENER-LOOP (8CM) | |
| E | 9 | 1 | **129-1855** | | FASTENER-HOOK (8CM) | |

E-ORDER BY THE CENTIMETER
M-METRIC PART

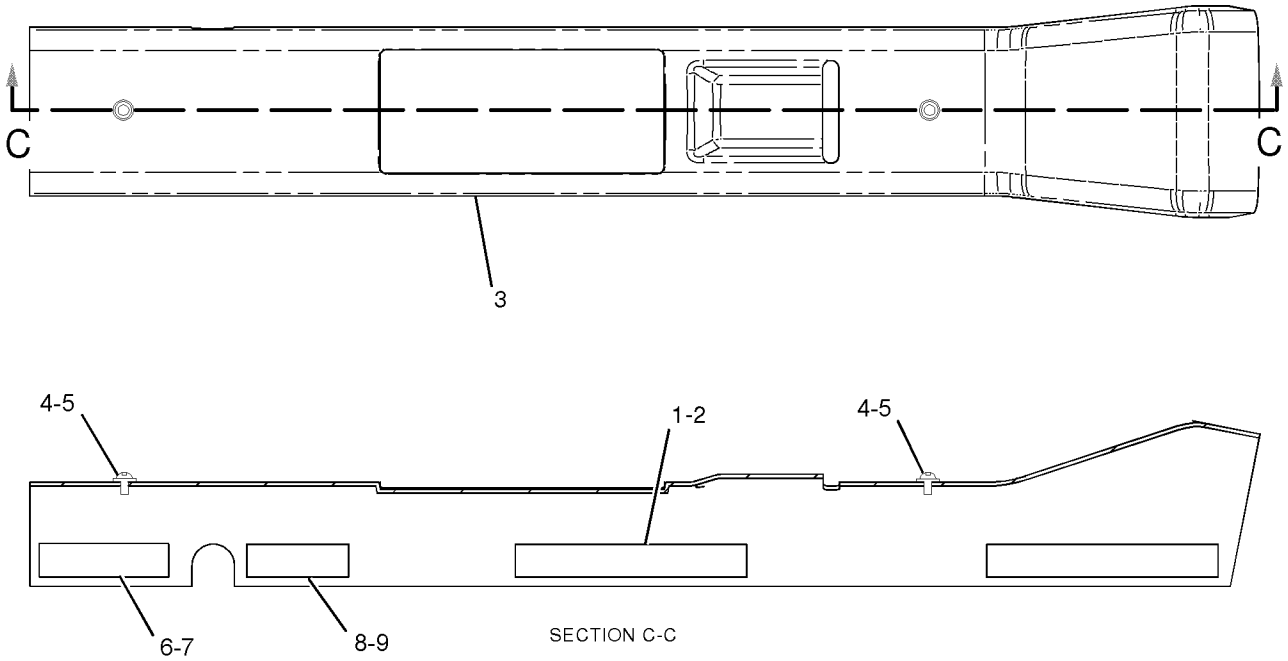


GRAPHIC #1 **<END>** g01028944

# OPERATOR STATION

## *164-1062* DOOR GP-LH

**S/N: BXC1-UP; DSX1-UP**
**PART OF 164-1100, 226-9095 CAB GP**
**AN ATTACHMENT**

**SMCS-7308** **i01374549**

| NOTE | REF NO | GRAPHIC REF | PART NUMBER | QTY | PART NAME 1 2 3 4 5 6 (PRODUCT LEVEL) | SEE PAGE |
|---|---|---|---|---|---|---|
| | 1 | 1 | **159-4269** | 1 | SPRING AS-GAS | |
| | | 1 | **161-9044** | 1 | KIT-FITTING | |
| E | 2 | 1 | **148-5355** | | SEAL (478CM) | |
| | 3 | 1 | **5P-4116** | 2 | WASHER (8.8X20.5X2MM THK) | |
| M | 4 | 1 | **8T-4171** | 1 | BOLT (M6X1.0X12MM) | |
| | 5 | 1 | **7X-2497** | 1 | HANDLE-DOOR | |
| | 6 | 1 | **159-4953** | 1 | DOOR AS-LH | |
| M | | 1 | **8T-3612** | 1 | NUT-WELD (M8X1.25 THD) | |
| | | 1 | **8Y-7310** | 2 | HINGE AS-LH | |
| Y | 7 | 1 | *164-1074* | 1 | WINDOW GP-DOOR | 795 |
| | 8 | 1 | **8Y-7264** | 1 | GLASS | |
| M | 9 | 1 | **8T-4180** | 4 | SCREW-MACHINE (M5X0.8X20MM) | |
| | 10 | 1 | **8Y-6386** | 1 | SEAL-HANDLE | |
| | 11 | 1 | **148-7319** | 1 | HANDLE AS-PADDLE | |
| | 12 | 1 | **147-3019** | 2 | BRACKET | |
| | 13 | 1 | **8Y-7306** | 1 | COVER | |
| M | 14 | 1 | **131-3987** | 6 | SCREW (M4X0.7X12MM) | |
| | 15 | 1 | **148-7311** | 1 | LATCH AS-ROTARY | |
| M | 16 | 1 | **8T-4181** | 4 | BOLT (M6X1X20MM) | |
| | 17 | 1 | **159-4946** | 1 | KEEPER-REAR | |

E-ORDER BY THE CENTIMETER
M-METRIC PART
Y-SEPARATE ILLUSTRATION

*164-1062* **DOOR GP-LH** *(contd.)* **i01374549**

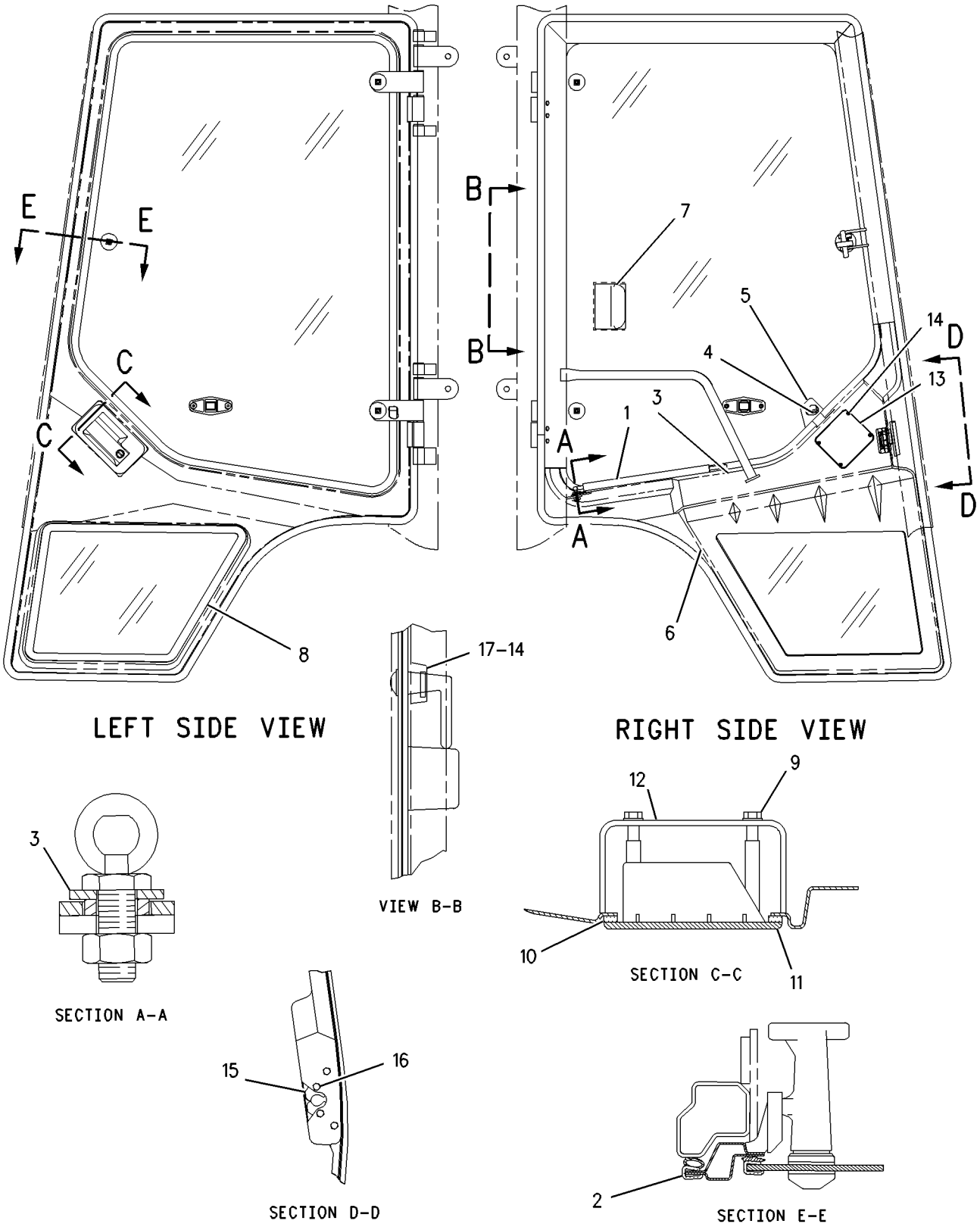


GRAPHIC #1 **<END>** g00725879

# OPERATOR STATION

## 164-1061 DOOR GP-RH

**S/N: BXC1-UP; DSX1-UP**
**PART OF 164-1100, 226-9095 CAB GP**
**AN ATTACHMENT**

**SMCS-7308** **i01380267**

| NOTE | REF NO | GRAPHIC REF | PART NUMBER | QTY | PART NAME 1 2 3 4 5 6 (PRODUCT LEVEL) | SEE PAGE |
|---|---|---|---|---|---|---|
| J | 1 | 1 | **159-4269** | 1 | SPRING AS-GAS | |
| E | 2 | 1 | **148-5355** | | SEAL (478CM) | |
| | 3 | 1 | **5P-4116** | 2 | WASHER (8.8X20.5X2MM THK) | |
| M | 4 | 1 | **8T-4171** | 1 | BOLT (M6X1.0X12MM) | |
| | 5 | 1 | **7X-2497** | 1 | HANDLE-DOOR | |
| | 6 | 1 | **159-4954** | 1 | DOOR AS-RH | |
| M | | 1 | **8T-3612** | 1 | NUT-WELD (M8X1.25 THD) | |
| | | 1 | **8Y-7310** | 2 | HINGE AS-LH | |
| Y | 7 | 1 | **164-1073** | 1 | WINDOW GP-DOOR | 793 |
| | 8 | 1 | **8Y-7263** | 1 | GLASS | |
| M | 9 | 1 | **8T-4180** | 4 | SCREW-MACHINE (M5X0.8X20MM) | |
| | 10 | 1 | **8Y-6386** | 1 | SEAL-HANDLE | |
| L | 11 | 1 | **148-7318** | 1 | HANDLE AS-PADDLE | |
| | 12 | 1 | **147-3019** | 2 | BRACKET | |
| | 13 | 1 | **8Y-7306** | 1 | COVER | |
| M | 14 | 1 | **131-3987** | 6 | SCREW (M4X0.7X12MM) | |
| | 15 | 1 | **148-7310** | 1 | LATCH AS-ROTARY | |
| M | 16 | 1 | **8T-4181** | 4 | BOLT (M6X1X20MM) | |
| | 17 | 1 | **159-4945** | 1 | KEEPER-REAR | |
| | | | | | AVAILABLE REPAIR KIT(S): | |
| J | | | **161-9044** | 1 | KIT-FITTING | |

E-ORDER BY THE CENTIMETER
J-REPAIR KIT MARKED J AVAILABLE FOR PART MARKED J
L-REQUIRES A 5P-8500 KEY
M-METRIC PART
Y-SEPARATE ILLUSTRATION

**164-1061 DOOR GP-RH** *(contd.)* **i01380267**

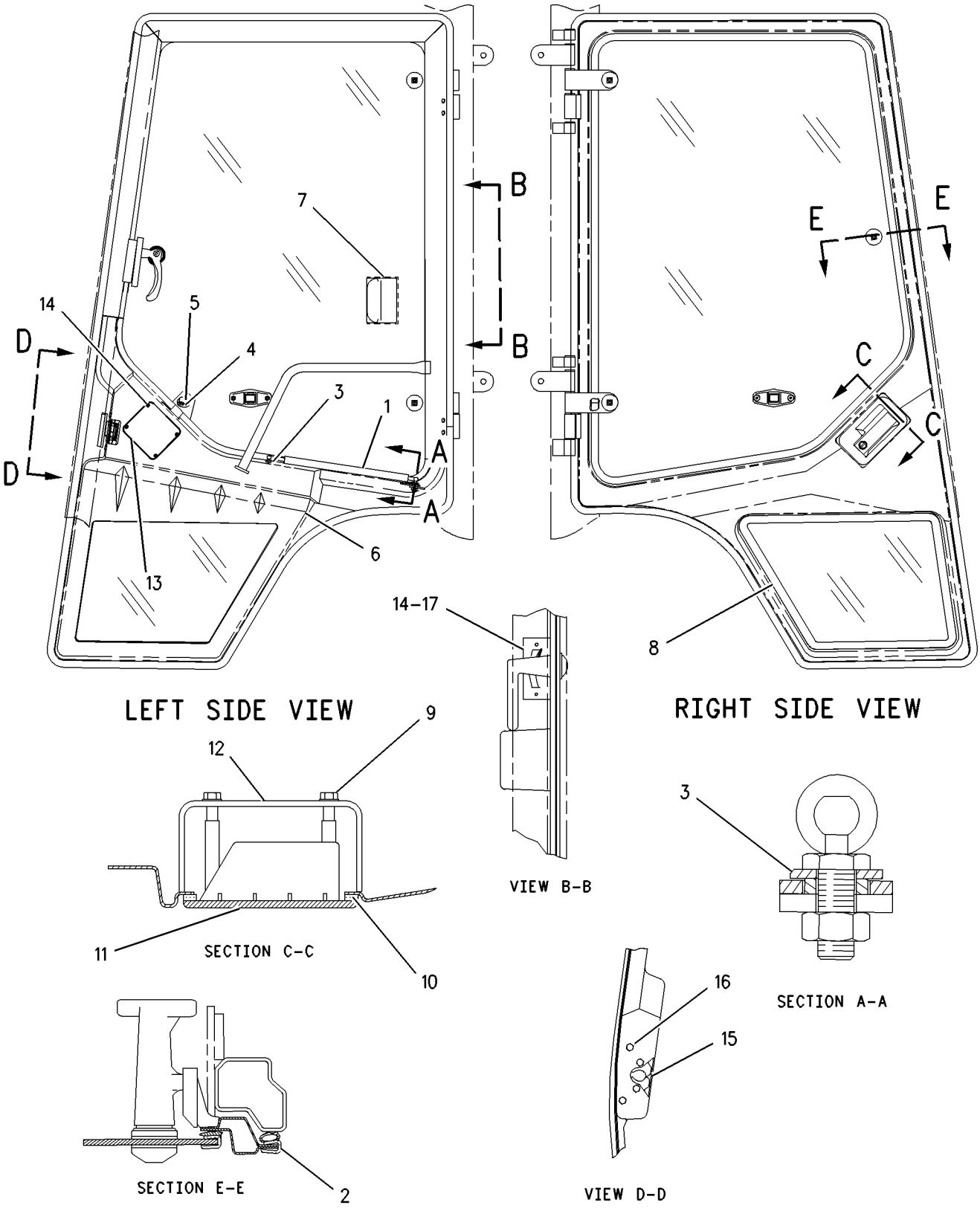


GRAPHIC #1 **<END>** g00728856

# OPERATOR STATION

## *164-1141* DUCT GP-AIR—STANDARD SHIFT

**S/N: BXC1-UP; DSX1-UP**
**PART OF 214-7014 POWER TRAIN AR**
**AN ATTACHMENT**

**SMCS-734D** **i01410806**

| NOTE | REF NO | GRAPHIC REF | PART NUMBER | QTY | PART NAME 1 2 3 4 5 6 (PRODUCT LEVEL) | SEE PAGE |
|---|---|---|---|---|---|---|
| | 1 | 1 | **164-1043** | 1 | DUCT AS-FRONT | |
| | 2 | 1 | **164-1198** | 1 | BOOT | |
| | 3 | 1 | **164-1368** | 4 | CLIP | |
| | 4 | 1 | **184-6562** | 1 | PLATE | |
| | 5 | 1 | **184-6563** | 1 | GASKET | |
| | 6 | 1 | **185-3528** | 1 | SEAL | |
| M | 7 | 1 | **9X-2042** | 2 | SCREW-TRUSS HEAD (M6X1.0X12MM) | |

M-METRIC PART

*164-1141* **DUCT GP-AIR** *(contd. )* **i01410806**

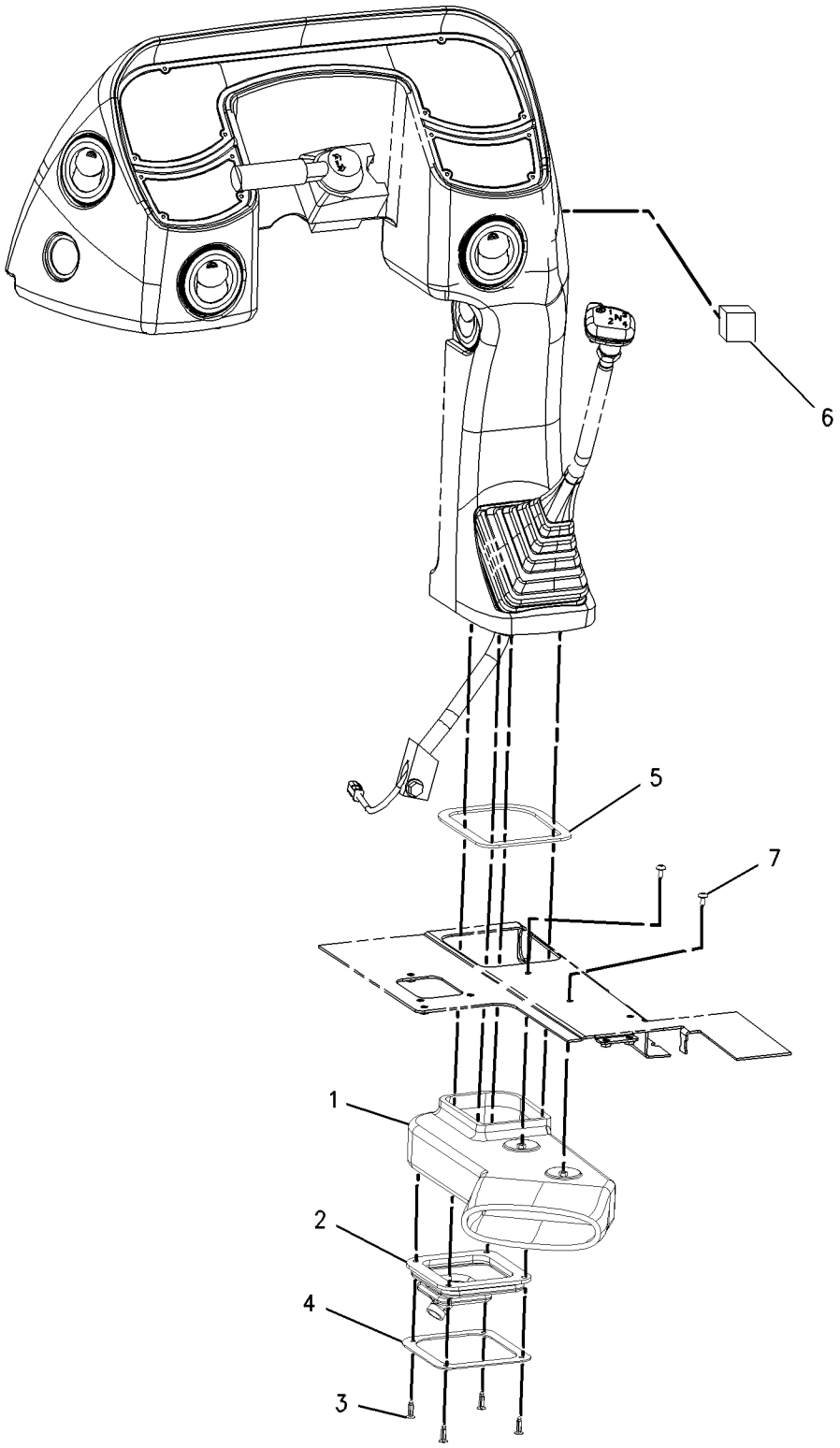


GRAPHIC #1 **<END>** g00742705

# OPERATOR STATION

## *164-1142* DUCT GP-AIR—POWERSHIFT

**S/N: BXC1-UP; DSX1-UP**
**PART OF 214-7015 POWER TRAIN AR**
**AN ATTACHMENT**

**SMCS-734D** **i01430394**

| NOTE | REF NO | GRAPHIC REF | PART NUMBER | QTY | PART NAME 1 2 3 4 5 6 (PRODUCT LEVEL) | SEE PAGE |
|---|---|---|---|---|---|---|
| | 1 | 1 | **164-1044** | 1 | DUCT AS | |
| | 2 | 1 | **184-6563** | 1 | GASKET | |
| | 3 | 1 | **185-3528** | 1 | SEAL | |
| M | 4 | 1 | **9X-2042** | 2 | SCREW-TRUSS HEAD (M6X1X12MM) | |

M-METRIC PART

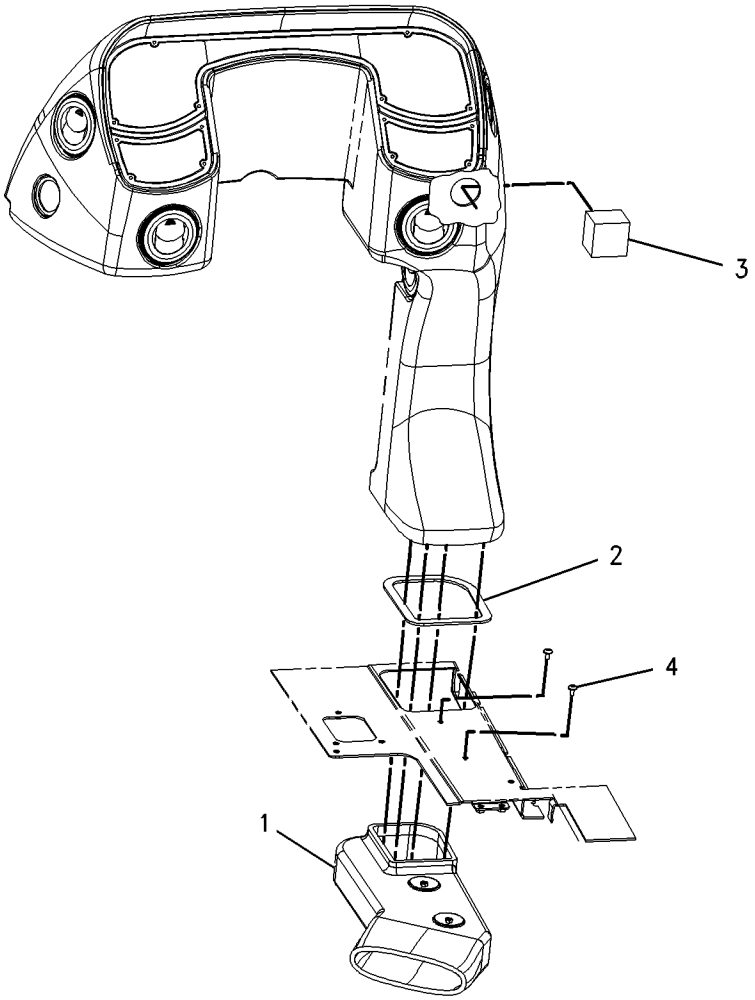


GRAPHIC #1 **<END>** g00750274

# OPERATOR STATION

## *184-6575* DUCT GP-AIR—HEATER

**S/N: BXC1-UP; DSX1-UP**
**PART OF 164-1030 HEATER & MTG GP-CAB**
**AN ATTACHMENT**

**SMCS-734D** **i01385588**

| NOTE | REF NO | GRAPHIC REF | PART NUMBER | QTY | PART NAME 1 2 3 4 5 6 (PRODUCT LEVEL) | SEE PAGE |
|---|---|---|---|---|---|---|
| | 1 | 1 | **151-5715** | 1 | LOUVER AS | |
| | 2 | 1 | **164-8473** | 2 | LOUVER AS | |
| | 3 | 1 | **184-6555** | 1 | DUCT-AIR | |
| | 4 | 1 | **104-2091** | 8 | SCREW-FLAT HEAD (NO.6-20X0.5IN) | |
| | 5 | 1 | **148-3626** | 2 | SCREW-FLAT HEAD | |

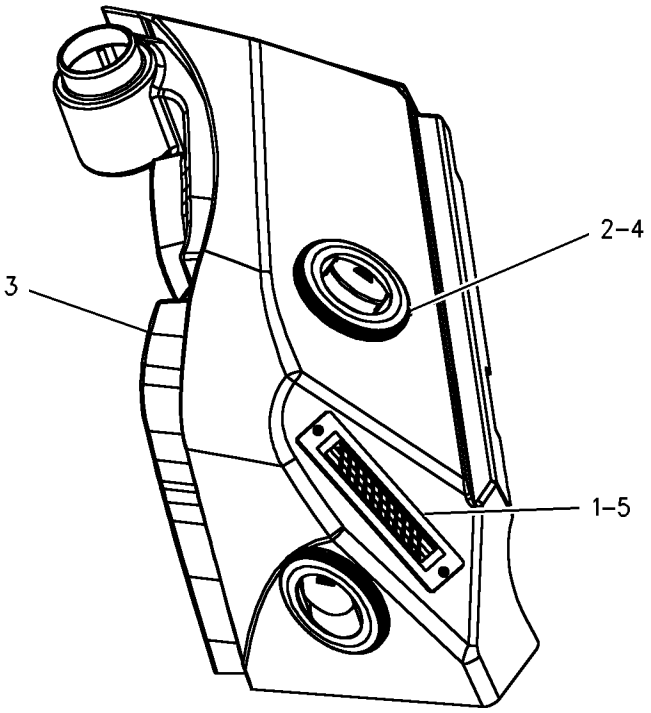


GRAPHIC #1 **<END>** g00732839

# OPERATOR STATION

## *180-5760* FLOOR MAT GP

**S/N: BXC1-UP; DSX1-UP**
**PART OF 214-7007 CAB AR, 214-7008, 214-7009 CAB AR-ENCLOSED ROPS**
**AN ATTACHMENT**

**SMCS-7265** **i01374884**

| NOTE | REF NO | GRAPHIC REF | PART NUMBER | QTY | PART NAME 1 2 3 4 5 6 (PRODUCT LEVEL) | SEE PAGE |
|---|---|---|---|---|---|---|
| | 1 | 1 | **180-5750** | 1 | FLOOR MAT | |
| | 2 | 1 | **180-5754** | 2 | PLATE | |
| | 3 | 1 | **1H-3244** | 4 | LOCKWASHER | |
| M | 4 | 1 | **9X-2045** | 4 | SCREW-TRUSS HEAD (M6X1X20MM) | |

M-METRIC PART

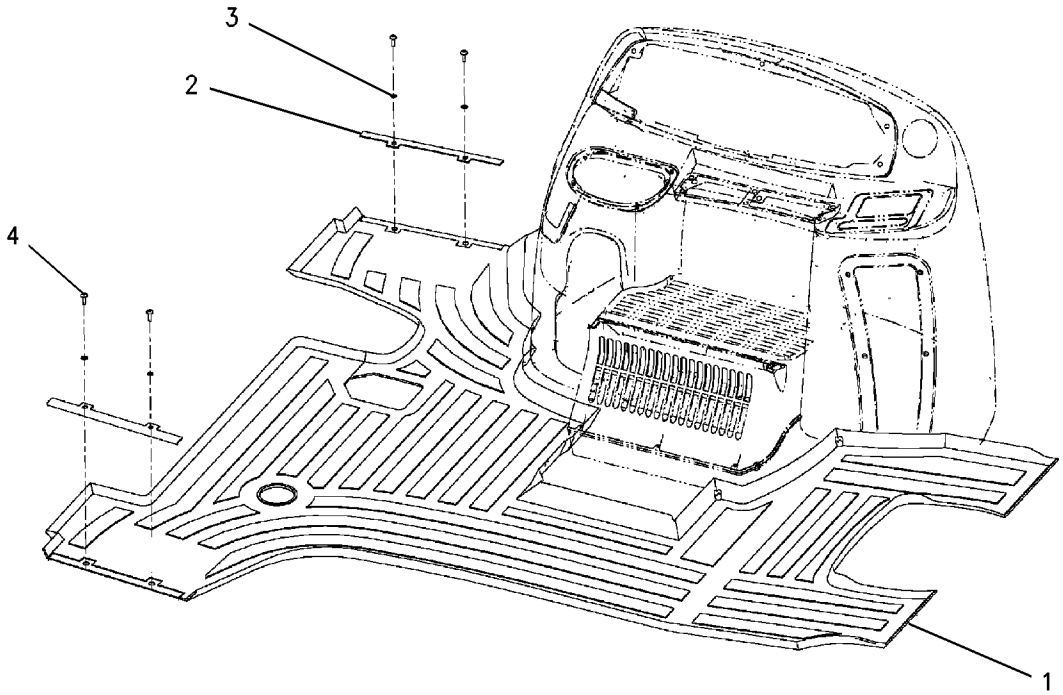


GRAPHIC #1 **<END>** g00727717

# OPERATOR STATION

## *180-5765* FLOOR MAT GP

**S/N: BXC1-UP; DSX1-UP**
**MECHANICAL CONTROLS, CANOPY**
**PART OF 214-7006 CAB AR, 214-7004 CANOPY AR**
**AN ATTACHMENT**

**SMCS-7265** **i01378923**

| NOTE | REF NO | GRAPHIC REF | PART NUMBER | QTY | PART NAME 1 2 3 4 5 6 (PRODUCT LEVEL) | SEE PAGE |
|---|---|---|---|---|---|---|
| | 1 | 1 | **180-5754** | 2 | PLATE | |
| | 2 | 1 | **180-5755** | 1 | FLOOR MAT | |
| | 3 | 1 | **1H-3244** | 4 | LOCKWASHER | |
| M | 4 | 1 | **9X-2045** | 4 | SCREW-TRUSS HEAD (M6X1X20MM) | |

M-METRIC PART

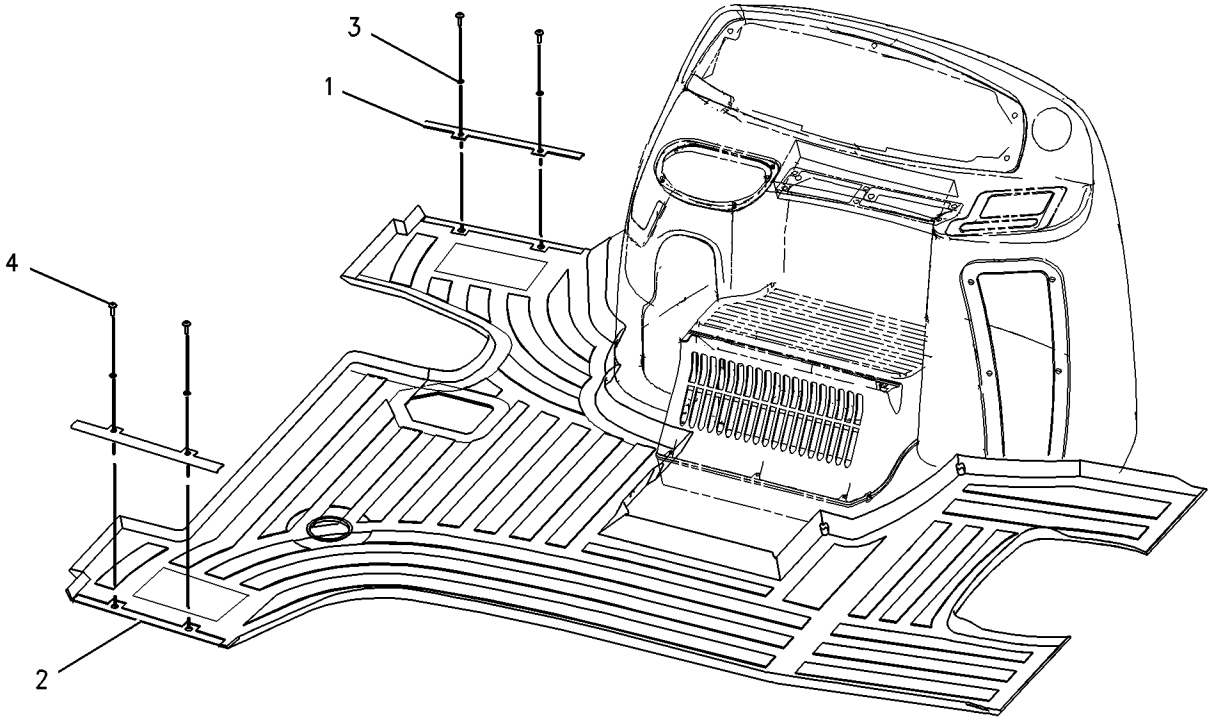


GRAPHIC #1 **<END>** g00728702

# OPERATOR STATION

## *164-1030* HEATER & MTG GP-CAB

**S/N: BXC1-UP; DSX1-UP**
**PART OF 214-7006 CAB AR, 214-7008 CAB AR-ENCLOSED ROPS**
**AN ATTACHMENT**

**SMCS-7304** **i01983571**

| NOTE | REF NO | GRAPHIC REF | PART NUMBER | QTY | PART NAME 1 2 3 4 5 6 (PRODUCT LEVEL) | SEE PAGE |
|---|---|---|---|---|---|---|
| | 1 | 1 | **6L-4725** | 2 | CLAMP-HOSE | |
| | 2 | 1 | **8Y-5737** | 1 | CLAMP | |
| | 3 | 1 | **9M-7959** | 1 | CLAMP (HOSE) | |
| | 4 | 1 | **9R-9901** | 5 | FASTENER (CLIP) | |
| | 5 | 1 | **110-6109** | 1 | KNOB-CONTROL | |
| | 6 | 1 | **130-4832** | 2 | SCREW (8-18X.39 IN) | |
| | 7 | 1 | **164-1037** | 1 | DUCT | |
| | 8 | 1 | **164-1196** | 1 | CABLE AS | |
| | | 1 | **143-8874** | 1 | BOOT | |
| Y | 9 | 1 | **170-0076** | 1 | HEATER GP-CAB | 743 |
| | 10 | 1 | **184-6560** | 1 | BRACKET | |
| | 11 | 1 | **184-6561** | 1 | HOSE-AIR | |
| | 12 | 1 | **184-6564** | 1 | GASKET | |
| | 13 | 1 | **184-6567** | 1 | GASKET | |
| | 14 | 1 | **184-6572** | 1 | INSULATION | |
| | 15 | 1 | **184-6573** | 1 | INSULATION | |
| | 16 | 1 | **184-6574** | 1 | INSULATION | |
| Y | 17 | 1 | *184-6575* | 1 | DUCT GP-AIR | 738 |
| | 18 | 1 | **190-5132** | 1 | FILM-CONTROL (AIR CONDITIONER) | |
| | 19 | 1 | **194-5622** | 1 | VALVE AS (WATER) | |
| | 19A | 1 | **6V-6717** | 1 | SCREW-WASHER HEAD (8-32X.375 IN) | |
| | | 1 | **124-0312** | 2 | SCREW-PAN HEAD (8-16X.32 IN) | |
| | 20 | 1 | **206-7512** | 1 | COVER | |
| | 21 | 1 | **206-7513** | 2 | BRACKET | |
| | 22 | 1 | **206-7514** | 1 | FILTER | |
| E | 23 | 1 | **221-2420** | 1 | HOSE-AIR | |
| | 24 | 1 | **2H-3920** | 1 | LOCKWASHER | |
| M | 25 | 1 | **9X-2042** | 2 | SCREW-TRUSS HEAD (M6X1X12MM) | |
| M | 26 | 1 | **9X-2044** | 2 | SCREW-TRUSS HEAD (M6X1X16MM) | |
| M | 27 | 1 | **9X-2045** | 2 | SCREW-TRUSS HEAD (M6X1X20MM) | |
| E | 28 | 1 | **6V-6813** | | HOSE (40CM) | |

E-ORDER BY THE CENTIMETER
M-METRIC PART
Y-SEPARATE ILLUSTRATION

*164-1030* **HEATER & MTG GP-CAB** *(contd.)* **i01983571**

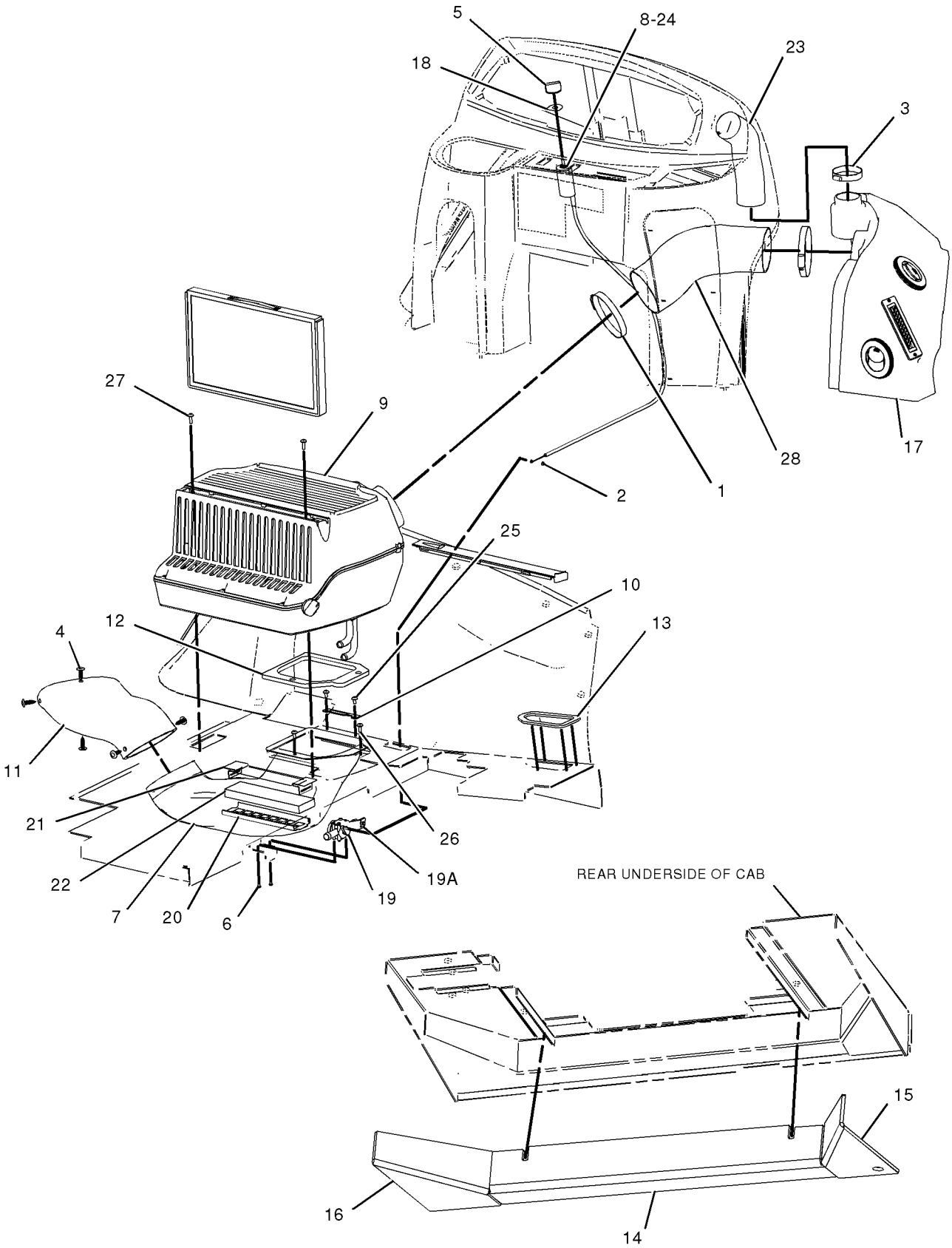


GRAPHIC #1 **<END>** g01028046

# OPERATOR STATION

## 170-0076 HEATER GP-CAB

**S/N: BXC1-UP; DSX1-UP**
**PART OF 164-1030 HEATER & MTG GP-CAB**
**AN ATTACHMENT**

**SMCS-7304** **i01871148**

| NOTE | REF NO | GRAPHIC REF | PART NUMBER | QTY | PART NAME 1 2 3 4 5 6 (PRODUCT LEVEL) | SEE PAGE |
|---|---|---|---|---|---|---|
| | 1 | 1 | **164-6613** | 1 | COIL AS-HEATER | |
| | | 1 | **201-1637** | 1 | GASKET | |
| | | 1 | **201-1638** | 1 | GASKET | |
| | 2 | 1 | **168-2313** | 1 | FAN AS | |
| | | 1 | **7T-0093** | 2 | PIN-CONNECTOR | |
| | 3 | 1 | **170-7269** | 1 | COVER | |
| | 4 | 1 | **170-7270** | 1 | CASE AS | |
| | | 1 | **6C-3680** | 4 | RIVET-POP | |
| M | | 1 | **129-3178** | 4 | LOCKNUT (M6X1 THD) | |
| | | 1 | **188-2711** | 1 | GUARD AS | |
| | 5 | 1 | **170-7271** | 1 | COVER | |
| | 6 | 1 | **170-7272** | 1 | FILTER-AIR | |
| | 7 | 1 | **170-7281** | 1 | GASKET | |
| | 8 | 1 | **170-7282** | 1 | GASKET | |
| | 9 | 1 | **185-4015** | 4 | CLIP | |
| | 10 | 1 | **188-2704** | 1 | GASKET | |
| | 11 | 1 | **188-2706** | 4 | GASKET | |
| | 12 | 1 | **188-2708** | 1 | GASKET | |
| | 13 | 1 | **188-2715** | 1 | BRACKET | |
| | 14 | 1 | **199-3729** | 1 | DOOR AS | |
| | | 1 | **191-6033** | 1 | CONTROL AS | |
| | | 1 | **191-6035** | 1 | RETAINER | |
| | | 1 | **201-1634** | 1 | LINK | |
| | 15 | 1 | **204-9921** | 1 | RESISTOR AS | |
| | 16 | 1 | **206-7398** | 1 | KNOB-CONTROL | |
| | 17 | 1 | **213-9270** | 1 | FILM | |
| | 18 | 1 | **2S-3745** | 4 | SCREW-TAPPING (10-16X.5 IN) | |
| | 19 | 1 | **5P-7921** | 3 | SCREW-WASHER HEAD (1/4-20X3/4 IN) | |
| | 20 | 1 | **6V-6717** | 2 | SCREW-WASHER HEAD (8-32X.375 IN) | |
| M | 21 | 1 | **6V-7357** | 4 | BOLT (M6X1.0X25MM) | |
| | 22 | 1 | **8T-4205** | 4 | WASHER-HARD (7.2X14.5X2MM THK) | |

M-METRIC PART

**170-0076 HEATER GP-CAB** *(contd.)* **i01871148**

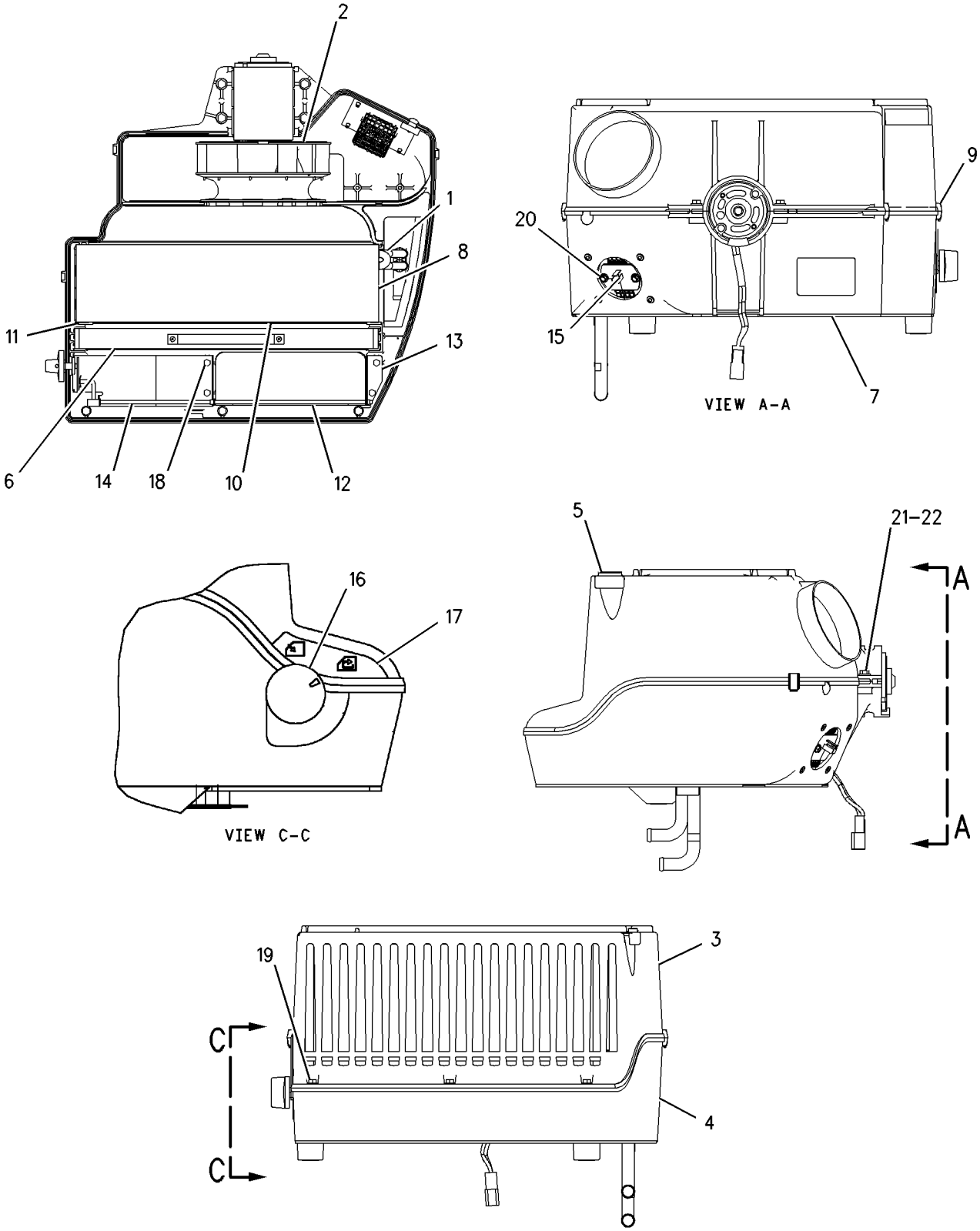


GRAPHIC #1 **<END>** g00952802

# OPERATOR STATION

## *193-2342* HORN GP-ELECTRIC—REAR

**S/N: BXC1-UP; DSX1-UP**
**PART OF 190-2802 CONVERSION AR-CERTIFICATION**
**AN ATTACHMENT**

**SMCS-7402** **i01674513**

| NOTE | REF NO | GRAPHIC REF | PART NUMBER | QTY | PART NAME 1 2 3 4 5 6 (PRODUCT LEVEL) | SEE PAGE |
|---|---|---|---|---|---|---|
| B | 1 | 1 | **3S-2093** | 1 | STRAP-CABLE | |
| | 2 | 1 | **164-9425** | 1 | HORN AS | |
| | 3 | 1 | **169-0587** | 1 | SWITCH AS (HORN) | |
| | | 1 | **111-7899** | 1 | GASKET | |
| | 4 | 1 | **096-4415** | 1 | LOCKWASHER | |
| B | 5 | 1 | **4P-8134** | 1 | CLIP | |
| M | 6 | 1 | **8T-4133** | 1 | NUT (M10X1.5 THD) | |
| M | 7 | 1 | **8T-4195** | 1 | BOLT (M10X1.5X30MM) | |

B-USE AS REQUIRED
M-METRIC PART

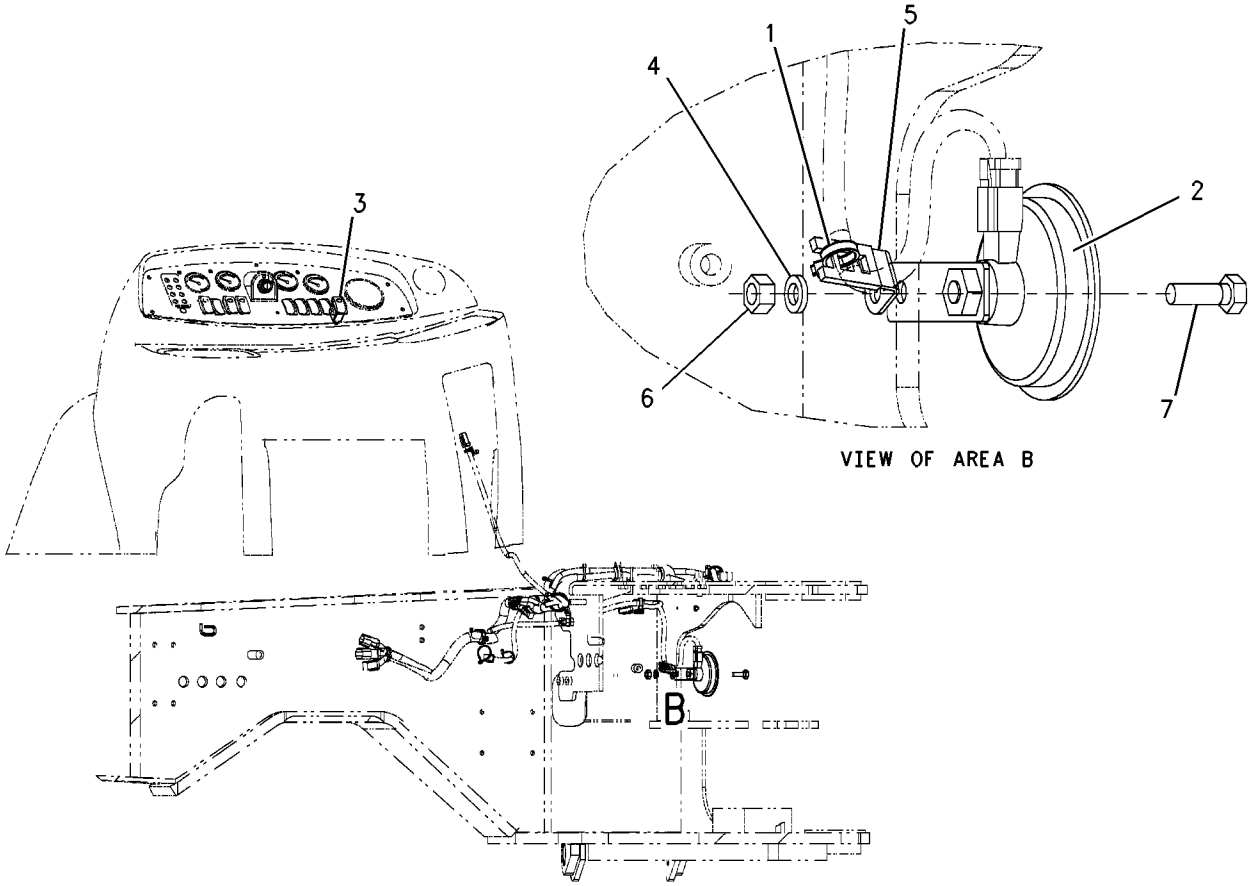


GRAPHIC #1 **<END>** g00823261

# OPERATOR STATION

## *183-3887* LEVER GP-GOVERNOR CONTROL

**S/N: BXC1-UP; DSX1-UP**

**PART OF 234-8892 CONTROL GP-GOV & ACCELERATOR**

**SMCS-1265** **i01483331**

| NOTE | REF NO | GRAPHIC REF | PART NUMBER | QTY | PART NAME 1 2 3 4 5 6 (PRODUCT LEVEL) | SEE PAGE |
|---|---|---|---|---|---|---|
| | 1 | 1 | **8T-4742** | 1 | END-YOKE ROD | |
| | 2 | 1 | **8T-4744** | 1 | PIN AS-SPRING | |
| | 3 | 1 | **164-1079** | 1 | CABLE AS | |
| | 4 | 1 | **164-1083** | 1 | LEVER AS | |
| M | 5 | 1 | **8T-4971** | 1 | BOLT (M6X1X30MM) | |
| M | 6 | 1 | **129-3178** | 1 | LOCKNUT (M6X1 THD) | |

M-METRIC PART

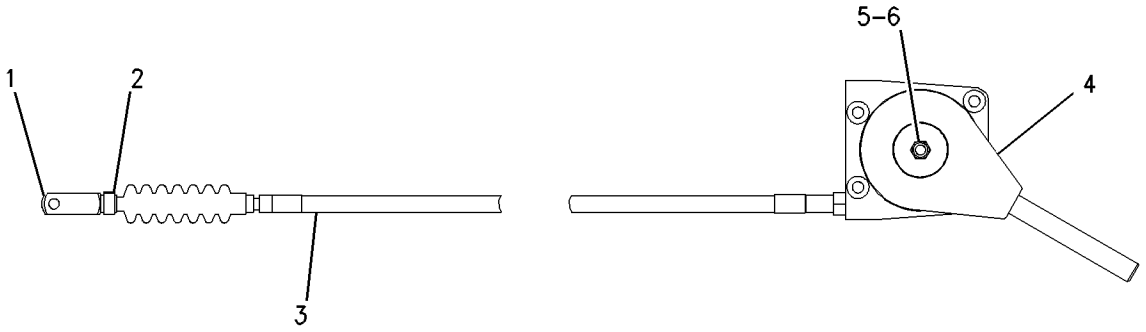


GRAPHIC #1 **<END>** g00743371

# OPERATOR STATION

## *236-6657* LINES GP-HEATER

**S/N: BXC1-UP; DSX1-UP**
**PART OF 214-7006 CAB AR, 214-7008 CAB AR-ENCLOSED ROPS**
**AN ATTACHMENT**

**SMCS-7304** **i02003683**

| NOTE | REF NO | GRAPHIC REF | PART NUMBER | QTY | PART NAME 1 2 3 4 5 6 (PRODUCT LEVEL) | SEE PAGE |
|---|---|---|---|---|---|---|
| | 1 | 1 | **5D-1026** | 8 | CLAMP-HOSE | |
| | 2 | 1 | **9M-8406** | 1 | CLIP | |
| | 3 | 1 | **6P-8855** | 1 | SPACER (.56X.625X3MM THK) | |
| | 4 | 1 | **9M-4814** | 1 | CONNECTOR-HOSE | |
| | 5 | 1 | **3E-4321** | 5 | CLIP | |
| | 6 | 1 | **8T-4121** | 6 | WASHER-HARD (11X21X2.5MM THK) | |
| M | 7 | 1 | **8T-4137** | 5 | BOLT (M10X1.5X20MM) | |
| M | 8 | 1 | **8T-4189** | 1 | BOLT (M8X1.25X20MM) | |
| | 9 | 1 | **5P-0767** | | HOSE (275CM) | |
| | 10 | 1 | **5P-0767** | | HOSE (295CM) | |
| | 11 | 1 | **5P-0767** | 2 | HOSE (42.5CM) | |
| | 12 | 1 | **134-3856** | 1 | ELBOW | |

M-METRIC PART

*236-6657* **LINES GP-HEATER** *(contd.)* **i02003683**

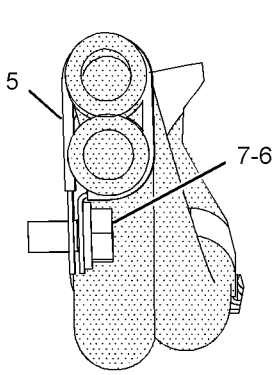


SECTION E-E

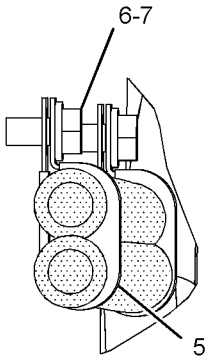


SECTION C-C

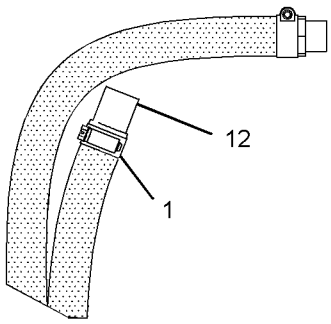


VIEW G-G

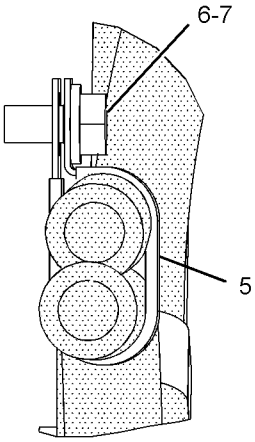


SECTION D-D

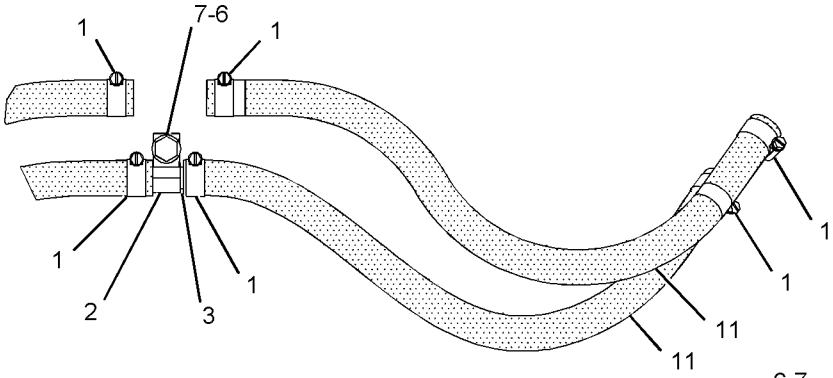


VIEW B-B

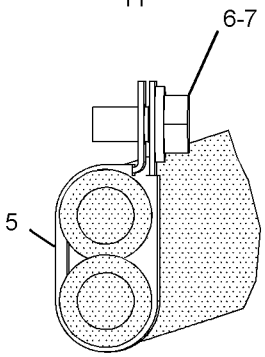


SECTION A-A

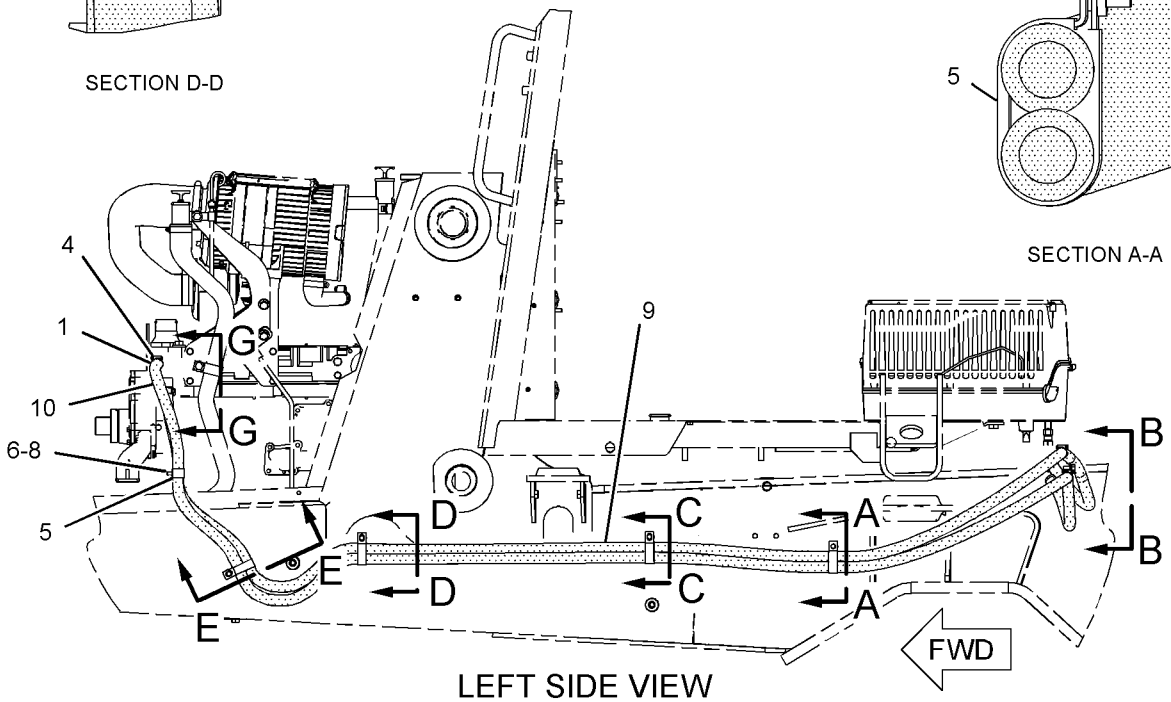


LEFT SIDE VIEW

GRAPHIC #1 **<END>** g01036311

# OPERATOR STATION

## *234-2617* LINES GP-HEATER & AIR COND

**S/N: BXC1-UP; DSX1-UP**
**PART OF 214-7007 CAB AR, 214-7009 CAB AR-ENCLOSED ROPS**
**AN ATTACHMENT**

**SMCS-1380, 1808, 7304** **i01986743**

| NOTE | REF NO | GRAPHIC REF | PART NUMBER | QTY | PART NAME 1 2 3 4 5 6 (PRODUCT LEVEL) | SEE PAGE |
|---|---|---|---|---|---|---|
| | 1 | 1 | **3S-2093** | 3 | STRAP-CABLE | |
| | 2 | 1 | **5D-1026** | 8 | CLAMP-HOSE | |
| E | 3 | 1 | **5P-0767** | | HOSE (295CM) | |
| | 4 | 1 | **6P-8855** | 1 | SPACER (.56X.625X3MM THK) | |
| G | 5 | 1 | **160-2245** | | SLEEVE-ABRASION (11IN) | |
| | 6 | 1 | **9M-4814** | 1 | CONNECTOR-HOSE | |
| | 7 | 1 | **105-9411** | 1 | SUPPORT | |
| I | 8 | 1 | **125-3416** | 1 | HOSE AS | |
| | 9 | 1 | **152-8417** | 1 | STRAP | |
| I | 10 | 1 | **164-1040** | 1 | HOSE AS | |
| I | 11 | 1 | **164-1041** | 1 | HOSE AS | |
| | 12 | 1 | **184-6565** | 1 | BRACKET AS | |
| M | | 1 | **8T-3490** | 3 | NUT-WELD (M10X1.5 THD) | |
| | 13 | 1 | **176-3900** | 1 | ACCUMULATOR GP-REFRIGERANT | |
| | 14 | 1 | **199-6243** | 1 | PLATE (INSTRUCTION) | |
| | 15 | 1 | **234-2484** | 1 | HOSE AS | |
| | 16 | 1 | **234-2485** | 1 | HOSE AS | |
| | 17 | 1 | **3E-4321** | 5 | CLIP | |
| | 18 | 1 | **5P-7854** | 1 | CLIP | |
| | 19 | 1 | **6D-4246** | 1 | CLIP | |
| | 20 | 1 | **7F-6998** | 1 | LOCKWASHER | |
| | 21 | 1 | **8T-4121** | 18 | WASHER-HARD (11X21X2.5MM THK) | |
| M | 22 | 1 | **8T-4133** | 1 | NUT (M10X1.5 THD) | |
| M | 23 | 1 | **8T-4136** | 5 | BOLT (M10X1.5X25MM) | |
| M | 24 | 1 | **8T-4137** | 8 | BOLT (M10X1.5X20MM) | |
| M | 25 | 1 | **8T-4189** | 1 | BOLT (M8X1.25X20MM) | |
| M | 26 | 1 | **8T-4195** | 3 | BOLT (M10X1.5X30MM) | |
| | 27 | 1 | **9M-4972** | 5 | CLIP | |
| | 28 | 1 | **9M-8406** | 6 | CLIP | |
| | 29 | 1 | **9X-7380** | 2 | SEAL-O-RING | |
| | 30 | 1 | **9X-7381** | 2 | SEAL-O-RING | |
| | 31 | 1 | **9X-7382** | 1 | SEAL-O-RING | |
| | 32 | 1 | **9X-7383** | 2 | SEAL-O-RING | |
| D | 33 | 1 | **5P-5924** | | SEAL (.03M) | |
| E | 34 | 1 | **5P-0767** | | HOSE (275CM) | |
| E | 35 | 1 | **5P-0767** | 2 | HOSE (42.5CM EA) | |

D-ORDER BY THE METER
E-ORDER BY THE CENTIMETER
G-ORDER BY THE INCH
I-REFER TO HYDRAULIC INFORMATION SYSTEM
M-METRIC PART

## *234-2617* LINES GP-HEATER & AIR COND *(contd.)* i01986743

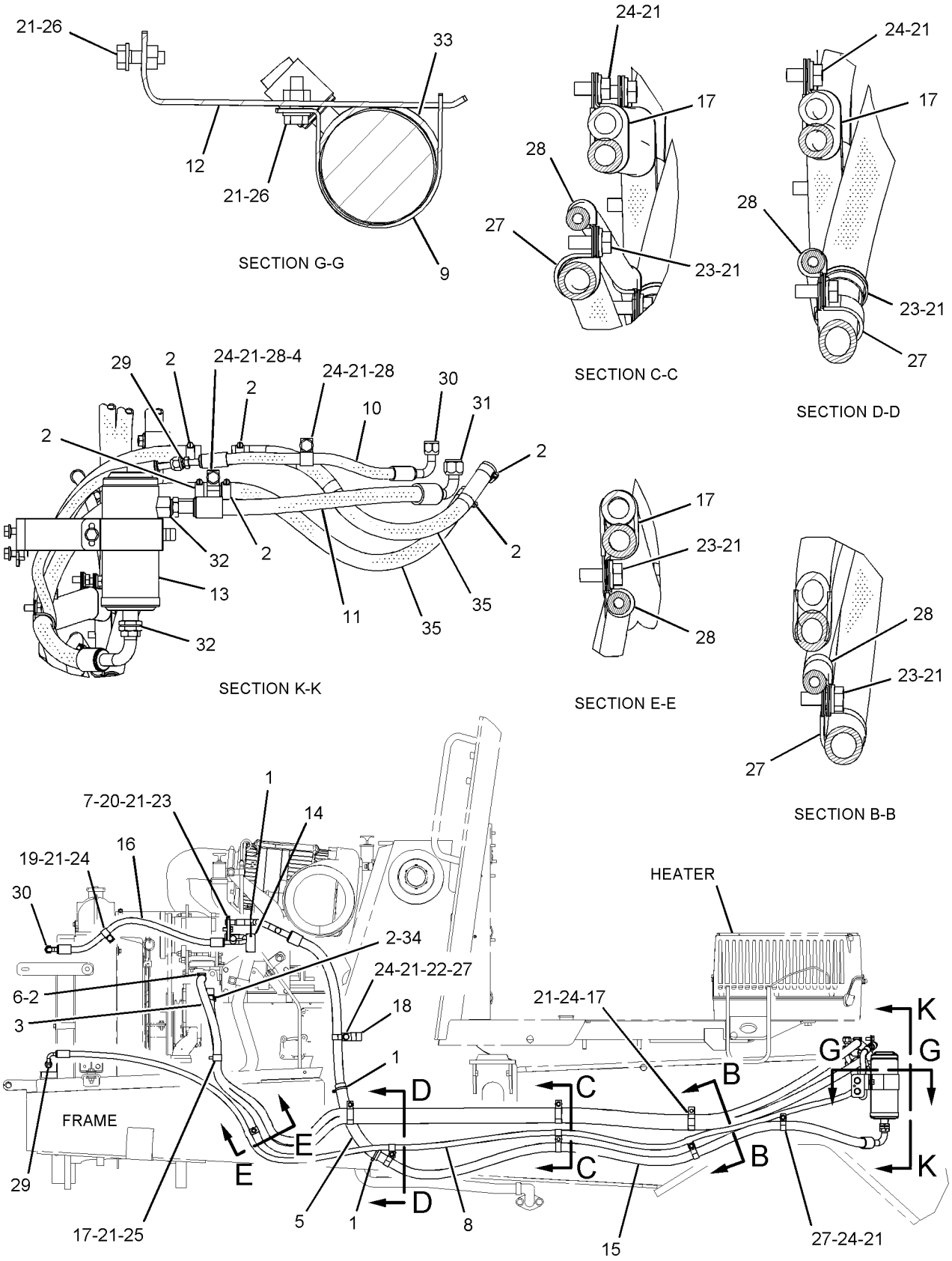


RIGHT SIDE VIEW

GRAPHIC #1 **<END>** g01034184

# OPERATOR STATION

## *122-2054* MIRROR GP-REAR VIEW

**S/N: BXC1-UP; DSX1-UP**
**AN ATTACHMENT**

**SMCS-7319** **i01345327**

| NOTE | REF NO | GRAPHIC REF | PART NUMBER | QTY | PART NAME 1 2 3 4 5 6 (PRODUCT LEVEL) | SEE PAGE |
|---|---|---|---|---|---|---|
| | 1 | 1 | **122-2051** | 2 | BRACKET | |
| | 2 | 1 | **122-2053** | 1 | MIRROR AS (LH) | |
| | 3 | 1 | **122-2052** | 1 | MIRROR AS (RH) | |
| M | 4 | 1 | **8T-4137** | 4 | BOLT (M10X1.50X20MM) | |
| | 5 | 1 | **8T-4121** | 4 | WASHER-HARD (2.5MM THK) | |

M-METRIC PART

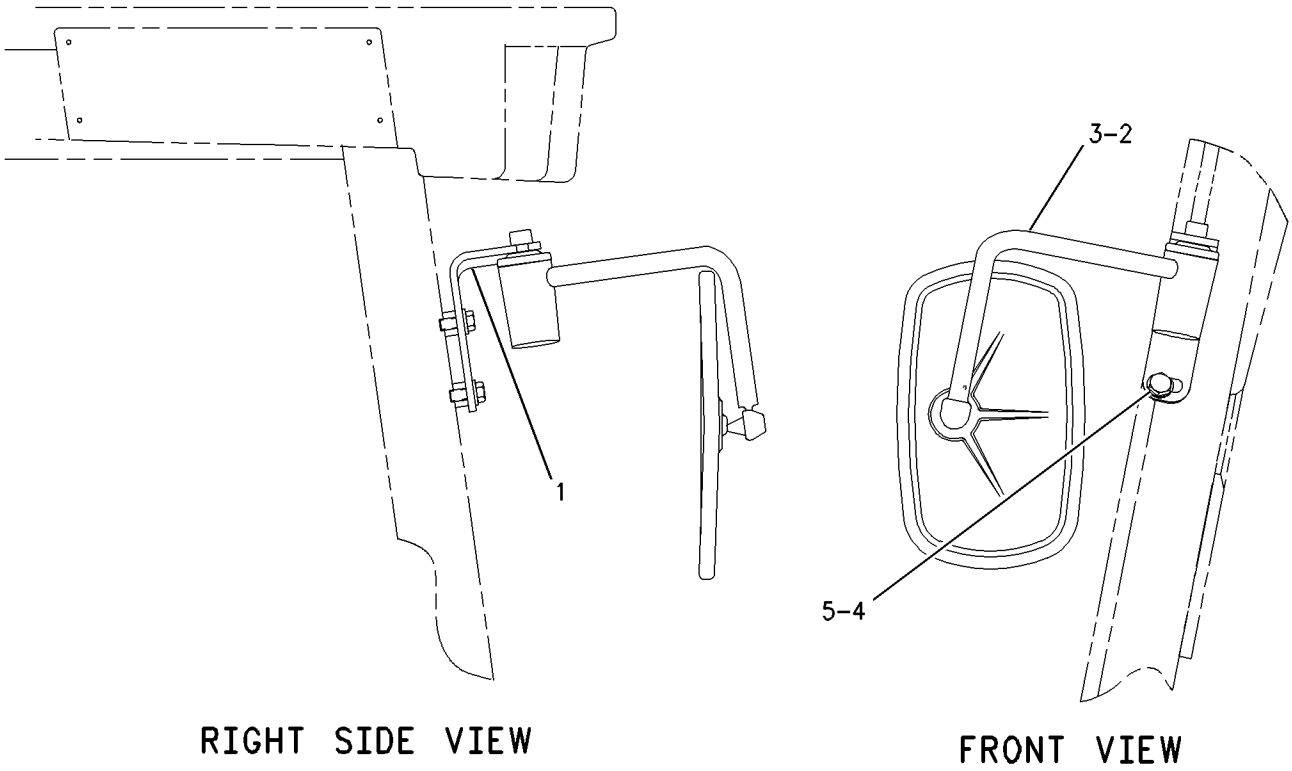


GRAPHIC #1 **<END>** g00710492

# OPERATOR STATION

## *164-1055* MIRROR GP-REAR VIEW

**S/N: BXC1-UP; DSX1-UP**

**AN ATTACHMENT**

**SMCS-7319** **i01969157**

| NOTE | REF NO | GRAPHIC REF | PART NUMBER | QTY | PART NAME 1 2 3 4 5 6 (PRODUCT LEVEL) | SEE PAGE |
|---|---|---|---|---|---|---|
| | 1 | 1 | **123-6620** | 2 | MIRROR AS | |
| | 2 | 1 | **159-7104** | 2 | BRACKET AS | |
| | 3 | 1 | **159-7105** | 1 | BRACKET & MOUNTING AS (LH) | |
| | 4 | 1 | **159-7106** | 1 | BRACKET & MOUNTING AS (RH) | |
| | 5 | 1 | **8T-4121** | 4 | WASHER-HARD (11X21X2.5MM THK) | |
| M | 6 | 1 | **8T-4137** | 4 | BOLT (M10X1.5X20MM) | |
| M | 7 | 1 | **8T-4189** | 4 | BOLT (M8X1.25X20MM) | |
| | 8 | 1 | **8T-4224** | 4 | WASHER-HARD (8.8X16X2MM THK) | |

M-METRIC PART

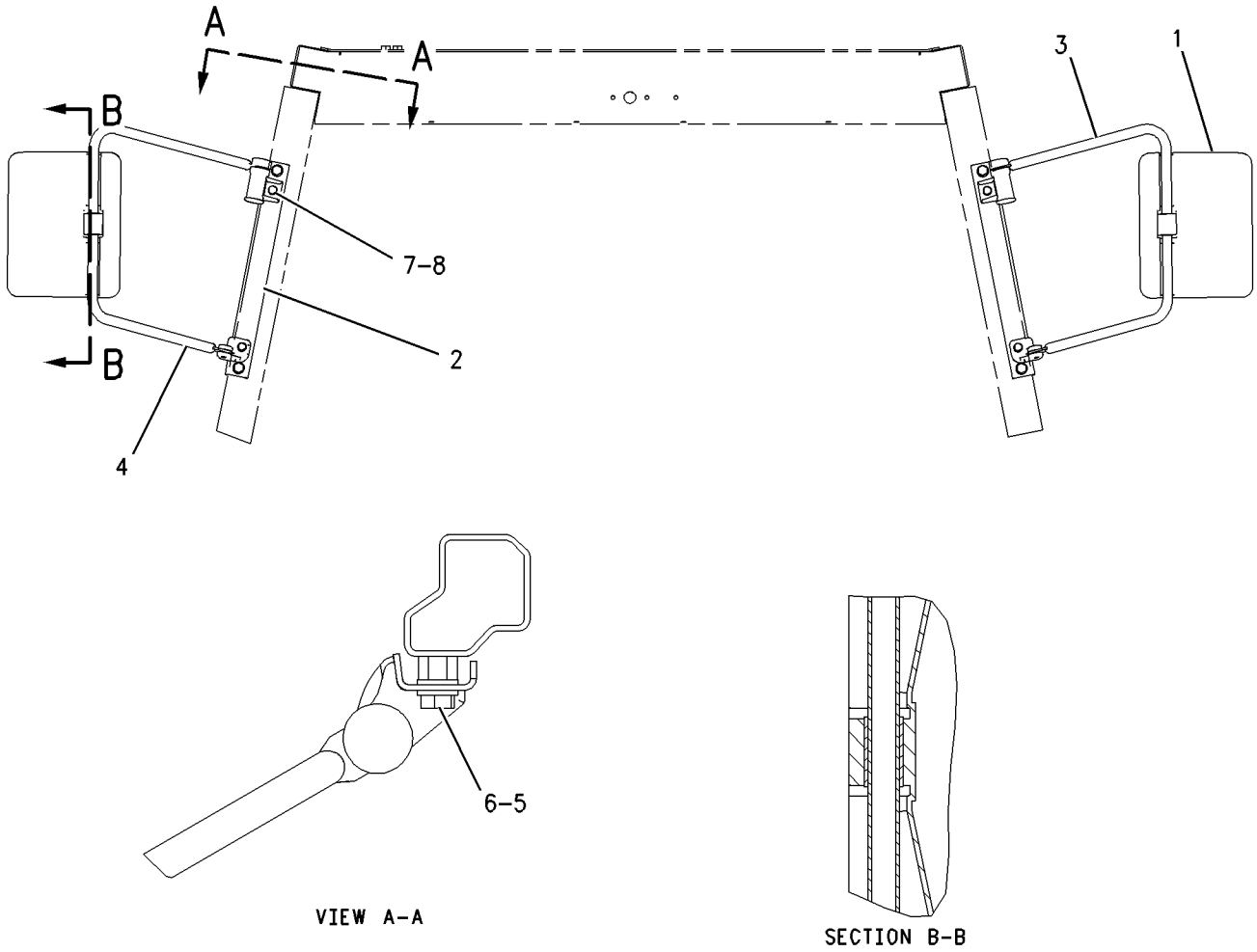


GRAPHIC #1 **<END>** g00860365

# OPERATOR STATION

## *144-9931* MODULE GP-WARNING INDICATOR

**S/N: BXC1-UP; DSX1-UP**
**WITHOUT ALARM**
**PART OF 238-1165 WIRING GP-CONSOLE**

**SMCS-7407, 7431** **i01946519**

| NOTE | REF NO | GRAPHIC REF | PART NUMBER | QTY | PART NAME 1 2 3 4 5 6 (PRODUCT LEVEL) | SEE PAGE |
|---|---|---|---|---|---|---|
| | 1 | 1 | **102-8806** | 1 | KIT-RECEPTACLE (8 PIN) | |
| | 2 | 1 | **144-9934** | 1 | GASKET | |
| | 3 | 1 | **189-3610** | 1 | LAMP (12 VOLT) (MINIATURE) | |

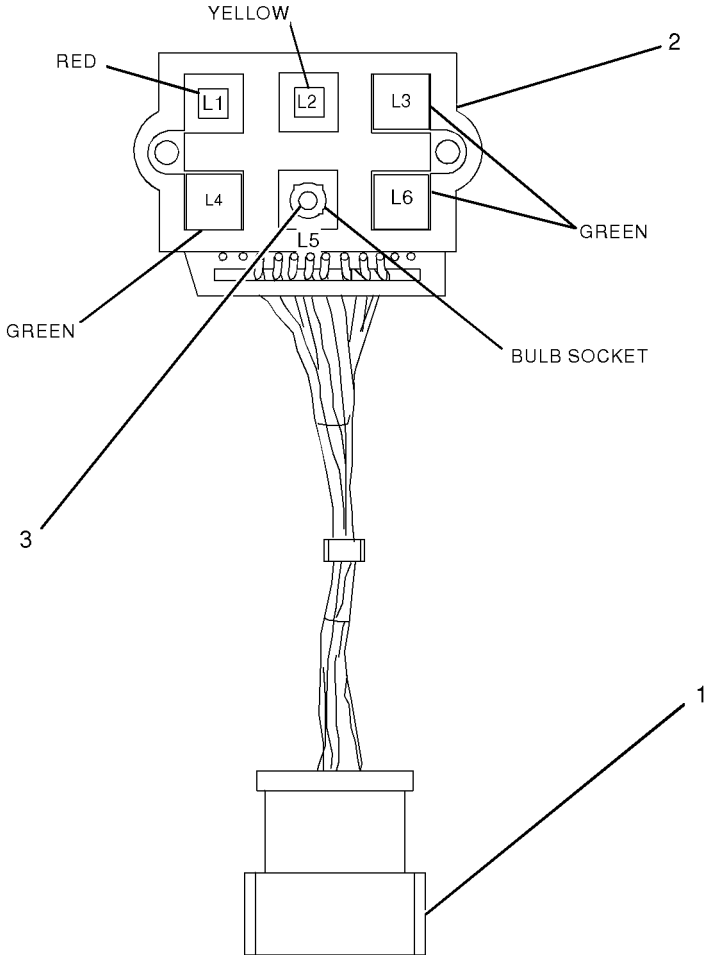


GRAPHIC #1 **<END>** g01013281

# OPERATOR STATION

## *223-6539* MODULE GP-WARNING INDICATOR

**S/N: BXC1-UP; DSX1-UP**
**PART OF 238-1166 WIRING GP-CONSOLE**
**AN ATTACHMENT**

**SMCS-7407, 7431** **i01967501**

| NOTE | REF NO | GRAPHIC REF | PART NUMBER | QTY | PART NAME 1 2 3 4 5 6 (PRODUCT LEVEL) | SEE PAGE |
|---|---|---|---|---|---|---|
| | 1 | 1 | **102-8801** | 1 | KIT-RECEPTACLE (12 PIN) | |
| | 2 | 1 | **232-4706** | 1 | GASKET | |
| | 3 | 1 | **3E-5180** | 1 | WEDGE-RECEPTACLE LOCK (12 PIN) | |
| | 4 | 1 | **186-3735** | 9 | PIN-CONNECTOR | |
| | 5 | 1 | **8T-8737** | 1 | PLUG-SEAL | |

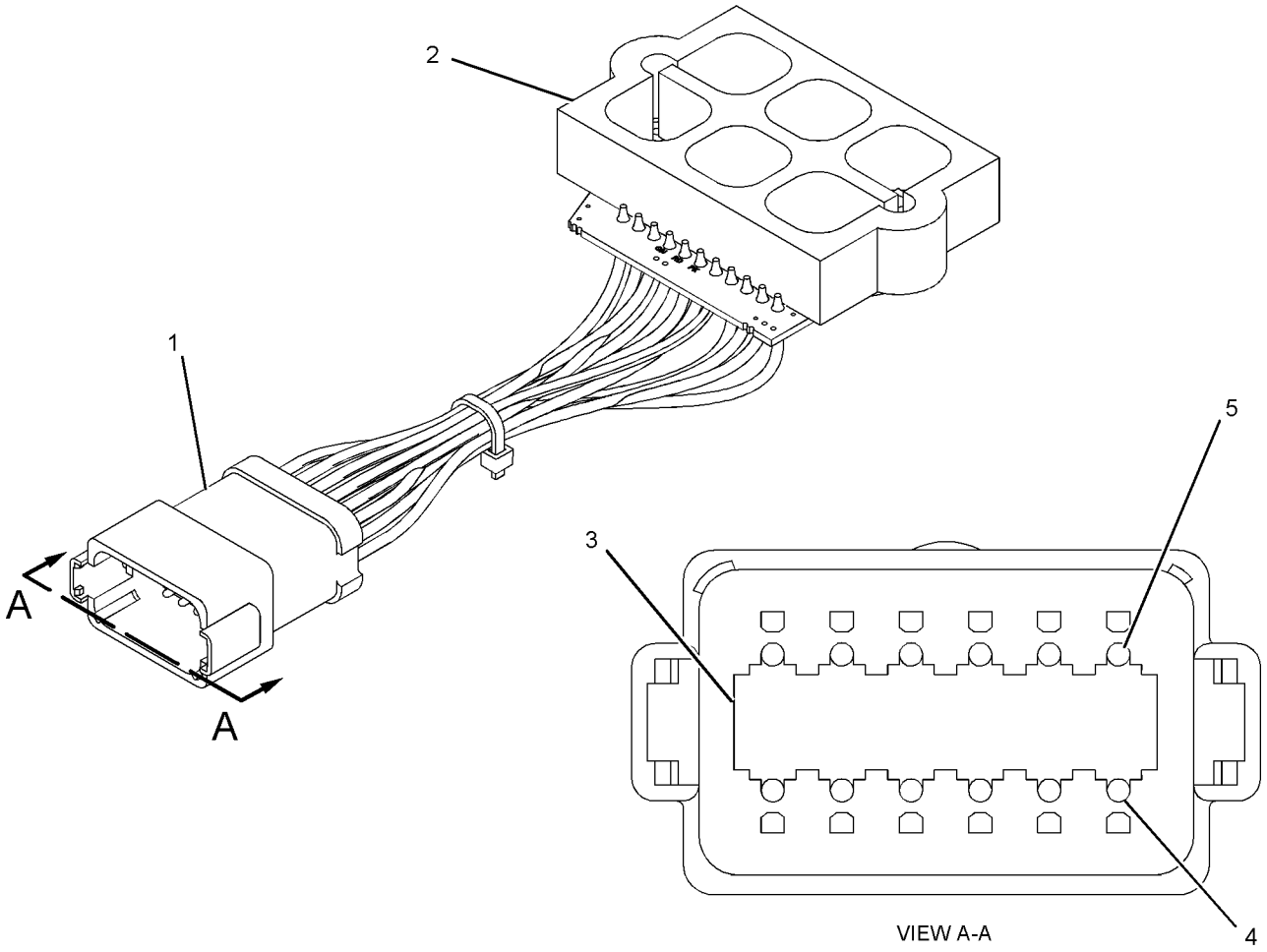


GRAPHIC #1 **<END>** g01022158

# OPERATOR STATION

## 186-2589 MOTOR GP-WINDOW WIPER

**S/N: BXC1-UP; DSX1-UP**
**PART OF 174-2024 WIPER GP-WINDOW**
**AN ATTACHMENT**

**SMCS-7305** **i01373564**

| NOTE | REF NO | GRAPHIC REF | PART NUMBER | QTY | PART NAME 1 2 3 4 5 6 (PRODUCT LEVEL) | SEE PAGE |
|---|---|---|---|---|---|---|
| M | 1 | 1 | **5C-7261** | 1 | NUT (M8X1.25 THD) | |
| | 2 | 1 | **3F-9556** | 1 | LOCKWASHER (8.4MM ID) | |
| | 3 | 1 | **102-8805** | 1 | KIT-RECEPTACLE (6 PIN) | |
| | 4 | 1 | **9G-3695** | 1 | PLUG-SEALING (GROMMET) | |
| | 5 | 1 | **186-3735** | 5 | PIN-CONNECTOR | |

M-METRIC PART

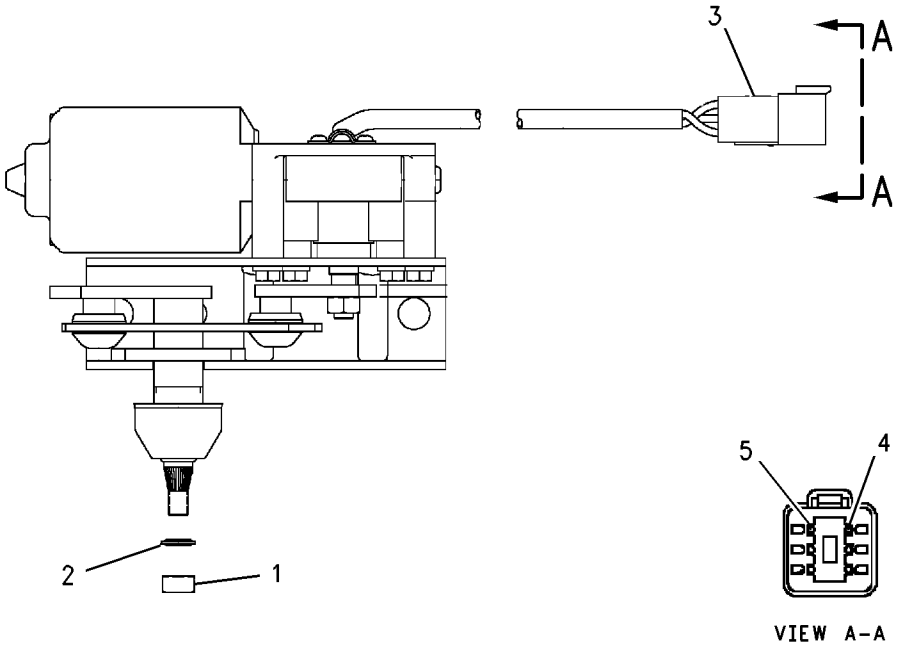


GRAPHIC #1 **<END>** g00726408

# OPERATOR STATION

## *184-7898* MOUNTING GP-INSTRUMENT PANEL—FRONT CONSOLE

**S/N: BXC1-UP; DSX1-UP**
**TWO WHEEL STEER**
**PART OF 184-7970 POWER TRAIN AR**

**SMCS-7451** **i01439939**

| NOTE | REF NO | GRAPHIC REF | PART NUMBER | QTY | PART NAME 1 2 3 4 5 6 (PRODUCT LEVEL) | SEE PAGE |
|---|---|---|---|---|---|---|
| | 1 | 1 | **167-8278** | 2 | PLATE | |
| | 2 | 1 | **167-8279** | 1 | PANEL AS | |
| M | 3 | 1 | **9X-1046** | 14 | SCREW (M4X0.7X18MM) | |

M-METRIC PART

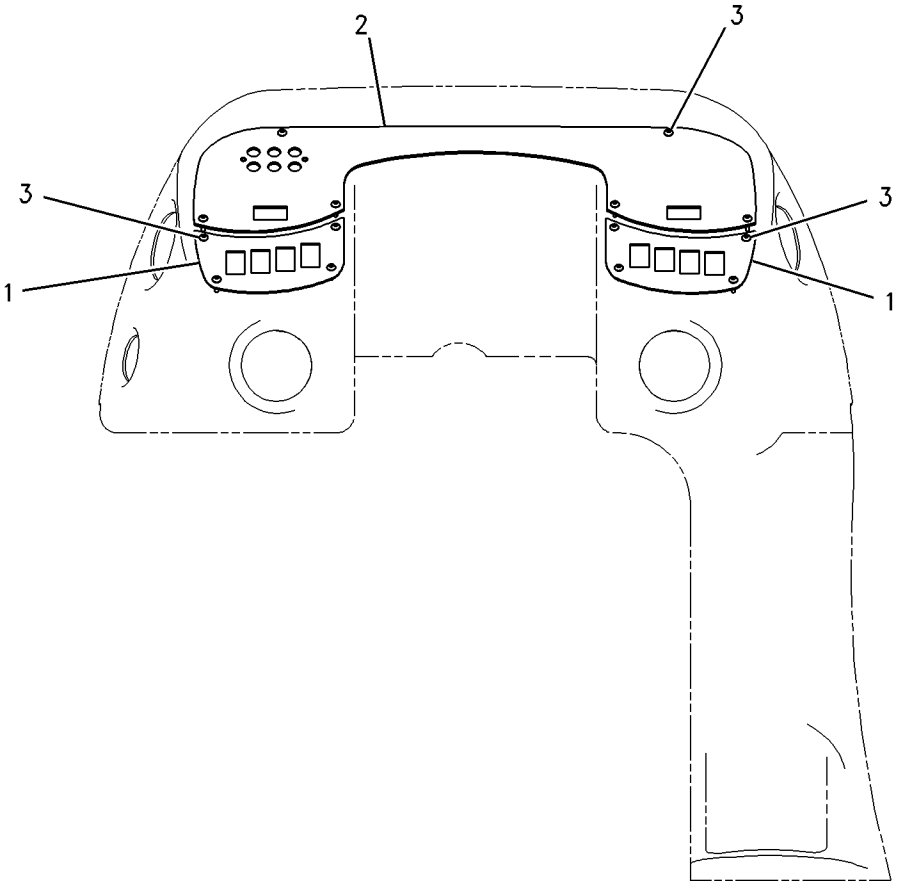


GRAPHIC #1 **<END>** g00754349

# OPERATOR STATION

## *185-3525* MOUNTING GP-INSTRUMENT PANEL—FRONT CONSOLE

**S/N: BXC1-UP; DSX1-UP**

**PART OF 214-7012, 214-7013, 214-7014, 214-7015 POWER TRAIN AR**

**AN ATTACHMENT**

**SMCS-7451** **i01444394**

| NOTE | REF NO | GRAPHIC REF | PART NUMBER | QTY | PART NAME 1 2 3 4 5 6 (PRODUCT LEVEL) | SEE PAGE |
|---|---|---|---|---|---|---|
| | 1 | 1 | **5P-4116** | 4 | WASHER-HARD (8.8X20.5X2MM THK) | |
| M | 2 | 1 | **6V-9189** | 4 | LOCKNUT | |

M-METRIC PART

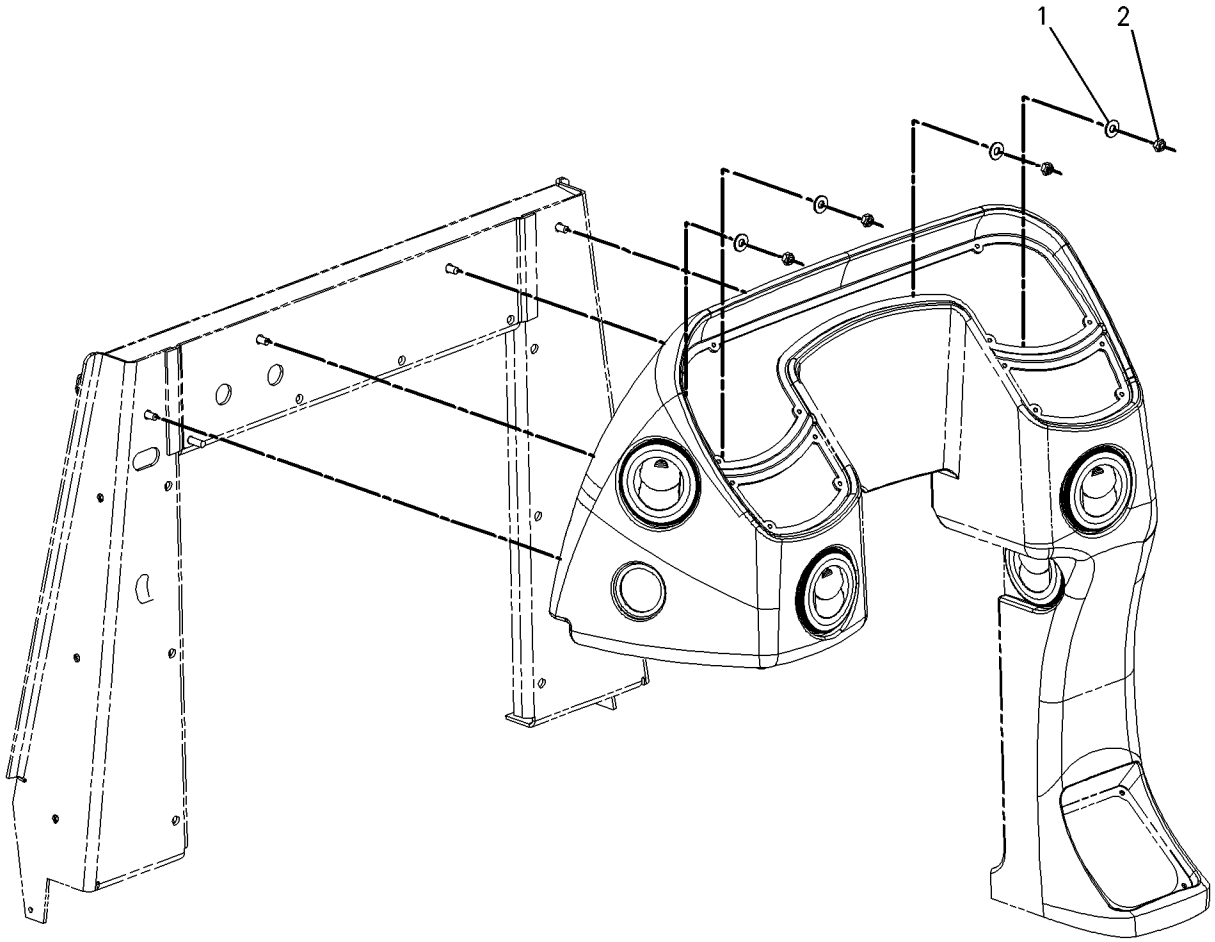


GRAPHIC #1 **<END>** g00756122

# OPERATOR STATION

## *202-5724* MOUNTING GP-INSTRUMENT PANEL—SIDE

**S/N: BXC1-UP; DSX1-UP**
**ROTATING VANDALISM GUARD**
**PART OF 214-7008, 214-7009 CAB AR-ENCLOSED ROPS**
**AN ATTACHMENT**

**SMCS-7451** **i02005668**

| NOTE | REF NO | GRAPHIC REF | PART NUMBER | QTY | PART NAME 1 2 3 4 5 6 (PRODUCT LEVEL) | SEE PAGE |
|---|---|---|---|---|---|---|
| J | 1 | 1 | **5P-9000** | 1 | LOCK AS-CYLINDER | |
| | 2 | 1 | **164-1122** | 1 | BODY | |
| | 3 | 1 | **164-1123** | 1 | BEZEL | |
| | 4 | 1 | **164-1177** | 2 | CAP-END | |
| | 5 | 1 | **168-4609** | 1 | SWITCH AS-START | |
| | | 1 | **7T-6799** | 1 | NUT-MOUNTING (1-32 THD) | |
| | 6 | 1 | **185-9777** | 1 | PLATE | |
| | 7 | 1 | **191-5104** | 4 | MOUNT | |
| | 8 | 1 | **192-7355** | 2 | PLATE | |
| | 9 | 1 | **194-4250** | 2 | PIN | |
| | 10 | 1 | **197-7499** | 2 | BOLT (M4X.7X25MM) | |
| | 11 | 1 | **202-5979** | 1 | HANDLE | |
| | 12 | 1 | **202-6063** | 1 | FILM (START SWITCH) | |
| M | 13 | 1 | **131-3540** | 2 | LOCKNUT (M8X1.25 THD) | |
| | 15 | 1 | **214-9035** | 8 | BOLT (M4X0.7X16MM) | |
| | 16 | 1 | **4B-4863** | 2 | WASHER (4.7X11X1.2MM THK) | |
| M | 17 | 1 | **8T-2659** | 8 | LOCKNUT (M4X6H THD) | |
| | 18 | 1 | **8T-4224** | 4 | WASHER-HARD (8.8X16X2MM THK) | |
| M | 19 | 1 | **8T-4908** | 2 | BOLT (M8X1.25X25MM) | |
| M | 20 | 1 | **9X-2045** | 5 | SCREW-TRUSS HEAD (M6X1X20MM) | |

J-REQUIRES 5P8500 KEY
M-METRIC PART

*202-5724* **MOUNTING GP-INSTRUMENT PANEL** *(contd.)* **i02005668**

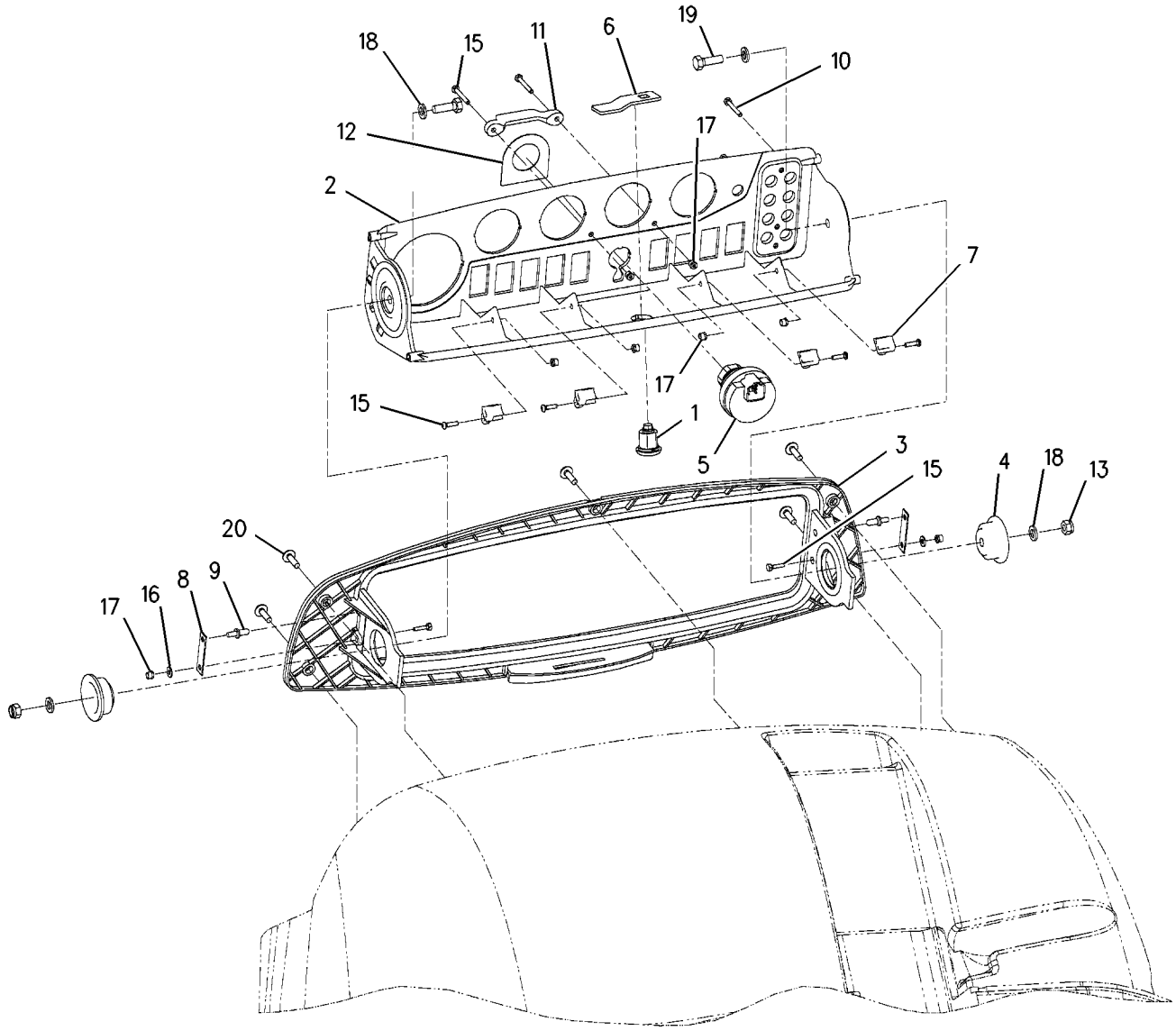


GRAPHIC #1 **<END>** g00864598

# OPERATOR STATION

## *202-5812* PANEL GP-INSTRUMENT—SIDE

**S/N: BXC1-UP; DSX1-UP**
**FLAT GAUGE PANEL**
**AN ATTACHMENT**

**SMCS-1435, 7450, 7451, 7453, 7462, 7463, 7477, 7481** **i01843912**

| NOTE | REF NO | GRAPHIC REF | PART NUMBER | QTY | PART NAME 1 2 3 4 5 6 (PRODUCT LEVEL) | SEE PAGE |
|---|---|---|---|---|---|---|
| J | 1 | 1 | **142-8858** | 1 | SWITCH AS-KEY START | |
| | 2 | 1 | **167-8283** | 1 | PANEL AS-INSTRUMENT | |
| | 3 | 1 | **193-1509** | 1 | WIRE AS | |
| | 4 | 1 | **191-9104** | 1 | FILM (START SWITCH) | |
| M | 5 | 1 | **9X-2045** | 10 | SCREW-TRUSS HEAD (M6X1X20MM) | |

J-REQUIRES 5P8500 KEY
M-METRIC PART

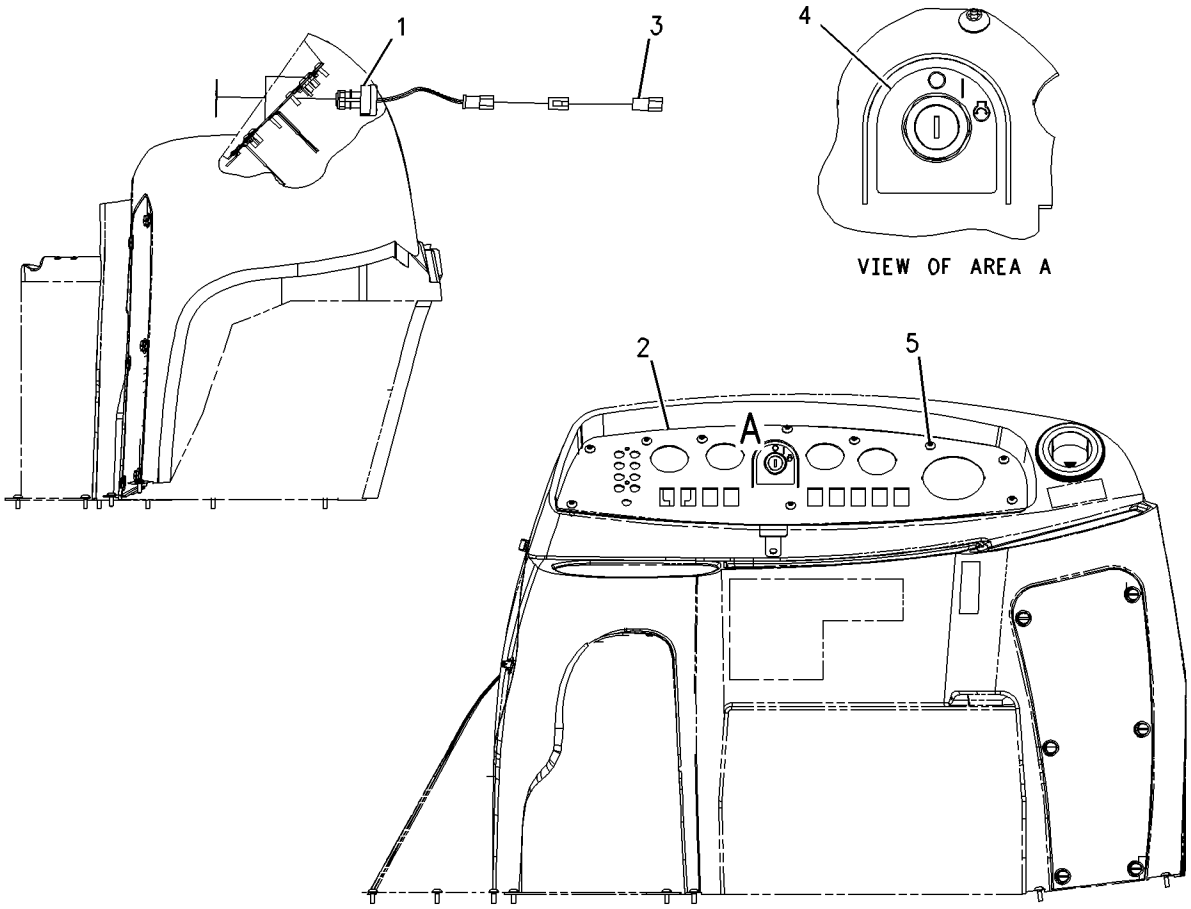


GRAPHIC #1 **<END>** g00844991

# OPERATOR STATION

## 164-1078 PEDAL GP-GOVERNOR

**S/N: BXC1-UP; DSX1-UP**

**PART OF 234-8892 CONTROL GP-GOV & ACCELERATOR**

**SMCS-1265** **i01943271**

| NOTE | REF NO | GRAPHIC REF | PART NUMBER | QTY | PART NAME 1 2 3 4 5 6 (PRODUCT LEVEL) | SEE PAGE |
|---|---|---|---|---|---|---|
| M | 1 | 1 | **129-3178** | 1 | LOCKNUT (M6X1 THD) | |
| M | 2 | 1 | **5C-7261** | 1 | NUT (M8X1.25 THD) | |
| M | 3 | 1 | **5C-9553** | 1 | BOLT (M6X1X16MM) | |
| | 4 | 1 | **8T-4205** | 1 | WASHER-HARD (7.2X14.5X2MM THK) | |
| | 5 | 1 | **8T-6902** | 3 | CLIP | |
| | 6 | 1 | **3F-9556** | 2 | LOCKWASHER | |
| M | 7 | 1 | **095-0641** | 4 | BOLT-SOCKET HEAD (M4X0.7X10MM) | |
| | 8 | 1 | **6V-8186** | 2 | NUT-FULL (5/16-24 THD) | |
| M | 9 | 1 | **9X-2842** | 1 | BOLT (M8X1.25 THD) | |
| | | | | | AVAILABLE REPAIR KIT(S): | |
| | | | **164-1154** | 1 | KIT-SERVICE | |

M-METRIC PART

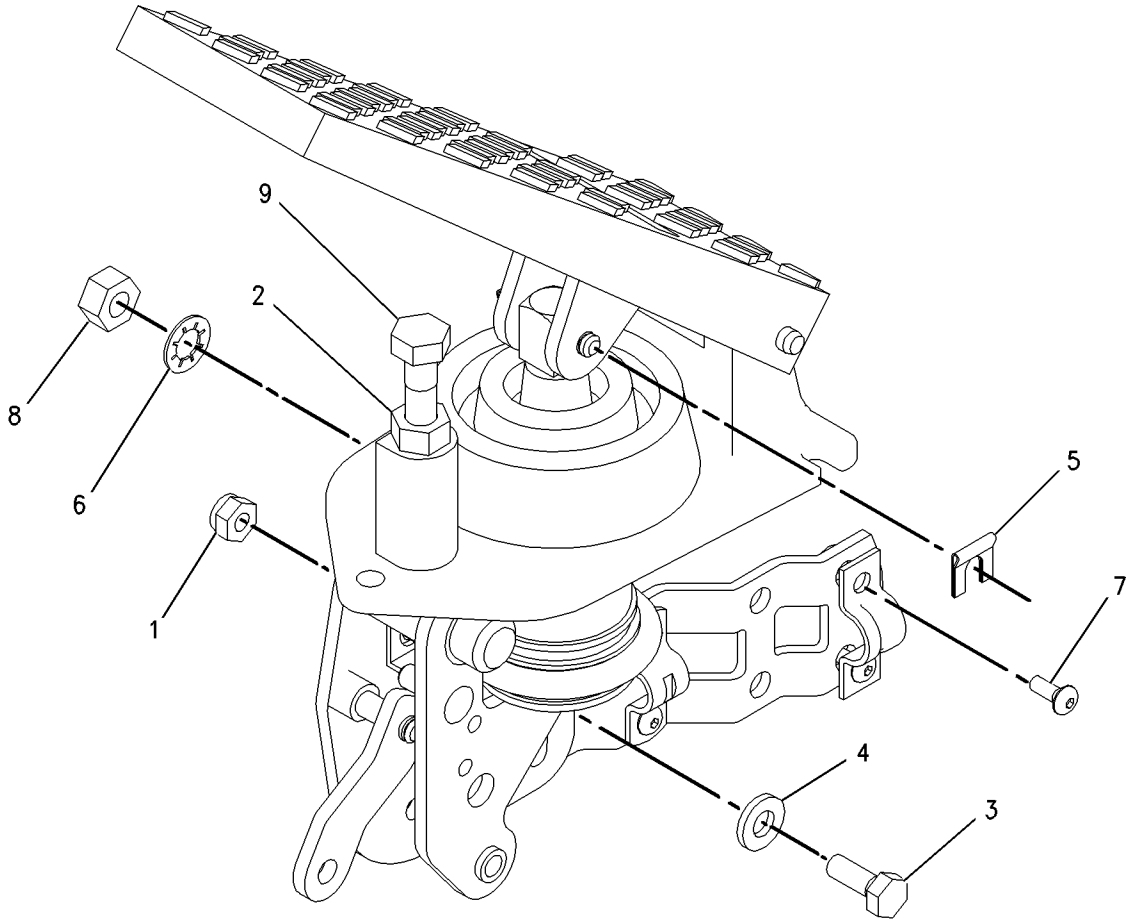


GRAPHIC #1 **<END>** g00832396

# OPERATOR STATION

## *220-2639* SEAT BELT GP

**S/N: BXC1-UP; DSX1-UP**
**AN ATTACHMENT**

**SMCS-7327** **i01709174**

| NOTE | PART NUMBER | QTY | PART NAME 1 2 3 4 5 6 (PRODUCT LEVEL) | SEE PAGE |
|---|---|---|---|---|
| M | **8C-8992** | 2 | BOLT-LOCKING (M12X1.75X30MM) | |
| | **7X-0546** | 3 | WASHER-HARD | |

M-METRIC PART

**<END>**

## *220-2640* SEAT BELT GP

**S/N: BXC1-UP; DSX1-UP**
**AN ATTACHMENT**

**SMCS-7327** **i01738688**

| NOTE | PART NUMBER | QTY | PART NAME 1 2 3 4 5 6 (PRODUCT LEVEL) | SEE PAGE |
|---|---|---|---|---|
| M | **8C-8992** | 2 | BOLT-LOCKING (M12X1.75X30MM) | |
| | **7X-0546** | 3 | WASHER-HARD | |

M-METRIC PART

**<END>**

# OPERATOR STATION

## *164-1209* SEAT GP

**S/N: BXC1-UP; DSX1-UP**
**FABRIC**
**PART OF 164-1201 SEAT GP-SUSPENSION**
**AN ATTACHMENT**

**SMCS-7312, 7321, 7324, 7336** **i02005730**

| NOTE | REF NO | GRAPHIC REF | PART NUMBER | QTY | PART NAME 1 2 3 4 5 6 (PRODUCT LEVEL) | SEE PAGE |
|---|---|---|---|---|---|---|
| Y | 1 | 1 | **8Y-5904** | 2 | ARMREST GP | 702 |
| M | 2 | 1 | **105-3481** | 2 | BOLT-HEX SOCKET (M8X1.25X20MM) | |
| | 3 | 1 | **164-1214** | 4 | KNOB | |
| | 4 | 1 | **164-1244** | 1 | CUSHION AS | |
| | 5 | 1 | **164-1247** | 1 | BRACKET AS | |
| | 6 | 1 | **164-1248** | 1 | PAN | |
| | 7 | 1 | **164-1249** | 1 | LEVER AS | |
| | 8 | 1 | **164-1250** | 1 | HANDLE | |
| | 9 | 1 | **164-1251** | 1 | SPRING | |
| | 10 | 1 | **164-1252** | 1 | SPRING | |
| | 11 | 1 | **4B-5271** | 4 | WASHER (25.5X11.2X2MM THK) | |
| | 12 | 1 | **5P-8245** | 4 | WASHER-HARD (13.5X25.5X3MM THK) | |
| M | 13 | 1 | **8T-4200** | 2 | BOLT (M8X1.25X16MM) | |
| | 14 | 1 | **164-1256** | 2 | SPACER (19.0X25.4X12.5MM THK) | |
| | 15 | 1 | **164-1258** | 1 | BRACKET AS | |
| | 16 | 1 | **164-1259** | 1 | BRACKET AS | |
| | 17 | 1 | **164-1261** | 1 | BRACKET AS | |
| | 18 | 1 | **164-1265** | 4 | BOLT (3/8-16X1.10IN) | |
| | 19 | 1 | **8T-9501** | 2 | SCREW (10-16X.75 IN) | |
| | 20 | 1 | **9X-8873** | 2 | BOLT (1/2-13X2.25 IN) | |
| | 21 | 1 | **180-5796** | 1 | CUSHION AS-SEAT | |
| | 22 | 1 | **180-5797** | 1 | PAN AS | |
| | 23 | 1 | **195-9223** | 2 | SCREW-PAN HEAD | |
| M | 24 | 1 | **129-3180** | 2 | LOCKNUT (M12X1.75 THD) | |
| M | 25 | 1 | **131-3540** | 8 | LOCKNUT (M8X1.25 THD) | |
| | 26 | 1 | **1K-6872** | 2 | LOCKNUT (1/2-13 THD) | |

M-METRIC PART
Y-SEPARATE ILLUSTRATION

*164-1209* **SEAT GP** *(contd.)* **i02005730**

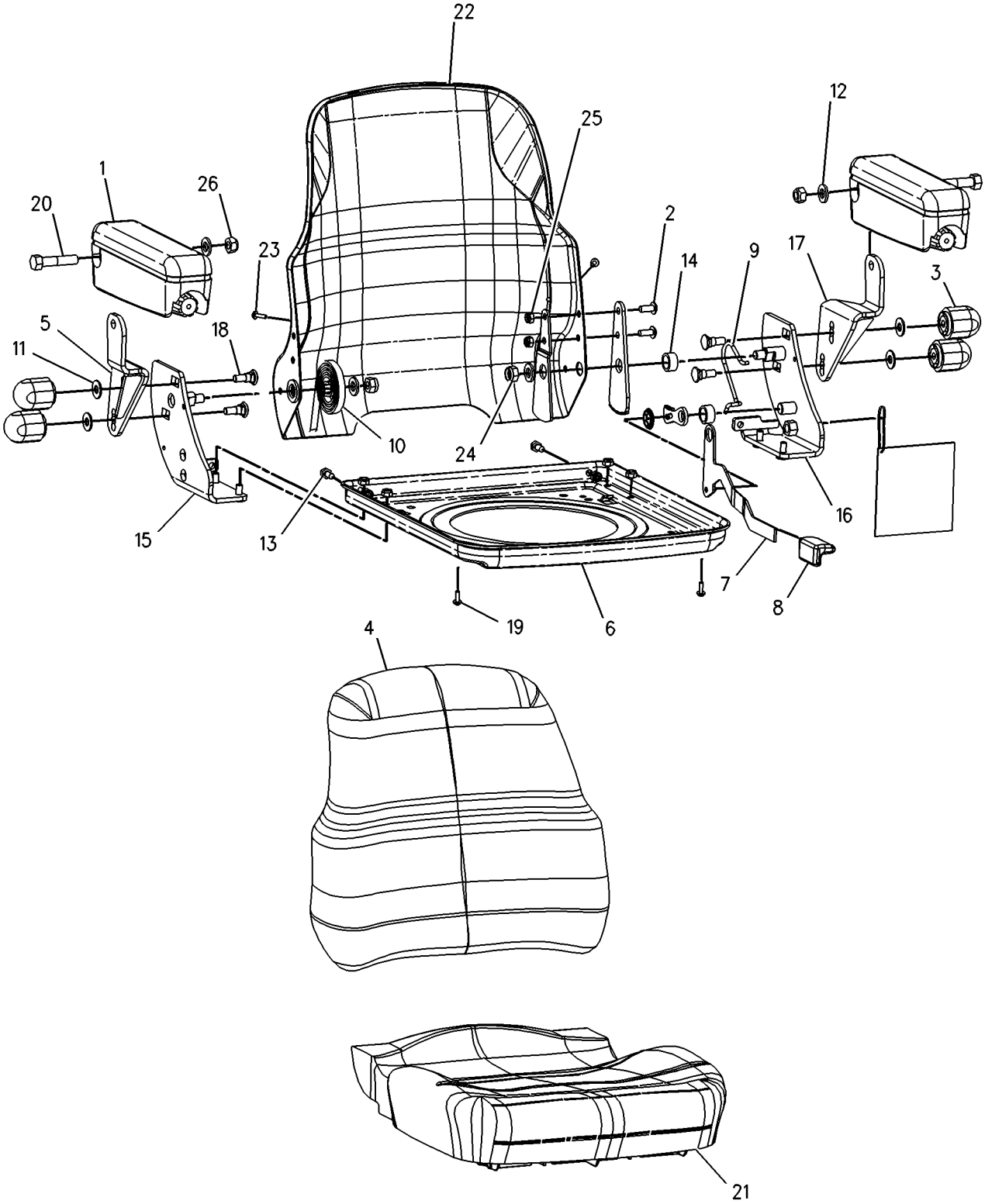


GRAPHIC #1 **<END>** g00890836

# OPERATOR STATION

## *164-1210* SEAT GP

**S/N: BXC1-UP; DSX1-UP**
**VINYL**
**PART OF 164-1202 SEAT GP-SUSPENSION**
**AN ATTACHMENT**

**SMCS-7312, 7321, 7324, 7336** **i01739283**

| NOTE | REF NO | GRAPHIC REF | PART NUMBER | QTY | PART NAME 1 2 3 4 5 6 (PRODUCT LEVEL) | SEE PAGE |
|---|---|---|---|---|---|---|
| Y | 1 | 1 | **8Y-5904** | 2 | ARMREST GP | 702 |
| M | 2 | 1 | **105-3481** | 2 | BOLT-HEX SOCKET (M8X1.25X20MM) | |
| | 3 | 1 | **164-1214** | 4 | KNOB | |
| | 4 | 1 | **164-1247** | 1 | BRACKET AS | |
| | 5 | 1 | **164-1248** | 1 | PAN | |
| | 6 | 1 | **164-1249** | 1 | LEVER AS | |
| | 7 | 1 | **164-1250** | 1 | HANDLE | |
| | 8 | 1 | **164-1251** | 1 | SPRING | |
| | 9 | 1 | **164-1252** | 1 | SPRING | |
| | 10 | 1 | **4B-5271** | 4 | WASHER (25.5X11.2X2MM THK) | |
| | 11 | 1 | **5P-8245** | 4 | WASHER-HARD (13.5X25.5X3MM THK) | |
| M | 12 | 1 | **8T-4200** | 2 | BOLT (M8X1.25X16MM) | |
| | 13 | 1 | **164-1256** | 2 | SPACER (12.5MM THK) | |
| | 14 | 1 | **164-1258** | 1 | BRACKET AS | |
| | 15 | 1 | **164-1259** | 1 | BRACKET AS | |
| | 16 | 1 | **164-1261** | 1 | BRACKET AS | |
| | 17 | 1 | **164-1265** | 4 | BOLT | |
| | 18 | 1 | **164-1266** | 1 | CUSHION AS-BACK | |
| | 19 | 1 | **8T-9501** | 2 | SCREW (10-16X.75 IN) | |
| | 20 | 1 | **9X-8873** | 2 | BOLT (1/2-13X2.25 IN) | |
| | 21 | 1 | **180-5795** | 1 | CUSHION AS-SEAT | |
| | 22 | 1 | **180-5797** | 1 | PAN AS | |
| | 23 | 1 | **195-9223** | 2 | SCREW-PAN HEAD | |
| M | 24 | 1 | **129-3180** | 2 | LOCKNUT (M12X1.75 THD) | |
| M | 25 | 1 | **131-3540** | 8 | LOCKNUT | |
| | 26 | 1 | **1K-6872** | 2 | LOCKNUT (1/2-13 THD) | |

M-METRIC PART
Y-SEPARATE ILLUSTRATION

*164-1210* **SEAT GP** *(contd.)* **i01739283**

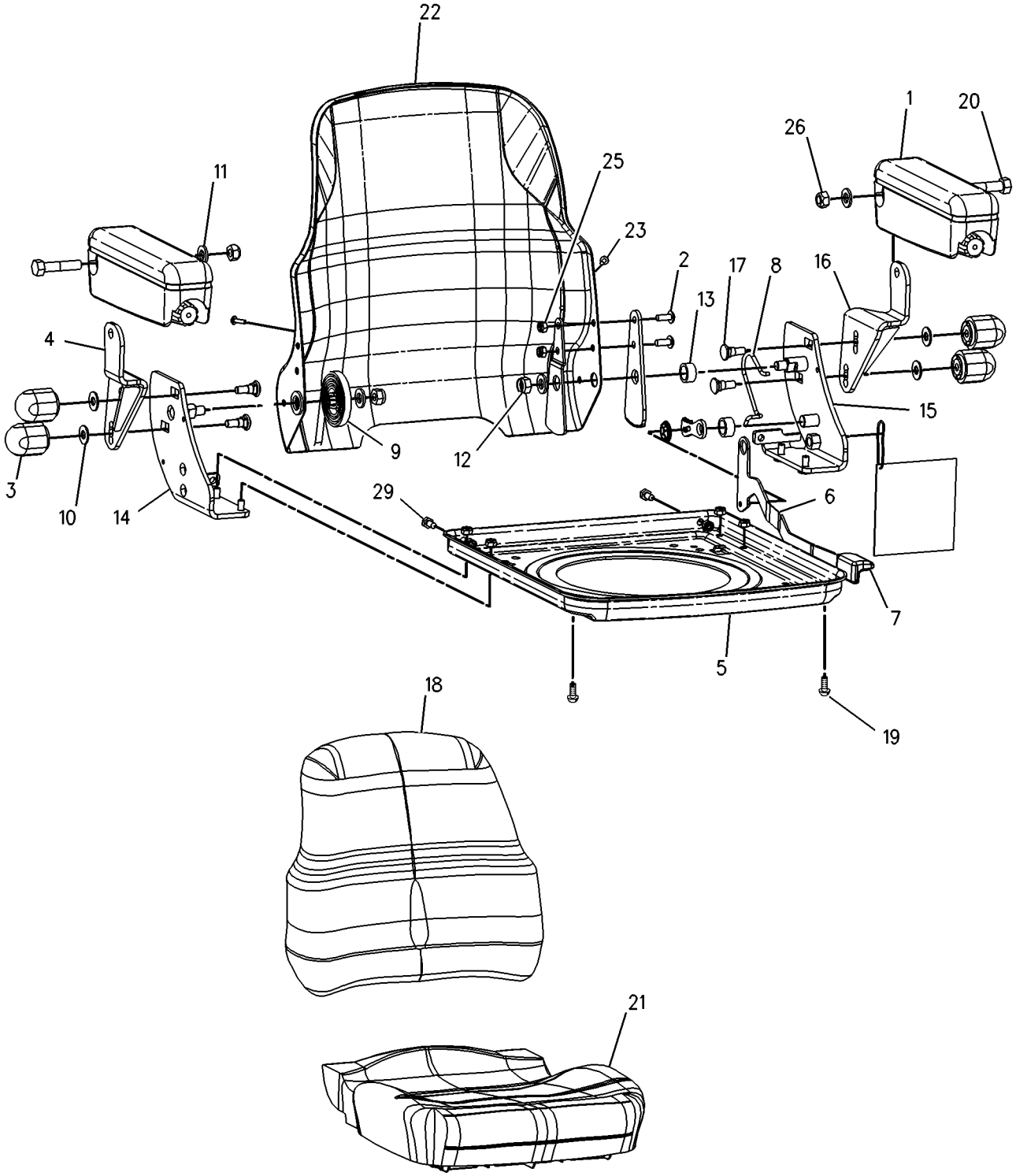


GRAPHIC #1 **<END>** g00890837

# OPERATOR STATION

## 164-1213 SEAT GP

**S/N: BXC1-UP; DSX1-UP**
**DELUXE**
**PART OF 164-1203 SEAT GP-SUSPENSION**
**AN ATTACHMENT**

**SMCS-7312, 7321, 7324, 7336** **i01926986**

| NOTE | REF NO | GRAPHIC REF | PART NUMBER | QTY | PART NAME 1 2 3 4 5 6 (PRODUCT LEVEL) | SEE PAGE |
|---|---|---|---|---|---|---|
| | 1 | 1 | **2M-7819** | 1 | RING-RETAINING | |
| | 2 | 1 | **4B-4278** | 4 | WASHER (10.2X20.5X1.6MM THK) | |
| | 3 | 1 | **6C-3677** | 2 | RIVET-POP | |
| | 4 | 1 | **8S-7803** | 2 | RING-RETAINING | |
| Y | 5 | 1 | **8Y-5904** | 2 | ARMREST GP | 702 |
| | 6 | 1 | **031-4155** | 4 | LOCKNUT (5/16-18 THD) | |
| | 7 | 1 | **095-0878** | 2 | PIN-SPRING | |
| M | 8 | 1 | **105-3481** | 2 | BOLT-HEX SOCKET (M8X1.25X20MM) | |
| | 9 | 1 | **123-6077** | 1 | SHAFT-PIVOT | |
| | 10 | 1 | **132-9240** | 1 | LATCH AS | |
| | 11 | 1 | **135-1706** | 1 | SPRING | |
| | 12 | 1 | **154-8278** | 1 | SPRING-RETURN | |
| | 13 | 1 | **154-8280** | 1 | SPRING-RETURN | |
| | 14 | 1 | **154-8284** | 1 | TUBE | |
| | 15 | 1 | **161-9290** | 1 | WASHER (11.9X20.7X2.3MM THK) | |
| | 16 | 1 | **164-1211** | 1 | LEVER | |
| | 17 | 1 | **164-1212** | 1 | LEVER | |
| | 18 | 1 | **164-1214** | 4 | KNOB | |
| | 19 | 1 | **164-1245** | 1 | CUSHION GP-SEAT | |
| | | 1 | **164-1269** | 1 | BOOT | |
| | | 1 | **164-1270** | 3 | FASTENER | |
| | | 1 | **164-1272** | 1 | ROD AS | |
| | | 1 | **164-1273** | 2 | SPRING-EXTENSION | |
| | 20 | 1 | **164-1246** | 1 | CUSHION AS | |
| | 21 | 1 | **164-1247** | 1 | BRACKET AS | |
| | 22 | 1 | **164-1249** | 1 | LEVER AS | |
| | 23 | 1 | **164-1250** | 1 | HANDLE | |
| | 24 | 1 | **164-1251** | 1 | SPRING | |
| | 25 | 1 | **164-1252** | 1 | SPRING | |
| | 29 | 1 | **164-1256** | 2 | SPACER (19.0X25.4X12.5MM THK) (12.5MM THK) | |
| | 30 | 1 | **164-1257** | 1 | SPACER (19.4X25.4X15.9MM THK) (15.9MM THK) | |
| | 31 | 1 | **164-1258** | 1 | BRACKET AS | |
| | 32 | 1 | **164-1259** | 1 | BRACKET AS | |
| | 33 | 1 | **164-1261** | 1 | BRACKET AS | |
| | 34 | 1 | **164-1262** | 1 | PAN AS | |
| | 35 | 1 | **164-1263** | 1 | PAN AS | |
| | 36 | 1 | **164-1264** | 1 | PAN AS | |
| | 37 | 1 | **164-1265** | 4 | BOLT (3/8-16X1.10IN) | |
| | 38 | 1 | **164-1271** | 2 | SPRING | |
| | 39 | 1 | **164-1274** | 2 | BLOCK | |
| | 40 | 1 | **164-1275** | 1 | BACKREST AS | |
| M | | 1 | **2W-9499** | 2 | BOLT (M6X1.0X40MM) | |
| | | 1 | **8C-0572** | 2 | WASHER (8.8X25.5X2MM THK) | |
| | 41 | 1 | **164-1276** | 2 | TUBE | |
| | 42 | 1 | **164-1277** | 2 | CLIP-SPRING | |
| | 43 | 1 | **164-1295** | 1 | PLATE AS-SLIDE | |
| | 44 | 1 | **180-5780** | 1 | LEVER | |
| | 45 | 1 | **180-5781** | 1 | ROD | |
| | 46 | 1 | **180-5782** | 1 | SPRING | |
| | 47 | 1 | **180-5783** | 1 | FOLLOWER | |
| | 48 | 1 | **180-5784** | 1 | LATCH AS | |
| | 49 | 1 | **180-5785** | 1 | SPRING | |
| | 51 | 1 | **180-5787** | 1 | KNOB | |
| | 52 | 1 | **180-5788** | 1 | BLOCK | |

## 164-1213 SEAT GP *(contd. )*

i01926986

| NOTE | REF NO | GRAPHIC REF | PART NUMBER | QTY | PART NAME 1 2 3 4 5 6 (PRODUCT LEVEL) | SEE PAGE |
|---|---|---|---|---|---|---|
| | 55 | 1 | **180-5791** | 1 | SUPPORT AS-SEAT (LUMBAR) | |
| | 56 | 1 | **195-7055** | 8 | WASHER-HARD (9.9X28.5X3.2MM THK) | |
| | 57 | 1 | **195-9223** | 4 | SCREW-PAN HEAD | |
| M | 58 | 1 | **129-3180** | 2 | LOCKNUT (M12X1.75 THD) | |
| M | 59 | 1 | **131-3540** | 12 | LOCKNUT | |
| | 60 | 1 | **1K-6872** | 2 | LOCKNUT (1/2-13 THD) | |
| | 61 | 1 | **2K-4973** | 4 | LOCKNUT (3/8-16 THD) | |
| | 62 | 1 | **2P-7864** | 2 | SCREW-TAPPING | |
| | 63 | 1 | **3B-4505** | 4 | LOCKWASHER | |
| | 64 | 1 | **4B-5271** | 4 | WASHER (25.5X11.2X2MM THK) | |
| | 65 | 1 | **4H-1641** | 2 | PIN-SPRING | |
| | 66 | 1 | **4M-0061** | 4 | BOLT (5/16-18X.750 IN) | |
| | 67 | 1 | **5P-8245** | 4 | WASHER-HARD (13.5X25.5X3MM THK) | |
| | 68 | 1 | **5S-7379** | 4 | BOLT (3/8-16X0.875 IN) | |
| M | 69 | 1 | **8T-4200** | 2 | BOLT (M8X1.25X16MM) | |
| | 70 | 1 | **8T-7566** | 1 | PIN-SPRING | |
| | 71 | 1 | **9X-8873** | 2 | BOLT (1/2-13X2.25 IN) | |

M-METRIC PART
Y-SEPARATE ILLUSTRATION

**164-1213 SEAT GP** *(contd. )* **i01926986**

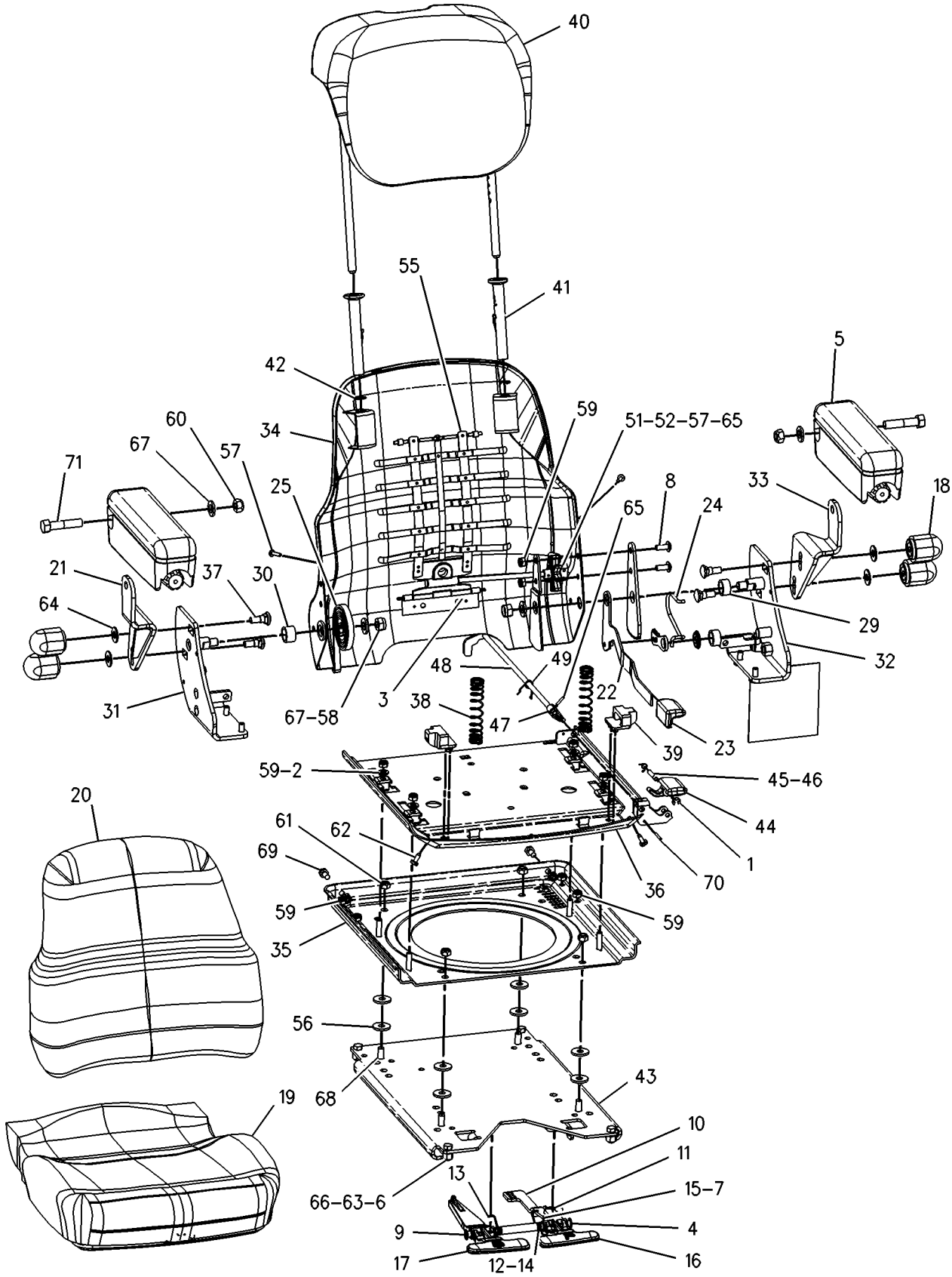


GRAPHIC #1 **<END>** g01002674

# OPERATOR STATION

## *164-1201* SEAT GP-SUSPENSION

**S/N: BXC1-UP; DSX1-UP**
**PART OF 180-5770 SEAT GP-SUSPENSION**
**AN ATTACHMENT**

**SMCS-7324, 7336** **i01507905**

| NOTE | REF NO | GRAPHIC REF | PART NUMBER | QTY | PART NAME 1 2 3 4 5 6 (PRODUCT LEVEL) | SEE PAGE |
|---|---|---|---|---|---|---|
| | 1 | 1 | **8S-7803** | 2 | RING-RETAINING | |
| | 2 | 1 | **095-0878** | 2 | PIN-SPRING | |
| | 3 | 1 | **123-6077** | 1 | SHAFT-PIVOT | |
| | 4 | 1 | **132-9240** | 1 | LATCH AS | |
| | 5 | 1 | **135-1706** | 1 | SPRING | |
| | 6 | 1 | **149-4745** | 2 | KIT-SLIDER BLOCK | |
| | 7 | 1 | **154-8278** | 1 | SPRING-RETURN | |
| | 8 | 1 | **154-8280** | 1 | SPRING-RETURN | |
| | 9 | 1 | **154-8284** | 1 | TUBE | |
| | 10 | 1 | **161-9289** | 2 | BLOCK-SLIDER | |
| | 11 | 1 | **161-9290** | 1 | WASHER (11.9X20.7X2.3MM THK) | |
| Y | 12 | 1 | **164-1207** | 1 | SUSPENSION GP-SEAT | 778 |
| Y | 13 | 1 | **164-1209** | 1 | SEAT GP | 763 |
| | 14 | 1 | **164-1211** | 1 | LEVER | |
| | 15 | 1 | **164-1212** | 1 | LEVER | |
| | 16 | 1 | **164-1295** | 1 | PLATE AS-SLIDE | |
| | 17 | 1 | **173-5787** | 2 | SETSCREW | |
| | 18 | 1 | **195-7055** | 4 | WASHER-HARD (3.2MM THK) | |
| | 19 | 1 | **031-4155** | 4 | LOCKNUT | |
| | 20 | 1 | **2K-4973** | 4 | LOCKNUT (3/8-16 THD) | |
| | 21 | 1 | **3B-4505** | 4 | LOCKWASHER | |
| | 22 | 1 | **4L-6454** | 4 | BOLT (3/8-16X1 IN) | |
| | 23 | 1 | **4M-0061** | 4 | BOLT (5/16-18X0.750 IN) | |

Y-SEPARATE ILLUSTRATION

*164-1201* **SEAT GP-SUSPENSION** *(contd.)* **i01507905**

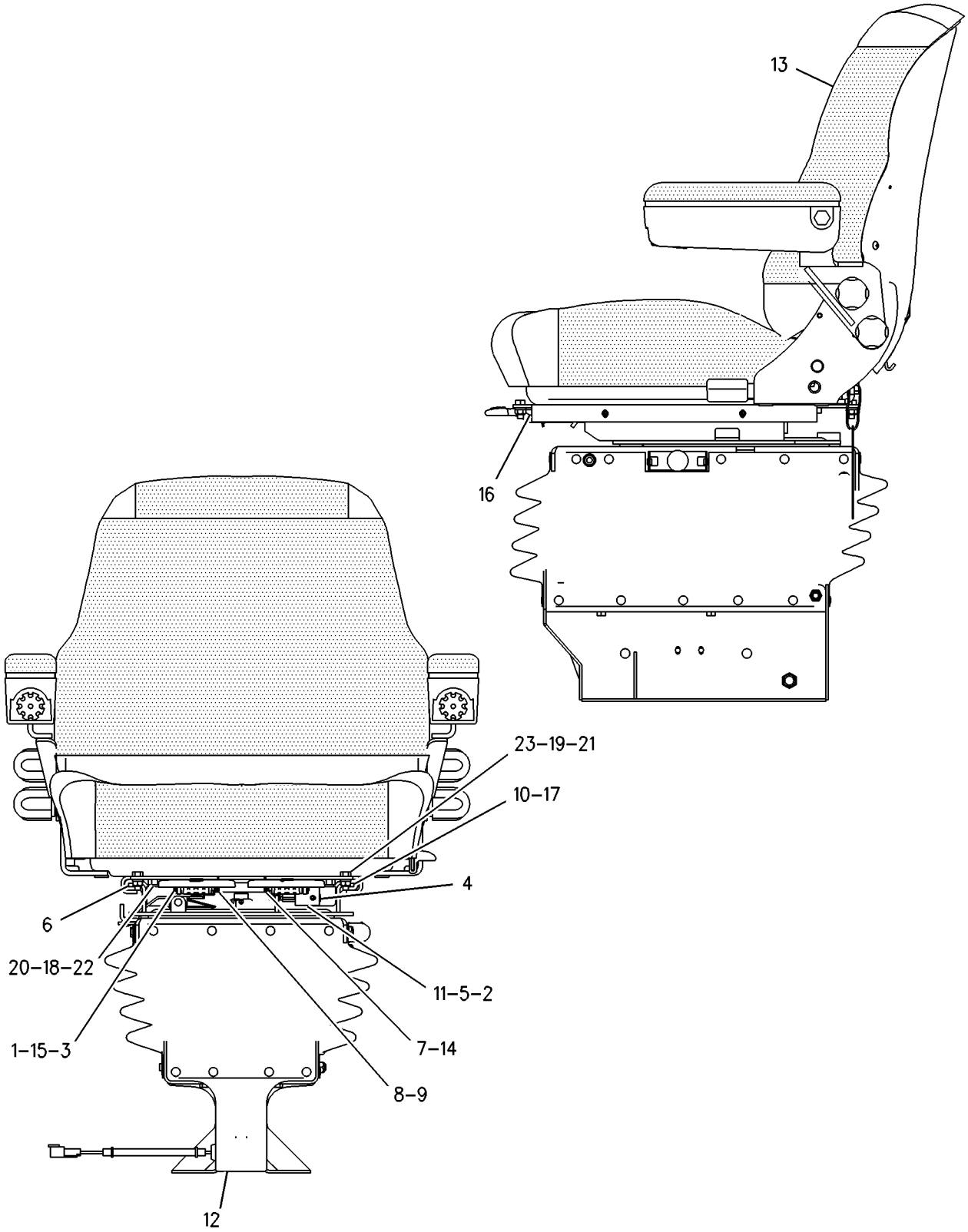


GRAPHIC #1 **<END>** g00759727

# OPERATOR STATION

## *164-1202* SEAT GP-SUSPENSION

**S/N: BXC1-UP; DSX1-UP**
**PART OF 180-5771 SEAT GP-SUSPENSION**
**AN ATTACHMENT**

**SMCS-7324, 7336** **i01507909**

| NOTE | REF NO | GRAPHIC REF | PART NUMBER | QTY | PART NAME 1 2 3 4 5 6 (PRODUCT LEVEL) | SEE PAGE |
|---|---|---|---|---|---|---|
| | 1 | 1 | **8S-7803** | 2 | RING-RETAINING | |
| | 2 | 1 | **123-6077** | 1 | SHAFT-PIVOT | |
| | 3 | 1 | **132-9240** | 1 | LATCH AS | |
| | 4 | 1 | **135-1706** | 1 | SPRING | |
| | 5 | 1 | **149-4745** | 2 | KIT-SLIDER BLOCK | |
| | 6 | 1 | **154-8278** | 1 | SPRING-RETURN | |
| | 7 | 1 | **154-8280** | 1 | SPRING-RETURN | |
| | 8 | 1 | **154-8284** | 1 | TUBE | |
| | 9 | 1 | **161-9289** | 2 | BLOCK-SLIDER | |
| | 10 | 1 | **161-9290** | 1 | WASHER (11.9X20.7X2.3MM THK) | |
| Y | 11 | 1 | **164-1207** | 1 | SUSPENSION GP-SEAT | 778 |
| Y | 12 | 1 | **164-1210** | 1 | SEAT GP | 765 |
| | 13 | 1 | **164-1211** | 1 | LEVER | |
| | 14 | 1 | **164-1212** | 1 | LEVER | |
| | 15 | 1 | **164-1295** | 1 | PLATE AS-SLIDE | |
| | 16 | 1 | **173-5787** | 2 | SETSCREW | |
| | 17 | 1 | **195-7055** | 4 | WASHER-HARD (3.2MM THK) | |
| | 18 | 1 | **031-4155** | 4 | LOCKNUT | |
| | 19 | 1 | **095-0878** | 2 | PIN-SPRING | |
| | 20 | 1 | **2K-4973** | 4 | LOCKNUT (3/8-16 THD) | |
| | 21 | 1 | **3B-4505** | 4 | LOCKWASHER | |
| | 22 | 1 | **4L-6454** | 4 | BOLT (3/8-16X1 IN) | |
| | 23 | 1 | **4M-0061** | 4 | BOLT (5/16-18X0.750 IN) | |
| | | | | | AVAILABLE REPAIR KIT(S): | |
| | | | **161-9744** | 1 | KIT-SLIDER BLOCK | |

Y-SEPARATE ILLUSTRATION

*164-1202* **SEAT GP-SUSPENSION** *(contd.)* **i01507909**

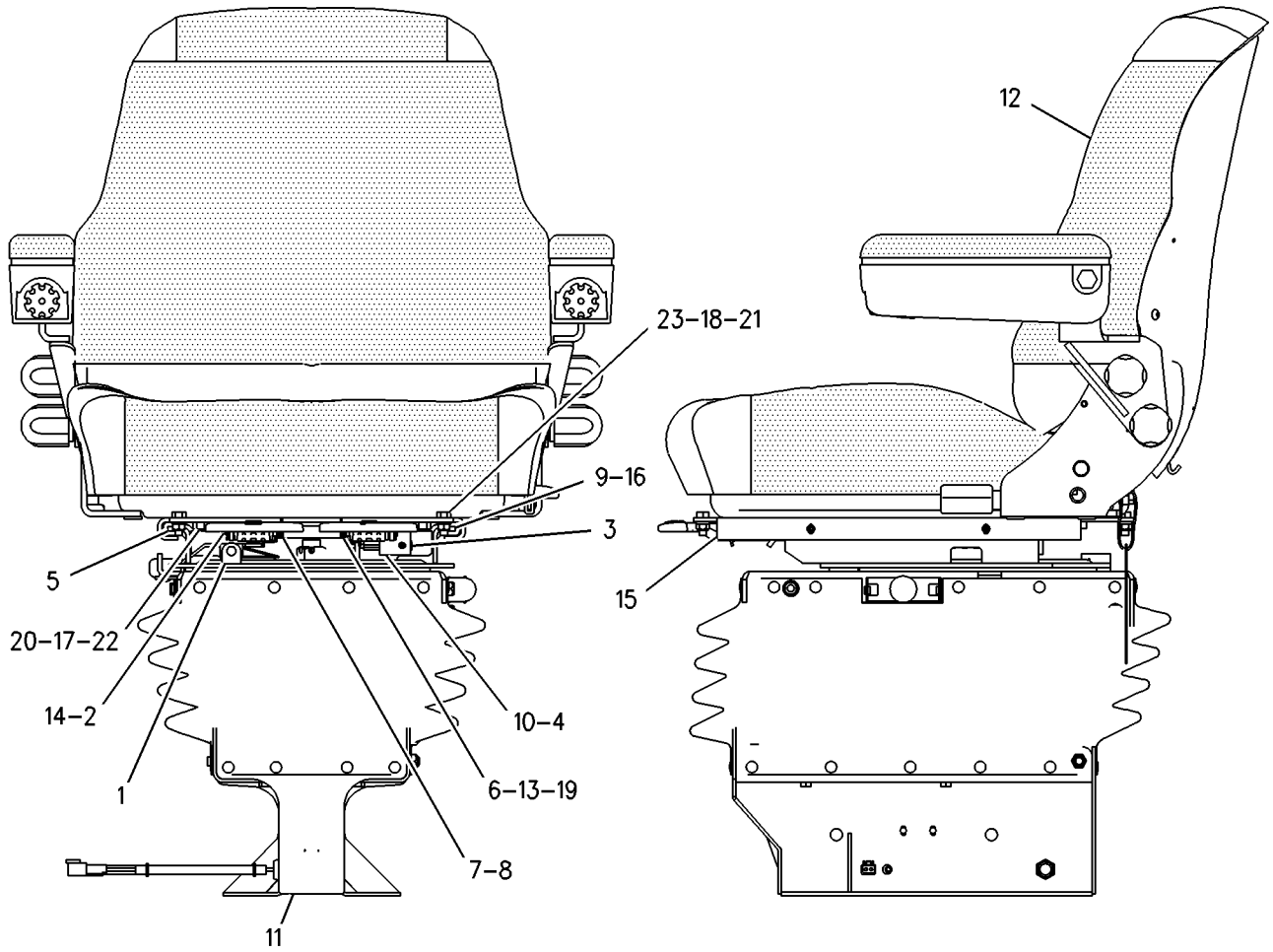


GRAPHIC #1 **<END>** g00759725

# OPERATOR STATION

## *164-1203* SEAT GP-SUSPENSION

**S/N: BXC1-UP; DSX1-UP**
**FABRIC**
**PART OF 180-5772 SEAT GP-SUSPENSION**
**AN ATTACHMENT**

**SMCS-7324, 7336** **i01498189**

| NOTE | REF NO | GRAPHIC REF | PART NUMBER | QTY | PART NAME 1 2 3 4 5 6 (PRODUCT LEVEL) | SEE PAGE |
|---|---|---|---|---|---|---|
| | 1 | 1 | **149-4745** | 2 | KIT-SLIDER BLOCK | |
| | 2 | 1 | **161-9289** | 2 | BLOCK-SLIDER | |
| Y | 3 | 1 | **164-1207** | 1 | SUSPENSION GP-SEAT | 778 |
| Y | 4 | 1 | **164-1213** | 1 | SEAT GP | 767 |
| | 5 | 1 | **173-5787** | 2 | SETSCREW | |
| | | | | | AVAILABLE REPAIR KIT(S): | |
| | | | **161-9744** | 1 | KIT-SLIDER BLOCK | |

Y-SEPARATE ILLUSTRATION

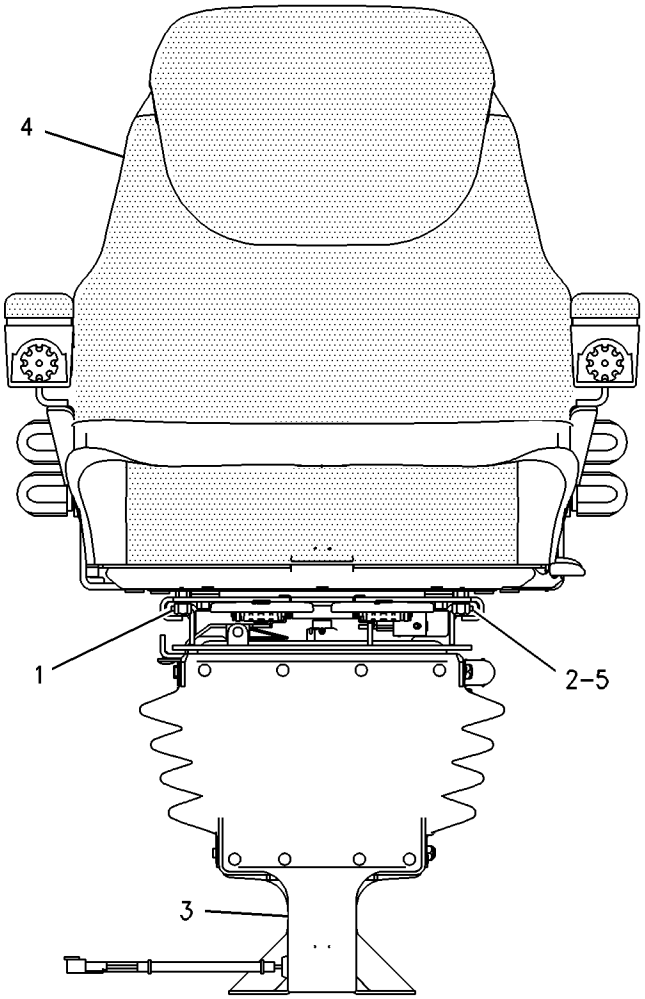


GRAPHIC #1 **<END>** g00759724

# OPERATOR STATION

## *180-5770* SEAT GP-SUSPENSION

**S/N: BXC1-UP; DSX1-UP**
**FABRIC, STANDARD**
**AN ATTACHMENT**

**SMCS-7324, 7336** **i01670244**

| NOTE | PART NUMBER | QTY | PART NAME 1 2 3 4 5 6 (PRODUCT LEVEL) | SEE PAGE |
|---|---|---|---|---|
| Y | **164-1201** | 1 | SEAT GP-SUSPENSION | 770 |
| M | **8T-4139** | 4 | BOLT (M12X1.75X30MM) | |
| | **3S-2093** | 1 | STRAP-CABLE | |
| | **8T-4223** | 4 | WASHER-HARD (13.5X25.5X3MM THK) | |

M-METRIC PART
Y-SEPARATE ILLUSTRATION

**<END>**

## *180-5771* SEAT GP-SUSPENSION

**S/N: BXC1-UP; DSX1-UP**
**VINYL, STANDARD**
**AN ATTACHMENT**

**SMCS-7324, 7336** **i01670246**

| NOTE | PART NUMBER | QTY | PART NAME 1 2 3 4 5 6 (PRODUCT LEVEL) | SEE PAGE |
|---|---|---|---|---|
| Y | **164-1202** | 1 | SEAT GP-SUSPENSION | 772 |
| M | **8T-4139** | 4 | BOLT (M12X1.75X30MM) | |
| | **3S-2093** | 1 | STRAP-CABLE | |
| | **8T-4223** | 4 | WASHER-HARD (13.5X25.5X3MM THK) | |

M-METRIC PART
Y-SEPARATE ILLUSTRATION

**<END>**

## *180-5772* SEAT GP-SUSPENSION

**S/N: BXC1-UP; DSX1-UP**
**FABRIC, DELUXE**
**PART OF 214-7008, 214-7009 CAB AR-ENCLOSED ROPS**
**AN ATTACHMENT**

**SMCS-7324, 7336** **i01670247**

| NOTE | PART NUMBER | QTY | PART NAME 1 2 3 4 5 6 (PRODUCT LEVEL) | SEE PAGE |
|---|---|---|---|---|
| Y | **164-1203** | 1 | SEAT GP-SUSPENSION | 774 |
| M | **8T-4139** | 4 | BOLT (M12X1.75X30MM) | |
| | **3S-2093** | 1 | STRAP-CABLE | |
| | **8T-4223** | 4 | WASHER-HARD (13.5X25.5X3MM THK) | |

M-METRIC PART
Y-SEPARATE ILLUSTRATION

**<END>**

# OPERATOR STATION

## *164-1165* SUPPRESSION GP-SOUND

**S/N: BXC1-UP; DSX1-UP**

**PART OF 214-7006, 214-7007 CAB AR, 214-7008, 214-7009 CAB AR-ENCLOSED ROPS**

**AN ATTACHMENT**

**SMCS-7329, 7330** **i02003837**

| NOTE | REF NO | GRAPHIC REF | PART NUMBER | QTY | PART NAME 1 2 3 4 5 6 (PRODUCT LEVEL) | SEE PAGE |
|---|---|---|---|---|---|---|
| | 1 | 1 | **229-6051** | 8 | SPACER (4.5X8X10MM THK) | |
| | 2 | 1 | **4V-2264** | 8 | NUT-PUSH | |
| | 3 | 1 | **9U-8263** | 1 | COVER | |
| | 4 | 1 | **084-4277** | 1 | LAMP GP-DOME | |
| | | 1 | **6R-7490** | 1 | LAMP (12 VOLT, 10 WATT) | |
| M | 5 | 1 | **113-0920** | 8 | BOLT-HEX SOCKET (M4X0.7X35MM) | |
| | 6 | 1 | **130-8432** | 1 | PLATE-FACE | |
| | 7 | 1 | **164-1152** | 1 | BRACKET AS | |
| M | | 1 | **6V-9632** | 4 | NUT-WELD (M6X1 THD) | |
| | | 1 | **7T-1099** | 2 | LINK | |
| | 8 | 1 | **164-1156** | 1 | COVER | |
| | 9 | 1 | **164-1157** | 1 | COVER | |
| | 10 | 1 | **164-1166** | 1 | LINER-CAB | |
| | 11 | 1 | **169-7290** | 2 | SPEAKER | |
| | 12 | 1 | **169-7291** | 2 | COVER-SPEAKER | |
| | 13 | 1 | **197-8973** | 6 | FASTENER-PANEL | |
| | 14 | 1 | **200-5356** | 1 | PLATE AS | |
| | 15 | 1 | **229-6052** | 6 | SPACER (9.7X12.7X7.5MM THK) | |
| M | 16 | 1 | **131-3985** | 2 | SCREW (M6X1 THD) | |
| | 17 | 1 | **200-3004** | 2 | SCREW-TRUSS HEAD (M6X1X45MM) | |
| | 18 | 1 | **6V-2410** | 8 | SCREW-WASHER HEAD | |
| | 19 | 1 | **8T-4121** | 2 | WASHER-HARD (11X21X2.5MM THK) | |
| M | 20 | 1 | **8T-4137** | 2 | BOLT (M10X1.5X20MM) | |
| | 21 | 1 | **8T-4205** | 2 | WASHER-HARD (7.2X14.5X2MM THK) | |
| M | 22 | 1 | **9X-2041** | 4 | SCREW-TRUSS HEAD (M10X1.5X20MM) | |
| M | 23 | 1 | **9X-2045** | 4 | SCREW-TRUSS HEAD (M6X1X20MM) | |
| E | 24 | 1 | **129-1855** | | FASTENER-HOOK (18CM EACH) | |
| E | 25 | 1 | **129-1854** | | FASTENER-LOOP (18CM EACH) | |
| E | 26 | 1 | **129-1855** | | FASTENER-HOOK (16CM) | |
| E | 27 | 1 | **129-1854** | | FASTENER-LOOP (16CM) | |

E-ORDER BY THE CENTIMETER
M-METRIC PART

*164-1165* **SUPPRESSION GP-SOUND** *(contd.)* **i02003837**

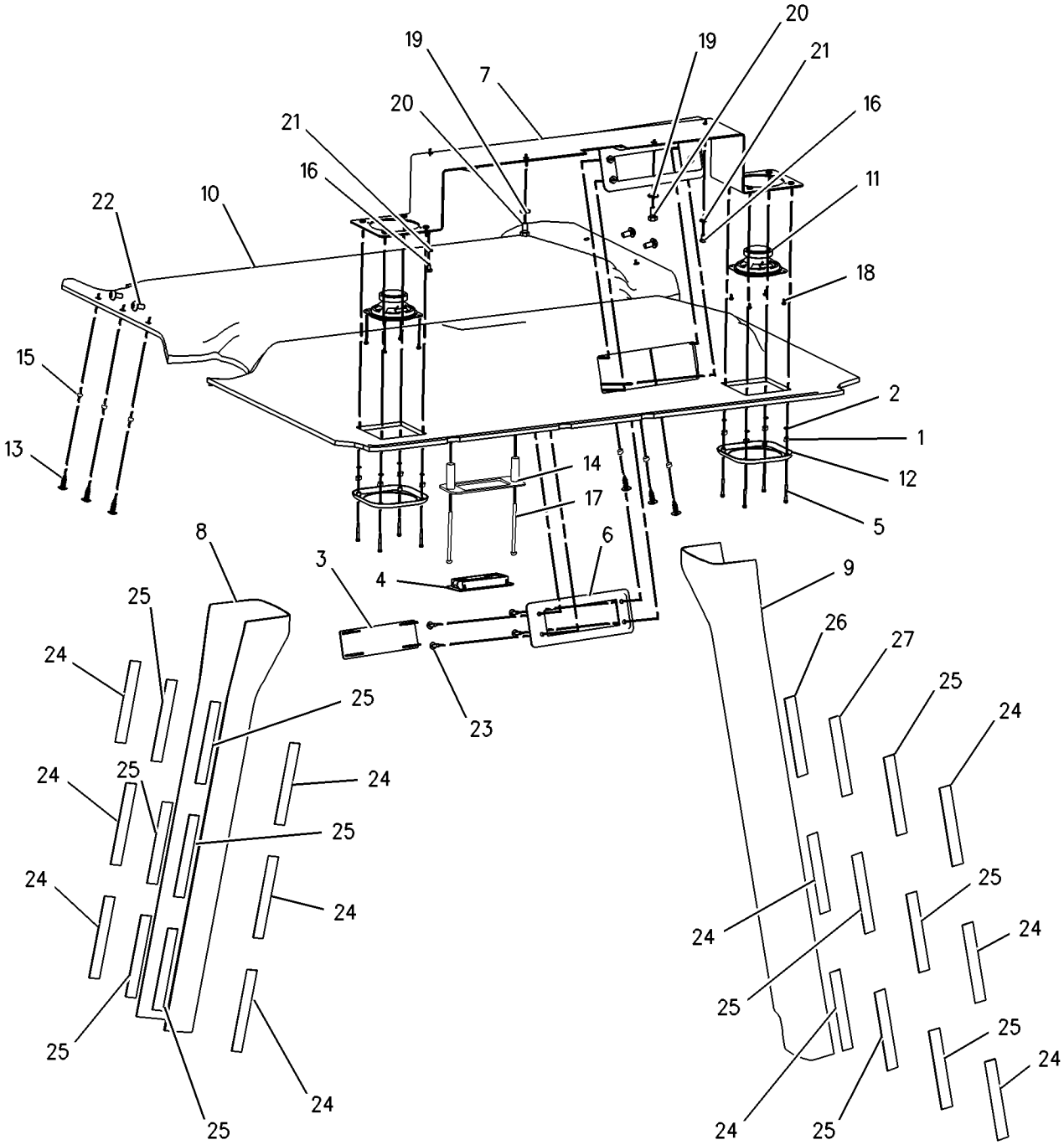


GRAPHIC #1 **<END>** g00892547

# OPERATOR STATION

## 164-1207 SUSPENSION GP-SEAT—AIR

**S/N: BXC1-UP; DSX1-UP**
**SWIVEL**
**PART OF 164-1201, 164-1202, 164-1203 SEAT GP-SUSPENSION**
**AN ATTACHMENT**

**SMCS-7312, 7324** **i01739920**

| NOTE | REF NO | GRAPHIC REF | PART NUMBER | QTY | PART NAME 1 2 3 4 5 6 (PRODUCT LEVEL) | SEE PAGE |
|---|---|---|---|---|---|---|
| | 1 | 1 | **111-5042** | 34 | FASTENER | |
| M | 2 | 1 | **129-3180** | 1 | LOCKNUT (M12X1.75 THD) | |
| | 3 | 1 | **130-8343** | 1 | SCREW-BUTTON HEAD | |
| | 4 | 1 | **161-9282** | 1 | BOLT (3/4-10 X1.5) | |
| | 5 | 1 | **161-9283** | 1 | WASHER (1.6MM THK) | |
| | 6 | 1 | **161-9285** | 1 | NUT (3/4-10 THD) | |
| | 7 | 1 | **163-1135** | 1 | SPRING | |
| | 8 | 1 | **163-1139** | 1 | BRACKET | |
| | 9 | 1 | **3B-4631** | 1 | PIN-COTTER | |
| | 10 | 1 | **164-1215** | 1 | ABSORBER AS-SHOCK | |
| | 11 | 1 | **164-1216** | 1 | BASE AS | |
| | 12 | 1 | **164-1217** | 1 | ARM AS-SUSPENSION | |
| | 13 | 1 | **164-1218** | 2 | ARM AS-SUSPENSION | |
| | 14 | 1 | **164-1219** | 1 | BRACKET AS | |
| | 15 | 1 | **164-1220** | 1 | BRACKET AS | |
| | 16 | 1 | **164-1221** | 1 | AIR COMPRESSOR GP | |
| | 17 | 1 | **164-1224** | 2 | SHAFT AS | |
| | 18 | 1 | **164-1225** | 2 | SHAFT AS | |
| | 19 | 1 | **164-1226** | 2 | SHAFT | |
| | 20 | 1 | **164-1228** | 1 | HARNESS AS | |
| | 21 | 1 | **164-1229** | 4 | BUMPER | |
| | 22 | 1 | **164-1230** | 12 | BEARING | |
| | 23 | 1 | **164-1231** | 2 | BEARING | |
| | 24 | 1 | **164-1232** | 1 | PLATE | |
| | 25 | 1 | **164-1233** | 2 | SPACER (13X25.4X20.5MM THK) | |
| | 26 | 1 | **164-1234** | 1 | PLATE | |
| | 27 | 1 | **164-1237** | 1 | BUSHING | |
| | 28 | 1 | **164-1238** | 1 | SPACER (12.8X22.2X3.1MM THK) | |
| | 29 | 1 | **164-1239** | 2 | SPACER (13.5X19X61.9MM THK) | |
| | 30 | 1 | **164-1240** | 1 | BOOT | |
| | 31 | 1 | **185-3890** | 2 | SCREW-PAN HEAD | |
| | 32 | 1 | **175-5050** | 1 | VALVE AS | |
| | 33 | 1 | **180-5793** | 1 | RING | |
| | 34 | 1 | **197-6657** | 1 | BOLT-ROUND HEAD | |
| | 35 | 1 | **1K-6872** | 1 | LOCKNUT (1/2-13 THD) | |
| | 36 | 1 | **2K-4973** | 8 | LOCKNUT (3/8-16 THD) | |
| | 37 | 1 | **3S-2093** | 2 | STRAP-CABLE | |
| | 38 | 1 | **4B-9784** | 8 | BALL | |
| | 39 | 1 | **4K-0499** | 2 | LOCKWASHER | |
| | 40 | 1 | **5M-3062** | 1 | BOLT (3/8-16X0.75 IN) | |
| | 41 | 1 | **6V-8185** | 8 | NUT (1/4-20 THD) | |
| | 42 | 1 | **7X-0481** | 1 | BOLT (203.2MM) | |
| | 43 | 1 | **7X-0622** | 2 | WASHER (13X24X2.5MM THK) | |
| | 44 | 1 | **8T-9364** | 4 | BOLT (1/4-20X0.625 IN) | |
| | 45 | 1 | **1H-3337** | 2 | BOLT (1/4-20X0.875 IN) | |
| | 46 | 1 | **164-1236** | 2 | PLATE AS | |
| | 47 | 1 | **180-5794** | 2 | PLATE | |
| | 48 | 1 | **197-6658** | 1 | WASHER | |
| | 49 | 1 | **164-1208** | 1 | PLATE AS | |
| | 50 | 1 | **8S-7803** | 1 | RING-RETAINING | |
| | 51 | 1 | **161-9286** | 1 | SPRING-LATCH | |
| | 52 | 1 | **161-9288** | 1 | SHAFT-PIVOT | |
| | 53 | 1 | **164-1294** | 1 | LATCH GP-SEAT SWIVEL | |
| | | 1 | **9C-4457** | 1 | FASTENER | |

## 164-1207 SUSPENSION GP-SEAT *(contd. )* i01739920

M-METRIC PART

## 164-1207 SUSPENSION GP-SEAT *(contd. )* i01739920

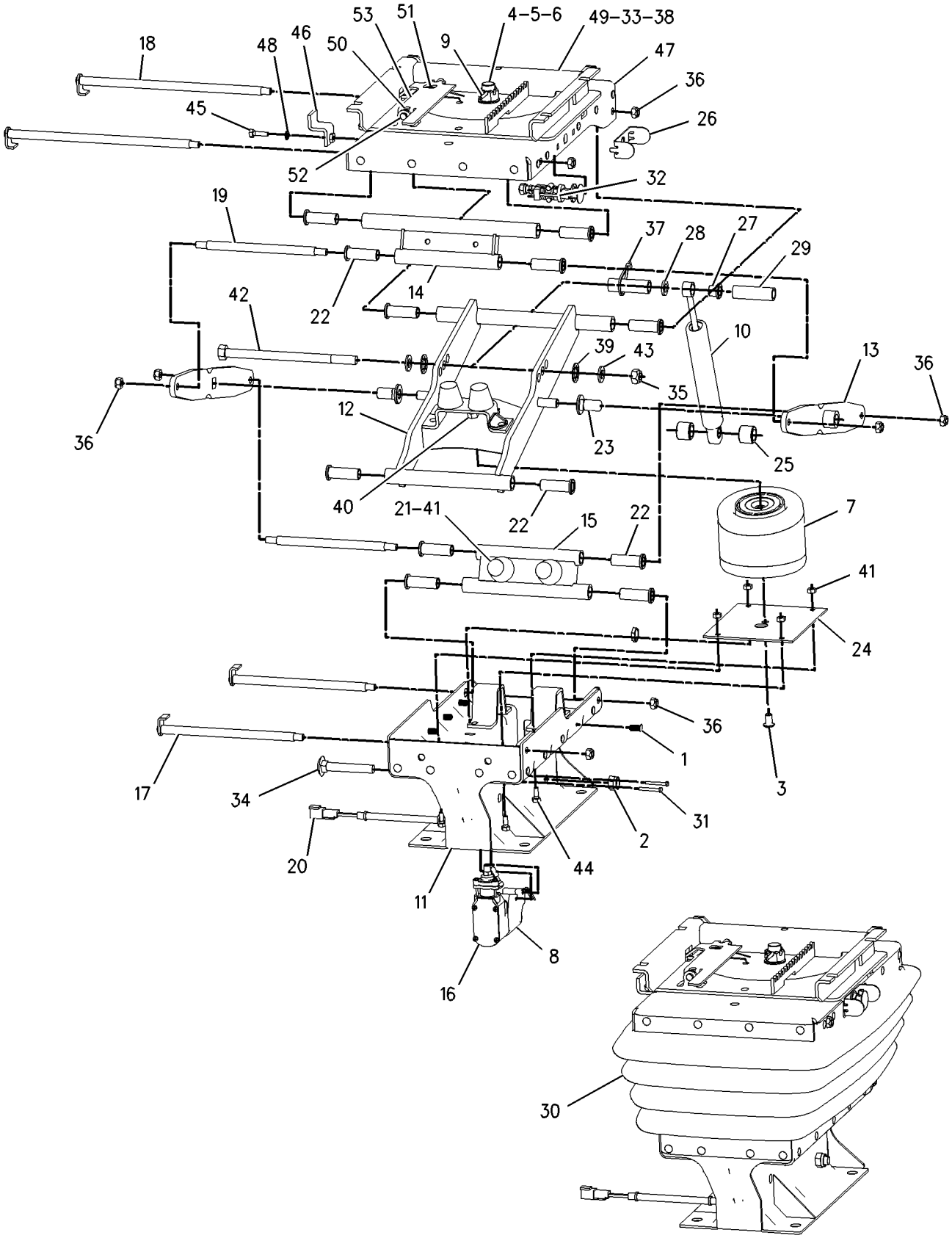


GRAPHIC #1 **<END>** g00760151

# OPERATOR STATION

## 239-1080 TACHOMETER GP-ELECTRIC

**S/N: BXC1-UP; DSX1-UP**
**PART OF 214-7007 CAB AR, 214-7009 CAB AR-ENCLOSED ROPS**
**AN ATTACHMENT**

**SMCS-7462** **i01986579**

| NOTE | REF NO | GRAPHIC REF | PART NUMBER | QTY | PART NAME 1 2 3 4 5 6 (PRODUCT LEVEL) | SEE PAGE |
|---|---|---|---|---|---|---|
| | 1 | 1 | **4B-2043** | 7 | NUT (8-32 THD) | |
| | 2 | 1 | **9B-7233** | 7 | LOCKWASHER | |
| | 3 | 1 | **122-7137** | 1 | LAMP (12 VOLT) | |
| | 4 | 1 | **131-1424** | 1 | SEAL | |

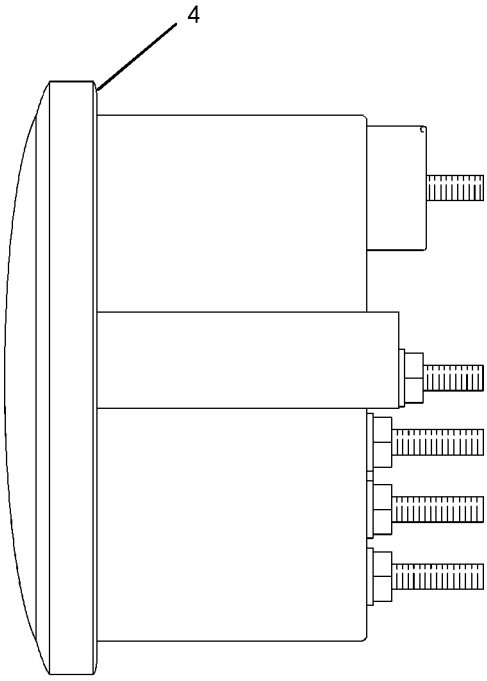


LEFT SIDE VIEW

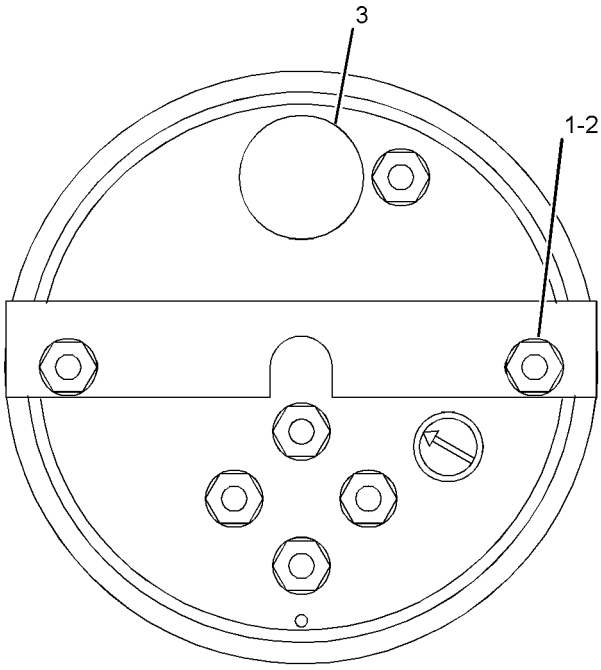


REAR VIEW

GRAPHIC #1 **<END>** g01030656

# OPERATOR STATION

## 239-1081 TACHOMETER GP-ELECTRIC

**S/N: BXC1-UP; DSX1-UP**

**PART OF 214-7006 CAB AR, 214-7008 CAB AR-ENCLOSED ROPS, 214-7004 CANOPY AR AN ATTACHMENT**

**SMCS-7462** **i01986560**

| NOTE | REF NO | GRAPHIC REF | PART NUMBER | QTY | PART NAME 1 2 3 4 5 6 (PRODUCT LEVEL) | SEE PAGE |
|---|---|---|---|---|---|---|
| | 1 | 1 | **4B-2043** | 6 | NUT (8-32 THD) | |
| | 2 | 1 | **9B-7233** | 6 | LOCKWASHER | |
| | 3 | 1 | **122-7137** | 1 | LAMP (12 VOLT) | |
| | 4 | 1 | **131-1424** | 1 | SEAL | |

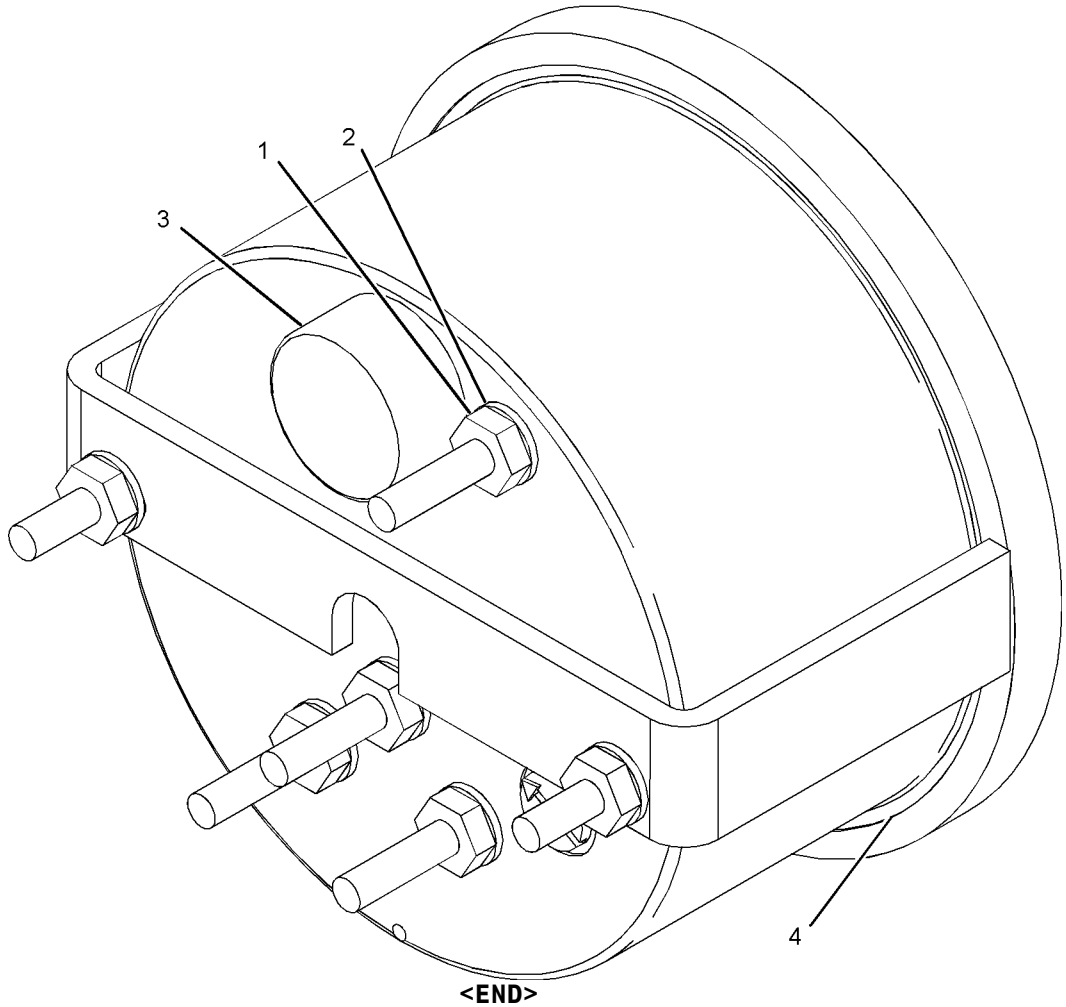


GRAPHIC #1 **<END>** g01029996

# OPERATOR STATION

## *164-1370* TRIM GP-CAB

**S/N: BXC1-UP; DSX1-UP**
**BRUSH SEALS**
**PART OF 214-7006, 214-7007 CAB AR, 214-7008, 214-7009 CAB AR-ENCLOSED ROPS, 214-7004 CANOPY AR**
**AN ATTACHMENT**

**SMCS-7329, 7451** **i01854069**

| NOTE | REF NO | GRAPHIC REF | PART NUMBER | QTY | PART NAME 1 2 3 4 5 6 (PRODUCT LEVEL) | SEE PAGE |
|---|---|---|---|---|---|---|
| | 1 | 1 | **9R-1948** | 4 | RIVET | |
| | 2 | 1 | **164-1110** | 1 | COVER (PARK BRAKE) | |
| | 3 | 1 | **164-1366** | 1 | BRUSH AS | |
| M | 4 | 1 | **9X-2044** | 2 | SCREW-TRUSS HEAD (M6X1X16MM) | |

M-METRIC PART

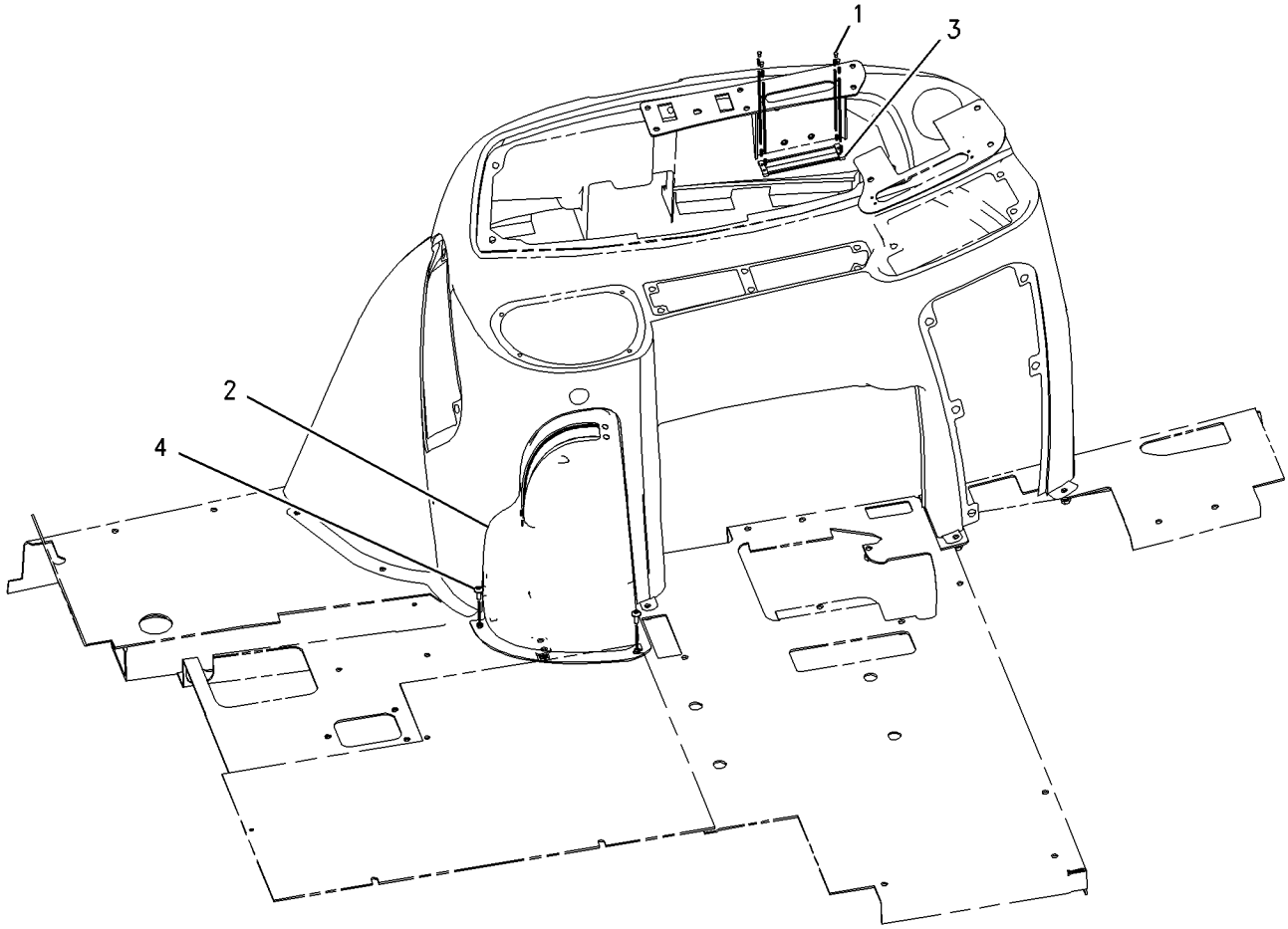


GRAPHIC #1 **<END>** g00945196

# OPERATOR STATION

## *108-8251* VISOR GP-CAB

**S/N: BXC1-UP; DSX1-UP**
**PART OF 214-7008, 214-7009 CAB AR-ENCLOSED ROPS**
**AN ATTACHMENT**

**SMCS-7301, 7325, 7335** **i01496043**

| NOTE | REF NO | GRAPHIC REF | PART NUMBER | QTY | PART NAME 1 2 3 4 5 6 (PRODUCT LEVEL) | SEE PAGE |
|---|---|---|---|---|---|---|
| | 1 | 1 | **9R-3205** | 1 | VISOR AS | |
| | 2 | 1 | **9R-3204** | 1 | PLATE AS | |
| M | 3 | 1 | **8T-4171** | 4 | BOLT (M6X1X12MM) | |
| | 4 | 1 | **9R-3203** | 2 | PLATE | |

M-METRIC PART

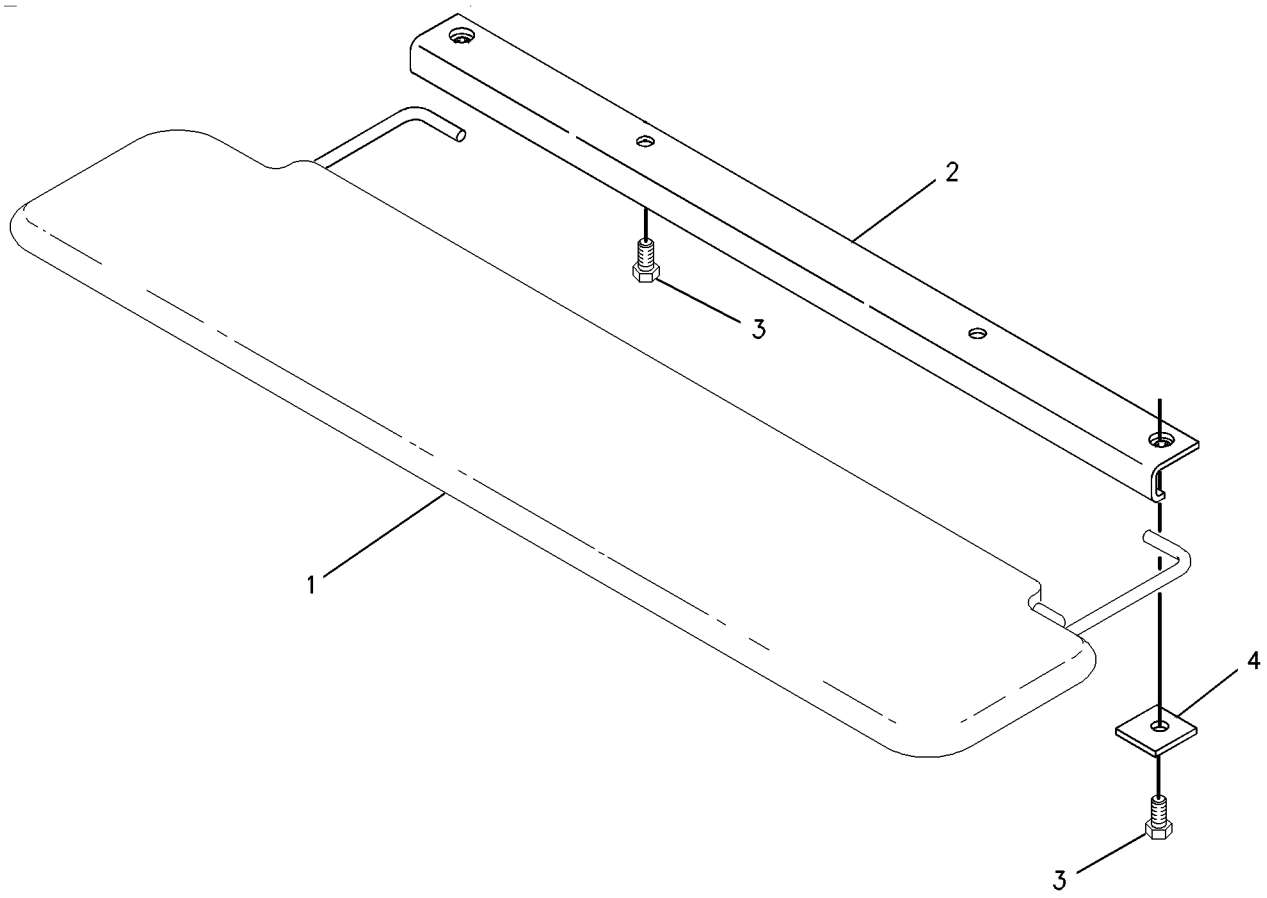


GRAPHIC #1 **<END>** g00776555

# OPERATOR STATION

## *167-8187* WASHER GP-WINDOW

**S/N: BXC1-UP; DSX1-UP**

**PART OF 214-7006, 214-7007 CAB AR, 214-7008, 214-7009 CAB AR-ENCLOSED ROPS AN ATTACHMENT**

**SMCS-7306** **i02003671**

| NOTE | REF NO | GRAPHIC REF | PART NUMBER | QTY | PART NAME 1 2 3 4 5 6 (PRODUCT LEVEL) | SEE PAGE |
|---|---|---|---|---|---|---|
| | 1 | 1 | **3S-2093** | 2 | STRAP-CABLE | |
| | 2 | 1 | **112-9450** | 1 | PLATE | |
| | 3 | 1 | **9R-3469** | 2 | DIAPHRAGM | |
| | 4 | 1 | **121-6936** | 2 | CONNECTOR | |
| | 5 | 1 | **123-8670** | 1 | TANK AS | |
| | 6 | 1 | **131-1368** | 1 | HARNESS AS-WINDOW WIPER | |
| | | 1 | **102-8803** | 1 | KIT-RECEPTACLE (3-PIN) | |
| | | | | | (KIT SERVICES RECEPTACLE AS AND WEDGE) | |
| | 7 | 1 | **168-9906** | 1 | BRACKET | |
| | 8 | 1 | **186-0817** | 1 | WASHER-HARD (7X19X2MM THK) (7X19X2MM THK) | |
| M | 9 | 1 | **129-3178** | 1 | LOCKNUT (M6X1 THD) | |
| B | 10 | 1 | **8T-4121** | 2 | WASHER-HARD (11X21X2.5MM THK) | |
| | 11 | 1 | **7X-7729** | 1 | WASHER (11X25X3MM THK) | |
| M | 12 | 1 | **8T-4201** | 2 | BOLT-LOCKING (M10X1.5X20MM) | |
| | 13 | 1 | **8T-4205** | 1 | WASHER-HARD (7.2X14.5X2MM THK) | |
| M | 14 | 1 | **8T-4971** | 1 | BOLT (M6X1X30MM) | |
| E | 16 | 1 | **144-0195** | | HOSE (226CM) | |
| E | 17 | 1 | **144-0195** | 2 | HOSE (15CM) | |
| | 18 | 1 | **8T-0789** | 1 | CLIP-HOSE | |
| | 19 | 1 | **8T-1118** | 1 | NOZZLE AS | |

B-USE AS REQUIRED
E-ORDER BY THE CENTIMETER
M-METRIC PART

*167-8187* **WASHER GP-WINDOW** *(contd.)* **i02003671**

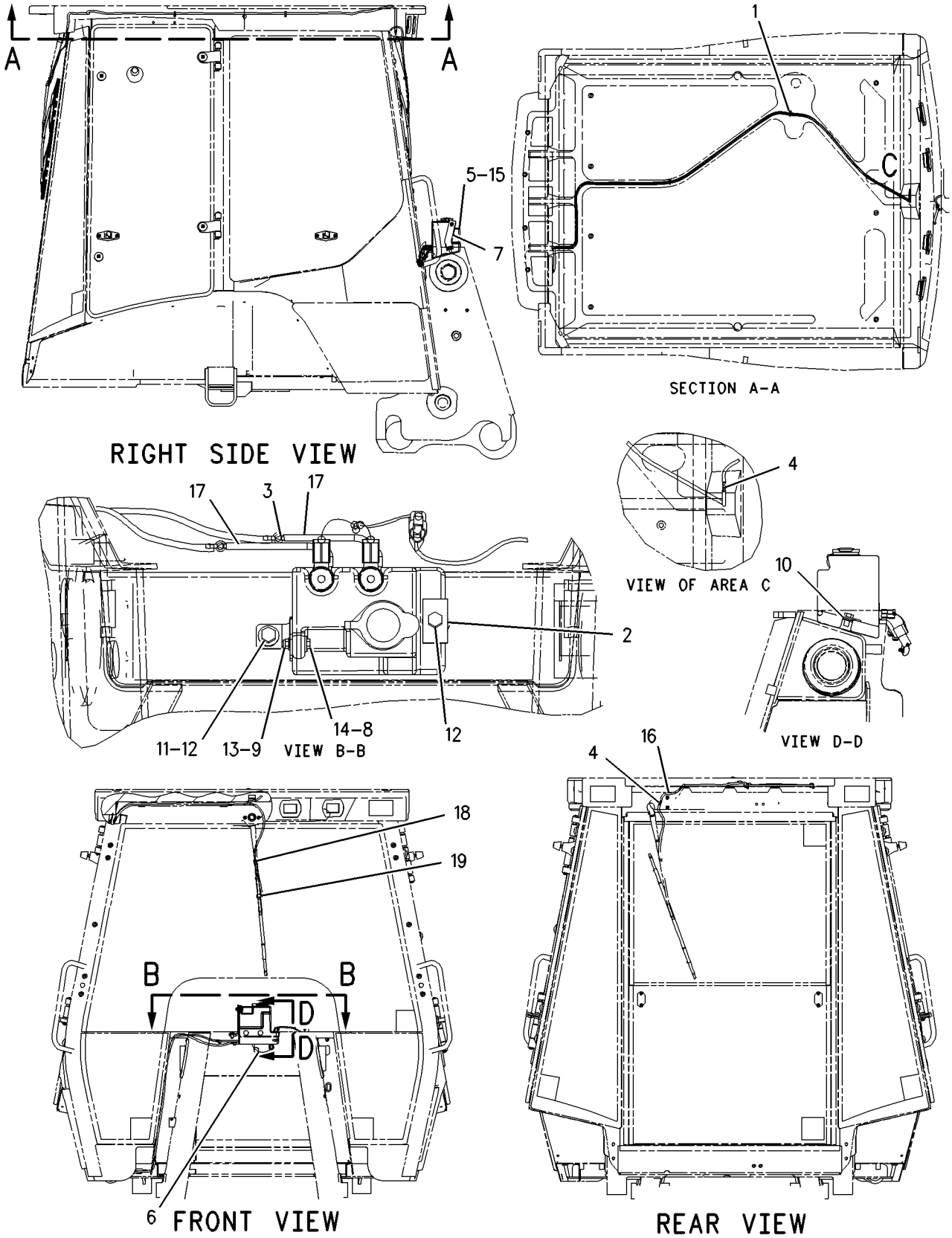


GRAPHIC #1 **<END>** g00776687

# OPERATOR STATION

## *164-1059* WINDOW GP-CAB—RH

**S/N: BXC1-UP; DSX1-UP**
**PART OF 164-1100 CAB GP**
**AN ATTACHMENT**

**SMCS-7310** **i02005731**

| NOTE | REF NO | GRAPHIC REF | PART NUMBER | QTY | PART NAME 1 2 3 4 5 6 (PRODUCT LEVEL) | SEE PAGE |
|---|---|---|---|---|---|---|
| | 1 | 1 | **7X-2393** | 1 | BUMPER-CONICAL | |
| | 2 | 1 | **8Y-7309** | 1 | RETAINER | |
| | 3 | 1 | **100-7608** | 1 | HANDLE | |
| | 4 | 1 | **129-8542** | 6 | RETAINER | |
| | 5 | 1 | **129-8545** | 8 | WASHER (13X40X3MM THK) | |
| M | 6 | 1 | **136-4192** | 4 | BOLT (M6X1.0X35MM) | |
| | 7 | 1 | **143-2830** | 1 | LATCH AS | |
| M | | 1 | **6V-7743** | 2 | LOCKNUT (M6X1 THD) | |
| M | | 1 | **9X-2045** | 2 | SCREW-TRUSS HEAD (M6X1X20MM) | |
| | | 1 | **143-2827** | 1 | SPRING | |
| | 8 | 1 | **154-5423** | 2 | SPACER (6.6X12.7X17MM THK) | |
| | 9 | 1 | **154-5424** | 2 | HINGE | |
| | 10 | 1 | **159-4951** | 2 | LATCH AS | |
| M | | 1 | **5C-2874** | 2 | NUT (M5X.8 THD) | |
| M | | 1 | **161-6984** | 2 | SCREW-TRUSS HEAD (M5X0.8X20MM) | |
| | | 1 | **161-6987** | 2 | WASHER-HARD (5.2X16X1.5MM THK) | |
| | | 1 | **161-9294** | 2 | SPRING-FLAT WIRE | |
| M | | 1 | **162-6556** | 2 | LOCKNUT | |
| | 11 | 1 | **164-1064** | 1 | GLASS-RH | |
| M | 12 | 1 | **5C-7261** | 1 | NUT (M8X1.25 THD) | |
| M | 13 | 1 | **6V-7743** | 2 | LOCKNUT (M6X1 THD) | |
| E | 14 | 1 | **148-5353** | | SEAL (378CM) | |

E-ORDER BY THE CENTIMETER
M-METRIC PART

*164-1059* **WINDOW GP-CAB** *(contd.)* **i02005731**

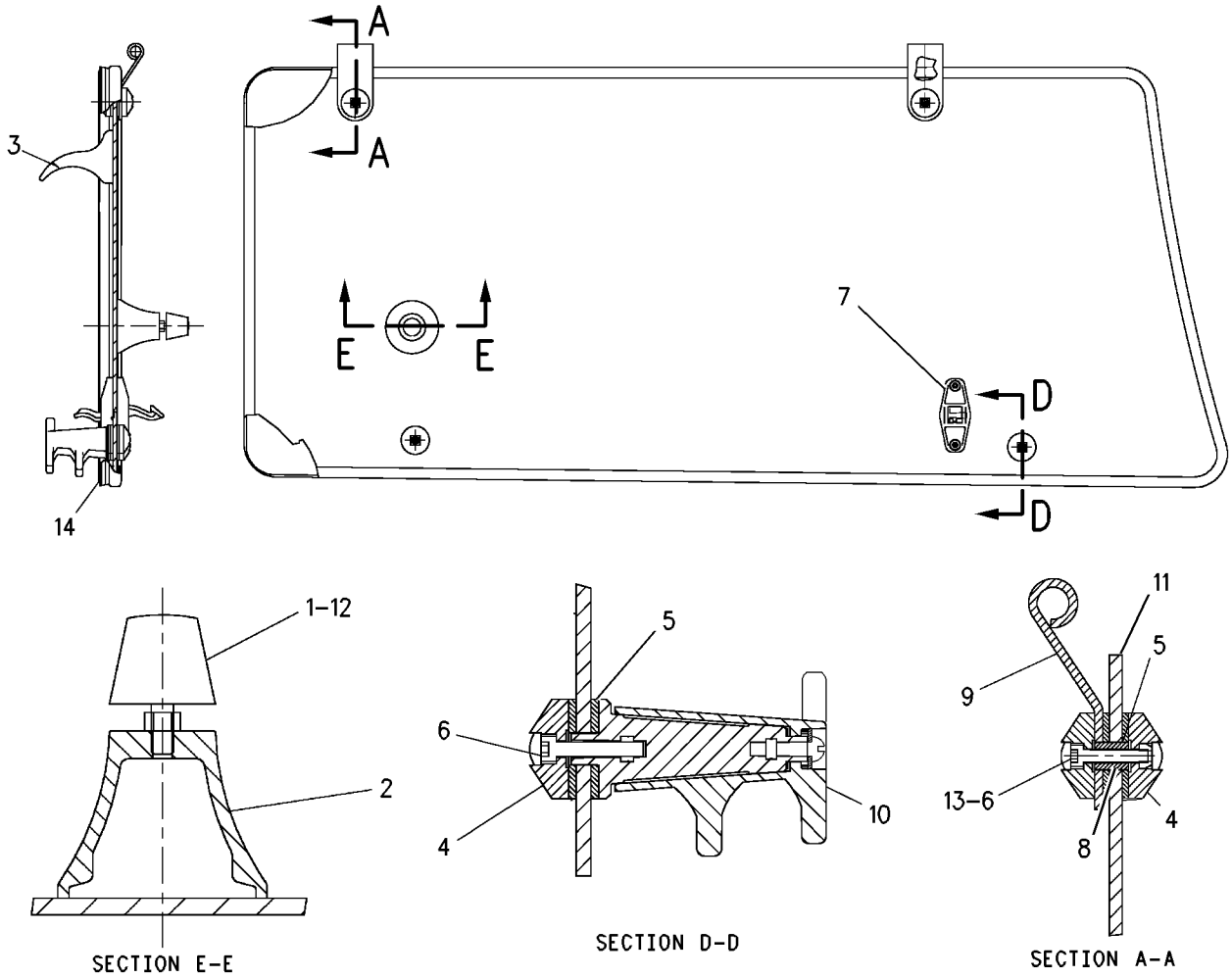


GRAPHIC #1 **<END>** g00725900

# OPERATOR STATION

## *164-1060* WINDOW GP-CAB—LH

**S/N: BXC1-UP; DSX1-UP**
**PART OF 164-1100 CAB GP**
**AN ATTACHMENT**

**SMCS-7310** **i02005732**

| NOTE | REF NO | GRAPHIC REF | PART NUMBER | QTY | PART NAME 1 2 3 4 5 6 (PRODUCT LEVEL) | SEE PAGE |
|---|---|---|---|---|---|---|
| | 1 | 1 | **7X-2393** | 1 | BUMPER-CONICAL | |
| | 2 | 1 | **8Y-7309** | 1 | RETAINER | |
| | 3 | 1 | **100-7608** | 1 | HANDLE | |
| | 4 | 1 | **129-8542** | 6 | RETAINER | |
| | 5 | 1 | **129-8545** | 8 | WASHER (13X40X3MM THK) | |
| M | 6 | 1 | **136-4192** | 4 | BOLT (M6X1.0X35MM) | |
| | 7 | 1 | **143-2830** | 1 | LATCH AS | |
| M | | 1 | **6V-7743** | 2 | LOCKNUT (M6X1 THD) | |
| M | | 1 | **9X-2045** | 2 | SCREW-TRUSS HEAD (M6X1X20MM) | |
| | | 1 | **143-2827** | 1 | SPRING | |
| | 8 | 1 | **154-5423** | 2 | SPACER (6.6X12.7X17MM THK) | |
| | 9 | 1 | **154-5424** | 2 | HINGE | |
| | 10 | 1 | **159-4950** | 2 | LATCH AS | |
| M | | 1 | **5C-2874** | 2 | NUT (M5X.8 THD) | |
| M | | 1 | **161-6984** | 2 | SCREW-TRUSS HEAD (M5X0.8X20MM) | |
| | | 1 | **161-6987** | 2 | WASHER-HARD (5.2X16X1.5MM THK) | |
| | | 1 | **161-9294** | 2 | SPRING-FLAT WIRE | |
| M | | 1 | **162-6556** | 2 | LOCKNUT | |
| | 11 | 1 | **164-1065** | 1 | GLASS-LH | |
| M | 12 | 1 | **5C-7261** | 1 | NUT (M8X1.25 THD) | |
| M | 13 | 1 | **6V-7743** | 2 | LOCKNUT (M6X1 THD) | |
| E | 14 | 1 | **148-5353** | | SEAL (378CM) | |

E-ORDER BY THE CENTIMETER
M-METRIC PART

*164-1060* **WINDOW GP-CAB** *(contd.)* **i02005732**

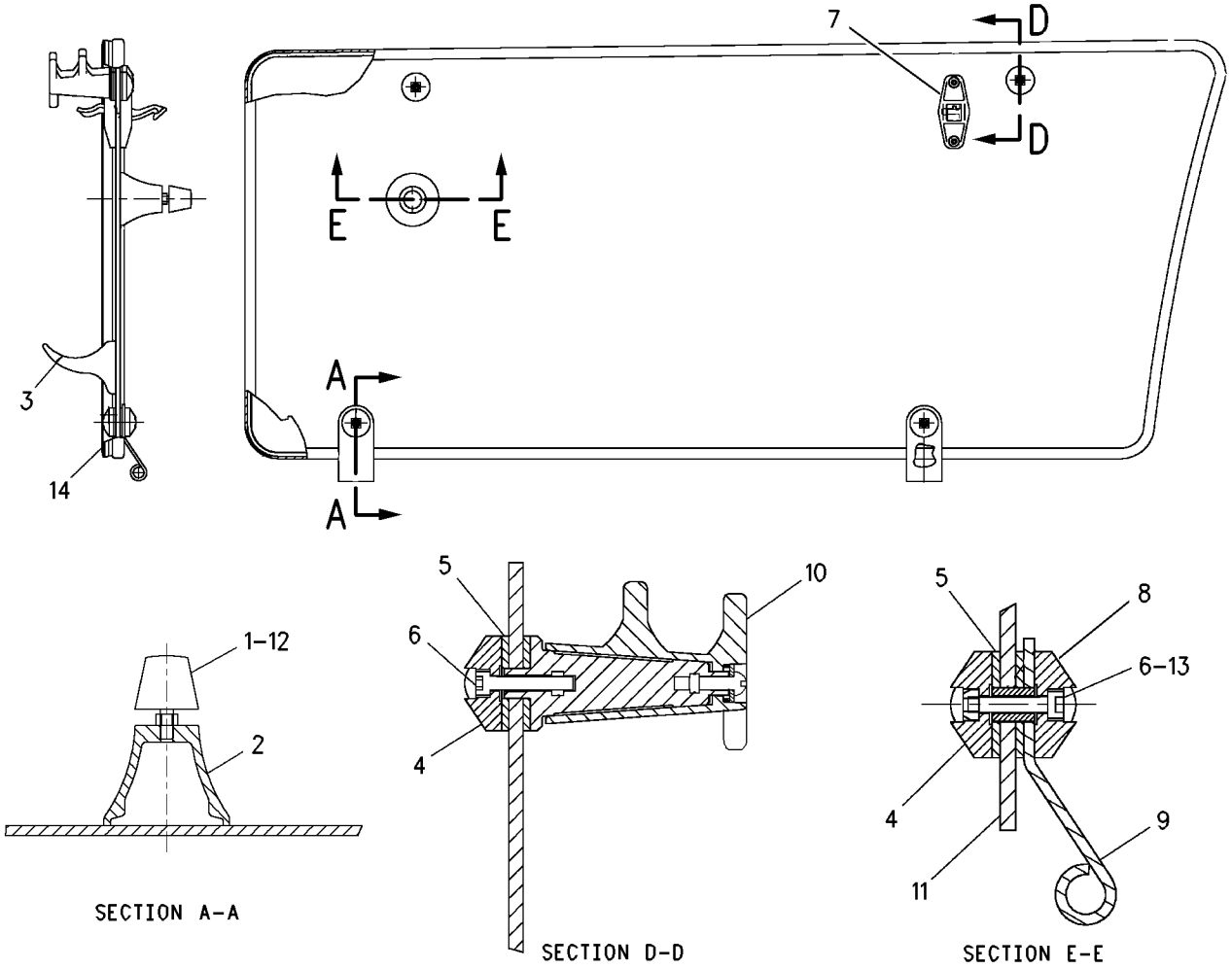


GRAPHIC #1 **<END>** g00725887

# OPERATOR STATION

## *164-1300* WINDOW GP-CAB—REAR

**S/N: BXC1-UP; DSX1-UP**
**PART OF 164-1100, 226-9095 CAB GP**
**AN ATTACHMENT**

**SMCS-7310** **i01596125**

| NOTE | REF NO | GRAPHIC REF | PART NUMBER | QTY | PART NAME 1 2 3 4 5 6 (PRODUCT LEVEL) | SEE PAGE |
|---|---|---|---|---|---|---|
| | 1 | 1 | **110-5602** | 2 | KNOB | |
| M | 2 | 1 | **131-8203** | 4 | SCREW-FLAT HEAD | |
| | 3 | 1 | **140-9921** | 2 | INSERT-THREADED | |
| | 4 | 1 | **146-7744** | 1 | KIT-LATCH (RH) | |
| | 5 | 1 | **146-7745** | 1 | KIT-LATCH (LH) | |
| | 6 | 1 | **150-8015** | 2 | GASKET | |
| | 7 | 1 | **164-1304** | 1 | GLASS | |
| | 8 | 1 | **164-1308** | 2 | ROLLER | |
| | 9 | 1 | **164-1311** | 1 | LINKAGE AS | |
| | 10 | 1 | **164-1317** | 1 | FRAME AS | |
| | | 1 | **140-9921** | 4 | INSERT-THREADED | |
| | 11 | 1 | **164-1328** | 2 | SPRING AS-GAS | |
| | 12 | 1 | **164-1342** | 4 | BOLT | |
| | 13 | 1 | **164-1343** | 4 | WASHER-THRUST | |
| | 14 | 1 | **164-1344** | 4 | WASHER-THRUST | |
| | 15 | 1 | **164-1345** | 4 | BEARING | |
| | 16 | 1 | **164-1346** | 4 | STRIKER | |
| | 17 | 1 | **164-1348** | 1 | WINDOW AS | |
| | | 1 | **164-1303** | 1 | GLASS | |
| | | 1 | **164-1316** | 1 | FRAME AS | |
| | 18 | 1 | **164-1351** | 2 | PIN | |
| | 19 | 1 | **164-1352** | 1 | LATCH AS | |
| | 20 | 1 | **164-1353** | 1 | LATCH AS | |
| | 21 | 1 | **167-8182** | 2 | BUMPER | |
| | 22 | 1 | **171-2870** | 2 | SPACER | |
| B | 23 | 1 | **201-9465** | 4 | SHIM | |
| | 24 | 1 | **205-7536** | 1 | BRACKET AS-LH | |
| | 25 | 1 | **205-7538** | 1 | BRACKET AS-RH | |
| | 26 | 1 | **119-8349** | 2 | CAP | |
| | 27 | 1 | **121-9743** | 1 | SEAL | |
| M | 28 | 1 | **129-3180** | 4 | LOCKNUT (M12X1.75 THD) | |
| | 29 | 1 | **5P-4115** | 6 | WASHER-HARD (7.2X19X2MM THK) | |
| | 30 | 1 | **5P-4116** | 4 | WASHER-HARD (8.8X20.5X2MM THK) | |
| M | 31 | 1 | **8T-4138** | 2 | BOLT (M6X1X20MM) | |
| M | 32 | 1 | **8T-4200** | 4 | BOLT (M8X1.25X16MM) | |
| | 33 | 1 | **8T-4223** | 4 | WASHER-HARD (13.5X25.5X3MM THK) | |
| M | 34 | 1 | **9X-2044** | 4 | SCREW-TRUSS HEAD (M6X1X16MM) | |
| | 35 | 1 | **9X-2132** | 4 | RETAINER | |
| E | 36 | 1 | **164-1354** | | CHANNEL-WINDOW (86.6CM) | |
| D | 37 | 1 | **5P-5637** | | SEAL (0.85M) | |
| E | 38 | 1 | **9X-6383** | | SEAL (85CM) | |
| E | 39 | 1 | **164-1314** | 2 | SEAL-LAMP (148.5CM) | |
| E | 40 | 1 | **164-1354** | 2 | CHANNEL-WINDOW (95.4CM) | |
| E | 41 | 1 | **164-1354** | 2 | CHANNEL-WINDOW (50.9CM) | |

B-USE AS REQUIRED
D-ORDER BY THE METER
E-ORDER BY THE CENTIMETER
M-METRIC PART

*164-1300* **WINDOW GP-CAB** *(contd.)* **i01596125**

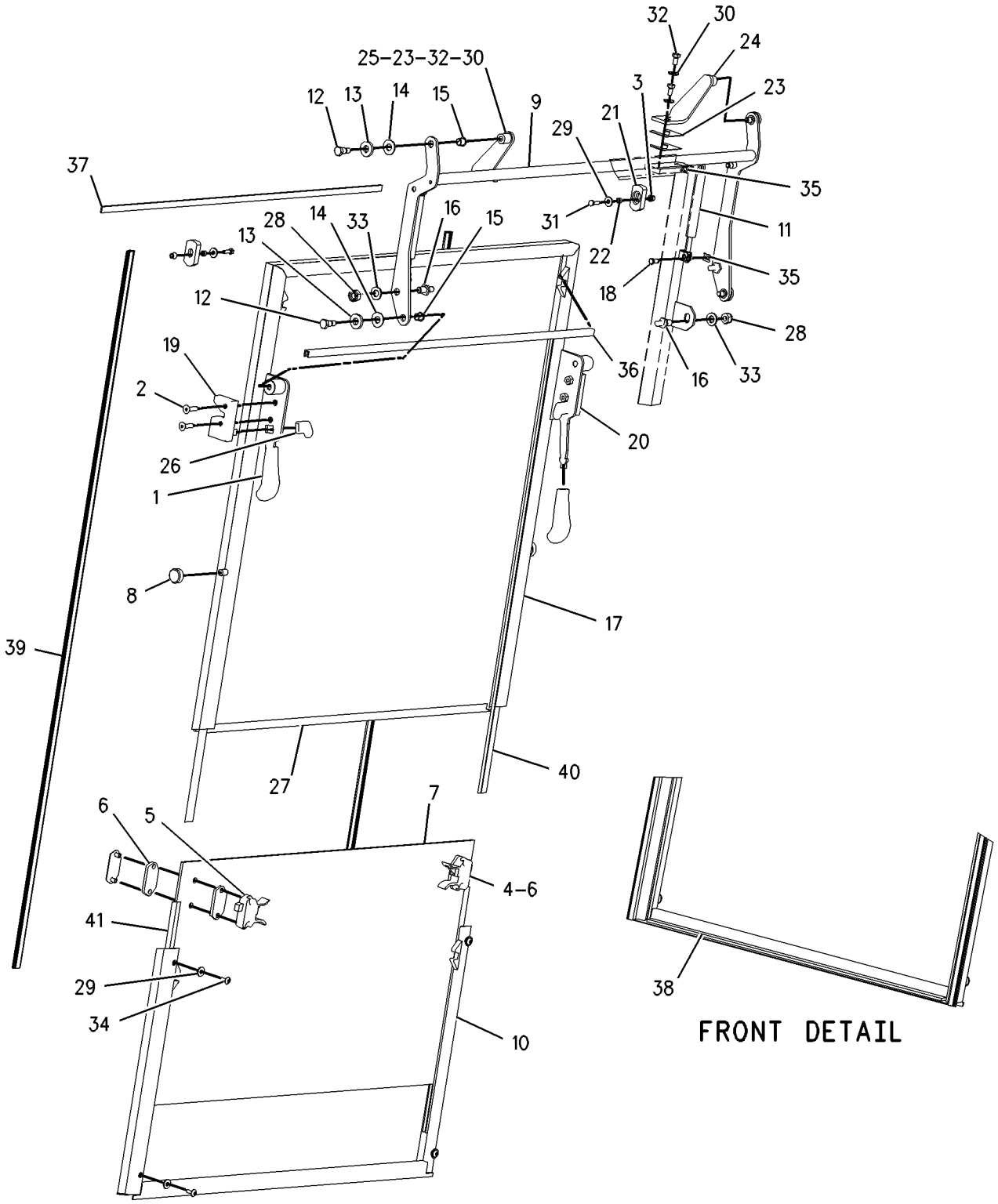


GRAPHIC #1 **<END>** g00827257

# OPERATOR STATION

## 164-1073 WINDOW GP-DOOR–RH

**S/N: BXC1-UP; DSX1-UP**
**PART OF 164-1061 DOOR GP-RH**
**AN ATTACHMENT**

**SMCS-7308, 7310** **i01706405**

| NOTE | REF NO | GRAPHIC REF | PART NUMBER | QTY | PART NAME 1 2 3 4 5 6 (PRODUCT LEVEL) | SEE PAGE |
|---|---|---|---|---|---|---|
| | 1 | 1 | **8Y-7287** | 2 | HINGE | |
| | 2 | 1 | **100-7608** | 1 | HANDLE | |
| | 3 | 1 | **129-8542** | 5 | RETAINER | |
| | 4 | 1 | **129-8543** | 2 | SPACER (16MM THK) | |
| | 5 | 1 | **129-8545** | 6 | WASHER (3MM THK) | |
| M | 6 | 1 | **136-4192** | 3 | BOLT (M6X1.0X35MM) | |
| | 7 | 1 | **143-2830** | 1 | LATCH AS | |
| M | | 1 | **6V-7743** | 2 | LOCKNUT (M6X1 THD) | |
| M | | 1 | **9X-2045** | 2 | SCREW-TRUSS HEAD (M6X1X20MM) | |
| | | 1 | **143-2827** | 1 | SPRING | |
| | 8 | 1 | **159-4950** | 1 | LATCH AS | |
| M | | 1 | **5C-2874** | 1 | NUT (M5X.8 THD) | |
| M | | 1 | **161-6984** | 1 | SCREW-TRUSS HEAD (M5X0.8X20MM) | |
| | | 1 | **161-6987** | 1 | WASHER-HARD | |
| | | 1 | **161-9294** | 1 | SPRING-FLAT WIRE | |
| M | | 1 | **162-6556** | 1 | LOCKNUT | |
| | 9 | 1 | **164-1066** | 1 | GLASS | |
| M | 10 | 1 | **6V-7743** | 2 | LOCKNUT (M6X1 THD) | |
| E | 11 | 1 | **148-5353** | | SEAL (342CM) | |

E-ORDER BY THE CENTIMETER
M-METRIC PART

**164-1073 WINDOW GP-DOOR** *(contd. )* **i01706405**

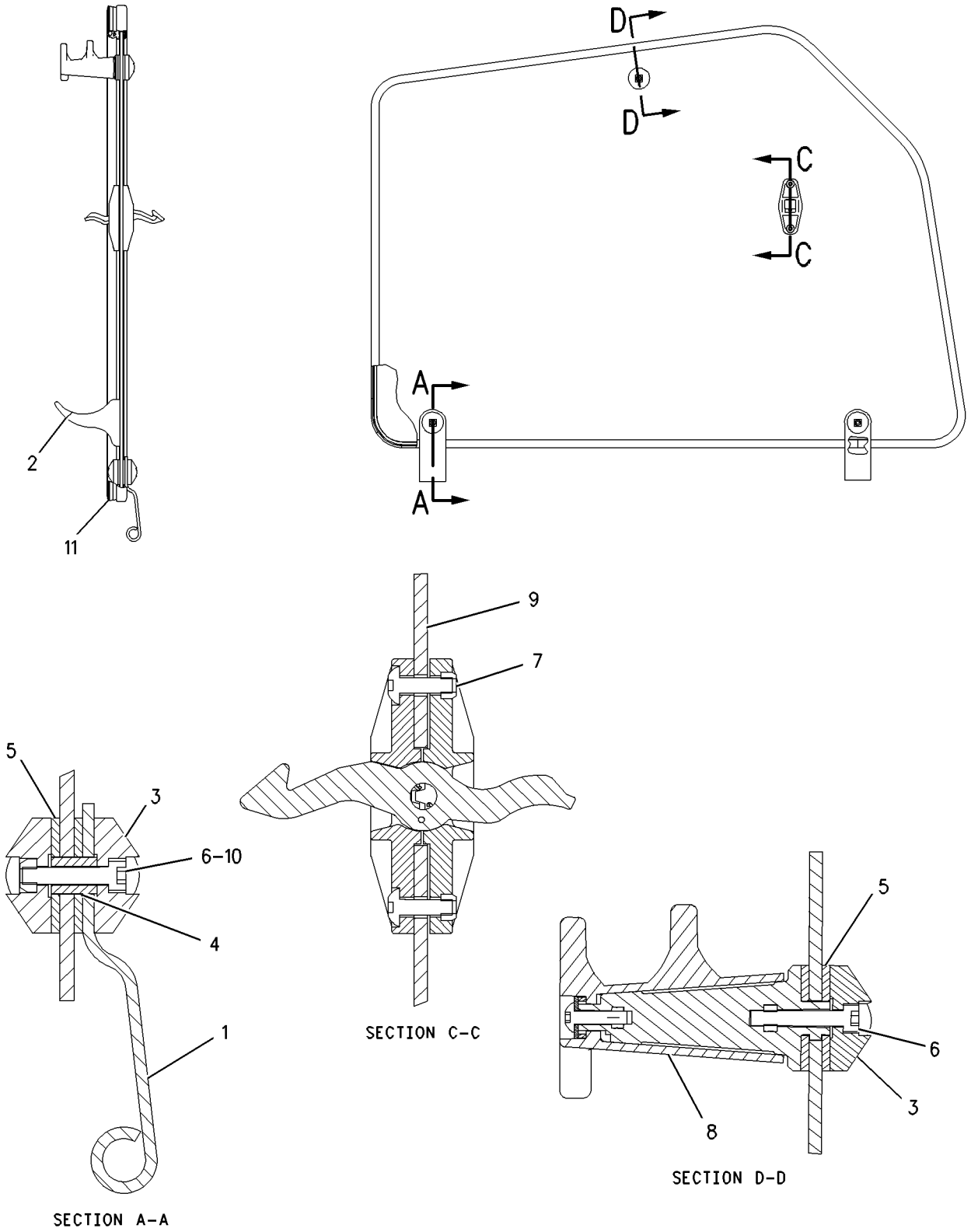


GRAPHIC #1 **<END>** g00878022

# OPERATOR STATION

## 164-1074 WINDOW GP-DOOR—LH

**S/N: BXC1-UP; DSX1-UP**
**LEFT HAND**
**PART OF 164-1062 DOOR GP-LH**
**AN ATTACHMENT**

**SMCS-7308, 7310** **i01706420**

| NOTE | REF NO | GRAPHIC REF | PART NUMBER | QTY | PART NAME 1 2 3 4 5 6 (PRODUCT LEVEL) | SEE PAGE |
|---|---|---|---|---|---|---|
| | 1 | 1 | **8Y-7287** | 2 | HINGE | |
| | 2 | 1 | **100-7608** | 1 | HANDLE | |
| | 3 | 1 | **129-8542** | 5 | RETAINER | |
| | 4 | 1 | **129-8543** | 2 | SPACER (16MM THK) | |
| | 5 | 1 | **129-8545** | 6 | WASHER (3MM THK) | |
| M | 6 | 1 | **136-4192** | 3 | BOLT (M6X1.0X35MM) | |
| | 7 | 1 | **143-2830** | 1 | LATCH AS | |
| M | | 1 | **6V-7743** | 2 | LOCKNUT (M6X1 THD) | |
| M | | 1 | **9X-2045** | 2 | SCREW-TRUSS HEAD (M6X1X20MM) | |
| | | 1 | **143-2827** | 1 | SPRING | |
| | 8 | 1 | **159-4951** | 1 | LATCH AS | |
| M | | 1 | **5C-2874** | 1 | NUT (M5X.8 THD) | |
| M | | 1 | **161-6984** | 1 | SCREW-TRUSS HEAD (M5X0.8X20MM) | |
| | | 1 | **161-6987** | 1 | WASHER-HARD | |
| | | 1 | **161-9294** | 1 | SPRING-FLAT WIRE | |
| M | | 1 | **162-6556** | 1 | LOCKNUT | |
| | 9 | 1 | **164-1067** | 1 | GLASS | |
| M | 10 | 1 | **6V-7743** | 2 | LOCKNUT (M6X1 THD) | |
| E | 11 | 1 | **148-5353** | | SEAL (342CM) | |

E-ORDER BY THE CENTIMETER
M-METRIC PART

**164-1074 WINDOW GP-DOOR** *(contd. )* **i01706420**

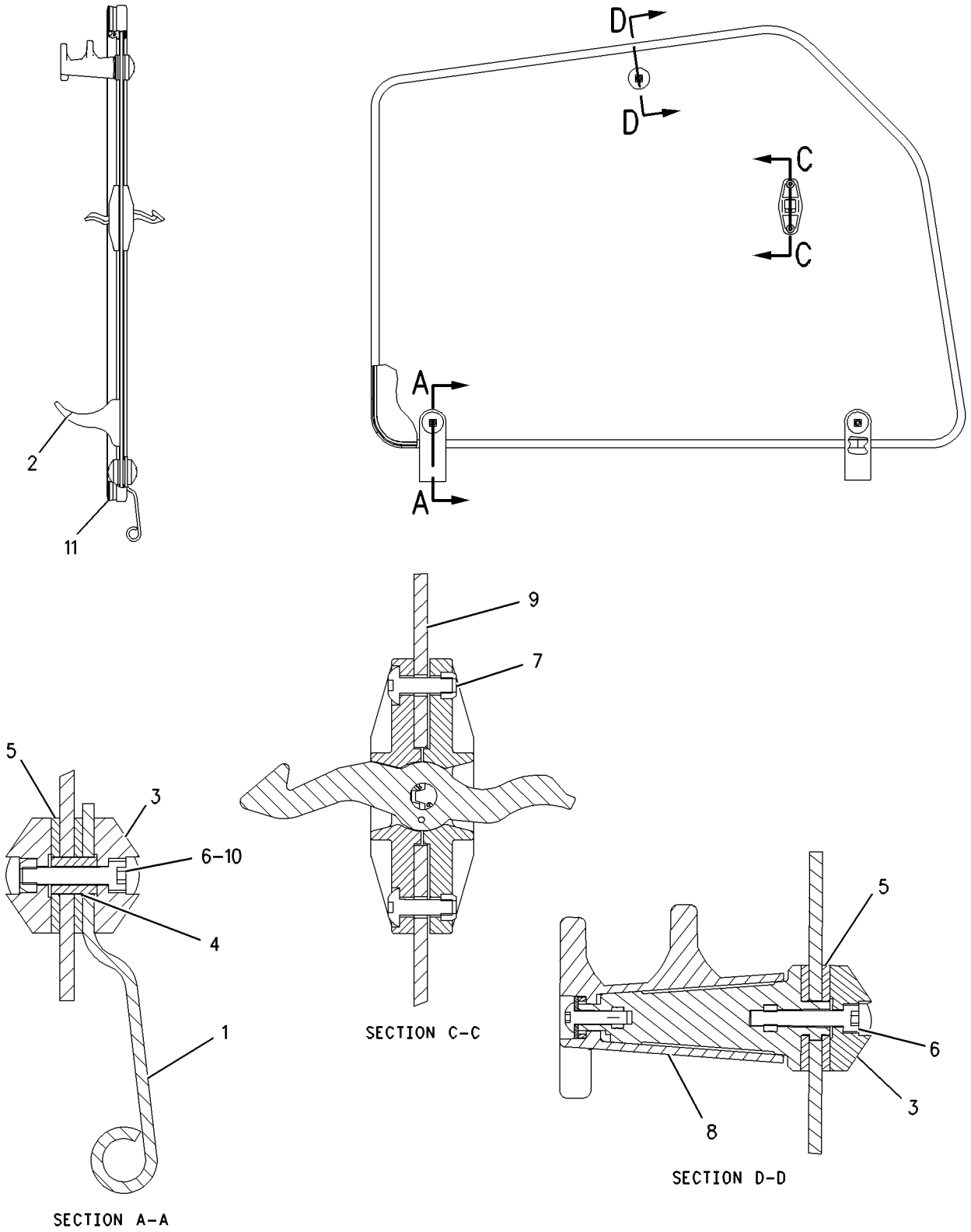


GRAPHIC #1 **<END>** g00878022

# OPERATOR STATION

## *174-2024* WIPER GP-WINDOW

**S/N: BXC1-UP; DSX1-UP**

**PART OF 214-7006, 214-7007 CAB AR, 214-7008, 214-7009 CAB AR-ENCLOSED ROPS AN ATTACHMENT**

**SMCS-7305** **i01674631**

| NOTE | REF NO | GRAPHIC REF | PART NUMBER | QTY | PART NAME 1 2 3 4 5 6 (PRODUCT LEVEL) | SEE PAGE |
|---|---|---|---|---|---|---|
| | 1 | 1 | **6K-0806** | 1 | STRAP-CABLE | |
| M | 2 | 1 | **8T-4970** | 5 | BOLT (M6X1X14MM) | |
| | 3 | 1 | **102-2940** | 2 | BLADE AS | |
| | | 1 | **5C-8813** | 1 | BLADE-WIPER | |
| | | 1 | **101-0745** | 1 | BLADE | |
| | 4 | 1 | **132-2249** | 2 | SPACER (24.0MM THK) | |
| | 5 | 1 | **132-2250** | 1 | SPACER (10.0MM THK) | |
| | 6 | 1 | **154-5410** | 1 | ARM AS-WIPER | |
| | 7 | 1 | **174-2025** | 1 | MOTOR GP-WINDOW WIPER | |
| | | 1 | **102-8805** | 1 | KIT-RECEPTACLE (6 PIN) | |
| | | | | | (KIT SERVICES RECEPTACLE AS. AND WEDGE) | |
| | | 1 | **186-3735** | 4 | PIN-CONNECTOR | |
| | 8 | 1 | **174-2026** | 1 | ARM AS | |
| | | 1 | **163-4759** | 1 | KIT-REPAIR | |
| E | | 1 | **194-5171** | | HOSE (33CM) | |
| | 9 | 1 | **174-5456** | 1 | PLATE | |
| Y | 10 | 1 | **186-2589** | 1 | MOTOR GP-WINDOW WIPER | 755 |
| M | 11 | 1 | **8C-8451** | 2 | BOLT (M6X1X40MM) | |
| | 12 | 1 | **8T-4205** | 7 | WASHER-HARD (7.2X14.5X2MM THK) | |

E-ORDER BY THE CENTIMETER
M-METRIC PART
Y-SEPARATE ILLUSTRATION

*174-2024* **WIPER GP-WINDOW** *(contd.)* **i01674631**

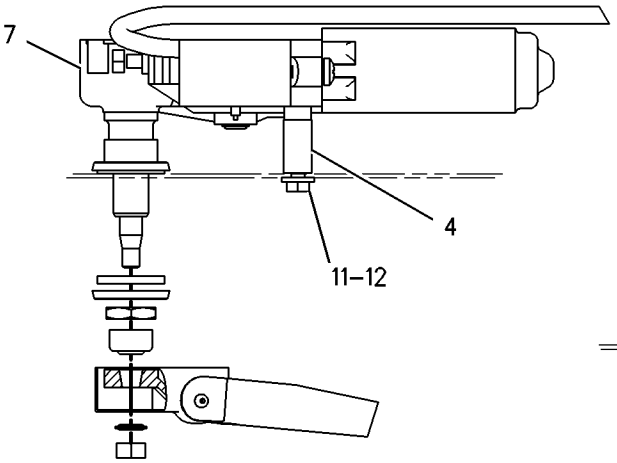


VIEW A-A

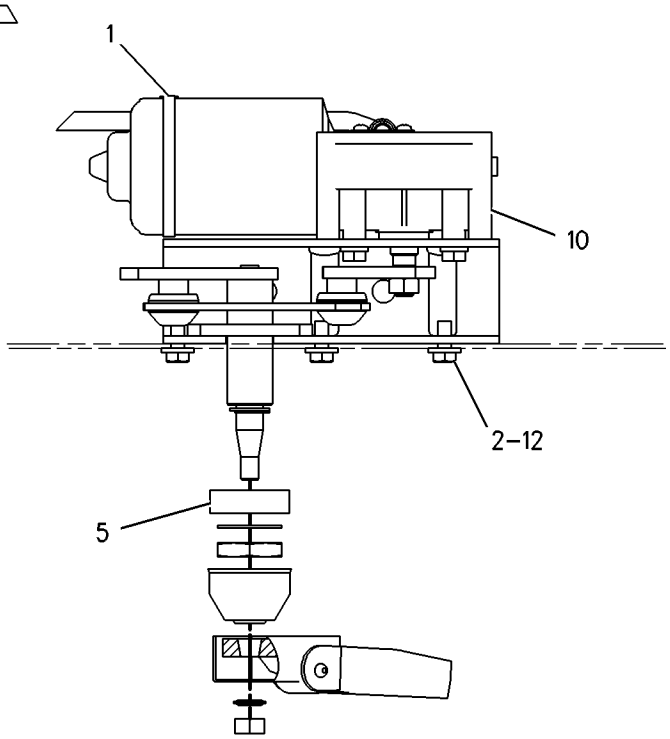


VIEW B-B

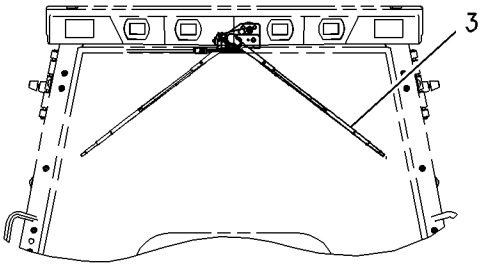


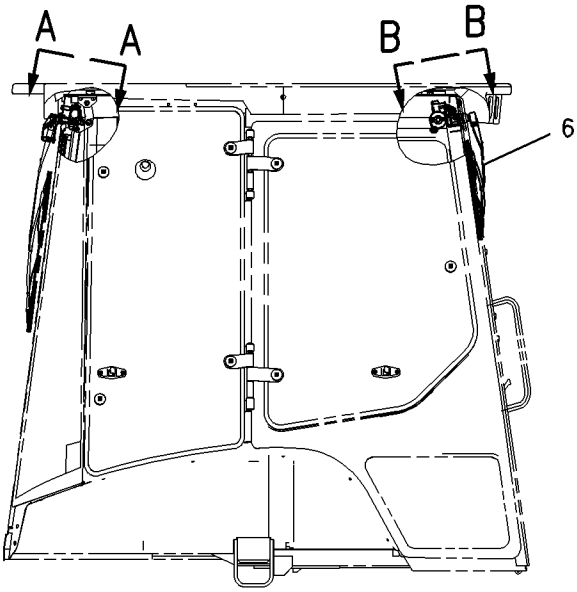


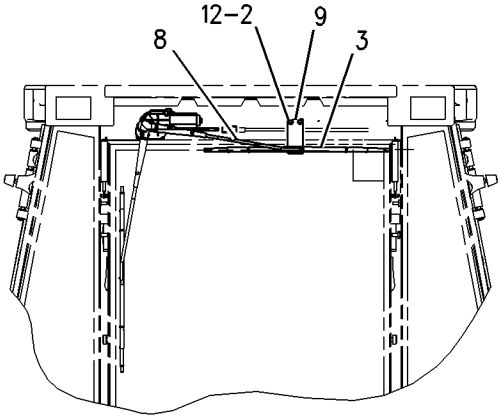


GRAPHIC #1 **<END>** g00726930

# SERVICE EQUIPMENT AND SUPPLIES

## *186-6375* FILM GP

**S/N: BXC1-UP; DSX1-UP**

**PART OF 185-7741, 185-7754 PLATE & FILM GP**

**SMCS-7405, 7557** **i02003690**

| NOTE | REF NO | GRAPHIC REF | PART NUMBER | QTY | PART NAME 1 2 3 4 5 6 (PRODUCT LEVEL) | SEE PAGE |
|---|---|---|---|---|---|---|
| | 1 | 1 | **186-5273** | 1 | FILM (428D) (RH) | |
| | 2 | 1 | **101-0003** | 8 | FASTENER | |
| | 3 | 1 | **3E-8123** | 1 | FILM-STRIPE (CAT-RH) | |
| | 4 | 1 | **3E-8124** | 1 | FILM-STRIPE (CAT-LH) | |
| | 5 | 1 | **186-5274** | 1 | FILM (428D) (LH) | |
| | | | | | | |
| AF | | 1 | **177-9600** | 2 | FILM (PREMIER) | |

A-NOT PART OF THIS GROUP
F-NOT SHOWN

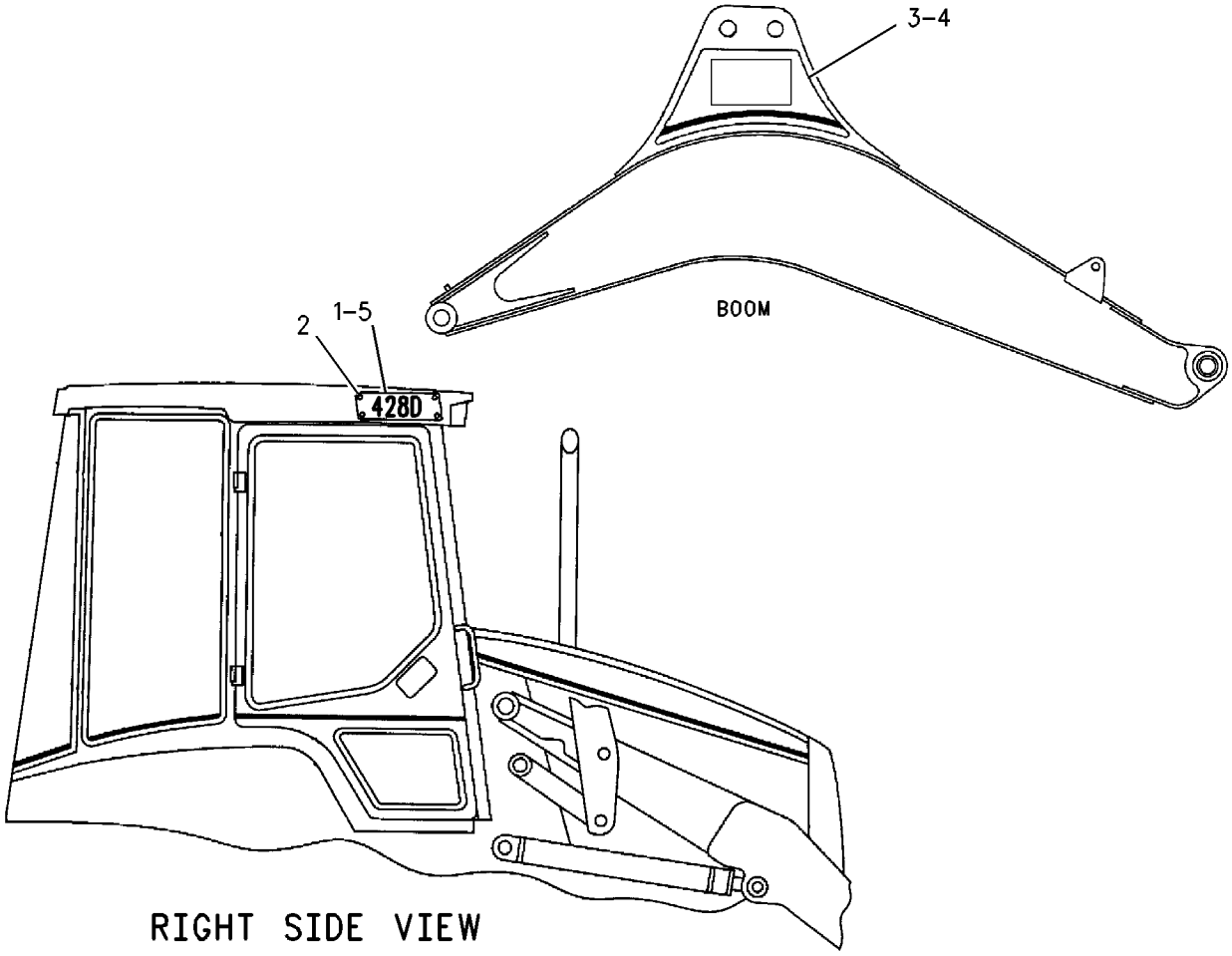


GRAPHIC #1 **<END>** g00770054

# SERVICE EQUIPMENT AND SUPPLIES

## *217-6835* FILM GP

**S/N: BXC1-UP; DSX1-UP**
**CANNOT BE USED WITH CANOPY OR DELUX CAB**
**AN ATTACHMENT**

**SMCS-7405, 7557** **i01868095**

| NOTE | PART NUMBER | QTY | PART NAME 1 2 3 4 5 6 (PRODUCT LEVEL) | SEE PAGE |
|---|---|---|---|---|
| | **110-0037** | 1 | FILM (CATERPILLAR) | |

**<END>**

# SERVICE EQUIPMENT AND SUPPLIES

## *113-0018* INSTALLATION AR-WHEEL CHOCK

**S/N: BXC1-UP; DSX1-UP**
**PART OF 206-3409, 206-4924 CONVERSION AR-CERTIFICATION**
**AN ATTACHMENT**

**SMCS-7000** **i01127632**

| NOTE | REF NO | GRAPHIC REF | PART NUMBER | QTY | PART NAME 1 2 3 4 5 6 (PRODUCT LEVEL) | SEE PAGE |
|---|---|---|---|---|---|---|
| | 1 | 1 | **114-9342** | 2 | CHOCK-WHEEL | |
| | 2 | 1 | **130-7452** | 2 | PLATE | |

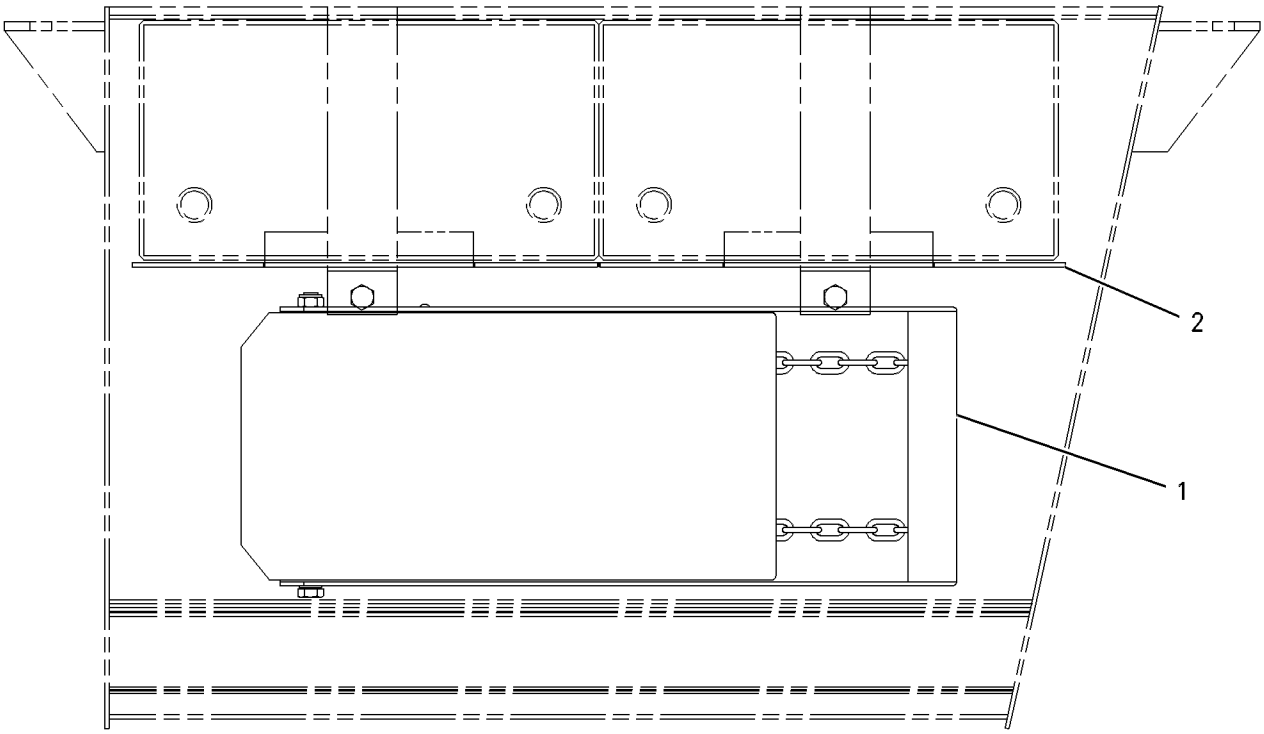


GRAPHIC #1 **<END>** g00307295

# SERVICE EQUIPMENT AND SUPPLIES

## *134-8204* LOCK GP-VANDALISM

**S/N: BXC1-UP; DSX1-UP**
**SINGLE TILT**
**AN ATTACHMENT**

**SMCS-7315** **i01810680**

| NOTE | REF NO | GRAPHIC REF | PART NUMBER | QTY | PART NAME 1 2 3 4 5 6 (PRODUCT LEVEL) | SEE PAGE |
|---|---|---|---|---|---|---|
| | 1 | 1 | **5P-8502** | 2 | PADLOCK GP | |
| | | | | | (EACH INCLUDES) | |
| | | 1 | **5P-8500** | 1 | KEY | |
| | | 1 | **8Y-6364** | 1 | SLEEVE | |

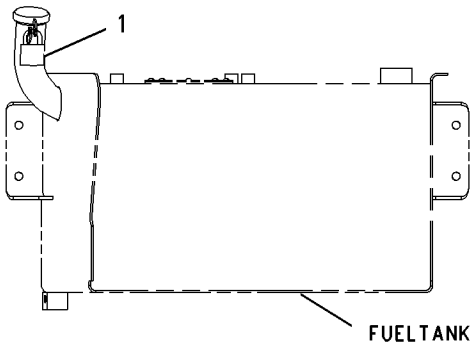


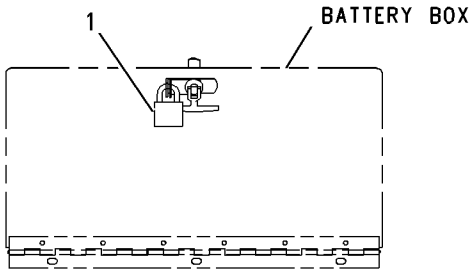


GRAPHIC #1 **<END>** g00925642

# SERVICE EQUIPMENT AND SUPPLIES

## *135-2567* LOCK GP-VANDALISM—PARALLEL LIFT

**S/N: BXC1-UP; DSX1-UP**

**AN ATTACHMENT**

**SMCS-7315** **i01810926**

| NOTE | REF NO | GRAPHIC REF | PART NUMBER | QTY | PART NAME 1 2 3 4 5 6 (PRODUCT LEVEL) | SEE PAGE |
|---|---|---|---|---|---|---|
| | 1 | 1 | **5P-8502** | 3 | PADLOCK GP | |
| | | | | | (EACH INCLUDES) | |
| | | 1 | **5P-8500** | 1 | KEY | |
| | | 1 | **8Y-6364** | 1 | SLEEVE | |

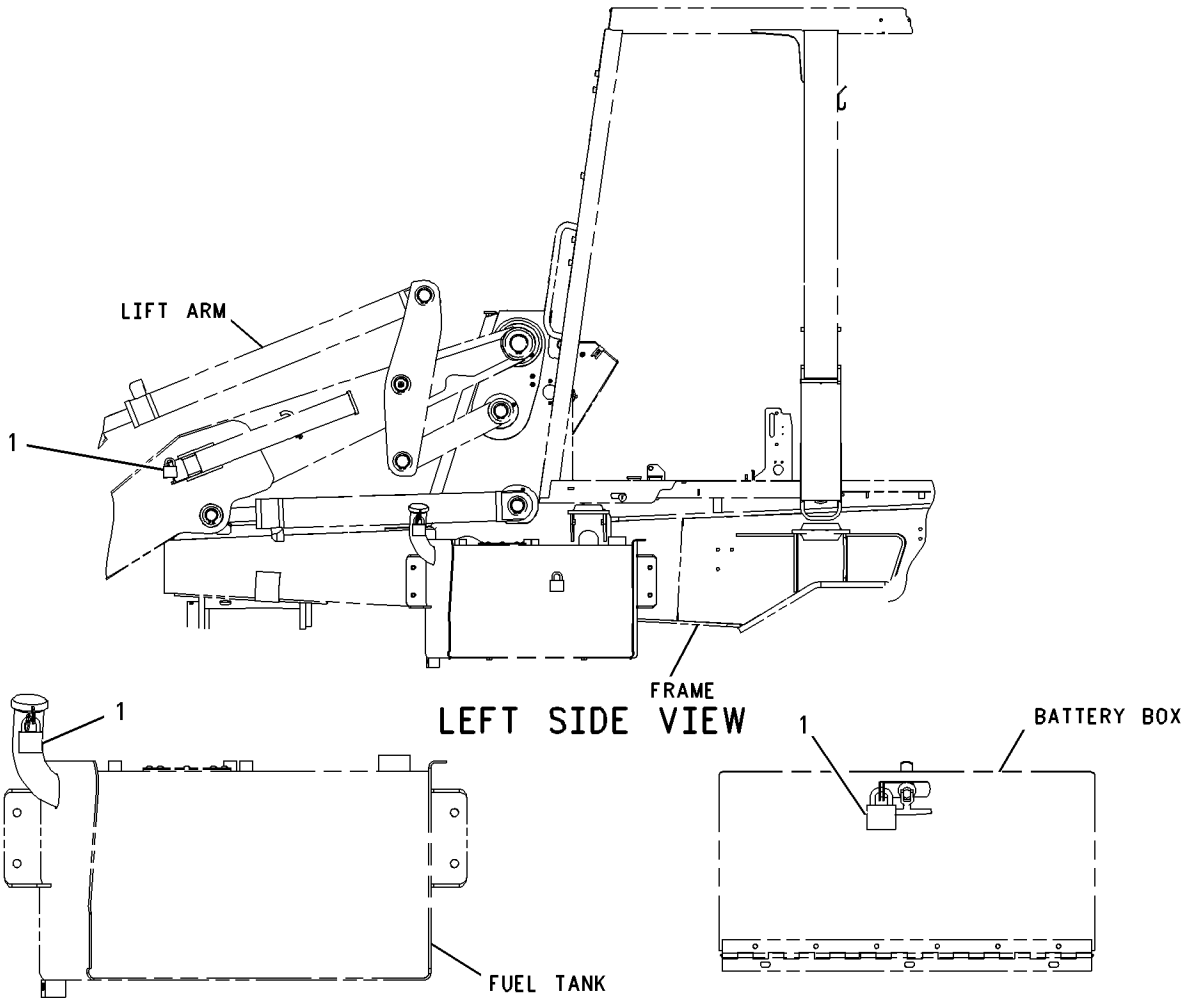


GRAPHIC #1 **<END>** g00925648

## *132-3391* PLATE & FILM GP

**S/N: BXC1-UP; DSX1-UP**
**EEC**
**AN ATTACHMENT**

**SMCS-7405** **i00987087**

| NOTE | PART NUMBER | QTY | PART NAME 1 2 3 4 5 6 (PRODUCT LEVEL) | SEE PAGE |
|---|---|---|---|---|
| | **132-3392** | 1 | FORM-CERTIFICATION | |
| | *103-2532* | 1 | PLATE GP-CERTIFICATION (MACHINE) | |
| | **4B-4158** | 1 | SCREW-DRIVE | |
| | **082-2817** | 4 | TACK | |
| | **9X-6562** | 4 | TACK-FASTENER | |

**<END>**

## *185-7741* PLATE & FILM GP

**S/N: BXC1-UP**
**PARALLEL LIFT, ALL WHEEL DRIVE**
**PART OF 237-9288 CHASSIS AR**

**SMCS-7405** **i01397724**

| NOTE | PART NUMBER | QTY | PART NAME 1 2 3 4 5 6 (PRODUCT LEVEL) | SEE PAGE |
|---|---|---|---|---|
| Y | *186-6375* | 1 | FILM GP | 799 |
| | **1P-2807** | 2 | FILM-LIFT | |
| | | | (LOCATE ON FRONT SIDE OF FRONT AXLE) | |
| | **7X-3229** | 2 | FILM-LIFT & TIE DOWN | |
| | | | (LOCATE ON TIEDOWN/SLING EYE BRACKET) | |
| | **7X-7644** | 2 | FILM-TIE DOWN | |
| | | | (LOCATE ON FRONT AXLE SUPPORT PLATE) | |
| | **130-5581** | 1 | FILM-WARNING | |
| | | | (LOCATE ON LH LOADER ARM) | |
| | **126-5704** | 4 | SHIM (1MM THK) | |
| | | | (LOCATED IN BAG IN SIDE CONSOLE) | |

Y-SEPARATE ILLUSTRATION

**<END>**

# SERVICE EQUIPMENT AND SUPPLIES

## *185-7754* PLATE & FILM GP

**S/N: DSX1-UP**
**ALL WHEEL DRIVE, NARROW FRAME, PARALLEL LIFT**
**PART OF 237-9289 CHASSIS AR**

**SMCS-7405** **i01454241**

| NOTE | PART NUMBER | QTY | PART NAME 1 2 3 4 5 6 (PRODUCT LEVEL) | SEE PAGE |
|---|---|---|---|---|
| Y | *186-6375* | 1 | FILM GP | 799 |
| | **1P-2807** | 2 | FILM (LIFT EYE LOCATION) | |
| | | | (LOCATE ON FRONT SIDE OF FRONT AXLE) | |
| | **7X-3229** | 2 | FILM-LIFT & TIE DOWN | |
| | | | (LOCATE ON TIEDOWN/SLING EYE BRACKET) | |
| | **7X-7644** | 2 | FILM-TIE DOWN | |
| | | | (LOCATE ON FRONT AXLE SUPPORT PLATE) | |
| | **130-5581** | 1 | FILM-WARNING | |
| | | | (LOCATE ON LH LOADER ARM) | |
| | **126-5704** | 4 | SHIM (1MM THK) | |
| | | | (LOCATED IN BAG IN SIDE CONSOLE) | |
| Y-SEPARATE ILLUSTRATION | | | | |

**<END>**

## *238-6700* PLATE & FILM GP

**S/N: BXC1-UP; DSX1-UP**
**PART OF 237-9288, 237-9289 CHASSIS AR**

**SMCS-7405** **i01994380**

| NOTE | PART NUMBER | QTY | PART NAME 1 2 3 4 5 6 (PRODUCT LEVEL) | SEE PAGE |
|---|---|---|---|---|
| | **1P-2807** | 4 | FILM (LIFT EYE LOCATION) | |
| | | | ON THE FRONT SIDE OF THE FRONT AXLE BETWEEN CHASSIS & WHEEL AS. ON LH & RH SIDE OF MACHINE. | |
| | **7X-7644** | 4 | FILM (TIE DOWN) | |
| | | | ON EACH SIDE OF THE MACHINE ON THE MAIN FRAME NEAR FRONT AXIL SUPPORT NEXT TO THE TIE DOWN HOLES. | |
| | **199-6245** | 1 | FILM (SEPARATOR) | |
| | | | ON SIDE OF FUEL TANK 4CM FROM BOTTOM EDGE AND 2CM FROM BACK EDGE. | |
| | **224-9855** | 1 | FILM (STARTING AID) | |
| | | | ON RIGHT HAND B-POST IN THE FOLLOWING ORDER; UNIVERSAL, SEAT BELT, QUICK COUPLER (IF EQUIPTED), & COLD START. | |
| | | | DECALS MUST BE ALIGNED AND EVENLY SPACED. | |
| | **190-5134** | 1 | FILM (STD CROSS PATTERN) | |
| | | | IN CONTROL GP - VALVE ON REAR CONSOLE FOR MECHANICAL STANDARD/CROSS BACKHOE CONTROLS. | |
| | **190-5136** | 1 | FILM (CTR PIVOT/BOOM LOCK) | |
| | | | IN MTG GP - VALVE OR STABILIZER AR. FOR CENTER PIVOT MACHINES. PLACE NEXT TO STABILIZER CONTROLES. | |
| | **190-5137** | 1 | FILM (SISHF/BOOM LOCK) | |
| | | | IN STABILIZER AR. FOR SIDE SHIFT MACHINES ON TOE RIGHT SIDE CONSOLE NEXT TO STABILIZER CONTROLE LEVERS. | |
| | **191-9104** | 1 | FILM (START SWITCH) | |
| | | | IN MTG GP, AROUND KEY SWITCH. | |
| | **190-5139** | 1 | FILM (VARIABLE SPEED) | |
| | | | IN CONTROL GP - GOV. | |
| | **190-5128** | 1 | FILM (BUCKET CONTROL) | |
| | | | IN CONTROL GP - VALVE, ON REAR CONSOLE FOR MECHANICAL EXCAVATOR BACKHOE CONTROLES. | |
| | **186-5300** | 1 | FILM (CONTROL PLATE) | |
| | | | ON B-POST CENTERED ABOVE RIGHT HAND CONSOLE. | |

## 238-6700 PLATE & FILM GP *(contd.)* i01994380

| NOTE | PART NUMBER | QTY | PART NAME 1 2 3 4 5 6 (PRODUCT LEVEL) | SEE PAGE |
|---|---|---|---|---|
| | **190-5129** | 1 | FILM (BUCKET CONTROL) | |
| | | | IN CONTROLE GP - VALVE, ON REAR CONSOLE FOR MECHANICAL CASE STYLE BACKHOE CONTROLS. | |
| | **188-0861** | 1 | FILM (INST) | |
| | | | ON LOADER CONTROL FILM CENTERED IN UPPER RH CORNER. | |
| | **198-0102** | 1 | FILM (MULTIPURPOSE BUCKET) | |
| | | | ON HYD AR WHICH ARE MECHANICAL LOADER CONTROLS. | |
| D | **9X-2334** | | FILM (BULK) (.095M) | |
| | | | ON UPPER RH LOADER ARM BOSS ALIGNED WITH BUCKET INDICATOR POITER WITH BUCKET ON LEVEL GROUND. | |
| | **190-5133** | 1 | FILM (ALL WHEEL STEER) | |
| | | | ON LOADER CONTROL FILM NEXT TO FRONT VIEW OF LOADER HANDLE. (AWS PILOT CONTROLS ONLY) | |
| | **191-9107** | 1 | FILM (ALL WHEEL STEER) | |
| | | | IN WIRING GP - STER - A. | |
| | **238-4441** | 1 | FILM (LUBRICANTS) | |
| | | | IN HOOD GP - ENG. | |
| | **238-6847** | 1 | FILM (STABILIZER CONTROL) | |
| | | | IN STABILIZER AR. FOR SIDE SHIFT MACHINES ON TOE RIGHT SIDE CONSOLE NEXT TO STABILIZER CONTROLE LEVERS. | |
| | **130-6662** | 1 | FILM-AWS | |
| | | | IN WIRING GP - STER. | |
| | **190-5132** | 1 | FILM-CONTROL (AIR CONDITIONER) | |
| | | | IN CONDITIONER GP OR HEATER GP ON THE RH CONSOLE AROUND THE TEMPERATURE CONTROL KNOB. | |
| | **101-0333** | 1 | FILM-IDENTIFICATION (HYDRAULIC OIL) | |
| | | | ON BRAKE FLUID RESERVOIR CAP. | |
| | **159-8033** | 1 | FILM-IDENTIFICATION (12 VOLTS) | |
| | | | ON INSIDE OF BATTERY BOX DOOR CENTERED ABOVE JUMP START WARNING. | |
| | **202-5710** | 1 | FILM-IDENTIFICATION (FUSE PANEL) | |
| | | | INSIDE RH CONSOLE ACCESS PANEL. | |
| | **231-9352** | 1 | FILM-IDENTIFICATION (FUSE PANEL) | |
| | | | INSIDE RH CONSOLE ACCESS PANEL. | |
| | **8C-4447** | 1 | FILM-INDICATOR | |
| | | | IN BRACE GP - LFT CYL. | |
| | **172-6224** | 1 | FILM-INDICATOR | |
| | | | IN WIRING GP - CSL. | |
| | **188-0863** | 1 | FILM-INDICATOR (416D) | |
| | | | IN WIRING GP - CSL ON RH CONSOLE. | |
| | **222-5794** | 1 | FILM-INDICATOR | |
| | | | IN WIRING GP - STANDARD. | |
| | **239-9438** | 1 | FILM-INFORMATION (CONTROL PATTERN) | |
| | | | IN LINES GP - PILOT, ON THE LH B-POST 53CM UP FROM FLANGE PLATE. | |
| | **124-2456** | 1 | FILM-INSTRUCTION (NO STEP) | |
| | | | INSIDE OF BATTERY BOX DOOR WITH BOTTOM EDGE OF DECAL 9 CM FROM TOP EDGE OF COVER & AND 7.5CM FROM RIGHT SIDE OF BOX. | |
| | **190-5130** | 1 | FILM-INSTRUCTION | |
| | | | IN CONTROL GP - VALVE ON REAR CONSOLE FOR MECHANICAL BACKHOE STANDARD CONTROLS. | |
| | **101-0863** | 1 | FILM-INSTRUCTION (RETURN FLOW) | |
| | | | IN LINES GP - AUX HYD. | |
| | **239-9435** | 1 | FILM-INSTRUCTION (LINK) | |
| | | | IN LINKAGE GP BUCKET. | |
| | **101-2788** | 1 | FILM-INSTRUCTION (EXTENDABLE STICK) | |
| | | | IN CONTROL GP - VALVE. | |
| | **133-8916** | 1 | FILM-INSTRUCTION (EXTENDABLE STICK) | |

## 238-6700 PLATE & FILM GP *(contd.)* i01994380

| NOTE | PART NUMBER | QTY | PART NAME 1 2 3 4 5 6 (PRODUCT LEVEL) | SEE PAGE |
|---|---|---|---|---|
| | | | PART OF CONTROL GP. ON HORIZONTAL SMOOTH SPOT ON RH SIDE OF REAR CONSOLE. | |
| | **186-5298** | 1 | FILM-INSTRUCTION (BUCKET CONTROL) | |
| | | | ON B-POST CENTERED ABOVE RH CONSOLE. | |
| | **7X-3229** | 2 | FILM-LIFT & TIE DOWN | |
| | | | ON TIE DOWN / SLING EYE BRACKET ON OUTSIDE OF EACH STABILIZER LEG IMMEDIATELY ABOVE TIE DOWN / SLING BRACKET. | |
| | **239-9427** | 1 | FILM-NOTICE (STICK) | |
| | | | IN LINES GP ON THE STICK. | |
| | **219-0305** | 1 | FILM-WARNING (NO WELD/NO DRILL) | |
| | | | ON THE UPPER REAR SHEET METAL PANEL OF CAB STRUCTURE. | |
| | **225-0312** | 1 | FILM-WARNING (JUMP START) | |
| | | | INSIDE OF BATTERY BOX DOOR WITH LOWER EDGE 7.5CM FROM TOP OF DOOR & 26CM FROM RIGHT EDGE OF DOOR. | |
| | | | ORIENT SO THAT IT CAN BE READ WHEN STANDING ON GROUND FACING BATTERY BOX. | |
| | **226-1240** | 1 | FILM-WARNING (STAY BACK) | |
| | | | ON BOOM 70CM UP FROM CENTER LINE OF SWING & BOOM LOWER FT-PIN, 10CM OVER FROM REAR EDGE OF BOOM WRAPPER PLATE. | |
| | **239-9430** | 1 | FILM-WARNING (ARM BRACE) | |
| | | | FOR SINGLE TILT MACHINES, ON LH SIDE OF MACHINE CENTERED ABOVE LIFT ARM SAFTY BRACE 2.5CM FROM BOTTOM EDGE OF LIFT ARM. | |
| | | | DECAL TOP MUST BE PARALLEL WITH LIFT ARM TOP EDGE. | |
| | | | FOR PARALLEL LIFT MACHINES, ON LH SIDE OF THE MACHINE ON LIFT ARM FORWARD FROM LIFT ARM SAFTY BRACE 5CM. | |
| | **240-7095** | 2 | FILM-WARNING (NO ENTRANCE/EXIT) | |
| | | | FOR CENTER PIVOT MACHINES, ON THE CAB STRUCTURE IN THE REAR 2CM FROM BOTTOM EDGE AND 19CM FROM OUTER EDGE FOR EACH. | |
| | | | FOR SIDESHIFT MACHINES, ON EACH POST ON THE SLIDEFRAME, CENTRALISED & 2.5CM DOWN FROM TOP HITCH PLATE. | |
| | **221-8045** | 1 | FILM-WARNING (SEAT BELT) | |
| | | | ON RIGHT HAND B-POST IN THE FOLLOWING ORDER; UNIVERSAL, SEAT BELT, QUICK COUPLER (IF EQUIPTED), & COLD START. | |
| | | | DECALS MUST BE ALIGNED AND EVENLY SPACED. | |
| | **240-7957** | 1 | FILM-WARNING (UNIVERSAL) | |
| | | | ON RIGHT HAND B-POST IN THE FOLLOWING ORDER; UNIVERSAL, SEAT BELT, QUICK COUPLER (IF EQUIPTED), & COLD START. | |
| | | | DECALS MUST BE ALIGNED AND EVENLY SPACED. | |
| | **225-4257** | 2 | FILM-WARNING (HOT FLUID) | |
| | | | ON BOTH SIDES, OF FRONT LH SIDE BAFFLE PLATE, 2CM FROM BOTTOM OF BAFFLE PLATE AND .5CM FROM SIDE FRAME RAIL. | |
| | **224-8946** | 1 | FILM-WARNING (ETHER) | |
| | | | IN HOOD GP - ENG. | |
| | **224-0672** | 1 | FILM-WARNING (HIGH PRESSURE CYLINDER) | |
| | | | IN LINES GP - RIDE CONTROL. | |
| | **225-4150** | 1 | PLATE (SERVICE INFORMATION) | |
| | | | CENTERED ON UPPER LH SIDE FRAME RAIL, USE FASTENER-TACKS TO ASSEMBLE. | |
| | **239-6989** | 1 | PLATE (PIN) | |
| | | | CENTERED ON UPPER RH SIDE FRAME RAIL, USE FASTENER-TACKS TO ASSEMBLE. | |
| | **199-6243** | 1 | PLATE (INSTRUCTION) | |

*238-6700* **PLATE & FILM GP** *(contd.)* **i01994380**

| NOTE | PART NUMBER | QTY | PART NAME 1 2 3 4 5 6 (PRODUCT LEVEL) | SEE PAGE |
|---|---|---|---|---|
| | | | IN A/C LINES GP. | |
| | **239-9434** | 1 | PLATE-WARNING (QUICK COUPLER) | |
| | | | ON RIGHT HAND B-POST IN THE FOLLOWING ORDER; UNIVERSAL, SEAT BELT, QUICK COUPLER (IF EQUIPTED), & COLD START. | |
| | | | DECALS MUST BE ALIGNED AND EVENLY SPACED. | |
| | **239-9436** | 1 | PLATE-WARNING (ALTERNATE CONTROL PATTERN) | |
| | | | IN CONTROL GP - VALVE ON REAR CONSOLE FOR MECHANICAL STANDARD/CROSS BACKHOE CONTROLS. | |
| B | **193-5914** | 16 | PLUG | |
| B | **193-5915** | 6 | PLUG | |
| B | **193-5916** | 4 | PLUG | |
| | | | | |
| A | **4P-6236** | 1 | PLATE-SERIAL NUMBER (ENGINE) | |
| | | | ON MOUNTING PAD ON LH SIDE OF ENGINE BLOCK. | |
| A | **4P-6396** | 1 | PLATE-CAT | |
| | | | ON TOP OF VALVE COVER READABLE FROM LH SIDE OF ENGINE. | |
| AB | **8T-6656** | 1 | FILM-IDENTIFICATION (OIL FILTER) | |
| | | | ON SPIN ON OIL FILTER. | |
| A | **4P-6422** | 1 | FILM-WARNING (NO ETHER/AIR INTAKE) | |
| | | | ON SIDE OF VALVE COVER IN VISIBLE LOCATION. | |
| A | **4P-6423** | 1 | PLATE-IDENTIFICATION | |
| | | | ON LOWER LH SIDE OF BLOCK TOWARDS REAR OF ENGINE MOUNTING PAD. | |
| | | | PLATE MAY BE INSTALLED ON RH SIDE IF OBSCURED BY STARTER. | |

A-NOT PART OF THIS GROUP
B-USE AS REQUIRED
D-ORDER BY THE METER

**<END>**

# SERVICE EQUIPMENT AND SUPPLIES

## *101-4419* PLATE AS-SIDE REFLECTIVE

**S/N: BXC1-UP; DSX1-UP**
**PART OF 190-6413 CONVERSION AR-CERTIFICATION**
**AN ATTACHMENT**

**SMCS-7405** **i00534481**

| NOTE | REF NO | GRAPHIC REF | PART NUMBER | QTY | PART NAME 1 2 3 4 5 6 (PRODUCT LEVEL) | SEE PAGE |
|---|---|---|---|---|---|---|
| | 1 | 1 | **101-4420** | 1 | PLATE | |
| | 2 | 1 | **101-4421** | 1 | BRACKET AS | |
| M | | 1 | **5C-7261** | 1 | NUT (M8X1.25 THD) | |
| M | | 1 | **8T-4244** | 1 | NUT (M12X1.75 THD) | |
| | 3 | 1 | **101-4422** | 1 | MAGNET AS | |
| | 4 | 1 | **101-4423** | 1 | REFLECTOR | |
| M | 5 | 1 | **8T-4179** | 1 | BOLT (M12X1.75X20MM) | |
| | 6 | 1 | **8T-4223** | 1 | WASHER-HARD (3MM THK) | |
| M | 7 | 1 | **101-4424** | 1 | THUMBSCREW | |
| M | 8 | 1 | **8T-0287** | 1 | BOLT (M5X.8X10MM) | |
| | 9 | 1 | **8F-1434** | 1 | LOCKWASHER (5MM ID) | |
| | 10 | 1 | **4B-4274** | 1 | WASHER (1.2MM THK) | |
| | 11 | 1 | **5P-1076** | 1 | WASHER-HARD (4MM THK) | |

M-METRIC PART

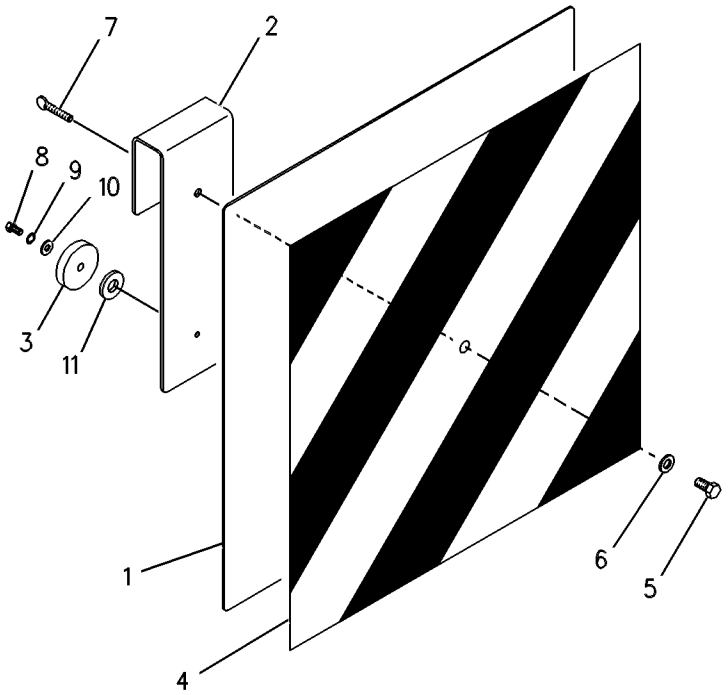


GRAPHIC #1 **<END>** g00260486

# MEMORANDA

# PART NUMBER INDEX


| Part | Page |
|---|---|
| **0** | |
| 0S-0550 | 90 |
| 0S-1603 | 35 |
| 0S-1614 | 563 |
| 0T-0318 | 222 |
| **1** | |
| 1A-0621 | 292 |
| 1A-5350 | 292 |
| 1B-2718 | 569 |
| 1B-8736 | 24 |
| | 27 |
| | 37 |
| 1H-1200 | 292 |
| 1H-3244 | 739 |
| | 740 |
| 1H-3337 | 778 |
| 1H-3338 | 117 |
| 1H-7339 | 381 |
| | 382 |
| | 388 |
| 1H-9721 | 249 |
| 1J-6474 | 609 |
| | 611 |
| 1K-0502 | 359 |
| | 361 |
| | 362 |
| 1K-6872 | 763 |
| | 765 |
| | 768 |
| | 778 |
| 1K-7082 | 237 |
| 1L-3768 | 609 |
| | 611 |
| 1L-6377 | 320 |
| 1M-6119 | 104 |
| | 106 |
| | 108 |
| | 110 |
| 1M-6120 | 104 |
| | 106 |
| | 108 |
| | 110 |
| 1P-2807 | 804 |
| | 805 |
| 1P-4278 | 90 |
| | 539 |
| 1P-4584 | 479 |
| 1P-6872 | 533 |
| 1P-7009 | 90 |
| 1P-7363 | 559 |
| | 561 |
| | 563 |
| | 565 |
| | 567 |
| | 569 |
| | 571 |
| | 573 |
| | 575 |
| | 577 |
| 1R-1804 | 88 |
| 1S-7251 | 104 |
| | 106 |
| | 108 |
| | 198 |
| 1S-7252 | 104 |
| | 106 |
| | 108 |
| | 110 |
| 1S-8947 | 305 |
| 1S-9593 | 261 |
| | 262 |
| | 263 |
| | 264 |
| | 265 |
| | 567 |
| | 569 |
| | 571 |
| | 584 |
| | 585 |
| 1U-8846 | 250 |
| | 254 |
| 1V-6341 | 256 |
| 1V-9385 | 298 |
| 1W-2934 | 715 |
| **2** | |
| 2A-4576 | 221 |
| 2B-0858 | 32 |
| | 47 |
| 2D-2628 | 266 |
| | 267 |
| 2D-2629 | 266 |
| | 267 |
| 2D-2630 | 266 |
| | 267 |
| 2D-2631 | 266 |
| | 267 |
| 2D-2633 | 266 |
| | 267 |
| 2D-6392 | 69 |
| | 72 |
| 2H-3920 | 698 |
| | 741 |
| 2H-3922 | 214 |
| 2H-3931 | 372 |
| | 374 |
| 2H-4145 | 372 |
| | 374 |
| 2H-6338 | 381 |
| 2J-3961 | 376 |
| 2K-3549 | 604 |
| 2K-4973 | 768 |
| | 770 |
| | 772 |
| | 778 |
| 2K-6830 | 386 |
| | 387 |
| 2L-6267 | 221 |
| 2M-2570 | 221 |
| 2M-7819 | 767 |
| 2M-9780 | 371 |
| | 445 |
| | 448 |
| | 450 |
| | 451 |
| | 452 |
| | 454 |
| | 455 |
| | 458 |
| | 459 |
| | 474 |
| | 479 |
| | 487 |
| | 497 |
| | 499 |
| | 521 |
| | 533 |
| | 539 |
| | 559 |
| | 561 |
| | 563 |
| | 565 |
| | 567 |
| | 569 |
| | 571 |
| | 573 |
| | 575 |
| | 577 |
| | 579 |
| 2P-1279 | 292 |
| 2P-1293 | 398 |
| | 400 |
| | 402 |
| | 404 |
| | 405 |
| | 407 |
| | 408 |
| | 412 |
| | 416 |
| | 420 |
| | 424 |
| | 428 |
| | 432 |
| | 436 |
| | 441 |
| | 502 |
| | 505 |
| 2P-7864 | 768 |
| 2P-8104 | 166 |
| 2R-0364 | 359 |
| | 361 |
| | 362 |
| 2S-0479 | 221 |
| 2S-0480 | 221 |
| | 234 |
| | 235 |
| 2S-3745 | 700 |
| | 743 |
| 2W-9499 | 767 |
| 2W-9710 | 67 |
| | 70 |
| 2Y-5821 | 386 |
| | 387 |
| **3** | |
| 3B-4505 | 768 |
| | 770 |
| | 772 |
| 3B-4509 | 221 |
| 3B-4610 | 295 |
| 3B-4631 | 778 |
| 3B-5302 | 221 |
| 3B-5317 | 527 |
| 3B-5319 | 594 |
| | 596 |
| | 690 |
| | 691 |
| | 692 |
| 3B-5322 | 590 |
| | 591 |
| 3B-5790 | 533 |
| 3B-8488 | 324 |
| | 586 |
| | 588 |
| | 613 |
| 3B-8489 | 324 |
| | 326 |
| | 329 |
| | 527 |
| | 586 |
| | 588 |
| | 594 |
| | 596 |
| | 604 |
| | 609 |
| | 611 |
| | 613 |
| | 666 |
| | 667 |
| | 668 |
| | 669 |
| | 670 |
| | 672 |
| | 674 |
| | 675 |
| | 689 |
| 3C-3681 | 130 |
| 3C-3682 | 130 |
| 3C-4883 | 130 |
| 3C-6516 | 130 |
| 3C-8388 | 533 |
| 3D-2824 | 61 |
| | 305 |
| | 398 |
| | 400 |
| | 402 |
| | 404 |
| | 405 |
| | 407 |
| | 408 |
| | 416 |
| | 440 |
| | 441 |
| | 446 |
| | 448 |
| | 451 |
| | 452 |
| | 454 |
| | 455 |
| | 458 |
| | 459 |
| | 462 |


► **PRIMARY REFERENCE**

# PART NUMBER INDEX


| Part | Page |
|---|---|
| | 464 |
| | 479 |
| | 497 |
| | 499 |
| | 501 |
| | 502 |
| | 505 |
| | 519 |
| | 521 |
| | 530 |
| | 543 |
| 3E-1908 . . . . . | ▶714 |
| | 715 |
| 3E-2333 . . . . . | 300 |
| 3E-3362 . . . . . | 261 |
| 3E-3365 . . . . . | 101 |
| | 181 |
| | 206 |
| | 210 |
| | 217 |
| | 226 |
| | 256 |
| | 262 |
| | 263 |
| | 264 |
| | 265 |
| | 359 |
| | 567 |
| | 571 |
| | 584 |
| | 585 |
| 3E-3371 . . . . . | 115 |
| | 206 |
| | 210 |
| | 263 |
| | 264 |
| | 265 |
| | 391 |
| 3E-3383 . . . . . | 120 |
| | 122 |
| | 124 |
| | 126 |
| 3E-3658 . . . . . | 714 |
| 3E-4075 . . . . . | 61 |
| 3E-4312 . . . . . | 702 |
| 3E-4321 . . . . . | 747 |
| | 749 |
| 3E-4892 . . . . . | 41 |
| | 42 |
| 3E-4924 . . . . . | 41 |
| | 42 |
| 3E-5153 . . . . . | 166 |
| 3E-5154 . . . . . | 166 |
| 3E-5180 . . . . . | 754 |
| 3E-6600 . . . . . | 336 |
| 3E-6769 . . . . . | 533 |
| 3E-6770 . . . . . | 533 |
| 3E-6922 . . . . . | 133 |
| | 136 |
| | 138 |
| | 140 |
| | 142 |
| 3E-7584 . . . . . | ▶120 |
| | 149 |
| | 158 |

| Part | Page |
|---|---|
| 3E-7585 . . . . . | ▶122 |
| | 146 |
| | 155 |
| 3E-7843 . . . . . | ▶112 |
| | 195 |
| 3E-8123 . . . . . | 799 |
| 3E-8124 . . . . . | 799 |
| 3E-8211 . . . . . | 338 |
| | 703 |
| | 704 |
| | 705 |
| | 706 |
| 3E-8620 . . . . . | 567 |
| | 569 |
| | 571 |
| 3E-8621 . . . . . | 584 |
| | 585 |
| 3E-8622 . . . . . | 489 |
| | 491 |
| | 493 |
| | 495 |
| | ▶584 |
| 3E-8679 . . . . . | 176 |
| 3E-9362 . . . . . | 133 |
| | 136 |
| | 138 |
| | 140 |
| | 142 |
| | 173 |
| | 176 |
| | 181 |
| | 193 |
| | 206 |
| | 208 |
| | 210 |
| | 212 |
| 3E-9382 . . . . . | ▶124 |
| | 152 |
| 3F-5108 . . . . . | 684 |
| 3F-9556 . . . . . | 755 |
| | 761 |
| 3G-6927 . . . . . | 250 |
| | 256 |
| 3J-1907 . . . . . | 99 |
| | 102 |
| | 189 |
| | 206 |
| | 208 |
| | 210 |
| | 212 |
| | 236 |
| | 248 |
| | 256 |
| | 292 |
| | 347 |
| | 451 |
| | 455 |
| | 459 |
| | 466 |
| | 468 |
| | 470 |
| | 472 |
| | 474 |
| | 479 |
| | 487 |

| Part | Page |
|---|---|
| | 489 |
| | 491 |
| | 493 |
| | 495 |
| | 497 |
| | 499 |
| | 513 |
| | 516 |
| | 579 |
| 3J-7352 . . . . . | 533 |
| 3J-7354 . . . . . | 102 |
| | 300 |
| | 347 |
| | 371 |
| | 477 |
| | 533 |
| | 559 |
| | 561 |
| | 563 |
| | 565 |
| | 567 |
| | 569 |
| | 571 |
| | 573 |
| | 575 |
| | 577 |
| | 579 |
| 3J-9196 . . . . . | 261 |
| | 584 |
| 3K-0360 . . . . . | 254 |
| | 300 |
| | 390 |
| | 452 |
| | 455 |
| | 458 |
| | 459 |
| | 487 |
| | 509 |
| | 511 |
| | 513 |
| | 516 |
| | 519 |
| | 573 |
| 3K-3379 . . . . . | 221 |
| 3K-8782 . . . . . | 131 |
| | 132 |
| 3N-1491 . . . . . | 704 |
| | 706 |
| 3N-5739 . . . . . | 386 |
| | 387 |
| 3N-6408 . . . . . | 220 |
| 3S-2093 . . . . . | 86 |
| | 99 |
| | 104 |
| | 106 |
| | 114 |
| | 133 |
| | 136 |
| | 138 |
| | 140 |
| | 142 |
| | 144 |
| | 146 |
| | 149 |
| | 152 |

| Part | Page |
|---|---|
| | 155 |
| | 158 |
| | 173 |
| | 176 |
| | 178 |
| | 181 |
| | 183 |
| | 185 |
| | 187 |
| | 189 |
| | 193 |
| | 195 |
| | 196 |
| | 199 |
| | 202 |
| | 203 |
| | 206 |
| | 208 |
| | 210 |
| | 212 |
| | 214 |
| | 215 |
| | 217 |
| | 250 |
| | 292 |
| | 359 |
| | 452 |
| | 455 |
| | 459 |
| | 487 |
| | 707 |
| | 709 |
| | 712 |
| | 745 |
| | 749 |
| | 775 |
| | 778 |
| | 785 |
| 3S-6049 . . . . . | 104 |
| | 106 |
| | 108 |
| | 110 |
| 3S-6050 . . . . . | 104 |
| | 106 |
| | 108 |
| | 110 |
| 3S-6162 . . . . . | 376 |
| 3T-0849 . . . . . | 581 |
| 3T-0850 . . . . . | 459 |
| 3T-3349 . . . . . | 104 |
| 3T-5760 . . . . . | 104 |
| | 106 |
| | 108 |
| **4** | |
| 4B-2043 . . . . . | 185 |
| | 187 |
| | 781 |
| | 782 |
| 4B-2049 . . . . . | 189 |
| 4B-4158 . . . . . | 804 |
| 4B-4274 . . . . . | 338 |
| | 809 |


▶ PRIMARY REFERENCE

# PART NUMBER INDEX


| Part | Page |
|---|---|
| 4B-4278 | 767 |
| 4B-4863 | 133 |
| | 136 |
| | 138 |
| | 140 |
| | 142 |
| | 173 |
| | 176 |
| | 181 |
| | 193 |
| | 199 |
| | 206 |
| | 208 |
| | 210 |
| | 212 |
| | 758 |
| 4B-5271 | 763 |
| | 765 |
| | 768 |
| 4B-9782 | 561 |
| 4B-9784 | 778 |
| 4D-7794 | 326 |
| | 329 |
| 4D-8123 | 78 |
| | 79 |
| 4D-9986 | 544 |
| | 545 |
| | 546 |
| | 547 |
| | 548 |
| | 549 |
| | 550 |
| | 551 |
| | 552 |
| | 553 |
| | 554 |
| | 556 |
| | 557 |
| 4E-8619 | 292 |
| | ►296 |
| 4F-3656 | 638 |
| | 641 |
| 4F-3657 | 625 |
| | 626 |
| | 627 |
| | 628 |
| | 629 |
| | 630 |
| | 631 |
| | 632 |
| | 633 |
| | 634 |
| | 635 |
| | 636 |
| | 637 |
| | 683 |
| | 697 |
| 4F-7952 | 250 |
| | 254 |
| 4H-1641 | 768 |
| 4H-2558 | 104 |
| | 106 |
| | 108 |
| 4I-3038 | 196 |
| 4J-0520 | 227 |
| 4J-0522 | 232 |
| | 233 |
| 4J-1888 | 666 |
| | 667 |
| | 668 |
| | 669 |
| | 670 |
| | 672 |
| | 674 |
| | 675 |
| | 679 |
| | 680 |
| | 681 |
| | 686 |
| 4J-3745 | 385 |
| 4J-5140 | 544 |
| | 545 |
| | 546 |
| | 547 |
| | 548 |
| | 549 |
| | 550 |
| | 551 |
| | 554 |
| | 556 |
| | 557 |
| 4J-5267 | 544 |
| | 545 |
| | 546 |
| | 547 |
| | 548 |
| | 549 |
| | 550 |
| | 551 |
| | 552 |
| | 553 |
| | 554 |
| | 556 |
| | 557 |
| 4J-5477 | 292 |
| | 300 |
| | 347 |
| | 451 |
| | 452 |
| | 455 |
| | 459 |
| | 474 |
| | 477 |
| | 513 |
| | 516 |
| 4J-9220 | 385 |
| 4J-9224 | 372 |
| | 374 |
| 4J-9225 | 384 |
| 4J-9780 | 579 |
| 4K-0367 | 625 |
| | 626 |
| | 627 |
| | 628 |
| | 629 |
| | 630 |
| | 631 |
| | 632 |
| | 633 |
| | 634 |
| | 635 |
| | 636 |
| | 637 |
| | 638 |
| | 641 |
| | 683 |
| | 684 |
| | 697 |
| 4K-0499 | 778 |
| 4K-1388 | 371 |
| | 559 |
| | 561 |
| | 565 |
| | 571 |
| | 573 |
| | 575 |
| | 577 |
| 4K-5843 | 220 |
| 4L-6454 | 770 |
| | 772 |
| 4M-0061 | 768 |
| | 770 |
| | 772 |
| 4M-0189 | 385 |
| 4M-6582 | 579 |
| 4P-6236 | 808 |
| 4P-6396 | 808 |
| 4P-6422 | 808 |
| 4P-6423 | 808 |
| 4P-7428 | 203 |
| 4P-7429 | 176 |
| 4P-7581 | 144 |
| | 189 |
| | 203 |
| 4P-8134 | 104 |
| | 106 |
| | 173 |
| | 178 |
| | 185 |
| | 189 |
| | 206 |
| | 208 |
| | 210 |
| | 212 |
| | 745 |
| 4S-1988 | 117 |
| 4T-2723 | 544 |
| | 545 |
| | 546 |
| | 547 |
| | 548 |
| | 549 |
| | 550 |
| | 551 |
| | 552 |
| | 553 |
| | 554 |
| | 556 |
| | 557 |
| 4T-4218 | 551 |
| 4T-4513 | 561 |
| | 569 |
| 4T-4516 | 559 |
| 4T-4517 | 552 |
| 4T-4518 | 549 |
| | 550 |
| 4T-4520 | 559 |
| | 561 |
| | 563 |
| | 565 |
| | 567 |
| | 569 |
| | 571 |
| | 573 |
| | 575 |
| | 577 |
| 4T-4521 | 559 |
| | 561 |
| | 563 |
| | 565 |
| | 567 |
| | 569 |
| | 571 |
| | 573 |
| | 575 |
| | 577 |
| 4T-4524 | 559 |
| | 561 |
| | 563 |
| | 565 |
| | 567 |
| | 569 |
| | 571 |
| | 573 |
| | 575 |
| | 577 |
| 4T-4528 | 559 |
| | 561 |
| | 563 |
| | 565 |
| | 567 |
| | 569 |
| | 571 |
| | 573 |
| | 575 |
| | 577 |
| 4T-4531 | 561 |
| | 565 |
| 4T-4532 | 561 |
| | 567 |
| | 571 |
| 4T-4533 | 559 |
| | 565 |
| | 573 |
| | 575 |
| | 577 |
| 4T-4538 | 547 |
| | 548 |
| 4T-5613 | 381 |
| | 386 |
| | 387 |
| | 388 |
| 4T-6780 | 379 |
| | 382 |
| 4T-6907 | 384 |


► PRIMARY REFERENCE

# PART NUMBER INDEX


| Part | Page |
|---|---|
| 4T-7807 | 305 |
| | 559 |
| | 561 |
| | 563 |
| | 565 |
| | 567 |
| | 569 |
| | 571 |
| | 573 |
| | 575 |
| | 577 |
| 4T-8054 | 372 |
| | 374 |
| 4T-8588 | 376 |
| 4V-2264 | 776 |
| 4V-5091 | 338 |
| 4W-4065 | 709 |
| 4W-9972 | 189 |
| **5** | |
| 5B-9079 | 50 |
| 5B-9318 | 305 |
| | 551 |
| | 552 |
| | 553 |
| | 554 |
| | 556 |
| | 557 |
| | 559 |
| | 561 |
| | 563 |
| | 565 |
| | 567 |
| | 569 |
| | 571 |
| | 573 |
| | 575 |
| | 577 |
| 5B-9385 | 384 |
| 5C-2874 | 128 |
| | 189 |
| | 787 |
| | 789 |
| | 793 |
| | 795 |
| 5C-2890 | 86 |
| | 117 |
| | 131 |
| | 171 |
| | 189 |
| | 333 |
| | 338 |
| | 350 |
| | 351 |
| | 363 |
| | 364 |
| 5C-7261 | 115 |
| | 199 |
| | 292 |
| | 297 |
| | 298 |
| | 299 |
| | 338 |
| | 474 |
| | 487 |
| | 513 |
| | 516 |
| | 541 |
| | 707 |
| | 709 |
| | 712 |
| | 755 |
| | 761 |
| | 787 |
| | 789 |
| | 809 |
| 5C-8813 | 797 |
| 5C-9553 | 176 |
| | 363 |
| | 364 |
| | 474 |
| | 761 |
| 5D-1026 | 25 |
| | 300 |
| | 443 |
| | 444 |
| | 474 |
| | 479 |
| | 539 |
| | 747 |
| | 749 |
| 5D-4822 | 338 |
| 5D-8159 | 686 |
| 5F-3106 | 528 |
| 5F-5434 | 237 |
| 5F-9144 | 69 |
| | 72 |
| 5G-3244 | 117 |
| | 120 |
| | 122 |
| | 124 |
| | 126 |
| 5G-7820 | 195 |
| 5G-8108 | 292 |
| 5H-3193 | 359 |
| 5H-8848 | 379 |
| 5J-4986 | 385 |
| 5J-5402 | 386 |
| | 387 |
| 5J-7010 | 384 |
| 5J-7878 | 385 |
| 5J-8156 | 372 |
| | 374 |
| 5K-0906 | 477 |
| 5K-5338 | 300 |
| 5K-9090 | 371 |
| | 408 |
| | 409 |
| | 412 |
| | 416 |
| | 420 |
| | 424 |
| | 428 |
| | 432 |
| | 436 |
| | 441 |
| | 479 |
| | 482 |
| | 483 |
| | 484 |
| | 485 |
| | 486 |
| | 505 |
| | 545 |
| | 546 |
| | 558 |
| | 559 |
| | 561 |
| | 565 |
| | 571 |
| | 573 |
| | 575 |
| | 577 |
| 5L-3308 | 703 |
| | 705 |
| | 711 |
| 5L-9018 | 221 |
| 5L-9023 | 567 |
| | 569 |
| | 571 |
| 5L-9656 | 221 |
| 5M-2894 | 547 |
| | 548 |
| | 549 |
| | 550 |
| | 551 |
| | 552 |
| | 553 |
| | 554 |
| | 556 |
| | 557 |
| 5M-3062 | 778 |
| 5P-0078 | 90 |
| 5P-0370 | 599 |
| 5P-0372 | 225 |
| 5P-0537 | 561 |
| | 563 |
| | 567 |
| | 569 |
| | 571 |
| 5P-0540 | 222 |
| 5P-0598 | 445 |
| 5P-0599 | 440 |
| | 441 |
| | 451 |
| | 458 |
| | 501 |
| | 502 |
| | 505 |
| | 509 |
| | 511 |
| | 513 |
| | 516 |
| 5P-0600 | 73 |
| 5P-0743 | 390 |
| 5P-0747 | 104 |
| | 106 |
| | 108 |
| | 110 |
| 5P-0761 | 104 |
| | 106 |
| | 108 |
| | 110 |
| 5P-0767 | 747 |
| | 749 |
| 5P-1042 | 452 |
| 5P-1076 | 809 |
| 5P-1420 | 90 |
| 5P-1442 | 90 |
| | 293 |
| | 539 |
| 5P-1505 | 300 |
| | 474 |
| | 479 |
| | 539 |
| 5P-1506 | 479 |
| 5P-2199 | 579 |
| 5P-3915 | 698 |
| 5P-4115 | 336 |
| | 363 |
| | 364 |
| | 474 |
| | 687 |
| | 698 |
| | 791 |
| 5P-4116 | 56 |
| | 57 |
| | 59 |
| | 61 |
| | 100 |
| | 108 |
| | 306 |
| | 307 |
| | 479 |
| | 603 |
| | 707 |
| | 709 |
| | 712 |
| | 731 |
| | 733 |
| | 757 |
| | 791 |
| 5P-4295 | 300 |
| 5P-4868 | 73 |
| | 80 |
| | 81 |
| | 82 |
| | 479 |
| 5P-5599 | 581 |
| 5P-5637 | 791 |
| 5P-5923 | 198 |
| 5P-5924 | 749 |
| 5P-6011 | 700 |
| 5P-6129 | 67 |
| | 70 |
| 5P-6718 | 43 |
| | 250 |
| | 256 |
| 5P-7462 | 300 |
| 5P-7463 | 300 |
| 5P-7464 | 441 |
| | 466 |
| | 468 |
| | 470 |
| | 472 |
| | 502 |
| | 505 |
| 5P-7465 | 441 |

# PART NUMBER INDEX


| Part | Page |
|---|---|
| | 466 |
| | 468 |
| | 470 |
| | 472 |
| | 502 |
| | 505 |
| 5P-7466 . . . . . | 408 |
| | 412 |
| | 416 |
| | 420 |
| | 424 |
| | 428 |
| | 432 |
| | 436 |
| | 441 |
| | 502 |
| | 505 |
| 5P-7467 . . . . . | 408 |
| | 412 |
| | 416 |
| | 420 |
| | 424 |
| | 428 |
| | 432 |
| | 436 |
| | 441 |
| | 502 |
| | 505 |
| 5P-7468 . . . . . | 408 |
| | 412 |
| | 416 |
| | 420 |
| | 424 |
| | 428 |
| | 432 |
| | 436 |
| | 502 |
| | 505 |
| 5P-7469 . . . . . | 408 |
| | 412 |
| | 417 |
| | 420 |
| | 424 |
| | 428 |
| | 432 |
| | 436 |
| | 502 |
| | 505 |
| 5P-7657 . . . . . | 198 |
| 5P-7854 . . . . . | 232 |
| | 233 |
| | 749 |
| 5P-7921 . . . . . | 700 |
| | 743 |
| 5P-7957 . . . . . | 713 |
| 5P-7958 . . . . . | 326 |
| | 329 |
| | 713 |
| 5P-8066 . . . . . | 250 |
| | 254 |
| 5P-8112 . . . . . | 408 |
| | 412 |
| | 417 |
| | 420 |
| | 424 |

| Part | Page |
|---|---|
| | 428 |
| | 432 |
| | 436 |
| | 441 |
| | 502 |
| | 505 |
| 5P-8245 . . . . . | 35 |
| | 763 |
| | 765 |
| | 768 |
| 5P-8250 . . . . . | 382 |
| | 384 |
| 5P-8444 . . . . . | 408 |
| | 412 |
| | 417 |
| | 420 |
| | 424 |
| | 428 |
| | 432 |
| | 436 |
| | 713 |
| 5P-8500 . . . . . | 802 |
| | 803 |
| 5P-8502 . . . . . | 802 |
| | 803 |
| 5P-9000 . . . . . | 338 |
| | 721 |
| | 722 |
| | 758 |
| 5P-9262 . . . . . | 582 |
| 5S-7379 . . . . . | 768 |
| 5V-2545 . . . . . | 241 |
| | 242 |
| | 243 |
| | 244 |
| 5W-9411 . . . . . | 78 |
| | 79 |
| **6** | |
| 6B-0933 . . . . . | 103 |
| 6B-4661 . . . . . | 58 |
| 6C-3677 . . . . . | 767 |
| 6C-3680 . . . . . | 700 |
| | 743 |
| 6D-0337 . . . . . | ►266 |
| | 267 |
| | 272 |
| | 273 |
| | 274 |
| | 275 |
| | 281 |
| | 282 |
| | 285 |
| | 286 |
| | 287 |
| | 288 |
| 6D-0443 . . . . . | 266 |
| | 267 |
| 6D-3479 . . . . . | 539 |
| 6D-4246 . . . . . | 300 |
| | 474 |
| | 749 |
| 6D-7573 . . . . . | 90 |

| Part | Page |
|---|---|
| 6E-0122 . . . . . | 382 |
| 6E-0131 . . . . . | 565 |
| 6E-0358 . . . . . | 371 |
| | 559 |
| | 561 |
| | 565 |
| | 571 |
| | 573 |
| | 575 |
| | 577 |
| 6E-1478 . . . . . | 386 |
| | 387 |
| 6E-3268 . . . . . | 582 |
| 6E-3269 . . . . . | 582 |
| 6E-3272 . . . . . | 582 |
| 6E-3273 . . . . . | 582 |
| 6E-3274 . . . . . | 582 |
| 6E-3275 . . . . . | 582 |
| 6E-3276 . . . . . | 582 |
| 6E-3341 . . . . . | 536 |
| 6E-3583 . . . . . | 579 |
| 6E-4000 . . . . . | 533 |
| 6E-4003 . . . . . | 533 |
| 6E-4004 . . . . . | 533 |
| 6E-4007 . . . . . | 536 |
| 6E-4009 . . . . . | 536 |
| 6E-4317 . . . . . | 371 |
| | 559 |
| | 561 |
| | 563 |
| | 567 |
| | 569 |
| | 571 |
| 6E-5759 . . . . . | 579 |
| 6E-5760 . . . . . | 579 |
| 6E-6151 . . . . . | 536 |
| 6E-6154 . . . . . | 536 |
| 6E-6155 . . . . . | 536 |
| 6E-6157 . . . . . | 536 |
| 6E-6158 . . . . . | 536 |
| 6E-6174 . . . . . | 533 |
| 6E-6175 . . . . . | 533 |
| 6E-6176 . . . . . | 533 |
| 6E-6285 . . . . . | 575 |
| 6E-6527 . . . . . | 582 |
| 6E-6528 . . . . . | 581 |
| | 582 |
| 6F-7037 . . . . . | 382 |
| 6H-3616 . . . . . | 40 |
| 6I-0217 . . . . . | 37 |
| | 43 |
| | 63 |
| | 84 |
| | 93 |
| | 96 |
| 6I-0254 . . . . . | 63 |
| 6I-0260 . . . . . | 25 |
| | 43 |
| | 53 |
| | 54 |
| | 93 |
| | 96 |
| | 103 |
| 6I-0289 . . . . . | 43 |
| 6I-0291 . . . . . | 93 |

| Part | Page |
|---|---|
| | 96 |
| 6I-0363 . . . . . | 43 |
| 6I-0364 . . . . . | 168 |
| 6I-0423 . . . . . | 36 |
| 6I-0454 . . . . . | 103 |
| 6I-0501 . . . . . | 49 |
| 6I-0502 . . . . . | 49 |
| 6I-0563 . . . . . | 83 |
| | 84 |
| 6I-0572 . . . . . | 29 |
| | 43 |
| | 54 |
| | 76 |
| | 84 |
| 6I-0594 . . . . . | 103 |
| | 168 |
| 6I-0645 . . . . . | 37 |
| | 54 |
| 6I-0789 . . . . . | 37 |
| 6I-0846 . . . . . | 25 |
| 6I-0847 . . . . . | 36 |
| 6I-0917 . . . . . | 25 |
| 6I-1418 . . . . . | 115 |
| 6I-1497 . . . . . | 51 |
| 6I-4374 . . . . . | 54 |
| 6J-1972 . . . . . | 379 |
| | 382 |
| 6J-2420 . . . . . | 388 |
| 6J-2680 . . . . . | 479 |
| 6J-2797 . . . . . | 386 |
| | 387 |
| 6J-5731 . . . . . | 379 |
| 6J-5733 . . . . . | 379 |
| | 382 |
| 6K-0806 . . . . . | 115 |
| | 176 |
| | 185 |
| | 187 |
| | 189 |
| | 198 |
| | 249 |
| | 326 |
| | 329 |
| | 797 |
| 6K-8178 . . . . . | 90 |
| | 477 |
| 6L-4725 . . . . . | 698 |
| | 741 |
| 6L-6208 . . . . . | 376 |
| 6N-6984 . . . . . | 67 |
| | 70 |
| 6P-8855 . . . . . | 747 |
| | 749 |
| 6R-3299 . . . . . | 486 |
| 6R-7490 . . . . . | 776 |
| 6S-6646 . . . . . | 600 |
| 6S-8620 . . . . . | 292 |
| 6T-9142 . . . . . | 249 |
| 6T-9143 . . . . . | 249 |
| 6T-9144 . . . . . | 249 |
| 6T-9145 . . . . . | 249 |
| 6T-9146 . . . . . | 249 |
| 6T-9147 . . . . . | 249 |
| 6T-9160 . . . . . | 248 |
| 6T-9163 . . . . . | 249 |


► PRIMARY REFERENCE

# PART NUMBER INDEX


| Part | Page |
|---|---|
| | 254 |
| 6T-9164 . . . . . | 249 |
| | 254 |
| 6T-9165 . . . . . | 249 |
| | 254 |
| 6T-9166 . . . . . | 249 |
| | 254 |
| 6T-9194 . . . . . | 248 |
| | 255 |
| 6T-9196 . . . . . | 248 |
| | 255 |
| 6T-9202 . . . . . | 254 |
| 6V-0683 . . . . . | 300 |
| 6V-0826 . . . . . | 497 |
| | 499 |
| 6V-0852 . . . . . | 347 |
| | 474 |
| | 479 |
| 6V-1249 . . . . . | 441 |
| | 466 |
| | 468 |
| | 470 |
| | 472 |
| | 502 |
| | 505 |
| 6V-1363 . . . . . | 78 |
| | 79 |
| 6V-2323 . . . . . | 533 |
| 6V-2410 . . . . . | 776 |
| 6V-2687 . . . . . | 702 |
| 6V-2722 . . . . . | 104 |
| | 106 |
| | 108 |
| 6V-3213 . . . . . | 586 |
| | 594 |
| | 596 |
| | 606 |
| | 639 |
| | 640 |
| | 642 |
| | 663 |
| | 664 |
| | 665 |
| 6V-3582 . . . . . | 73 |
| 6V-3965 . . . . . | 347 |
| | 474 |
| | 479 |
| 6V-4364 . . . . . | 594 |
| | 596 |
| | 613 |
| | 639 |
| | 640 |
| | 642 |
| | 663 |
| | 664 |
| | 665 |
| 6V-4589 . . . . . | 248 |
| | 254 |
| 6V-5100 . . . . . | 250 |
| | 255 |
| 6V-5653 . . . . . | 479 |
| | 539 |
| 6V-5683 . . . . . | 533 |
| 6V-6717 . . . . . | 698 |
| | 700 |
| | 741 |
| | 743 |
| 6V-6813 . . . . . | 698 |
| | 741 |
| 6V-7238 . . . . . | 390 |
| 6V-7357 . . . . . | 189 |
| | 700 |
| | 743 |
| 6V-7420 . . . . . | 452 |
| | 455 |
| 6V-7687 . . . . . | 326 |
| | 329 |
| | 586 |
| | 588 |
| | 604 |
| | 613 |
| 6V-7731 . . . . . | 248 |
| 6V-7743 . . . . . | 316 |
| | 709 |
| | 787 |
| | 789 |
| | 793 |
| | 795 |
| 6V-7744 . . . . . | 317 |
| | 318 |
| | 352 |
| | 354 |
| | 356 |
| | 359 |
| | 365 |
| | 367 |
| | 398 |
| | 400 |
| | 408 |
| | 417 |
| | 452 |
| 6V-8097 . . . . . | 249 |
| | 254 |
| 6V-8144 . . . . . | 586 |
| | 686 |
| | 689 |
| 6V-8185 . . . . . | 778 |
| 6V-8186 . . . . . | 761 |
| 6V-8210 . . . . . | 249 |
| | 255 |
| 6V-8227 . . . . . | 298 |
| 6V-8236 . . . . . | 581 |
| 6V-8237 . . . . . | 379 |
| | 388 |
| 6V-8335 . . . . . | 248 |
| | 256 |
| | 365 |
| | 367 |
| 6V-8344 . . . . . | 604 |
| | 613 |
| 6V-8352 . . . . . | 582 |
| 6V-8363 . . . . . | 214 |
| 6V-8370 . . . . . | 214 |
| 6V-8378 . . . . . | 173 |
| | 193 |
| 6V-8397 . . . . . | 102 |
| | 300 |
| | 443 |
| | 444 |
| | 451 |
| | 455 |
| | 459 |
| | 466 |
| | 468 |
| | 470 |
| | 472 |
| | 489 |
| | 491 |
| | 493 |
| | 495 |
| | 497 |
| | 499 |
| 6V-8398 . . . . . | 300 |
| | 372 |
| | 374 |
| | 379 |
| | 385 |
| | 388 |
| | 398 |
| | 400 |
| | 402 |
| | 405 |
| | 428 |
| | 436 |
| | 441 |
| | 446 |
| | 448 |
| | 450 |
| | 451 |
| | 454 |
| | 455 |
| | 458 |
| | 459 |
| | 462 |
| | 464 |
| | 466 |
| | 468 |
| | 470 |
| | 472 |
| | 487 |
| | 497 |
| | 499 |
| | 502 |
| | 505 |
| | 509 |
| | 511 |
| | 513 |
| | 516 |
| | 519 |
| | 521 |
| 6V-8455 . . . . . | 231 |
| 6V-8500 . . . . . | 248 |
| 6V-8553 . . . . . | 90 |
| 6V-8555 . . . . . | 452 |
| | 455 |
| | 459 |
| 6V-8556 . . . . . | 452 |
| 6V-8560 . . . . . | 90 |
| 6V-8625 . . . . . | 487 |
| | 509 |
| | 511 |
| | 513 |
| | 516 |
| | 519 |
| 6V-8626 . . . . . | 445 |
| | 448 |
| | 450 |
| | 459 |
| | 487 |
| | 521 |
| 6V-8627 . . . . . | 292 |
| | 451 |
| | 455 |
| | 459 |
| 6V-8628 . . . . . | 300 |
| | 477 |
| 6V-8632 . . . . . | 458 |
| | 509 |
| | 511 |
| | 513 |
| | 516 |
| 6V-8634 . . . . . | 300 |
| 6V-8635 . . . . . | 409 |
| | 412 |
| | 416 |
| | 420 |
| | 424 |
| | 428 |
| | 432 |
| | 436 |
| | 482 |
| 6V-8636 . . . . . | 451 |
| | 466 |
| | 468 |
| | 470 |
| | 472 |
| | 497 |
| | 499 |
| 6V-8637 . . . . . | 440 |
| | 452 |
| | 497 |
| | 499 |
| 6V-8638 . . . . . | 451 |
| | 454 |
| | 497 |
| | 499 |
| 6V-8639 . . . . . | 458 |
| 6V-8640 . . . . . | 451 |
| 6V-8641 . . . . . | 292 |
| | 451 |
| | 474 |
| 6V-8642 . . . . . | 454 |
| | 458 |
| 6V-8647 . . . . . | 300 |
| | 347 |
| | 477 |
| 6V-8713 . . . . . | 398 |
| | 400 |
| | 402 |
| | 404 |
| | 405 |
| | 407 |
| | 408 |
| | 416 |
| | 446 |
| | 448 |
| | 451 |
| | 454 |
| | 458 |
| | 462 |

# PART NUMBER INDEX


| Part | Page |
|---|---|
| | 464 |
| | 501 |
| | 519 |
| | 521 |
| 6V-8716 . . . . . | 59 |
| | 61 |
| 6V-8724 . . . . . | 489 |
| | 491 |
| | 493 |
| | 495 |
| 6V-8757 . . . . . | 249 |
| | 255 |
| 6V-8759 . . . . . | 290 |
| 6V-8774 . . . . . | 489 |
| | 491 |
| | 493 |
| | 495 |
| 6V-8781 . . . . . | 451 |
| 6V-8785 . . . . . | 484 |
| | 545 |
| | 546 |
| 6V-8788 . . . . . | 489 |
| | 491 |
| | 493 |
| | 495 |
| 6V-8789 . . . . . | 509 |
| | 511 |
| 6V-8792 . . . . . | 428 |
| | 436 |
| | 505 |
| 6V-8837 . . . . . | 117 |
| 6V-8932 . . . . . | 354 |
| 6V-8937 . . . . . | 452 |
| 6V-8938 . . . . . | 455 |
| | 459 |
| 6V-8941 . . . . . | 451 |
| 6V-8945 . . . . . | 428 |
| | 436 |
| | 505 |
| 6V-8987 . . . . . | 489 |
| | 491 |
| | 493 |
| | 495 |
| 6V-8995 . . . . . | 441 |
| 6V-8997 . . . . . | 441 |
| 6V-9002 . . . . . | 509 |
| | 511 |
| | 513 |
| | 516 |
| 6V-9007 . . . . . | 497 |
| | 499 |
| | 502 |
| | 505 |
| 6V-9168 . . . . . | 443 |
| | 444 |
| | 489 |
| | 491 |
| | 493 |
| | 495 |
| 6V-9169 . . . . . | 398 |
| | 400 |
| | 402 |
| | 405 |
| | 441 |
| | 502 |
| | 505 |
| 6V-9170 . . . . . | 398 |
| | 400 |
| 6V-9172 . . . . . | 408 |
| | 412 |
| | 417 |
| | 420 |
| | 424 |
| | 428 |
| | 432 |
| | 436 |
| 6V-9178 . . . . . | 248 |
| | 260 |
| 6V-9182 . . . . . | 59 |
| | 61 |
| 6V-9189 . . . . . | 291 |
| | 529 |
| | 532 |
| | 757 |
| 6V-9632 . . . . . | 86 |
| | 298 |
| | 336 |
| | 698 |
| | 776 |
| 6V-9649 . . . . . | 408 |
| | 416 |
| | 424 |
| | 432 |
| 6V-9746 . . . . . | 59 |
| | 61 |
| | 376 |
| | 398 |
| | 400 |
| | 402 |
| | 404 |
| | 405 |
| | 407 |
| | 408 |
| | 412 |
| | 416 |
| | 417 |
| | 420 |
| | 424 |
| | 428 |
| | 432 |
| | 436 |
| | 440 |
| | 441 |
| | 451 |
| | 452 |
| | 479 |
| | 486 |
| | 497 |
| | 499 |
| | 502 |
| | 505 |
| 6V-9807 . . . . . | 443 |
| | 444 |
| 6V-9828 . . . . . | 474 |
| 6V-9830 . . . . . | 462 |
| | 464 |
| 6V-9831 . . . . . | 446 |
| | 448 |
| | 455 |
| | 459 |
| 6V-9833 . . . . . | 505 |
| 6V-9838 . . . . . | 446 |
| | 448 |
| | 452 |
| | 455 |
| | 459 |
| | 519 |
| 6V-9839 . . . . . | 452 |
| 6V-9840 . . . . . | 482 |
| | 483 |
| | 485 |
| | 486 |
| 6V-9849 . . . . . | 477 |
| | 513 |
| | 516 |
| 6V-9850 . . . . . | 300 |
| 6V-9852 . . . . . | 459 |
| | 521 |
| 6V-9854 . . . . . | 408 |
| | 412 |
| | 416 |
| | 420 |
| | 479 |
| 6V-9872 . . . . . | 102 |
| 6V-9873 . . . . . | 487 |
| 6Y-1192 . . . . . | 255 |
| 6Y-1341 . . . . . | 250 |
| 6Y-1896 . . . . . | 250 |
| | 256 |
| 6Y-2035 . . . . . | 248 |
| 6Y-2326 . . . . . | 248 |
| 6Y-2736 . . . . . | 249 |
| 6Y-2737 . . . . . | 249 |
| 6Y-7652 . . . . . | 220 |
| 6Y-7929 . . . . . | 255 |
| 6Y-7957 . . . . . | 248 |
| | 256 |
| 6Y-9915 . . . . . | 41 |
| | 42 |


## 7


| Part | Page |
|---|---|
| 7C-0351 . . . . . | 43 |
| 7C-1224 . . . . . | 43 |
| 7C-1281 . . . . . | 25 |
| 7C-4616 . . . . . | 37 |
| 7D-7233 . . . . . | 51 |
| | 474 |
| | 479 |
| 7E-3870 . . . . . | 77 |
| 7F-3400 . . . . . | 713 |
| 7F-6998 . . . . . | 749 |
| 7G-1060 . . . . . | 198 |
| 7I-5486 . . . . . | 468 |
| 7J-0204 . . . . . | 305 |
| | 559 |
| | 561 |
| | 563 |
| | 565 |
| | 567 |
| | 569 |
| | 571 |
| | 573 |
| | 575 |
| | 577 |
| | 579 |
| 7J-9108 . . . . . | 381 |
| | 398 |
| | 400 |
| | 402 |
| | 404 |
| | 405 |
| | 407 |
| | 408 |
| | 416 |
| | 428 |
| | 436 |
| | 440 |
| | 445 |
| | 446 |
| | 448 |
| | 450 |
| | 451 |
| | 452 |
| | 454 |
| | 455 |
| | 458 |
| | 459 |
| | 462 |
| | 464 |
| | 487 |
| | 501 |
| | 502 |
| | 505 |
| | 509 |
| | 511 |
| | 513 |
| | 516 |
| | 519 |
| | 521 |
| 7J-9885 . . . . . | 372 |
| | 374 |
| 7K-1181 . . . . . | 59 |
| | 61 |
| | 86 |
| | 104 |
| | 106 |
| | 108 |
| | 176 |
| | 185 |
| | 187 |
| | 189 |
| | 203 |
| | 300 |
| | 446 |
| | 448 |
| | 454 |
| | 458 |
| | 462 |
| | 464 |
| | 479 |
| | 487 |
| | 519 |
| | 521 |
| 7K-9205 . . . . . | 324 |
| 7M-0242 . . . . . | 291 |
| 7M-8485 . . . . . | 59 |
| | 61 |
| | 305 |


► PRIMARY REFERENCE

# PART NUMBER INDEX


| Part | Page |
|---|---|
| | 408 |
| | 409 |
| | 412 |
| | 416 |
| | 420 |
| | 424 |
| | 428 |
| | 432 |
| | 436 |
| | 479 |
| | 482 |
| | 483 |
| | 484 |
| | 485 |
| | 486 |
| | 545 |
| | 546 |
| | 558 |
| 7N-5274 . . . . . | 104 |
| | 106 |
| | 108 |
| | 110 |
| 7N-7779 . . . . . | 296 |
| 7N-7780 . . . . . | 296 |
| 7N-9737 . . . . . | 296 |
| 7R-8239 . . . . . | 295 |
| 7S-3916 . . . . . | 408 |
| | 412 |
| | 417 |
| | 420 |
| | 424 |
| | 428 |
| | 432 |
| | 436 |
| 7S-3919 . . . . . | 408 |
| | 412 |
| | 417 |
| | 420 |
| | 424 |
| | 428 |
| | 432 |
| | 436 |
| 7T-0093 . . . . . | 700 |
| | 743 |
| 7T-0525 . . . . . | 338 |
| 7T-1099 . . . . . | 298 |
| | 308 |
| | 539 |
| | 776 |
| 7T-1342 . . . . . | 584 |
| 7T-2646 . . . . . | 249 |
| | 254 |
| 7T-2651 . . . . . | 250 |
| | 254 |
| 7T-3017 . . . . . | 248 |
| 7T-3018 . . . . . | 248 |
| 7T-3021 . . . . . | 248 |
| 7T-3022 . . . . . | 248 |
| 7T-3034 . . . . . | 249 |
| 7T-3051 . . . . . | 249 |
| 7T-3109 . . . . . | 250 |
| 7T-3111 . . . . . | 249 |
| 7T-3119 . . . . . | 249 |
| 7T-3195 . . . . . | 249 |
| | 254 |
| 7T-3249 . . . . . | 250 |
| 7T-3251 . . . . . | 249 |
| | 256 |
| 7T-3253 . . . . . | 250 |
| | 256 |
| 7T-4532 . . . . . | 714 |
| 7T-4848 . . . . . | 198 |
| 7T-6087 . . . . . | 166 |
| 7T-6088 . . . . . | 166 |
| 7T-6090 . . . . . | 166 |
| 7T-6092 . . . . . | 166 |
| 7T-6093 . . . . . | 166 |
| 7T-6099 . . . . . | 166 |
| 7T-6652 . . . . . | 220 |
| 7T-6653 . . . . . | 221 |
| 7T-6654 . . . . . | 221 |
| 7T-6655 . . . . . | 255 |
| 7T-6799 . . . . . | 758 |
| 7T-7621 . . . . . | 221 |
| 7T-8895 . . . . . | 307 |
| | 308 |
| 7T-9987 . . . . . | 104 |
| | 110 |
| 7W-1176 . . . . . | 36 |
| 7W-2326 . . . . . | 51 |
| 7W-2632 . . . . . | 103 |
| 7W-3556 . . . . . | 254 |
| 7W-4634 . . . . . | 49 |
| 7W-4642 . . . . . | 36 |
| 7X-0465 . . . . . | 363 |
| | 364 |
| 7X-0481 . . . . . | 778 |
| 7X-0546 . . . . . | 762 |
| 7X-0572 . . . . . | 311 |
| 7X-0578 . . . . . | 308 |
| 7X-0579 . . . . . | 65 |
| | 66 |
| | 338 |
| | 716 |
| 7X-0603 . . . . . | 67 |
| | 70 |
| 7X-0622 . . . . . | 778 |
| 7X-0818 . . . . . | 115 |
| 7X-2049 . . . . . | 700 |
| 7X-2393 . . . . . | 709 |
| | 787 |
| | 789 |
| 7X-2444 . . . . . | 474 |
| 7X-2465 . . . . . | 324 |
| 7X-2497 . . . . . | 731 |
| | 733 |
| 7X-2538 . . . . . | 487 |
| 7X-2553 . . . . . | 245 |
| | 246 |
| 7X-2554 . . . . . | 336 |
| 7X-2568 . . . . . | 311 |
| 7X-2570 . . . . . | 237 |
| 7X-3164 . . . . . | 451 |
| | 454 |
| 7X-3166 . . . . . | 451 |
| 7X-3229 . . . . . | 804 |
| | 805 |
| | 807 |
| 7X-4741 . . . . . | 250 |
| | 254 |
| 7X-4744 . . . . . | 248 |
| | 260 |
| 7X-7644 . . . . . | 804 |
| | 805 |
| 7X-7729 . . . . . | 51 |
| | 61 |
| | 104 |
| | 106 |
| | 110 |
| | 199 |
| | 326 |
| | 329 |
| | 336 |
| | 352 |
| | 354 |
| | 695 |
| | 696 |
| | 785 |
| 7X-9065 . . . . . | 185 |
| | 187 |
| 7Y-3883 . . . . . | 198 |
| 7Y-4224 . . . . . | 579 |
| **8** | |
| 8B-1419 . . . . . | 225 |
| 8B-2377 . . . . . | 571 |
| 8B-6127 . . . . . | 90 |
| 8B-7121 . . . . . | 678 |
| 8C-0572 . . . . . | 69 |
| | 72 |
| | 767 |
| 8C-3056 . . . . . | 189 |
| 8C-3291 . . . . . | 320 |
| 8C-3443 . . . . . | 485 |
| 8C-4447 . . . . . | 806 |
| 8C-4987 . . . . . | 225 |
| | 352 |
| | 356 |
| | 359 |
| | 361 |
| | 362 |
| | 365 |
| | 367 |
| 8C-5457 . . . . . | 166 |
| 8C-5723 . . . . . | 483 |
| 8C-5748 . . . . . | 248 |
| | 254 |
| 8C-7110 . . . . . | 533 |
| 8C-8418 . . . . . | 236 |
| 8C-8451 . . . . . | 797 |
| 8C-8478 . . . . . | 312 |
| | 313 |
| | 314 |
| | 315 |
| 8C-8522 . . . . . | 316 |
| 8C-8545 . . . . . | 254 |
| 8C-8992 . . . . . | 762 |
| 8C-9778 . . . . . | 166 |
| 8C-9783 . . . . . | 166 |
| 8D-2707 . . . . . | 266 |
| | 267 |
| 8D-5294 . . . . . | 603 |
| 8E-1118 . . . . . | 178 |
| 8E-3081 . . . . . | 466 |
| 8E-5707 . . . . . | 248 |
| | 255 |
| 8F-0212 . . . . . | 561 |
| | 567 |
| 8F-1434 . . . . . | 128 |
| | 166 |
| | 173 |
| | 189 |
| | 193 |
| | 214 |
| | 809 |
| 8F-6302 . . . . . | 567 |
| 8F-6711 . . . . . | 324 |
| 8F-8151 . . . . . | 58 |
| 8F-8882 . . . . . | 388 |
| 8H-0707 . . . . . | 559 |
| | 563 |
| | 565 |
| | 573 |
| | 575 |
| | 577 |
| 8H-1607 . . . . . | 221 |
| 8H-7521 . . . . . | 386 |
| | 387 |
| 8I-4721 . . . . . | 117 |
| 8J-0112 . . . . . | 384 |
| 8J-2574 . . . . . | 381 |
| | 382 |
| 8J-4455 . . . . . | 166 |
| 8L-2746 . . . . . | 248 |
| | 254 |
| 8L-2779 . . . . . | 262 |
| | 263 |
| | 264 |
| | 265 |
| 8L-8413 . . . . . | 101 |
| | 110 |
| | 133 |
| 8M-2770 . . . . . | 320 |
| 8M-2773 . . . . . | 452 |
| 8M-3175 . . . . . | 365 |
| | 367 |
| 8M-8157 . . . . . | 221 |
| 8N-0869 . . . . . | 104 |
| | 106 |
| | 108 |
| | 110 |
| 8N-2694 . . . . . | 78 |
| 8Q-4396 . . . . . | 144 |
| 8R-0768 . . . . . | 108 |
| 8R-2916 . . . . . | 304 |
| 8R-6111 . . . . . | 178 |
| 8R-6263 . . . . . | 296 |
| 8S-0023 . . . . . | 232 |
| | 233 |
| 8S-0024 . . . . . | 232 |
| | 233 |
| 8S-3020 . . . . . | 110 |
| 8S-4710 . . . . . | 561 |
| 8S-4734 . . . . . | 291 |
| 8S-4740 . . . . . | 221 |
| 8S-7803 . . . . . | 702 |
| | 707 |
| | 709 |

# PART NUMBER INDEX


| Part | Page |
|---|---|
| | 767 |
| | 770 |
| | 772 |
| | 778 |
| 8S-8158 . . . . . | 236 |
| 8S-9151 . . . . . | 220 |
| 8T-0144 . . . . . | 677 |
| | 678 |
| 8T-0154 . . . . . | 390 |
| 8T-0271 . . . . . | 254 |
| 8T-0276 . . . . . | 291 |
| 8T-0287 . . . . . | 809 |
| 8T-0328 . . . . . | 173 |
| | 189 |
| | 193 |
| | 363 |
| | 364 |
| 8T-0352 . . . . . | 155 |
| | 158 |
| | 178 |
| 8T-0389 . . . . . | 120 |
| | 122 |
| | 124 |
| | 126 |
| | 525 |
| | 695 |
| | 696 |
| 8T-0404 . . . . . | 464 |
| 8T-0643 . . . . . | 256 |
| 8T-0785 . . . . . | 372 |
| | 374 |
| | 385 |
| 8T-0789 . . . . . | 785 |
| 8T-0799 . . . . . | 241 |
| 8T-1118 . . . . . | 785 |
| 8T-1159 . . . . . | 90 |
| 8T-1580 . . . . . | 249 |
| | 254 |
| 8T-1581 . . . . . | 249 |
| | 254 |
| 8T-1605 . . . . . | 372 |
| | 374 |
| 8T-1683 . . . . . | 300 |
| 8T-1686 . . . . . | 300 |
| | 487 |
| 8T-1779 . . . . . | 489 |
| | 491 |
| | 493 |
| | 495 |
| 8T-1885 . . . . . | 509 |
| | 511 |
| | 513 |
| | 516 |
| 8T-1886 . . . . . | 509 |
| | 511 |
| | 513 |
| | 516 |
| 8T-1887 . . . . . | 440 |
| | 452 |
| | 472 |
| 8T-1888 . . . . . | 440 |
| | 452 |
| | 472 |
| 8T-1889 . . . . . | 408 |
| | 412 |
| | 417 |
| | 420 |
| | 424 |
| | 428 |
| | 432 |
| | 436 |
| | 441 |
| | 497 |
| | 499 |
| | 502 |
| | 505 |
| 8T-1890 . . . . . | 409 |
| | 412 |
| | 417 |
| | 420 |
| | 424 |
| | 428 |
| | 432 |
| | 436 |
| | 441 |
| | 497 |
| | 499 |
| | 502 |
| | 505 |
| 8T-1891 . . . . . | 459 |
| | 466 |
| | 468 |
| | 470 |
| 8T-1892 . . . . . | 459 |
| | 466 |
| | 468 |
| | 470 |
| 8T-2193 . . . . . | 254 |
| 8T-2360 . . . . . | 305 |
| | 559 |
| | 561 |
| | 563 |
| | 565 |
| | 567 |
| | 569 |
| | 571 |
| | 573 |
| | 575 |
| | 577 |
| 8T-2361 . . . . . | 559 |
| | 561 |
| | 563 |
| | 565 |
| | 567 |
| | 569 |
| | 571 |
| | 573 |
| | 575 |
| | 577 |
| 8T-2530 . . . . . | 459 |
| 8T-2563 . . . . . | 73 |
| 8T-2658 . . . . . | 196 |
| 8T-2659 . . . . . | 183 |
| | 185 |
| | 187 |
| | 203 |
| | 758 |
| 8T-2910 . . . . . | 306 |
| 8T-3001 . . . . . | 455 |
| 8T-3444 . . . . . | 466 |
| | 468 |
| | 470 |
| | 472 |
| 8T-3490 . . . . . | 51 |
| | 83 |
| | 308 |
| | 336 |
| | 338 |
| | 408 |
| | 416 |
| | 454 |
| | 462 |
| | 479 |
| | 603 |
| | 749 |
| 8T-3612 . . . . . | 86 |
| | 100 |
| | 308 |
| | 336 |
| | 603 |
| | 731 |
| | 733 |
| 8T-3647 . . . . . | 716 |
| 8T-3652 . . . . . | 326 |
| | 329 |
| 8T-3851 . . . . . | 586 |
| 8T-3998 . . . . . | 719 |
| | 720 |
| | 723 |
| | 726 |
| 8T-4001 . . . . . | 313 |
| | 314 |
| | 315 |
| | 320 |
| | 324 |
| 8T-4121 . . . . . | 41 |
| | 42 |
| | 59 |
| | 77 |
| | 83 |
| | 90 |
| | 99 |
| | 106 |
| | 146 |
| | 149 |
| | 152 |
| | 155 |
| | 158 |
| | 166 |
| | 173 |
| | 178 |
| | 189 |
| | 199 |
| | 203 |
| | 232 |
| | 233 |
| | 297 |
| | 298 |
| | 300 |
| | 308 |
| | 317 |
| | 318 |
| | 320 |
| | 326 |
| | 329 |
| | 334 |
| | 335 |
| | 336 |
| | 342 |
| | 343 |
| | 352 |
| | 354 |
| | 356 |
| | 359 |
| | 361 |
| | 362 |
| | 365 |
| | 367 |
| | 398 |
| | 400 |
| | 402 |
| | 404 |
| | 405 |
| | 407 |
| | 409 |
| | 412 |
| | 417 |
| | 420 |
| | 424 |
| | 428 |
| | 432 |
| | 436 |
| | 440 |
| | 441 |
| | 446 |
| | 448 |
| | 450 |
| | 452 |
| | 455 |
| | 459 |
| | 462 |
| | 464 |
| | 466 |
| | 468 |
| | 470 |
| | 472 |
| | 474 |
| | 477 |
| | 479 |
| | 487 |
| | 497 |
| | 499 |
| | 502 |
| | 505 |
| | 509 |
| | 511 |
| | 513 |
| | 516 |
| | 519 |
| | 521 |
| | 525 |
| | 526 |
| | 529 |
| | 530 |
| | 531 |
| | 532 |
| | 539 |
| | 715 |
| | 729 |
| | 747 |


► **PRIMARY REFERENCE**

# PART NUMBER INDEX


| Part | Page |
|---|---|
| | 749 |
| | 751 |
| | 752 |
| | 776 |
| | 785 |
| 8T-4122 . . . . . | 317 |
| | 318 |
| | 320 |
| | 528 |
| | 598 |
| | 609 |
| | 611 |
| | 683 |
| | 684 |
| 8T-4123 . . . . . | 312 |
| | 313 |
| | 314 |
| | 315 |
| 8T-4131 . . . . . | 237 |
| 8T-4132 . . . . . | 41 |
| | 42 |
| | 320 |
| | 598 |
| 8T-4133 . . . . . | 51 |
| | 67 |
| | 70 |
| | 83 |
| | 104 |
| | 106 |
| | 110 |
| | 118 |
| | 119 |
| | 133 |
| | 136 |
| | 138 |
| | 166 |
| | 173 |
| | 178 |
| | 185 |
| | 199 |
| | 203 |
| | 225 |
| | 292 |
| | 316 |
| | 326 |
| | 329 |
| | 336 |
| | 352 |
| | 354 |
| | 356 |
| | 359 |
| | 361 |
| | 362 |
| | 365 |
| | 367 |
| | 409 |
| | 412 |
| | 417 |
| | 420 |
| | 424 |
| | 428 |
| | 432 |
| | 436 |
| | 446 |
| | 448 |

| Part | Page |
|---|---|
| | 455 |
| | 459 |
| | 474 |
| | 715 |
| | 745 |
| | 749 |
| 8T-4136 . . . . . | 51 |
| | 59 |
| | 61 |
| | 77 |
| | 83 |
| | 99 |
| | 189 |
| | 199 |
| | 232 |
| | 233 |
| | 297 |
| | 298 |
| | 300 |
| | 308 |
| | 326 |
| | 329 |
| | 336 |
| | 342 |
| | 343 |
| | 398 |
| | 400 |
| | 402 |
| | 404 |
| | 405 |
| | 407 |
| | 409 |
| | 412 |
| | 417 |
| | 420 |
| | 424 |
| | 428 |
| | 432 |
| | 436 |
| | 446 |
| | 448 |
| | 450 |
| | 455 |
| | 459 |
| | 462 |
| | 464 |
| | 466 |
| | 468 |
| | 470 |
| | 472 |
| | 479 |
| | 502 |
| | 505 |
| | 509 |
| | 511 |
| | 513 |
| | 516 |
| | 519 |
| | 521 |
| | 524 |
| | 529 |
| | 530 |
| | 531 |
| | 532 |
| | 539 |

| Part | Page |
|---|---|
| | 749 |
| 8T-4137 . . . . . | 59 |
| | 61 |
| | 104 |
| | 106 |
| | 110 |
| | 146 |
| | 149 |
| | 152 |
| | 155 |
| | 158 |
| | 189 |
| | 203 |
| | 320 |
| | 334 |
| | 335 |
| | 336 |
| | 409 |
| | 412 |
| | 417 |
| | 420 |
| | 440 |
| | 441 |
| | 446 |
| | 448 |
| | 452 |
| | 455 |
| | 459 |
| | 462 |
| | 464 |
| | 477 |
| | 479 |
| | 487 |
| | 497 |
| | 499 |
| | 513 |
| | 516 |
| | 521 |
| | 539 |
| | 729 |
| | 747 |
| | 749 |
| | 751 |
| | 752 |
| | 776 |
| 8T-4138 . . . . . | 78 |
| | 79 |
| | 86 |
| | 144 |
| | 161 |
| | 189 |
| | 214 |
| | 292 |
| | 333 |
| | 336 |
| | 352 |
| | 354 |
| | 791 |
| 8T-4139 . . . . . | 326 |
| | 329 |
| | 409 |
| | 412 |
| | 417 |
| | 420 |
| | 424 |

| Part | Page |
|---|---|
| | 429 |
| | 432 |
| | 437 |
| | 441 |
| | 487 |
| | 502 |
| | 505 |
| | 539 |
| | 775 |
| 8T-4167 . . . . . | 313 |
| | 314 |
| | 315 |
| | 320 |
| | 324 |
| 8T-4171 . . . . . | 199 |
| | 687 |
| | 731 |
| | 733 |
| | 784 |
| 8T-4172 . . . . . | 352 |
| | 354 |
| 8T-4174 . . . . . | 41 |
| | 42 |
| | 320 |
| 8T-4176 . . . . . | 586 |
| 8T-4179 . . . . . | 90 |
| | 176 |
| | 199 |
| | 539 |
| | 609 |
| | 611 |
| | 809 |
| 8T-4180 . . . . . | 731 |
| | 733 |
| 8T-4181 . . . . . | 731 |
| | 733 |
| 8T-4182 . . . . . | 336 |
| | 479 |
| | 695 |
| | 696 |
| 8T-4183 . . . . . | 100 |
| | 306 |
| | 307 |
| | 308 |
| | 331 |
| | 479 |
| | 526 |
| 8T-4184 . . . . . | 412 |
| | 420 |
| | 424 |
| | 429 |
| | 432 |
| | 437 |
| | 502 |
| | 505 |
| | 609 |
| | 611 |
| 8T-4185 . . . . . | 526 |
| | 715 |
| 8T-4186 . . . . . | 67 |
| | 70 |
| | 365 |
| | 367 |
| | 525 |
| | 526 |

# PART NUMBER INDEX


| Part | Page |
|---|---|
| | 715 |
| 8T-4189 . . . . . | 59 |
| | 61 |
| | 73 |
| | 100 |
| | 189 |
| | 292 |
| | 297 |
| | 298 |
| | 306 |
| | 307 |
| | 319 |
| | 338 |
| | 474 |
| | 479 |
| | 707 |
| | 709 |
| | 712 |
| | 747 |
| | 749 |
| | 752 |
| 8T-4191 . . . . . | 185 |
| | 322 |
| | 323 |
| | 336 |
| | 539 |
| 8T-4192 . . . . . | 59 |
| | 61 |
| | 466 |
| | 468 |
| | 470 |
| | 472 |
| | 609 |
| | 611 |
| 8T-4193 . . . . . | 598 |
| | 605 |
| 8T-4195 . . . . . | 51 |
| | 83 |
| | 173 |
| | 203 |
| | 317 |
| | 318 |
| | 326 |
| | 329 |
| | 352 |
| | 354 |
| | 356 |
| | 359 |
| | 365 |
| | 367 |
| | 409 |
| | 412 |
| | 417 |
| | 420 |
| | 424 |
| | 429 |
| | 432 |
| | 437 |
| | 455 |
| | 459 |
| | 462 |
| | 474 |
| | 479 |
| | 502 |
| | 505 |

| Part | Page |
|---|---|
| | 519 |
| | 521 |
| | 715 |
| | 745 |
| | 749 |
| 8T-4196 . . . . . | 41 |
| | 42 |
| | 99 |
| | 336 |
| | 455 |
| | 519 |
| 8T-4198 . . . . . | 525 |
| 8T-4199 . . . . . | 195 |
| 8T-4200 . . . . . | 65 |
| | 66 |
| | 69 |
| | 72 |
| | 100 |
| | 231 |
| | 292 |
| | 306 |
| | 307 |
| | 707 |
| | 709 |
| | 716 |
| | 763 |
| | 765 |
| | 768 |
| | 791 |
| 8T-4201 . . . . . | 785 |
| 8T-4205 . . . . . | 78 |
| | 79 |
| | 86 |
| | 131 |
| | 161 |
| | 164 |
| | 189 |
| | 199 |
| | 214 |
| | 292 |
| | 316 |
| | 333 |
| | 338 |
| | 363 |
| | 364 |
| | 700 |
| | 743 |
| | 761 |
| | 776 |
| | 785 |
| | 797 |
| 8T-4222 . . . . . | 67 |
| | 70 |
| | 317 |
| | 318 |
| | 336 |
| 8T-4223 . . . . . | 59 |
| | 61 |
| | 90 |
| | 100 |
| | 104 |
| | 106 |
| | 176 |
| | 199 |
| | 226 |

| Part | Page |
|---|---|
| | 232 |
| | 233 |
| | 241 |
| | 245 |
| | 246 |
| | 306 |
| | 307 |
| | 308 |
| | 331 |
| | 359 |
| | 409 |
| | 412 |
| | 417 |
| | 420 |
| | 424 |
| | 429 |
| | 432 |
| | 437 |
| | 441 |
| | 466 |
| | 468 |
| | 470 |
| | 472 |
| | 479 |
| | 487 |
| | 502 |
| | 505 |
| | 524 |
| | 526 |
| | 539 |
| | 609 |
| | 611 |
| | 715 |
| | 775 |
| | 791 |
| | 809 |
| 8T-4224 . . . . . | 56 |
| | 57 |
| | 69 |
| | 72 |
| | 73 |
| | 86 |
| | 100 |
| | 144 |
| | 189 |
| | 195 |
| | 199 |
| | 231 |
| | 291 |
| | 292 |
| | 295 |
| | 297 |
| | 298 |
| | 299 |
| | 306 |
| | 307 |
| | 326 |
| | 329 |
| | 336 |
| | 338 |
| | 356 |
| | 452 |
| | 474 |
| | 477 |
| | 487 |

| Part | Page |
|---|---|
| | 513 |
| | 516 |
| | 529 |
| | 532 |
| | 541 |
| | 715 |
| | 752 |
| | 758 |
| 8T-4244 . . . . . | 225 |
| | 409 |
| | 412 |
| | 417 |
| | 420 |
| | 424 |
| | 429 |
| | 432 |
| | 437 |
| | 715 |
| | 809 |
| 8T-4649 . . . . . | 320 |
| 8T-4742 . . . . . | 86 |
| | 350 |
| | 351 |
| | 746 |
| 8T-4744 . . . . . | 86 |
| | 350 |
| | 351 |
| | 746 |
| 8T-4753 . . . . . | 128 |
| 8T-4773 . . . . . | 352 |
| | 354 |
| | 356 |
| | 359 |
| | 361 |
| | 362 |
| 8T-4778 . . . . . | 318 |
| 8T-4779 . . . . . | 317 |
| 8T-4815 . . . . . | 225 |
| | 352 |
| | 354 |
| | 356 |
| | 359 |
| | 361 |
| | 362 |
| | 365 |
| | 367 |
| 8T-4821 . . . . . | 326 |
| | 329 |
| 8T-4837 . . . . . | 326 |
| | 329 |
| 8T-4908 . . . . . | 56 |
| | 57 |
| | 67 |
| | 70 |
| | 86 |
| | 195 |
| | 326 |
| | 329 |
| | 715 |
| | 758 |
| 8T-4956 . . . . . | 226 |
| | 232 |
| | 233 |
| | 245 |
| | 246 |


► PRIMARY REFERENCE

# PART NUMBER INDEX


| Part | Page |
|---|---|
| | 425 |
| | 429 |
| | 433 |
| | 437 |
| 8T-4970 | 797 |
| 8T-4971 | 746 |
| | 785 |
| 8T-4985 | 195 |
| 8T-5001 | 588 |
| | 604 |
| | 613 |
| | 715 |
| 8T-5005 | 104 |
| | 106 |
| | 110 |
| | 120 |
| | 122 |
| | 124 |
| | 126 |
| | 398 |
| | 400 |
| 8T-5027 | 161 |
| 8T-5041 | 237 |
| 8T-5063 | 225 |
| 8T-5091 | 338 |
| 8T-5092 | 326 |
| | 329 |
| 8T-5093 | 133 |
| | 136 |
| | 138 |
| | 140 |
| | 142 |
| 8T-5439 | 237 |
| | 276 |
| | 277 |
| | 278 |
| | 280 |
| | 283 |
| | 284 |
| 8T-6356 | 479 |
| 8T-6431 | 365 |
| | 367 |
| 8T-6451 | 451 |
| 8T-6466 | 61 |
| | 352 |
| | 354 |
| | 452 |
| 8T-6656 | 808 |
| 8T-6684 | 441 |
| | 479 |
| 8T-6696 | 455 |
| 8T-6726 | 80 |
| | 81 |
| | 82 |
| | 448 |
| | 450 |
| | 454 |
| | 458 |
| | 519 |
| 8T-6760 | 221 |
| 8T-6868 | 232 |
| | 233 |
| 8T-6869 | 299 |
| | 514 |
| | 517 |
| 8T-6870 | 529 |
| | 532 |
| 8T-6902 | 338 |
| | 761 |
| 8T-6904 | 338 |
| 8T-6912 | 455 |
| | 459 |
| 8T-7087 | 502 |
| | 505 |
| 8T-7329 | 452 |
| 8T-7338 | 528 |
| | 609 |
| | 611 |
| 8T-7529 | 59 |
| | 61 |
| | 479 |
| 8T-7547 | 73 |
| | 292 |
| | 336 |
| | 356 |
| 8T-7566 | 768 |
| 8T-7876 | 54 |
| 8T-7963 | 108 |
| | 306 |
| | 307 |
| | 452 |
| | 455 |
| | 459 |
| 8T-7971 | 609 |
| | 611 |
| 8T-8390 | 376 |
| 8T-8549 | 237 |
| 8T-8641 | 702 |
| 8T-8729 | 217 |
| | 264 |
| | 391 |
| | 567 |
| 8T-8730 | 112 |
| 8T-8737 | 120 |
| | 122 |
| | 124 |
| | 126 |
| | 133 |
| | 136 |
| | 138 |
| | 146 |
| | 149 |
| | 152 |
| | 155 |
| | 158 |
| | 165 |
| | 189 |
| | 198 |
| | 203 |
| | 263 |
| | 264 |
| | 265 |
| | 754 |
| 8T-8799 | 189 |
| 8T-8894 | 297 |
| | 298 |
| | 326 |
| | 329 |
| 8T-9364 | 778 |
| 8T-9402 | 80 |
| | 82 |
| 8T-9405 | 528 |
| 8T-9501 | 226 |
| | 338 |
| | 359 |
| | 763 |
| | 765 |
| 8T-9530 | 17 |
| | 18 |
| | 19 |
| 8T-9655 | 115 |
| 8U-6970 | 329 |
| 8W-4002 | 458 |
| 8X-5489 | 86 |
| 8X-5561 | 454 |
| 8Y-4489 | 588 |
| | 592 |
| 8Y-5737 | 698 |
| | 741 |
| 8Y-5904 | ►702 |
| | 763 |
| | 765 |
| | 767 |
| 8Y-5906 | 702 |
| 8Y-5988 | 702 |
| 8Y-6028 | 702 |
| 8Y-6364 | 802 |
| | 803 |
| 8Y-6386 | 731 |
| | 733 |
| 8Y-6388 | 717 |
| | 718 |
| 8Y-6967 | 698 |
| 8Y-7203 | 326 |
| | 329 |
| 8Y-7204 | 326 |
| | 329 |
| 8Y-7263 | 733 |
| 8Y-7264 | 731 |
| 8Y-7287 | 793 |
| | 795 |
| 8Y-7306 | 731 |
| | 733 |
| 8Y-7309 | 709 |
| | 787 |
| | 789 |
| 8Y-7310 | 731 |
| | 733 |
| 8Y-7444 | 707 |
| | 709 |
| 8Y-7833 | 173 |
| | 176 |
| 8Y-8081 | 104 |
| | 106 |
| | 108 |
| | 110 |
| 8Y-8674 | 497 |
| | 499 |
| 8Y-8675 | 497 |
| | 499 |
| 9B-7233 | 185 |
| | 187 |
| | 781 |
| | 782 |
| 9C-4457 | 778 |
| 9C-8895 | 324 |
| 9F-2167 | 220 |
| 9F-2247 | 96 |
| 9G-3695 | 755 |
| 9G-8909 | 110 |
| 9G-9155 | 539 |
| 9J-1874 | 711 |
| 9K-5635 | 298 |
| 9M-0164 | 539 |
| 9M-1974 | 248 |
| 9M-2307 | 128 |
| 9M-4814 | 747 |
| | 749 |
| 9M-4972 | 749 |
| 9M-6738 | 454 |
| | 497 |
| | 499 |
| 9M-7958 | 51 |
| 9M-7959 | 698 |
| | 741 |
| 9M-8406 | 300 |
| | 474 |
| | 477 |
| | 747 |
| | 749 |
| 9N-0869 | 115 |
| 9P-1872 | 232 |
| | 233 |
| 9P-6571 | 719 |
| | 720 |
| | 723 |
| | 726 |
| 9P-9150 | 248 |
| | 254 |
| 9R-0109 | 586 |
| | 590 |
| | 686 |
| | 689 |
| 9R-0111 | 586 |
| | 621 |
| | 622 |
| | 666 |
| | 667 |
| | 668 |
| | 669 |
| 9R-0119 | 586 |
| 9R-0139 | 376 |
| | 385 |
| | 592 |
| | 613 |
| 9R-0147 | 594 |
| 9R-0153 | 381 |
| | 388 |
| 9R-0158 | 586 |
| | 594 |
| | 596 |
| | 639 |
| | 640 |
| | 642 |
| | 663 |
| | 664 |


9

► PRIMARY REFERENCE

# PART NUMBER INDEX


| Part | Page |
|---|---|
| | 665 |
| | 690 |
| | 691 |
| | 692 |
| 9R-0162 . . . . . | 372 |
| | 374 |
| | 594 |
| | 596 |
| | 609 |
| | 613 |
| | 626 |
| | 627 |
| | 628 |
| | 629 |
| | 631 |
| | 632 |
| | 633 |
| | 634 |
| | 635 |
| | 636 |
| | 637 |
| | 638 |
| | 644 |
| | 645 |
| | 646 |
| | 647 |
| | 649 |
| | 650 |
| | 651 |
| | 652 |
| | 653 |
| | 654 |
| | 655 |
| | 656 |
| | 657 |
| | 659 |
| | 660 |
| | 661 |
| | 662 |
| 9R-0320 . . . . . | 625 |
| | 630 |
| | 641 |
| | 643 |
| | 648 |
| | 658 |
| 9R-0321 . . . . . | 381 |
| | 388 |
| 9R-0336 . . . . . | 621 |
| | 622 |
| 9R-0343 . . . . . | 621 |
| | 622 |
| 9R-0366 . . . . . | 324 |
| | 326 |
| | 329 |
| 9R-0371 . . . . . | 621 |
| | 622 |
| 9R-0372 . . . . . | 621 |
| | 622 |
| 9R-0376 . . . . . | 622 |
| | 624 |
| 9R-0393 . . . . . | 320 |
| 9R-0394 . . . . . | 320 |
| 9R-0411 . . . . . | 586 |
| | 594 |
| | 596 |
| | 609 |
| | 611 |
| | 613 |
| 9R-0413 . . . . . | 324 |
| 9R-0418 . . . . . | 466 |
| | 468 |
| 9R-0481 . . . . . | 324 |
| 9R-0823 . . . . . | 220 |
| 9R-0868 . . . . . | ▶605 |
| 9R-0883 . . . . . | 220 |
| 9R-1004 . . . . . | 429 |
| | 437 |
| | 464 |
| | 502 |
| | 505 |
| 9R-1005 . . . . . | 429 |
| | 437 |
| | 464 |
| | 502 |
| | 505 |
| 9R-1034 . . . . . | 521 |
| 9R-1233 . . . . . | ▶331 |
| 9R-1496 . . . . . | 586 |
| | 623 |
| | 624 |
| | 670 |
| | 672 |
| | 674 |
| | 675 |
| 9R-1499 . . . . . | 146 |
| | 149 |
| | 152 |
| | 155 |
| | 158 |
| 9R-1502 . . . . . | 604 |
| | 613 |
| 9R-1510 . . . . . | 594 |
| | 596 |
| | 613 |
| | 639 |
| | 640 |
| | 642 |
| | 663 |
| | 664 |
| | 665 |
| | 690 |
| | 691 |
| 9R-1581 . . . . . | 225 |
| 9R-1765 . . . . . | 359 |
| 9R-1766 . . . . . | 226 |
| | 359 |
| 9R-1767 . . . . . | 226 |
| | 359 |
| 9R-1948 . . . . . | 783 |
| 9R-1975 . . . . . | 489 |
| | 491 |
| | 493 |
| | 495 |
| 9R-1976 . . . . . | 489 |
| | 491 |
| | 493 |
| | 495 |
| 9R-2004 . . . . . | 445 |
| | 497 |
| | 499 |
| 9R-2053 . . . . . | 509 |
| | 511 |
| | 513 |
| | 516 |
| 9R-2385 . . . . . | ▶129 |
| | 146 |
| | 149 |
| | 152 |
| | 155 |
| | 158 |
| 9R-2404 . . . . . | 344 |
| 9R-2407 . . . . . | 220 |
| 9R-2417 . . . . . | 220 |
| 9R-2418 . . . . . | 220 |
| 9R-2419 . . . . . | 220 |
| 9R-2420 . . . . . | 220 |
| 9R-2421 . . . . . | 220 |
| 9R-2424 . . . . . | 221 |
| 9R-2425 . . . . . | 220 |
| 9R-2426 . . . . . | 222 |
| 9R-2427 . . . . . | 220 |
| 9R-2428 . . . . . | 220 |
| 9R-2429 . . . . . | 220 |
| 9R-2430 . . . . . | 220 |
| 9R-2431 . . . . . | 220 |
| 9R-2432 . . . . . | 220 |
| 9R-2433 . . . . . | 220 |
| 9R-2434 . . . . . | 220 |
| 9R-2435 . . . . . | 222 |
| 9R-2436 . . . . . | 222 |
| 9R-2437 . . . . . | 222 |
| 9R-2438 . . . . . | 222 |
| 9R-2439 . . . . . | 222 |
| 9R-2440 . . . . . | 222 |
| 9R-2441 . . . . . | 222 |
| 9R-2442 . . . . . | 222 |
| 9R-2443 . . . . . | 222 |
| 9R-2444 . . . . . | 222 |
| 9R-2445 . . . . . | 222 |
| 9R-2446 . . . . . | 220 |
| 9R-2447 . . . . . | 220 |
| 9R-2448 . . . . . | 220 |
| 9R-2449 . . . . . | 220 |
| 9R-2450 . . . . . | 220 |
| 9R-2451 . . . . . | 220 |
| 9R-2452 . . . . . | 220 |
| 9R-2453 . . . . . | 220 |
| 9R-2454 . . . . . | 220 |
| 9R-2455 . . . . . | 220 |
| 9R-2456 . . . . . | 220 |
| 9R-2457 . . . . . | 220 |
| 9R-2458 . . . . . | 220 |
| 9R-2459 . . . . . | 220 |
| 9R-2460 . . . . . | 221 |
| 9R-2466 . . . . . | 222 |
| 9R-2474 . . . . . | 221 |
| 9R-2480 . . . . . | 221 |
| 9R-2482 . . . . . | 221 |
| 9R-2483 . . . . . | 221 |
| 9R-2484 . . . . . | 221 |
| 9R-2485 . . . . . | 221 |
| 9R-2486 . . . . . | 221 |
| 9R-2487 . . . . . | 222 |
| 9R-2488 . . . . . | 221 |
| 9R-2489 . . . . . | 221 |
| 9R-2490 . . . . . | 221 |
| 9R-2491 . . . . . | 221 |
| 9R-2492 . . . . . | 221 |
| 9R-2493 . . . . . | 221 |
| 9R-2494 . . . . . | 221 |
| 9R-2495 . . . . . | 221 |
| 9R-2496 . . . . . | 221 |
| 9R-2497 . . . . . | 221 |
| 9R-2498 . . . . . | 221 |
| 9R-2499 . . . . . | 221 |
| 9R-2501 . . . . . | 221 |
| 9R-2502 . . . . . | 221 |
| 9R-2503 . . . . . | 221 |
| 9R-2504 . . . . . | 221 |
| 9R-2505 . . . . . | 221 |
| 9R-2506 . . . . . | 221 |
| 9R-2507 . . . . . | 221 |
| 9R-2508 . . . . . | 221 |
| 9R-2512 . . . . . | 221 |
| 9R-2672 . . . . . | 408 |
| | 416 |
| 9R-2806 . . . . . | 225 |
| | 291 |
| | 354 |
| 9R-2807 . . . . . | 225 |
| | 291 |
| | 292 |
| | 354 |
| 9R-2821 . . . . . | 586 |
| 9R-2958 . . . . . | 609 |
| | 611 |
| 9R-2959 . . . . . | 609 |
| | 611 |
| 9R-3051 . . . . . | 225 |
| 9R-3092 . . . . . | 594 |
| 9R-3203 . . . . . | 784 |
| 9R-3204 . . . . . | 784 |
| 9R-3205 . . . . . | 784 |
| 9R-3469 . . . . . | 785 |
| 9R-3712 . . . . . | ▶466 |
| | 616 |
| 9R-4066 . . . . . | 586 |
| | 590 |
| | 591 |
| 9R-4110 . . . . . | 324 |
| 9R-4485 . . . . . | 621 |
| | 622 |
| 9R-4486 . . . . . | 621 |
| | 622 |
| 9R-4619 . . . . . | 440 |
| | 451 |
| 9R-4668 . . . . . | ▶527 |
| | 615 |
| | 616 |
| | 618 |
| | 619 |
| | 620 |
| 9R-4670 . . . . . | 668 |
| | 669 |
| | 670 |
| | 672 |
| 9R-4672 . . . . . | 622 |
| | 624 |
| | 668 |
| | 669 |


▶ PRIMARY REFERENCE

# PART NUMBER INDEX


| Part | Page |
|---|---|
| | 670 |
| | 672 |
| 9R-4675 | 666 |
| | 667 |
| | 668 |
| | 669 |
| | 670 |
| | 672 |
| | 674 |
| | 675 |
| 9R-4676 | 666 |
| | 667 |
| | 668 |
| | 669 |
| | 670 |
| | 672 |
| | 674 |
| | 675 |
| 9R-4677 | 527 |
| 9R-4678 | 527 |
| 9R-5202 | ▶621 |
| 9R-5205 | 621 |
| | 622 |
| | 623 |
| | 624 |
| 9R-5206 | 621 |
| | 622 |
| | 623 |
| | 624 |
| 9R-5219 | 220 |
| 9R-5271 | 670 |
| | 672 |
| | 674 |
| | 675 |
| 9R-5294 | 666 |
| | 667 |
| | 668 |
| | 669 |
| | 670 |
| | 672 |
| | 674 |
| | 675 |
| 9R-5301 | 586 |
| | 599 |
| | 600 |
| | 601 |
| | 602 |
| 9R-5313 | 621 |
| | 623 |
| | 666 |
| | 667 |
| | 674 |
| | 675 |
| 9R-5320 | ▶683 |
| 9R-5321 | ▶684 |
| 9R-5386 | 324 |
| 9R-5387 | 324 |
| 9R-5429 | 326 |
| | 329 |
| 9R-5437 | 326 |
| | 329 |
| 9R-5567 | 225 |
| 9R-5616 | 707 |
| | 709 |
| 9R-5786 | 666 |

| Part | Page |
|---|---|
| | 667 |
| | 674 |
| | 675 |
| 9R-5788 | ▶468 |
| | 615 |
| 9R-5832 | 621 |
| | 623 |
| 9R-5866 | ▶697 |
| 9R-5948 | 441 |
| | 451 |
| | 454 |
| | 501 |
| | 502 |
| | 505 |
| | 519 |
| 9R-5971 | 466 |
| 9R-5989 | ▶622 |
| 9R-6014 | 590 |
| 9R-6140 | 600 |
| 9R-6162 | 690 |
| 9R-6163 | 604 |
| 9R-6247 | 136 |
| | 138 |
| | 140 |
| | 142 |
| | 146 |
| | 149 |
| | 152 |
| | 155 |
| | 158 |
| 9R-6481 | 277 |
| 9R-6602 | 222 |
| 9R-6671 | 221 |
| 9R-6690 | 586 |
| 9R-6785 | 606 |
| 9R-7069 | 458 |
| 9R-7070 | 450 |
| 9R-7071 | 450 |
| 9R-7092 | 324 |
| 9R-7138 | 292 |
| 9R-7215 | 384 |
| 9R-7240 | 101 |
| 9R-7701 | 324 |
| 9R-7803 | 446 |
| | 448 |
| | 450 |
| | 455 |
| | 459 |
| | 462 |
| | 519 |
| | 521 |
| 9R-7882 | 326 |
| | 329 |
| 9R-7891 | 611 |
| 9R-7902 | 662 |
| 9R-7960 | 372 |
| 9R-8189 | 292 |
| 9R-8291 | 326 |
| | 329 |
| 9R-8390 | 586 |
| 9R-8523 | 588 |
| 9R-8594 | 326 |
| | 329 |
| 9R-8599 | 326 |
| | 329 |

| Part | Page |
|---|---|
| 9R-8663 | 613 |
| 9R-8760 | 326 |
| | 329 |
| 9R-8874 | 529 |
| | 532 |
| 9R-8875 | 529 |
| | 532 |
| 9R-8987 | 630 |
| | 631 |
| | 632 |
| | 633 |
| | 634 |
| | 635 |
| | 636 |
| | 637 |
| | 638 |
| 9R-8988 | 630 |
| | 631 |
| | 632 |
| | 633 |
| | 634 |
| | 635 |
| | 636 |
| | 637 |
| | 638 |
| 9R-9028 | 601 |
| | 602 |
| 9R-9105 | 596 |
| | 692 |
| 9R-9187 | 592 |
| 9R-9198 | 458 |
| | 462 |
| | 521 |
| 9R-9208 | 489 |
| | 491 |
| | 493 |
| | 495 |
| 9R-9209 | 489 |
| | 491 |
| | 493 |
| | 495 |
| 9R-9210 | 501 |
| 9R-9211 | 501 |
| 9R-9218 | 441 |
| | 502 |
| | 505 |
| 9R-9221 | 441 |
| | 502 |
| | 505 |
| 9R-9253 | 502 |
| | 505 |
| 9R-9254 | 592 |
| | 611 |
| 9R-9285 | 451 |
| 9R-9289 | 497 |
| | 499 |
| 9R-9290 | 497 |
| | 499 |
| 9R-9316 | 458 |
| | 521 |
| 9R-9319 | 462 |
| 9R-9334 | 292 |
| 9R-9375 | 458 |
| 9R-9398 | 221 |
| 9R-9401 | 221 |

| Part | Page |
|---|---|
| 9R-9403 | 221 |
| 9R-9408 | 220 |
| 9R-9409 | 220 |
| 9R-9410 | 220 |
| 9R-9505 | 386 |
| | 387 |
| 9R-9568 | 129 |
| 9R-9702 | 237 |
| 9R-9812 | 588 |
| 9R-9868 | 226 |
| | 359 |
| 9R-9869 | 320 |
| 9R-9901 | 352 |
| | 354 |
| | 356 |
| | 698 |
| | 741 |
| 9R-9925 | 539 |
| 9R-9926 | 502 |
| | 505 |
| 9R-9997 | 334 |
| 9R-9998 | 334 |
| 9R-9999 | 15 |
| | ▶334 |
| 9S-1315 | 600 |
| 9S-4183 | 404 |
| | 407 |
| | 530 |
| | 543 |
| 9S-4185 | 254 |
| | 509 |
| | 511 |
| | 513 |
| | 516 |
| 9S-4191 | 99 |
| | 102 |
| | 248 |
| | 255 |
| | 474 |
| 9S-8002 | 371 |
| | 579 |
| 9S-8004 | 371 |
| | 579 |
| 9S-8006 | 305 |
| | 371 |
| | 533 |
| | 559 |
| | 561 |
| | 563 |
| 9S-8007 | 579 |
| 9S-8009 | 565 |
| | 567 |
| | 569 |
| | 571 |
| | 573 |
| | 575 |
| | 577 |
| 9S-8752 | 547 |
| | 548 |
| | 549 |
| | 550 |
| | 551 |
| | 552 |
| | 553 |
| | 554 |


▶ PRIMARY REFERENCE

# PART NUMBER INDEX


| Part | Page |
|---|---|
| | 556 |
| | 557 |
| 9S-9334 | 305 |
| 9T-0637 | 545 |
| | 557 |
| 9T-0642 | 567 |
| | 571 |
| 9T-0644 | 567 |
| | 569 |
| | 571 |
| 9T-0655 | 305 |
| 9T-0656 | 305 |
| 9T-0704 | 559 |
| | 571 |
| 9T-0805 | 384 |
| 9T-2212 | 379 |
| | 382 |
| 9T-2883 | 386 |
| | 387 |
| 9T-4007 | 382 |
| 9T-4008 | 382 |
| 9T-4009 | 382 |
| 9T-5444 | 376 |
| 9T-5455 | 458 |
| | ►579 |
| 9T-7309 | 567 |
| | 569 |
| | 571 |
| 9U-2277 | 171 |
| | 203 |
| 9U-8263 | 776 |
| 9U-8875 | 255 |
| 9U-8886 | 248 |
| | 255 |
| | 528 |
| 9W-0607 | 118 |
| | 119 |
| | 133 |
| | 136 |
| | 138 |
| | 140 |
| | 142 |
| 9W-0717 | 254 |
| | 255 |
| | 256 |
| 9W-1880 | 638 |
| 9W-3324 | 120 |
| | 122 |
| | 124 |
| | 126 |
| 9W-4363 | 470 |
| 9W-5460 | 250 |
| | 254 |
| 9W-8215 | 684 |
| 9W-9953 | 41 |
| | 42 |
| 9X-0199 | 214 |
| 9X-1046 | 756 |
| 9X-1054 | 189 |
| 9X-1386 | 256 |
| 9X-1813 | 115 |
| 9X-2027 | 563 |
| 9X-2036 | 166 |
| 9X-2038 | 352 |
| | 354 |
| | 356 |
| | 719 |
| | 723 |
| | 726 |
| | 728 |
| | 730 |
| 9X-2040 | 509 |
| | 511 |
| | 514 |
| | 517 |
| 9X-2041 | 776 |
| 9X-2042 | 292 |
| | 320 |
| | 698 |
| | 730 |
| | 735 |
| | 737 |
| | 741 |
| 9X-2043 | 291 |
| | 363 |
| | 364 |
| 9X-2044 | 86 |
| | 171 |
| | 297 |
| | 298 |
| | 338 |
| | 698 |
| | 719 |
| | 720 |
| | 723 |
| | 726 |
| | 741 |
| | 783 |
| | 791 |
| 9X-2045 | 352 |
| | 354 |
| | 356 |
| | 698 |
| | 709 |
| | 728 |
| | 739 |
| | 740 |
| | 741 |
| | 758 |
| | 760 |
| | 776 |
| | 787 |
| | 789 |
| | 793 |
| | 795 |
| 9X-2065 | 361 |
| 9X-2092 | 712 |
| 9X-2132 | 791 |
| 9X-2334 | 806 |
| 9X-2842 | 761 |
| 9X-3401 | 138 |
| | 226 |
| 9X-3965 | 443 |
| | 444 |
| 9X-4244 | 118 |
| | 119 |
| | 120 |
| | 122 |
| | 124 |
| | 126 |
| 9X-4611 | 386 |
| | 387 |
| 9X-5617 | 112 |
| 9X-6165 | 171 |
| 9X-6383 | 791 |
| 9X-6562 | 804 |
| 9X-6579 | 429 |
| | 437 |
| | 505 |
| 9X-6615 | 250 |
| | 256 |
| 9X-6772 | 199 |
| 9X-7260 | 376 |
| 9X-7380 | 749 |
| 9X-7381 | 749 |
| 9X-7382 | 749 |
| 9X-7383 | 749 |
| 9X-7385 | 714 |
| 9X-8118 | 131 |
| | 132 |
| 9X-8121 | 131 |
| | 132 |
| 9X-8139 | 131 |
| | 132 |
| 9X-8256 | 176 |
| | 352 |
| | 354 |
| 9X-8257 | 41 |
| | 42 |
| | 245 |
| | 246 |
| | 336 |
| | 605 |
| 9X-8399 | 381 |
| 9X-8873 | 763 |
| | 765 |
| | 768 |
| 9X-8880 | 221 |
| 9X-8883 | 221 |
| 9X-9865 | 120 |
| | 122 |
| | 124 |
| | 126 |
| 9Y-5015 | 32 |
| **0** | |
| 004-6557 | 58 |
| 004-6810 | 58 |
| 005-0469 | 249 |
| 005-0471 | 249 |
| 009-2062 | 255 |
| 014-5645 | 250 |
| 030-1957 | 221 |
| 030-3239 | 324 |
| 031-0214 | 559 |
| | 561 |
| | 563 |
| | 565 |
| | 567 |
| | 569 |
| | 571 |
| | 573 |
| | 575 |
| | 577 |
| 031-4155 | 767 |
| | 770 |
| | 772 |
| 031-5085 | 559 |
| | 565 |
| | 573 |
| | 575 |
| | 577 |
| 032-1557 | 298 |
| 032-8487 | 61 |
| 032-9090 | 27 |
| 032-9091 | 27 |
| 033-6043 | 582 |
| 033-6044 | 581 |
| 033-6783 | 61 |
| 033-7687 | 35 |
| 034-1432 | 19 |
| | 590 |
| 034-3679 | 300 |
| 035-8017 | 93 |
| 035-8068 | 29 |
| 038-9317 | 104 |
| | 106 |
| | 110 |
| 039-9133 | 295 |
| 061-8639 | 262 |
| | 263 |
| | 264 |
| | 265 |
| 067-6002 | 29 |
| 067-6006 | 29 |
| | 32 |
| 067-6043 | 29 |
| 067-6095 | 50 |
| 067-6123 | 36 |
| 067-6179 | 37 |
| 067-6213 | 43 |
| 067-6264 | 93 |
| 067-6265 | 93 |
| 067-6366 | 103 |
| 067-6873 | 27 |
| 067-6874 | 27 |
| 067-6897 | 37 |
| 067-6899 | 37 |
| 067-6900 | 37 |
| 067-6999 | 93 |
| 069-4080 | 99 |
| 069-4707 | 218 |
| 081-6352 | 455 |
| | 459 |
| 082-2817 | 804 |
| 083-4419 | 533 |
| 084-4277 | 776 |
| 090-5725 | 474 |
| 091-5928 | 677 |
| | 682 |
| 092-2992 | 129 |
| | ►130 |
| 092-3635 | 300 |
| 092-6279 | 130 |
| 095-0641 | 761 |
| 095-0733 | 198 |
| 095-0741 | 183 |
| | 185 |


► PRIMARY REFERENCE

# PART NUMBER INDEX


| Part | Page |
|---|---|
| | 187 |
| 095-0756 | 176 |
| 095-0878 | 767 |
| | 770 |
| | 772 |
| 095-0924 | 238 |
| 095-0927 | 248 |
| | 255 |
| 095-0928 | 255 |
| 095-9805 | 533 |
| 096-4415 | 203 |
| | 745 |
| 099-0492 | 183 |
| 099-3649 | 338 |
| **1** | |
| 100-3246 | 120 |
| | 122 |
| | 124 |
| | 126 |
| 100-3247 | 120 |
| | 122 |
| 100-3248 | 120 |
| | 124 |
| | 126 |
| 100-3249 | 122 |
| 100-3250 | 120 |
| | 122 |
| | 124 |
| | 126 |
| 100-3251 | 120 |
| | 122 |
| | 124 |
| | 126 |
| 100-3253 | 120 |
| | 122 |
| | 124 |
| | 126 |
| 100-3254 | 120 |
| | 122 |
| | 124 |
| | 126 |
| 100-3255 | 120 |
| | 122 |
| | 124 |
| | 126 |
| 100-3320 | 189 |
| 100-3563 | 561 |
| 100-3564 | 561 |
| 100-3566 | 561 |
| 100-3567 | 561 |
| | 569 |
| 100-3685 | 166 |
| 100-3751 | 37 |
| | 63 |
| 100-4112 | 166 |
| 100-4113 | 166 |
| 100-4115 | 166 |
| 100-4118 | 166 |
| 100-4119 | 166 |
| 100-4461 | 52 |
| 100-4830 | 39 |
| | 93 |
| | 96 |
| 100-4841 | 25 |
| | 29 |
| 100-7442 | 466 |
| 100-7443 | 468 |
| 100-7444 | 468 |
| 100-7608 | 787 |
| | 789 |
| | 793 |
| | 795 |
| 100-8451 | 103 |
| 101-0003 | 799 |
| 101-0333 | 806 |
| 101-0745 | 797 |
| 101-0862 | 502 |
| | 505 |
| 101-0863 | 408 |
| | 412 |
| | 416 |
| | 420 |
| | 424 |
| | 428 |
| | 432 |
| | 436 |
| | 806 |
| 101-1787 | 347 |
| 101-2788 | 806 |
| 101-2987 | 40 |
| 101-3617 | 36 |
| 101-3771 | 43 |
| 101-3895 | 54 |
| 101-4015 | 326 |
| | 329 |
| 101-4016 | 326 |
| | 329 |
| 101-4020 | 326 |
| 101-4411 | 687 |
| 101-4412 | 687 |
| 101-4413 | 687 |
| 101-4414 | 687 |
| 101-4415 | 18 |
| | 688 |
| 101-4416 | 332 |
| 101-4419 | 18 |
| | ►809 |
| 101-4420 | 809 |
| 101-4421 | 809 |
| 101-4422 | 809 |
| 101-4423 | 809 |
| 101-4424 | 809 |
| 101-4447 | 17 |
| | 18 |
| | ►342 |
| 101-4448 | ►128 |
| | 342 |
| | 343 |
| 101-4449 | 342 |
| | 343 |
| 101-4456 | 342 |
| 102-1940 | 326 |
| | 329 |
| 102-2940 | 797 |
| 102-3582 | 386 |
| | 387 |
| 102-4176 | 108 |
| 102-4560 | 324 |
| 102-8801 | 176 |
| | 180 |
| | 198 |
| | 754 |
| 102-8802 | 101 |
| | 115 |
| | 140 |
| | 142 |
| | 144 |
| | 171 |
| | 173 |
| | 176 |
| | 181 |
| | 189 |
| | 193 |
| | 196 |
| | 198 |
| | 203 |
| | 206 |
| | 208 |
| | 210 |
| | 212 |
| | 215 |
| | 217 |
| | 226 |
| | 256 |
| | 262 |
| | 263 |
| | 264 |
| | 265 |
| | 359 |
| | 487 |
| | 567 |
| | 569 |
| | 571 |
| | 584 |
| | 585 |
| 102-8803 | 115 |
| | 144 |
| | 165 |
| | 185 |
| | 187 |
| | 189 |
| | 195 |
| | 198 |
| | 203 |
| | 206 |
| | 208 |
| | 210 |
| | 212 |
| | 214 |
| | 263 |
| | 264 |
| | 265 |
| | 391 |
| | 392 |
| | 785 |
| 102-8804 | 115 |
| | 129 |
| | 133 |
| | 136 |
| | 138 |
| | 173 |
| | 176 |
| | 181 |
| | 185 |
| | 187 |
| | 193 |
| | 198 |
| | 206 |
| | 208 |
| | 210 |
| | 212 |
| 102-8805 | 120 |
| | 122 |
| | 124 |
| | 126 |
| | 133 |
| | 136 |
| | 138 |
| | 140 |
| | 142 |
| | 176 |
| | 181 |
| | 183 |
| | 198 |
| | 206 |
| | 208 |
| | 210 |
| | 212 |
| | 755 |
| | 797 |
| 102-8806 | 178 |
| | 198 |
| | 203 |
| | 753 |
| 102-8807 | 261 |
| 103-2532 | 804 |
| 103-4754 | 305 |
| 103-4867 | 225 |
| 103-5519 | 533 |
| | ►581 |
| 103-5520 | 533 |
| 104-2091 | 698 |
| | 717 |
| | 718 |
| | 721 |
| | 725 |
| | 738 |
| 104-3288 | 248 |
| | 255 |
| 104-3964 | 615 |
| | ►666 |
| 104-3965 | 615 |
| | ►667 |
| 104-3966 | 666 |
| 104-3967 | 666 |
| | 667 |
| 104-5255 | ►126 |
| | 152 |
| 104-6310 | 615 |
| | 616 |
| | 619 |
| | 685 |
| | ►686 |
| 104-6311 | 686 |
| 104-6312 | 686 |
| 104-6313 | 666 |
| | 669 |


► PRIMARY REFERENCE

# PART NUMBER INDEX


| Part | Page |
|---|---|
| | 670 |
| | 672 |
| | 675 |
| | 693 |
| 104-6314 . . . . . | 666 |
| | 669 |
| | 670 |
| | 672 |
| | 675 |
| | 693 |
| 104-6316 . . . . . | 686 |
| 104-6317 . . . . . | 686 |
| 104-9502 . . . . . | ▶163 |
| 104-9504 . . . . . | 163 |
| 105-1434 . . . . . | 581 |
| 105-1435 . . . . . | 581 |
| 105-1436 . . . . . | 581 |
| 105-1437 . . . . . | 581 |
| 105-1438 . . . . . | 581 |
| 105-1439 . . . . . | 581 |
| 105-1440 . . . . . | 581 |
| 105-1441 . . . . . | 581 |
| 105-2145 . . . . . | 582 |
| 105-3481 . . . . . | 763 |
| | 765 |
| | 767 |
| 105-8034 . . . . . | 292 |
| 105-8069 . . . . . | 133 |
| | 136 |
| | 138 |
| | 140 |
| | 142 |
| 105-9411 . . . . . | 749 |
| 106-0401 . . . . . | 370 |
| 106-0406 . . . . . | 370 |
| 106-0409 . . . . . | 408 |
| | 412 |
| | 416 |
| | 420 |
| | 424 |
| | 428 |
| | 432 |
| | 436 |
| 106-0421 . . . . . | 588 |
| 106-0827 . . . . . | 18 |
| | 19 |
| 106-0844 . . . . . | 502 |
| | 505 |
| 106-1251 . . . . . | 372 |
| | 374 |
| 106-2404 . . . . . | 17 |
| | ▶524 |
| 106-2405 . . . . . | 524 |
| 106-2409 . . . . . | 524 |
| 106-5813 . . . . . | 398 |
| | 400 |
| 106-5814 . . . . . | 398 |
| | 400 |
| 106-5876 . . . . . | 394 |
| | ▶462 |
| 106-5878 . . . . . | ▶312 |
| 106-5879 . . . . . | ▶313 |
| 106-5880 . . . . . | ▶314 |
| 106-5881 . . . . . | ▶315 |
| 106-8020 . . . . . | 102 |
| 106-8704 . . . . . | 173 |
| | 176 |
| | 181 |
| | 206 |
| | 208 |
| | 210 |
| | 212 |
| | 217 |
| 106-8835 . . . . . | 93 |
| 106-8916 . . . . . | 84 |
| 106-9387 . . . . . | 615 |
| | 616 |
| | 617 |
| | 618 |
| | 620 |
| 106-9388 . . . . . | 666 |
| | 669 |
| | 670 |
| | 672 |
| | 675 |
| | 693 |
| 106-9427 . . . . . | 579 |
| 106-9430 . . . . . | 579 |
| 106-9586 . . . . . | 248 |
| | 260 |
| 106-9861 . . . . . | 249 |
| | 254 |
| 107-2066 . . . . . | 584 |
| 107-5591 . . . . . | 226 |
| | 359 |
| 107-5605 . . . . . | 214 |
| 107-6696 . . . . . | 408 |
| | 412 |
| | 416 |
| | 420 |
| | 424 |
| | 428 |
| | 432 |
| | 436 |
| 107-6697 . . . . . | 329 |
| | 408 |
| | 416 |
| 107-6698 . . . . . | 408 |
| | 412 |
| | 416 |
| | 420 |
| | 424 |
| | 428 |
| | 432 |
| | 436 |
| 107-6699 . . . . . | 509 |
| | 511 |
| | 513 |
| | 516 |
| 107-6701 . . . . . | 408 |
| | 412 |
| | 416 |
| | 420 |
| | 424 |
| | 428 |
| | 432 |
| | 436 |
| 107-6707 . . . . . | 408 |
| | 412 |
| | 416 |
| | 420 |
| | 424 |
| | 428 |
| | 432 |
| | 436 |
| 107-6708 . . . . . | 408 |
| | 412 |
| | 416 |
| | 420 |
| | 424 |
| | 428 |
| | 432 |
| | 436 |
| 107-6709 . . . . . | 408 |
| | 412 |
| | 416 |
| | 420 |
| | 424 |
| | 428 |
| | 432 |
| | 436 |
| 107-6711 . . . . . | 592 |
| | 613 |
| 107-6715 . . . . . | 489 |
| | 491 |
| | 493 |
| | 495 |
| 107-6717 . . . . . | 408 |
| | 416 |
| | 424 |
| | 428 |
| | 432 |
| | 436 |
| | 505 |
| 107-6718 . . . . . | 408 |
| | 416 |
| | 424 |
| | 428 |
| | 432 |
| | 436 |
| | 505 |
| 107-6719 . . . . . | 428 |
| | 436 |
| | 505 |
| 107-6826 . . . . . | 241 |
| | 242 |
| | 243 |
| | 244 |
| 107-8117 . . . . . | 545 |
| | 546 |
| | 553 |
| 108-1587 . . . . . | 685 |
| | ▶693 |
| 108-2989 . . . . . | 603 |
| 108-3036 . . . . . | 616 |
| | ▶668 |
| 108-3037 . . . . . | 668 |
| | 669 |
| 108-3872 . . . . . | 408 |
| | 412 |
| | 416 |
| | 420 |
| | 424 |
| | 428 |
| | 432 |
| 108-4311 . . . . . | 707 |
| | 709 |
| 108-8251 . . . . . | 705 |
| | 706 |
| | ▶784 |
| 109-0533 . . . . . | 365 |
| | 367 |
| 109-1258 . . . . . | 529 |
| | 532 |
| 109-1259 . . . . . | 529 |
| | 532 |
| 109-1260 . . . . . | 408 |
| | 412 |
| | 416 |
| | 420 |
| | 424 |
| | 428 |
| | 432 |
| | 436 |
| 109-1583 . . . . . | 509 |
| | 511 |
| | 513 |
| | 516 |
| 109-1633 . . . . . | 487 |
| 109-1634 . . . . . | 487 |
| 109-9685 . . . . . | 575 |
| | 577 |
| 110-0037 . . . . . | 705 |
| | 706 |
| | 800 |
| 110-2445 . . . . . | 73 |
| | 479 |
| 110-2861 . . . . . | 666 |
| | 669 |
| | 670 |
| | 672 |
| | 675 |
| | 693 |
| 110-5602 . . . . . | 603 |
| | 791 |
| 110-6017 . . . . . | 16 |
| | ▶343 |
| 110-6109 . . . . . | 698 |
| | 741 |
| 111-0339 . . . . . | ▶586 |
| | 597 |
| 111-0394 . . . . . | 343 |
| 111-0483 . . . . . | 588 |
| 111-0859 . . . . . | 34 |
| 111-1374 . . . . . | 474 |
| 111-3422 . . . . . | 93 |
| | 96 |
| 111-3423 . . . . . | 93 |
| | 96 |
| 111-3798 . . . . . | 398 |
| | 400 |
| 111-4331 . . . . . | 586 |
| 111-4332 . . . . . | 586 |
| 111-4333 . . . . . | 586 |
| 111-4334 . . . . . | 586 |
| 111-4335 . . . . . | 586 |
| | 591 |
| 111-4336 . . . . . | 586 |
| 111-4337 . . . . . | 586 |


▶ PRIMARY REFERENCE

# PART NUMBER INDEX


| Part | Page |
|---|---|
| 111-4338 | 586 |
| 111-4339 | 689 |
| 111-4340 | 586 |
| 111-4341 | 586 |
| 111-4342 | 586 |
| 111-4343 | 586 |
| 111-4627 | 171 |
| 111-5042 | 778 |
| 111-6795 | 133 |
| 111-6816 | 133 |
| 111-7899 | 133 |
| | 136 |
| | 138 |
| | 140 |
| | 142 |
| | 144 |
| | 146 |
| | 149 |
| | 152 |
| | 155 |
| | 158 |
| | 173 |
| | 176 |
| | 178 |
| | 180 |
| | 181 |
| | 183 |
| | 185 |
| | 187 |
| | 193 |
| | 203 |
| | 206 |
| | 208 |
| | 210 |
| | 212 |
| | 217 |
| | 349 |
| | 397 |
| | 542 |
| | 543 |
| | 745 |
| 111-7906 | 231 |
| 111-7907 | ▶231 |
| | 247 |
| 111-8634 | ▶615 |
| 111-8635 | ▶615 |
| | 616 |
| 111-8636 | ▶615 |
| 111-8637 | ▶616 |
| 112-0938 | ▶616 |
| | 617 |
| 112-0939 | ▶616 |
| | 617 |
| 112-0940 | ▶617 |
| 112-0941 | ▶617 |
| 112-0942 | ▶685 |
| 112-0943 | 586 |
| 112-0950 | 586 |
| 112-1773 | 386 |
| | 387 |
| 112-1775 | 670 |
| | 672 |
| | 674 |
| | 675 |
| 112-1776 | 686 |
| 112-1777 | 669 |
| 112-1778 | 616 |
| | ▶669 |
| 112-1809 | ▶311 |
| 112-1826 | 396 |
| | 397 |
| | ▶528 |
| 112-1827 | 16 |
| | ▶597 |
| 112-1918 | 619 |
| | ▶670 |
| 112-1920 | ▶617 |
| 112-1922 | 619 |
| | 620 |
| | ▶672 |
| 112-1924 | 618 |
| | ▶674 |
| 112-1926 | 619 |
| | 620 |
| | ▶675 |
| 112-1931 | ▶623 |
| 112-1933 | ▶624 |
| 112-1937 | ▶617 |
| 112-1940 | ▶618 |
| 112-1941 | ▶618 |
| 112-4415 | 336 |
| 112-4416 | 336 |
| 112-4417 | 312 |
| | 313 |
| | 314 |
| | 315 |
| 112-4418 | 313 |
| | 314 |
| | 315 |
| 112-5823 | 446 |
| | 448 |
| | 454 |
| | 458 |
| 112-5827 | 446 |
| | 448 |
| | 454 |
| | 458 |
| 112-5830 | 454 |
| | 519 |
| 112-5833 | 454 |
| | 519 |
| 112-5841 | 464 |
| 112-5842 | 464 |
| 112-5844 | 448 |
| 112-5847 | 448 |
| 112-6403 | 392 |
| | ▶464 |
| 112-9450 | 785 |
| 112-9629 | 237 |
| 113-0018 | 18 |
| | 19 |
| | ▶801 |
| 113-0020 | 17 |
| | 18 |
| | ▶332 |
| 113-0081 | 17 |
| | ▶598 |
| 113-0920 | 776 |
| 113-1147 | 221 |
| 113-1150 | 241 |
| 113-1151 | 239 |
| | ▶241 |
| 113-2662 | 315 |
| 113-4495 | 311 |
| 113-5049 | 292 |
| 113-6349 | 103 |
| 113-7905 | 314 |
| 113-7906 | 313 |
| 113-8087 | 599 |
| 113-8129 | 63 |
| 113-8490 | 133 |
| | 138 |
| | 142 |
| | 173 |
| | 181 |
| | 202 |
| | 206 |
| | 208 |
| | 210 |
| | 212 |
| 113-8491 | 133 |
| | 136 |
| | 138 |
| | 140 |
| | 142 |
| 113-8492 | 178 |
| 113-9083 | 623 |
| | 624 |
| 113-9084 | 623 |
| | 624 |
| 113-9090 | 600 |
| 113-9221 | 245 |
| | 246 |
| 114-2579 | 76 |
| 114-3421 | 17 |
| | 18 |
| 114-3826 | 674 |
| | 675 |
| 114-3836 | 586 |
| 114-4363 | 36 |
| 114-4916 | 161 |
| | 164 |
| 114-4917 | 332 |
| 114-6099 | 324 |
| 114-8972 | 338 |
| 114-9262 | 675 |
| 114-9342 | 801 |
| 115-1162 | 76 |
| 115-1615 | 115 |
| | 189 |
| 115-1858 | 598 |
| 115-1918 | 528 |
| 116-1316 | 546 |
| | 556 |
| 116-4616 | 462 |
| 116-4617 | 462 |
| 116-4825 | 586 |
| 116-7491 | 183 |
| | 185 |
| | 187 |
| 117-0754 | 609 |
| | 611 |
| 117-2911 | 262 |
| | 263 |
| | 264 |
| | 265 |
| 117-3242 | 300 |
| 117-3534 | 528 |
| 117-3535 | 528 |
| 117-3789 | 727 |
| 117-4650 | 248 |
| 117-7414 | 707 |
| | 709 |
| 117-7520 | 466 |
| 117-9713 | 231 |
| 117-9887 | 241 |
| | 242 |
| | 243 |
| | 244 |
| 118-1345 | 670 |
| | 672 |
| 118-1348 | 586 |
| | 599 |
| 118-2228 | 544 |
| | 554 |
| 118-2990 | 320 |
| 118-4637 | 519 |
| 118-4638 | 519 |
| 118-4930 | ▶470 |
| | 619 |
| | 620 |
| 118-5503 | 721 |
| | 725 |
| 118-5837 | 220 |
| 118-5839 | 221 |
| 118-6842 | 306 |
| | 307 |
| | ▶316 |
| 118-6854 | 306 |
| | 307 |
| 118-7110 | 683 |
| 118-7286 | 59 |
| | 61 |
| 118-7790 | 214 |
| 118-8118 | 98 |
| 118-9039 | 448 |
| | 454 |
| 118-9117 | 221 |
| 118-9145 | 54 |
| 119-1530 | ▶694 |
| 119-2110 | 381 |
| 119-3662 | 189 |
| 119-4112 | ▶472 |
| | 618 |
| | 619 |
| | 620 |
| 119-4594 | 586 |
| | 689 |
| 119-4595 | 391 |
| | 392 |
| | ▶689 |
| 119-4740 | 247 |
| 119-5025 | 86 |
| 119-6723 | 78 |
| | 79 |
| 119-7771 | ▶272 |
| | 273 |
| 119-7772 | ▶272 |
| | 273 |
| 119-7773 | 268 |


▶ PRIMARY REFERENCE

# PART NUMBER INDEX


| Part | Page |
|---|---|
| | ►273 |
| 119-7776 | 272 |
| | 274 |
| | 275 |
| | 282 |
| | 285 |
| | 287 |
| | 288 |
| 119-7782 | 268 |
| | 269 |
| | ►273 |
| 119-7783 | ►273 |
| 119-7784 | 273 |
| | ►274 |
| 119-7785 | 273 |
| | 274 |
| | 281 |
| | 286 |
| | 288 |
| 119-8016 | ►104 |
| | 309 |
| | 310 |
| 119-8349 | 791 |
| 119-9398 | 529 |
| | 532 |
| 119-9399 | 529 |
| | 532 |
| 119-9631 | 700 |
| 120-0147 | 416 |
| | 420 |
| | 432 |
| | 436 |
| 120-1324 | 446 |
| 120-4397 | 529 |
| | 532 |
| 120-4553 | 470 |
| 120-4604 | 477 |
| 120-5724 | 536 |
| 120-5726 | 533 |
| | ►536 |
| 120-5727 | 533 |
| 120-5729 | 533 |
| 120-6872 | 88 |
| 120-8413 | 450 |
| 120-8414 | 450 |
| 120-9286 | 593 |
| 120-9289 | ►590 |
| | 694 |
| 120-9332 | 590 |
| | 591 |
| 120-9333 | 590 |
| | 591 |
| 120-9762 | 249 |
| | 254 |
| 120-9763 | 236 |
| 120-9809 | 446 |
| | 448 |
| | 455 |
| | 459 |
| 121-0694 | 249 |
| | 255 |
| 121-0697 | 248 |
| 121-0714 | 248 |
| 121-0883 | 36 |
| 121-0885 | 248 |
| 121-0904 | 248 |
| 121-1251 | 248 |
| 121-1253 | 248 |
| 121-2059 | 248 |
| | 255 |
| 121-2060 | 248 |
| | 255 |
| 121-2061 | 248 |
| | 255 |
| 121-2062 | 249 |
| 121-2500 | 249 |
| | 255 |
| 121-2511 | 249 |
| 121-2537 | 249 |
| 121-2545 | 249 |
| 121-2603 | 249 |
| 121-2604 | 249 |
| 121-4036 | 250 |
| | 254 |
| | ►261 |
| 121-6936 | 785 |
| 121-7385 | 250 |
| | 254 |
| 121-7389 | 250 |
| 121-7390 | 250 |
| 121-7391 | 249 |
| 121-7396 | 248 |
| | 254 |
| 121-7398 | 250 |
| | 254 |
| 121-7399 | 250 |
| | 254 |
| 121-7400 | 250 |
| | 254 |
| 121-7401 | 250 |
| | 254 |
| 121-7402 | 250 |
| | 254 |
| 121-7403 | 250 |
| 121-7404 | 250 |
| 121-7405 | 248 |
| 121-9743 | 791 |
| 121-9797 | 17 |
| | 18 |
| | ►599 |
| 121-9870 | 726 |
| 121-9875 | 249 |
| 122-0536 | 408 |
| | 412 |
| | 416 |
| | 420 |
| | 424 |
| | 428 |
| | 432 |
| | 436 |
| 122-0668 | 470 |
| 122-0669 | 470 |
| 122-1113 | 474 |
| 122-1135 | 261 |
| 122-1644 | ►195 |
| | 597 |
| 122-1645 | ►214 |
| 122-1647 | 195 |
| 122-1648 | 195 |
| 122-1672 | 261 |
| 122-1876 | 250 |
| 122-1877 | 248 |
| | 255 |
| 122-1878 | 248 |
| | 254 |
| 122-1879 | 248 |
| | 255 |
| 122-1880 | 249 |
| 122-1881 | 249 |
| 122-1882 | 249 |
| 122-1883 | 249 |
| | 256 |
| 122-1884 | 250 |
| | 255 |
| 122-1885 | 249 |
| 122-1886 | 250 |
| | 255 |
| 122-2050 | 161 |
| 122-2051 | 751 |
| 122-2052 | 751 |
| 122-2053 | 751 |
| 122-2054 | ►751 |
| 122-3649 | 249 |
| 122-3652 | 248 |
| 122-4870 | 454 |
| | 519 |
| 122-4871 | 454 |
| | 519 |
| 122-4872 | 446 |
| | 448 |
| | 454 |
| | 458 |
| 122-4873 | 446 |
| | 448 |
| | 454 |
| | 458 |
| 122-4954 | 586 |
| 122-5822 | 458 |
| | 521 |
| 122-5823 | 462 |
| 122-5865 | ►106 |
| | 309 |
| 122-5923 | 338 |
| 122-6785 | 250 |
| 122-6787 | 249 |
| | 254 |
| 122-7137 | 781 |
| | 782 |
| 122-8032 | 600 |
| 122-8037 | ►600 |
| 123-0275 | 78 |
| | 79 |
| 123-0428 | 336 |
| 123-0714 | 249 |
| 123-1377 | 249 |
| | 254 |
| 123-2918 | 250 |
| 123-2919 | 250 |
| 123-2920 | 249 |
| | 255 |
| 123-4065 | 65 |
| | 66 |
| | 69 |
| | 72 |
| | 336 |
| | 338 |
| 123-4202 | ►16 |
| 123-4950 | 102 |
| 123-6077 | 767 |
| | 770 |
| | 772 |
| 123-6620 | 752 |
| 123-7034 | 326 |
| | 329 |
| 123-7637 | 408 |
| | 412 |
| | 416 |
| | 420 |
| | 424 |
| | 428 |
| | 432 |
| | 436 |
| 123-8670 | 785 |
| 123-8905 | 248 |
| | 254 |
| 123-8906 | 248 |
| | 254 |
| 123-8907 | 250 |
| | 255 |
| 123-8908 | 250 |
| | 255 |
| 123-8909 | 249 |
| | 255 |
| 123-8910 | 249 |
| | 255 |
| 123-8912 | 248 |
| | 255 |
| 123-8913 | 249 |
| | 255 |
| 124-0312 | 698 |
| | 741 |
| 124-0360 | 604 |
| | 613 |
| 124-0486 | 618 |
| 124-0487 | 617 |
| | ►619 |
| 124-0488 | 617 |
| | ►619 |
| 124-0489 | 618 |
| | ►619 |
| 124-2456 | 806 |
| 124-3536 | 45 |
| 124-3815 | 37 |
| | 96 |
| 124-4913 | 641 |
| 124-5246 | 586 |
| 124-5525 | ►591 |
| 124-6524 | 715 |
| 124-6612 | 254 |
| 124-8818 | 549 |
| | ►559 |
| 124-9464 | 289 |
| 125-1037 | 586 |
| 125-2632 | 17 |
| | 18 |
| 125-3298 | 180 |
| 125-3416 | 749 |
| 125-4594 | 591 |
| 125-7116 | 668 |


► PRIMARY REFERENCE

# PART NUMBER INDEX


| Part | Page |
|---|---|
| | 670 |
| | 672 |
| 125-7117 . . . . . | 674 |
| | 675 |
| 125-7894 . . . . . | 386 |
| | 387 |
| 126-1448 . . . . . | 586 |
| 126-1817 . . . . . | 396 |
| | 397 |
| 126-4224 . . . . . | 668 |
| | 669 |
| | 670 |
| | 672 |
| 126-4225 . . . . . | 666 |
| | 667 |
| | 674 |
| | 675 |
| 126-4974 . . . . . | 599 |
| 126-5476 . . . . . | 559 |
| | 561 |
| | 563 |
| | 565 |
| | 567 |
| | 569 |
| | 571 |
| | 573 |
| | 575 |
| | 577 |
| 126-5693 . . . . . | 322 |
| | 607 |
| 126-5701 . . . . . | 322 |
| | 323 |
| 126-5704 . . . . . | 804 |
| | 805 |
| 126-5707 . . . . . | 15 |
| | ▶606 |
| 126-5796 . . . . . | 563 |
| | 573 |
| | 575 |
| | 577 |
| 126-5984 . . . . . | 559 |
| | 561 |
| | 563 |
| | 565 |
| | 567 |
| | 569 |
| | 571 |
| | 573 |
| | 575 |
| | 577 |
| 126-5985 . . . . . | 559 |
| | 561 |
| | 563 |
| | 565 |
| | 567 |
| | 569 |
| | 571 |
| | 573 |
| | 575 |
| | 577 |
| 126-6951 . . . . . | 384 |
| 126-6953 . . . . . | 384 |
| 126-8472 . . . . . | 338 |
| | 729 |
| 126-9091 . . . . . | 586 |

| Part | Page |
|---|---|
| 127-3017 . . . . . | 250 |
| 127-4471 . . . . . | 51 |
| | 73 |
| 127-5469 . . . . . | 236 |
| 127-6980 . . . . . | 56 |
| 127-8987 . . . . . | 586 |
| 128-2776 . . . . . | 561 |
| | 567 |
| | 569 |
| | 571 |
| 128-3094 . . . . . | 627 |
| | 632 |
| | 636 |
| 128-3778 . . . . . | 626 |
| | 631 |
| | 635 |
| 128-4249 . . . . . | 198 |
| 128-5596 . . . . . | 528 |
| | ▶537 |
| 128-7749 . . . . . | 641 |
| 128-7903 . . . . . | 586 |
| 128-7905 . . . . . | 586 |
| 129-0138 . . . . . | ▶289 |
| | 291 |
| 129-1854 . . . . . | 730 |
| | 776 |
| 129-1855 . . . . . | 730 |
| | 776 |
| 129-3178 . . . . . | 115 |
| | 363 |
| | 364 |
| | 700 |
| | 743 |
| | 746 |
| | 761 |
| | 785 |
| 129-3180 . . . . . | 763 |
| | 765 |
| | 768 |
| | 778 |
| | 791 |
| 129-4741 . . . . . | 316 |
| 129-5256 . . . . . | 707 |
| | 709 |
| 129-5257 . . . . . | 707 |
| | 709 |
| 129-8542 . . . . . | 787 |
| | 789 |
| | 793 |
| | 795 |
| 129-8543 . . . . . | 793 |
| | 795 |
| 129-8545 . . . . . | 787 |
| | 789 |
| | 793 |
| | 795 |
| 130-0013 . . . . . | 261 |
| 130-0484 . . . . . | 326 |
| | 329 |
| 130-0912 . . . . . | 263 |
| | 264 |
| | 265 |
| 130-1918 . . . . . | 689 |
| 130-2057 . . . . . | 629 |
| | 634 |

| Part | Page |
|---|---|
| | 638 |
| 130-2758 . . . . . | 391 |
| | 392 |
| | 393 |
| | 394 |
| 130-2759 . . . . . | 391 |
| | 392 |
| | 393 |
| | 394 |
| 130-3879 . . . . . | 57 |
| 130-3880 . . . . . | 56 |
| 130-3881 . . . . . | 715 |
| 130-4832 . . . . . | 698 |
| | 741 |
| 130-5451 . . . . . | 586 |
| 130-5581 . . . . . | 804 |
| | 805 |
| 130-6520 . . . . . | 547 |
| | 548 |
| | 549 |
| | 550 |
| | ▶561 |
| 130-6662 . . . . . | 806 |
| 130-7282 . . . . . | 289 |
| 130-7452 . . . . . | 801 |
| 130-8149 . . . . . | 19 |
| | ▶236 |
| 130-8150 . . . . . | 537 |
| 130-8292 . . . . . | 106 |
| 130-8293 . . . . . | 104 |
| 130-8343 . . . . . | 778 |
| 130-8432 . . . . . | 776 |
| 130-9984 . . . . . | 59 |
| | 61 |
| | 479 |
| 131-0232 . . . . . | 101 |
| 131-0379 . . . . . | 391 |
| | 392 |
| | 393 |
| | 394 |
| 131-0827 . . . . . | 338 |
| 131-0828 . . . . . | 338 |
| 131-1368 . . . . . | 785 |
| 131-1424 . . . . . | 781 |
| | 782 |
| 131-2117 . . . . . | 628 |
| | 633 |
| | 637 |
| 131-2127 . . . . . | 468 |
| 131-3201 . . . . . | 173 |
| | 193 |
| 131-3540 . . . . . | 758 |
| | 763 |
| | 765 |
| | 768 |
| 131-3985 . . . . . | 776 |
| 131-3987 . . . . . | 707 |
| | 731 |
| | 733 |
| 131-6010 . . . . . | 18 |
| | 19 |
| 131-8203 . . . . . | 791 |
| 131-8775 . . . . . | 326 |
| | 329 |
| 131-9203 . . . . . | 206 |

| Part | Page |
|---|---|
| | 208 |
| | 210 |
| | 212 |
| 132-0111 . . . . . | 164 |
| 132-2249 . . . . . | 797 |
| 132-2250 . . . . . | 797 |
| 132-3056 . . . . . | 539 |
| 132-3391 . . . . . | ▶804 |
| 132-3392 . . . . . | 804 |
| 132-3721 . . . . . | 677 |
| | 678 |
| 132-3723 . . . . . | 677 |
| | 678 |
| 132-3725 . . . . . | 677 |
| | 678 |
| 132-3777 . . . . . | 679 |
| | 680 |
| 132-3778 . . . . . | 679 |
| | 680 |
| 132-3821 . . . . . | 677 |
| | 678 |
| | 682 |
| 132-8769 . . . . . | ▶370 |
| 132-9240 . . . . . | 767 |
| | 770 |
| | 772 |
| 133-1011 . . . . . | 37 |
| 133-3413 . . . . . | 114 |
| 133-6517 . . . . . | 114 |
| 133-7332 . . . . . | 462 |
| 133-7333 . . . . . | 462 |
| 133-8688 . . . . . | 569 |
| 133-8689 . . . . . | 569 |
| 133-8690 . . . . . | 569 |
| 133-8877 . . . . . | 18 |
| | 19 |
| 133-8916 . . . . . | 365 |
| | 806 |
| 134-0143 . . . . . | 326 |
| | 329 |
| 134-0404 . . . . . | 187 |
| 134-0453 . . . . . | 361 |
| 134-1374 . . . . . | 363 |
| | 364 |
| 134-2305 . . . . . | 185 |
| | 187 |
| 134-3014 . . . . . | 396 |
| | 397 |
| 134-3059 . . . . . | 707 |
| | 709 |
| 134-3060 . . . . . | 707 |
| | 709 |
| 134-3061 . . . . . | 707 |
| | 709 |
| 134-3062 . . . . . | 707 |
| | 709 |
| 134-3503 . . . . . | 707 |
| | 709 |
| 134-3856 . . . . . | 747 |
| 134-4807 . . . . . | 599 |
| 134-8204 . . . . . | ▶802 |
| 135-1706 . . . . . | 767 |
| | 770 |
| | 772 |
| 135-2567 . . . . . | ▶803 |


▶ PRIMARY REFERENCE

# PART NUMBER INDEX


| Part | Page |
|---|---|
| 135-5893 | 273 |
| | 274 |
| 135-7242 | 163 |
| 135-8203 | 625 |
| | 626 |
| | 627 |
| | 628 |
| | 629 |
| | 630 |
| | 631 |
| | 632 |
| | 633 |
| | 634 |
| | 635 |
| | 636 |
| | 637 |
| | 638 |
| | 641 |
| | 697 |
| 135-8206 | 625 |
| | 626 |
| | 627 |
| | 628 |
| | 629 |
| | 630 |
| | 631 |
| | 632 |
| | 633 |
| | 634 |
| | 635 |
| | 636 |
| | 637 |
| | 641 |
| 136-0155 | 363 |
| | 364 |
| 136-0437 | 606 |
| 136-1955 | 61 |
| | 479 |
| 136-3845 | 126 |
| 136-3846 | 124 |
| 136-3848 | 124 |
| | 126 |
| 136-4192 | 787 |
| | 789 |
| | 793 |
| | 795 |
| 136-5185 | 215 |
| 136-5308 | 79 |
| 136-7808 | 227 |
| 136-8423 | 533 |
| 137-1821 | ▶333 |
| 137-1822 | 333 |
| 137-3848 | ▶690 |
| 137-6215 | 155 |
| | 158 |
| 137-6216 | 155 |
| | 158 |
| 137-9466 | 563 |
| 138-2053 | 50 |
| 138-4559 | 239 |
| | ▶242 |
| 138-4560 | 242 |
| 138-4894 | 180 |
| 138-6904 | 59 |
| 138-6913 | 59 |
| 138-6914 | 61 |
| 138-7137 | 245 |
| 138-7138 | 246 |
| 138-8454 | 133 |
| | 136 |
| | 138 |
| | 140 |
| | 142 |
| | 173 |
| | 176 |
| | 181 |
| | 193 |
| | 198 |
| | 206 |
| | 208 |
| | 210 |
| | 212 |
| 139-3562 | 306 |
| 139-3785 | 338 |
| 140-2358 | 69 |
| | 72 |
| 140-3634 | 69 |
| | 72 |
| 140-3635 | 69 |
| 140-3639 | 69 |
| 140-3640 | 67 |
| | 70 |
| 140-7393 | 247 |
| 140-8714 | 93 |
| | 96 |
| 140-8718 | 93 |
| | 96 |
| 140-8783 | 103 |
| 140-9921 | 791 |
| 141-0711 | 381 |
| 141-0924 | 133 |
| | 136 |
| | 138 |
| | 140 |
| | 142 |
| 141-1656 | 106 |
| 141-1658 | 104 |
| 141-1667 | 84 |
| 141-2759 | 178 |
| | 217 |
| 141-7221 | 267 |
| | 271 |
| | 272 |
| | 273 |
| | 274 |
| | 281 |
| | 282 |
| | 285 |
| | 286 |
| 141-7512 | 65 |
| | 66 |
| 141-7514 | 336 |
| 141-7515 | 338 |
| 141-8292 | ▶164 |
| 142-0724 | 69 |
| 142-3388 | 56 |
| | 57 |
| 142-3391 | 56 |
| | 57 |
| 142-5789 | 133 |
| | 136 |
| | 138 |
| | 140 |
| | 142 |
| 142-6132 | 326 |
| | 329 |
| 142-7405 | 354 |
| 142-8858 | 760 |
| 142-9117 | 144 |
| 143-0539 | ▶166 |
| | 168 |
| 143-0777 | 448 |
| 143-0779 | 448 |
| 143-0782 | ▶41 |
| | 239 |
| | 240 |
| 143-0786 | ▶59 |
| | 239 |
| | 240 |
| 143-0788 | ▶42 |
| | 239 |
| | 240 |
| 143-0789 | ▶61 |
| | 239 |
| | 240 |
| 143-1344 | 166 |
| 143-2827 | 709 |
| | 787 |
| | 789 |
| | 793 |
| | 795 |
| 143-2830 | 709 |
| | 787 |
| | 789 |
| | 793 |
| | 795 |
| 143-4655 | 262 |
| | 263 |
| | 264 |
| | 265 |
| 143-6227 | 265 |
| 143-8874 | 698 |
| | 741 |
| 143-8918 | 388 |
| 144-0195 | 707 |
| | 709 |
| | 785 |
| 144-0367 | 479 |
| 144-2222 | 704 |
| | 706 |
| | ▶716 |
| 144-4277 | 561 |
| 144-6734 | 229 |
| 144-9931 | 183 |
| | ▶753 |
| 144-9934 | 753 |
| 145-4476 | 336 |
| 145-6005 | 69 |
| | 72 |
| 145-6713 | ▶56 |
| | 703 |
| | 705 |
| | 711 |
| 145-8337 | 594 |
| 145-8344 | 594 |
| 145-9291 | 304 |
| 146-0218 | 164 |
| 146-6729 | 166 |
| 146-7744 | 791 |
| 146-7745 | 791 |
| 146-8319 | 272 |
| 146-9439 | 133 |
| | 136 |
| | 138 |
| | 140 |
| | 142 |
| | 178 |
| | 217 |
| 147-0201 | 254 |
| 147-0202 | 255 |
| 147-0203 | 255 |
| 147-0205 | 255 |
| 147-0207 | 255 |
| 147-0209 | 254 |
| | ▶260 |
| 147-0210 | 255 |
| 147-0211 | 256 |
| 147-0212 | 255 |
| 147-0215 | 255 |
| 147-0216 | 255 |
| 147-0218 | 254 |
| 147-0224 | 255 |
| 147-0226 | 256 |
| 147-0227 | 256 |
| 147-0228 | 255 |
| 147-0234 | 254 |
| 147-0236 | 255 |
| 147-0238 | 255 |
| 147-0242 | 255 |
| 147-0248 | 255 |
| 147-0253 | 254 |
| 147-0256 | 256 |
| 147-0257 | 255 |
| 147-0258 | 255 |
| 147-0259 | 255 |
| 147-0260 | 255 |
| 147-0261 | 255 |
| 147-0262 | 256 |
| 147-0264 | 255 |
| 147-0266 | 256 |
| 147-0268 | 256 |
| 147-0270 | 256 |
| 147-0385 | 51 |
| 147-1559 | ▶57 |
| | 704 |
| | 706 |
| 147-1659 | 563 |
| 147-1979 | 32 |
| 147-3019 | 731 |
| | 733 |
| 147-4502 | 115 |
| 147-5553 | 83 |
| 148-3626 | 738 |
| 148-5353 | 787 |
| | 789 |
| | 793 |
| | 795 |
| 148-5355 | 731 |
| | 733 |
| 148-7310 | 733 |


▶ PRIMARY REFERENCE

# PART NUMBER INDEX


| Part | Page |
|---|---|
| 148-7311 | 731 |
| 148-7318 | 733 |
| 148-7319 | 731 |
| 148-7868 | 308 |
| 148-8315 | 454 |
| | 458 |
| 148-8316 | 300 |
| | 347 |
| | 477 |
| 148-8318 | 300 |
| 148-8322 | 451 |
| 148-8325 | 292 |
| | 451 |
| | 474 |
| 148-8326 | 102 |
| 148-8327 | 440 |
| | 452 |
| | 497 |
| | 499 |
| 148-8335 | 409 |
| | 412 |
| | 416 |
| | 420 |
| | 424 |
| | 428 |
| | 432 |
| | 436 |
| | 482 |
| 148-8336 | 451 |
| | 466 |
| | 468 |
| | 470 |
| | 472 |
| | 497 |
| | 499 |
| 148-8339 | 59 |
| | 61 |
| 148-8340 | 458 |
| 148-8341 | 398 |
| | 400 |
| | 402 |
| | 404 |
| | 405 |
| | 407 |
| | 408 |
| | 416 |
| | 446 |
| | 448 |
| | 451 |
| | 454 |
| | 458 |
| | 462 |
| | 464 |
| | 501 |
| | 519 |
| | 521 |
| 148-8342 | 458 |
| | 509 |
| | 511 |
| | 513 |
| | 516 |
| 148-8345 | 451 |
| | 454 |
| | 497 |
| | 499 |
| 148-8346 | 300 |
| | 487 |
| 148-8347 | 497 |
| | 499 |
| | 502 |
| | 505 |
| 148-8351 | 477 |
| | 513 |
| | 516 |
| 148-8352 | 408 |
| | 412 |
| | 416 |
| | 420 |
| | 479 |
| 148-8354 | 509 |
| | 511 |
| | 513 |
| | 516 |
| 148-8357 | 479 |
| 148-8360 | 59 |
| | 61 |
| 148-8362 | 441 |
| | 479 |
| 148-8364 | 487 |
| | 509 |
| | 511 |
| | 513 |
| | 516 |
| | 519 |
| 148-8366 | 489 |
| | 491 |
| | 493 |
| | 495 |
| 148-8367 | 300 |
| 148-8368 | 292 |
| | 451 |
| | 454 |
| | 459 |
| 148-8369 | 300 |
| | 477 |
| 148-8378 | 489 |
| | 491 |
| | 493 |
| | 495 |
| 148-8382 | 464 |
| 148-8383 | 300 |
| 148-8390 | 445 |
| | 448 |
| | 450 |
| | 459 |
| | 487 |
| | 521 |
| 148-8393 | 459 |
| | 521 |
| 148-8407 | 102 |
| | 474 |
| 148-8408 | 404 |
| | 407 |
| | 530 |
| | 543 |
| 148-8411 | 509 |
| | 511 |
| | 513 |
| | 516 |
| 148-8417 | 451 |
| 148-8422 | 479 |
| 148-8426 | 455 |
| 148-8429 | 482 |
| | 483 |
| | 485 |
| | 486 |
| 148-8431 | 484 |
| | 545 |
| | 546 |
| 148-8435 | 451 |
| 148-8439 | 489 |
| | 491 |
| | 493 |
| | 495 |
| 148-8446 | 446 |
| | 448 |
| | 452 |
| | 455 |
| | 459 |
| | 519 |
| 148-8449 | 452 |
| 148-8454 | 509 |
| | 511 |
| 148-8455 | 441 |
| 148-8457 | 441 |
| 148-8458 | 443 |
| | 444 |
| 148-8986 | 254 |
| | ►262 |
| 148-8988 | 254 |
| | ►263 |
| 149-4236 | 84 |
| 149-4745 | 770 |
| | 772 |
| | 774 |
| 149-9954 | 98 |
| 150-3027 | 479 |
| | 539 |
| 150-3037 | 459 |
| 150-3052 | 408 |
| | 412 |
| | 416 |
| | 420 |
| | 424 |
| | 428 |
| | 432 |
| | 436 |
| 150-3053 | 408 |
| | 412 |
| | 416 |
| | 420 |
| | 424 |
| | 428 |
| | 432 |
| | 436 |
| | 489 |
| 150-3056 | 491 |
| | 493 |
| | 495 |
| 150-3057 | 428 |
| | 436 |
| | 505 |
| 150-3060 | 466 |
| | 468 |
| | 470 |
| | 472 |
| 150-3062 | 347 |
| 150-3063 | 446 |
| | 448 |
| | 455 |
| | 459 |
| 150-3068 | 408 |
| | 416 |
| | 424 |
| | 432 |
| 150-3071 | 428 |
| | 436 |
| | 505 |
| 150-3370 | 61 |
| 150-3374 | 61 |
| 150-3757 | 255 |
| 150-4043 | 487 |
| 150-4044 | 489 |
| | 491 |
| | 493 |
| | 495 |
| 150-4086 | 203 |
| 150-4932 | 262 |
| | 263 |
| 150-5150 | 579 |
| 150-7732 | 25 |
| | 254 |
| 150-8015 | 791 |
| 151-2963 | 316 |
| 151-4841 | 86 |
| | 446 |
| | 448 |
| | 455 |
| | 459 |
| | 462 |
| | 464 |
| | 519 |
| | 521 |
| 151-5349 | 384 |
| 151-5715 | 738 |
| 151-7866 | ►625 |
| | 639 |
| 151-7867 | ►626 |
| 151-7868 | ►627 |
| 151-7869 | ►628 |
| 151-7870 | ►629 |
| 151-7877 | ►630 |
| | 640 |
| 151-7879 | ►631 |
| 151-7880 | ►632 |
| 151-7881 | ►633 |
| 151-7882 | ►634 |
| 151-7887 | ►635 |
| 151-7888 | ►636 |
| 151-7889 | ►637 |
| 151-7890 | ►638 |
| 151-7902 | 626 |
| | 627 |
| | 628 |
| | 629 |
| | 631 |
| | 632 |
| | 633 |
| | 634 |
| | 635 |


► PRIMARY REFERENCE

# PART NUMBER INDEX


| Part | Page |
|---|---|
| | 636 |
| | 637 |
| | 638 |
| | 644 |
| | 645 |
| | 646 |
| | 647 |
| | 649 |
| | 650 |
| | 651 |
| | 652 |
| | 653 |
| | 654 |
| | 655 |
| | 656 |
| | 657 |
| | 659 |
| | 660 |
| | 661 |
| | 662 |
| 151-7903 . . . . . | 626 |
| | 627 |
| | 628 |
| | 629 |
| | 631 |
| | 632 |
| | 633 |
| | 634 |
| | 635 |
| | 636 |
| | 637 |
| | 638 |
| | 644 |
| | 645 |
| | 646 |
| | 647 |
| | 649 |
| | 650 |
| | 651 |
| | 652 |
| | 653 |
| | 654 |
| | 655 |
| | 656 |
| | 657 |
| | 659 |
| | 660 |
| | 661 |
| | 662 |
| 151-7927 . . . . . | 630 |
| | 631 |
| | 632 |
| | 633 |
| | 634 |
| | 641 |
| 151-7928 . . . . . | 5 |
| | 6 |
| | 7 |
| | 8 |
| | 9 |
| | 10 |
| | 11 |
| | 12 |
| | 13 |
| | 14 |
| 151-7929 . . . . . | ▶594 |
| | 625 |
| | 630 |
| | 641 |
| | 643 |
| | 648 |
| | 658 |
| 151-7930 . . . . . | 625 |
| | 630 |
| | 641 |
| | 643 |
| | 648 |
| | 658 |
| 151-8752 . . . . . | 69 |
| | 72 |
| 152-0184 . . . . . | 17 |
| | ▶344 |
| 152-3968 . . . . . | 92 |
| 152-6144 . . . . . | 218 |
| | 227 |
| 152-8417 . . . . . | 749 |
| 153-3061 . . . . . | 56 |
| | 57 |
| | 716 |
| 153-3761 . . . . . | 61 |
| 153-7368 . . . . . | 304 |
| 153-7369 . . . . . | ▶299 |
| 153-9580 . . . . . | 297 |
| | ▶304 |
| 153-9909 . . . . . | 61 |
| 153-9910 . . . . . | 61 |
| 153-9911 . . . . . | 61 |
| 154-0875 . . . . . | 61 |
| 154-5255 . . . . . | 625 |
| | 630 |
| | 641 |
| 154-5257 . . . . . | 625 |
| | 630 |
| | 641 |
| | 643 |
| | 648 |
| | 658 |
| 154-5265 . . . . . | 594 |
| 154-5277 . . . . . | 594 |
| | 596 |
| 154-5278 . . . . . | 594 |
| | 596 |
| 154-5279 . . . . . | 594 |
| | 690 |
| | 691 |
| 154-5280 . . . . . | 594 |
| | 691 |
| 154-5404 . . . . . | 218 |
| 154-5410 . . . . . | 797 |
| 154-5416 . . . . . | 291 |
| 154-5423 . . . . . | 787 |
| | 789 |
| 154-5424 . . . . . | 787 |
| | 789 |
| 154-5428 . . . . . | 171 |
| 154-8051 . . . . . | 376 |
| 154-8278 . . . . . | 767 |
| | 770 |
| | 772 |
| 154-8280 . . . . . | 767 |
| | 770 |
| | 772 |
| 154-8284 . . . . . | 767 |
| | 770 |
| | 772 |
| 155-2255 . . . . . | 176 |
| | 183 |
| | 185 |
| | 187 |
| | 198 |
| 155-2256 . . . . . | 176 |
| 155-2260 . . . . . | 112 |
| | 115 |
| | 144 |
| | 176 |
| | 178 |
| | 181 |
| | 185 |
| | 187 |
| | 189 |
| | 198 |
| | 206 |
| | 208 |
| | 210 |
| | 212 |
| 155-2263 . . . . . | 146 |
| | 149 |
| | 152 |
| | 155 |
| | 158 |
| 155-2265 . . . . . | 178 |
| | 183 |
| | 198 |
| | 707 |
| | 709 |
| | 712 |
| 155-2270 . . . . . | 115 |
| | 133 |
| | 136 |
| | 138 |
| | 140 |
| | 142 |
| | 144 |
| | 173 |
| | 176 |
| | 181 |
| | 185 |
| | 187 |
| | 189 |
| | 193 |
| | 198 |
| | 203 |
| | 206 |
| | 208 |
| | 210 |
| | 212 |
| | 215 |
| | 291 |
| | 487 |
| | 700 |
| 155-2271 . . . . . | 115 |
| | 133 |
| | 136 |
| | 138 |
| | 176 |
| | 178 |
| | 181 |
| | 185 |
| | 187 |
| | 189 |
| | 198 |
| | 203 |
| | 206 |
| | 208 |
| | 210 |
| | 212 |
| | 215 |
| 155-2274 . . . . . | 133 |
| | 136 |
| | 138 |
| | 140 |
| | 142 |
| | 146 |
| | 149 |
| | 152 |
| | 155 |
| | 158 |
| | 178 |
| | 181 |
| | 185 |
| | 187 |
| | 189 |
| | 198 |
| | 203 |
| | 206 |
| | 208 |
| | 210 |
| | 212 |
| 155-6457 . . . . . | 133 |
| | 136 |
| | 138 |
| | 140 |
| | 142 |
| 155-6586 . . . . . | ▶378 |
| | 609 |
| | 611 |
| 155-8154 . . . . . | 292 |
| 155-8522 . . . . . | 176 |
| | 189 |
| | 203 |
| 155-9836 . . . . . | 559 |
| | 561 |
| | 565 |
| | 567 |
| | 569 |
| | 571 |
| 156-0283 . . . . . | 133 |
| | 136 |
| | 138 |
| | 140 |
| | 142 |
| | 319 |
| 156-1928 . . . . . | 220 |
| 156-1929 . . . . . | 220 |
| 156-1930 . . . . . | 220 |
| 156-1933 . . . . . | 222 |
| 156-1934 . . . . . | 221 |
| 156-2571 . . . . . | 220 |
| 156-2572 . . . . . | 220 |
| 156-2573 . . . . . | 222 |
| 156-2857 . . . . . | ▶220 |
| | 230 |
| 156-3691 . . . . . | 455 |
| | 459 |
| 156-3837 . . . . . | 458 |


▶ PRIMARY REFERENCE

# PART NUMBER INDEX


| Part | Page |
|---|---|
| | 521 |
| 156-3838 | 458 |
| | 521 |
| 156-5970 | 585 |
| 156-9275 | 248 |
| 156-9370 | 454 |
| 156-9371 | 454 |
| 157-1669 | 99 |
| 157-1997 | 183 |
| | 185 |
| | 187 |
| 157-2088 | 255 |
| 157-2090 | 255 |
| 157-3364 | 609 |
| 157-3365 | 609 |
| 157-3366 | 609 |
| 157-3367 | 609 |
| 158-2306 | 346 |
| 158-3412 | 446 |
| | 448 |
| | 450 |
| | 454 |
| | 458 |
| | 462 |
| | 519 |
| | 521 |
| 158-8778 | 592 |
| 159-0186 | 59 |
| | 61 |
| | 479 |
| 159-0738 | 458 |
| 159-0739 | 458 |
| 159-0783 | 458 |
| 159-0784 | 458 |
| 159-0959 | 329 |
| | 408 |
| | 416 |
| 159-0960 | 326 |
| 159-0961 | 604 |
| | 613 |
| 159-0974 | 458 |
| 159-0975 | 458 |
| 159-4269 | 731 |
| | 733 |
| 159-4945 | 707 |
| | 733 |
| 159-4946 | 707 |
| | 731 |
| 159-4950 | 789 |
| | 793 |
| 159-4951 | 787 |
| | 795 |
| 159-4953 | 731 |
| 159-4954 | 733 |
| 159-5848 | 376 |
| 159-7104 | 752 |
| 159-7105 | 752 |
| 159-7106 | 752 |
| 159-7342 | 17 |
| | 18 |
| | 19 |
| 159-7907 | 296 |
| 159-8033 | 806 |
| 160-0496 | 346 |
| 160-2245 | 749 |
| 160-2248 | 300 |
| 160-7197 | 88 |
| 160-8282 | 451 |
| 160-8283 | 451 |
| 160-9777 | 451 |
| 161-3249 | 248 |
| | 254 |
| 161-3981 | 454 |
| | 458 |
| 161-4057 | 454 |
| 161-4059 | 454 |
| 161-6209 | 454 |
| 161-6984 | 787 |
| | 789 |
| | 793 |
| | 795 |
| 161-6987 | 787 |
| | 789 |
| | 793 |
| | 795 |
| 161-9044 | 731 |
| | 733 |
| 161-9282 | 778 |
| 161-9283 | 778 |
| 161-9285 | 778 |
| 161-9286 | 778 |
| 161-9288 | 778 |
| 161-9289 | 770 |
| | 772 |
| | 774 |
| 161-9290 | 767 |
| | 770 |
| | 772 |
| 161-9294 | 787 |
| | 789 |
| | 793 |
| | 795 |
| 161-9744 | 772 |
| | 774 |
| 161-9916 | 452 |
| 162-1565 | 25 |
| 162-1604 | 533 |
| 162-2351 | 378 |
| | ►445 |
| 162-2353 | 445 |
| 162-2356 | 502 |
| | 505 |
| 162-3960 | ►346 |
| | 487 |
| 162-3996 | ►317 |
| 162-3998 | 317 |
| 162-3999 | 317 |
| 162-4004 | 317 |
| | 318 |
| 162-6556 | 787 |
| | 789 |
| | 793 |
| | 795 |
| 163-0753 | 290 |
| | ►295 |
| 163-0754 | ►290 |
| | 291 |
| 163-0755 | 290 |
| 163-1135 | 778 |
| 163-1139 | 778 |
| 163-4759 | 797 |
| 163-6290 | 195 |
| 163-7939 | 707 |
| | 709 |
| | 712 |
| 163-7940 | 297 |
| | 298 |
| 163-9091 | 254 |
| 163-9371 | 393 |
| | 394 |
| | ►446 |
| 164-1030 | 703 |
| | 705 |
| | ►741 |
| 164-1032 | ►698 |
| | 704 |
| | 706 |
| 164-1037 | 741 |
| 164-1040 | 749 |
| 164-1041 | 749 |
| 164-1042 | 698 |
| 164-1043 | 735 |
| 164-1044 | 737 |
| 164-1055 | ►752 |
| 164-1056 | 198 |
| 164-1059 | 707 |
| | ►787 |
| 164-1060 | 707 |
| | ►789 |
| 164-1061 | 707 |
| | 709 |
| | ►733 |
| 164-1062 | 707 |
| | 709 |
| | ►731 |
| 164-1064 | 787 |
| 164-1065 | 789 |
| 164-1066 | 793 |
| 164-1067 | 795 |
| 164-1068 | 707 |
| | 709 |
| 164-1069 | 707 |
| | 709 |
| 164-1070 | 707 |
| | 709 |
| 164-1071 | 707 |
| | 709 |
| | 712 |
| 164-1072 | 707 |
| | 709 |
| | 712 |
| 164-1073 | 733 |
| | ►793 |
| 164-1074 | 731 |
| | ►795 |
| 164-1077 | 86 |
| 164-1078 | 86 |
| | ►761 |
| 164-1079 | 746 |
| 164-1083 | 746 |
| 164-1096 | 146 |
| | 149 |
| | 152 |
| 164-1097 | 146 |
| | 149 |
| | 152 |
| 164-1100 | 705 |
| | 706 |
| | ►707 |
| 164-1102 | 320 |
| 164-1103 | 320 |
| 164-1105 | 239 |
| 164-1107 | 726 |
| 164-1108 | 727 |
| 164-1110 | 783 |
| 164-1113 | 226 |
| 164-1122 | 758 |
| 164-1123 | 758 |
| 164-1130 | ►226 |
| | 239 |
| | 240 |
| 164-1131 | ►721 |
| | 723 |
| 164-1132 | 719 |
| | ►722 |
| 164-1133 | 721 |
| | 722 |
| 164-1134 | 721 |
| | 722 |
| 164-1137 | 728 |
| 164-1141 | 240 |
| | ►735 |
| 164-1142 | 240 |
| | ►737 |
| 164-1146 | 239 |
| 164-1149 | ►319 |
| | 703 |
| | 704 |
| | 705 |
| | 706 |
| | 711 |
| 164-1152 | 776 |
| 164-1153 | 226 |
| 164-1154 | 761 |
| 164-1156 | 776 |
| 164-1157 | 776 |
| 164-1165 | 703 |
| | 704 |
| | 705 |
| | 706 |
| | ►776 |
| 164-1166 | 776 |
| 164-1175 | 711 |
| | ►712 |
| 164-1177 | 758 |
| 164-1178 | 724 |
| | 725 |
| 164-1196 | 698 |
| | 741 |
| 164-1197 | 226 |
| 164-1198 | 735 |
| 164-1201 | ►770 |
| | 775 |
| 164-1202 | ►772 |
| | 775 |
| 164-1203 | ►774 |
| | 775 |
| 164-1207 | 770 |
| | 772 |
| | 774 |


► PRIMARY REFERENCE

# PART NUMBER INDEX


| Part | Page |
|---|---|
| | ▶778 |
| 164-1208 | 778 |
| 164-1209 | ▶763 |
| | 770 |
| 164-1210 | ▶765 |
| | 772 |
| 164-1211 | 767 |
| | 770 |
| | 772 |
| 164-1212 | 767 |
| | 770 |
| | 772 |
| 164-1213 | ▶767 |
| | 774 |
| 164-1214 | 763 |
| | 765 |
| | 767 |
| 164-1215 | 778 |
| 164-1216 | 778 |
| 164-1217 | 778 |
| 164-1218 | 778 |
| 164-1219 | 778 |
| 164-1220 | 778 |
| 164-1221 | 778 |
| 164-1224 | 778 |
| 164-1225 | 778 |
| 164-1226 | 778 |
| 164-1228 | 778 |
| 164-1229 | 778 |
| 164-1230 | 778 |
| 164-1231 | 778 |
| 164-1232 | 778 |
| 164-1233 | 778 |
| 164-1234 | 778 |
| 164-1236 | 778 |
| 164-1237 | 778 |
| 164-1238 | 778 |
| 164-1239 | 778 |
| 164-1240 | 778 |
| 164-1244 | 763 |
| 164-1245 | 767 |
| 164-1246 | 767 |
| 164-1247 | 763 |
| | 765 |
| | 767 |
| 164-1248 | 763 |
| | 765 |
| 164-1249 | 763 |
| | 765 |
| | 767 |
| 164-1250 | 763 |
| | 765 |
| | 767 |
| 164-1251 | 763 |
| | 765 |
| | 767 |
| 164-1252 | 763 |
| | 765 |
| | 767 |
| 164-1256 | 763 |
| | 765 |
| | 767 |
| 164-1257 | 767 |
| 164-1258 | 763 |
| | 765 |
| | 767 |
| 164-1259 | 763 |
| | 765 |
| | 767 |
| 164-1261 | 763 |
| | 765 |
| | 767 |
| 164-1262 | 767 |
| 164-1263 | 767 |
| 164-1264 | 767 |
| 164-1265 | 763 |
| | 765 |
| | 767 |
| 164-1266 | 765 |
| 164-1269 | 767 |
| 164-1270 | 767 |
| 164-1271 | 767 |
| 164-1272 | 767 |
| 164-1273 | 767 |
| 164-1274 | 767 |
| 164-1275 | 767 |
| 164-1276 | 767 |
| 164-1277 | 767 |
| 164-1294 | 778 |
| 164-1295 | 767 |
| | 770 |
| | 772 |
| 164-1300 | 707 |
| | 709 |
| | ▶791 |
| 164-1303 | 791 |
| 164-1304 | 791 |
| 164-1308 | 791 |
| 164-1311 | 791 |
| 164-1314 | 791 |
| 164-1316 | 791 |
| 164-1317 | 791 |
| 164-1328 | 791 |
| 164-1342 | 791 |
| 164-1343 | 791 |
| 164-1344 | 791 |
| 164-1345 | 791 |
| 164-1346 | 791 |
| 164-1348 | 791 |
| 164-1351 | 791 |
| 164-1352 | 791 |
| 164-1353 | 791 |
| 164-1354 | 791 |
| 164-1361 | 352 |
| | 354 |
| | 356 |
| 164-1363 | 391 |
| | 393 |
| 164-1364 | 392 |
| | 394 |
| 164-1365 | 226 |
| 164-1366 | 783 |
| 164-1368 | 226 |
| | 359 |
| | 735 |
| 164-1369 | 359 |
| 164-1370 | 703 |
| | 704 |
| | 705 |
| | 706 |
| | 711 |
| | ▶783 |
| 164-1371 | 352 |
| | 354 |
| | 356 |
| 164-1388 | 704 |
| | 705 |
| | 706 |
| | ▶723 |
| 164-1389 | 703 |
| | 711 |
| | ▶719 |
| 164-1395 | 86 |
| | 361 |
| | 362 |
| 164-1399 | 352 |
| | 354 |
| | 356 |
| 164-1400 | ▶352 |
| 164-1402 | 352 |
| | 354 |
| 164-1404 | 352 |
| | 354 |
| 164-1406 | 352 |
| | 356 |
| 164-1409 | 352 |
| | 354 |
| 164-1411 | 352 |
| | 354 |
| 164-1420 | ▶354 |
| | 369 |
| 164-1421 | 354 |
| 164-1422 | 354 |
| 164-1425 | 354 |
| 164-1427 | 354 |
| 164-1429 | 354 |
| 164-1430 | ▶369 |
| 164-1435 | 352 |
| | 354 |
| 164-1438 | 354 |
| 164-1440 | ▶356 |
| | 358 |
| 164-1441 | 354 |
| | 356 |
| 164-1447 | 356 |
| 164-1450 | ▶358 |
| 164-1451 | 356 |
| 164-1452 | 356 |
| 164-1455 | 356 |
| 164-1540 | ▶365 |
| | 542 |
| | 543 |
| | 544 |
| | 545 |
| | 546 |
| 164-1541 | 365 |
| 164-1544 | 365 |
| | 367 |
| 164-1547 | 365 |
| | 367 |
| 164-1549 | 365 |
| | 367 |
| 164-1550 | ▶367 |
| | 543 |
| | 545 |
| | 546 |
| 164-1551 | 367 |
| 164-1560 | 352 |
| | 354 |
| 164-1565 | 356 |
| 164-1601 | 180 |
| 164-3876 | 100 |
| | 306 |
| | 307 |
| 164-4139 | 700 |
| 164-4659 | ▶620 |
| 164-5544 | 300 |
| 164-5561 | 452 |
| 164-5567 | 347 |
| | 474 |
| | 479 |
| 164-5594 | 483 |
| 164-6613 | 743 |
| 164-7176 | 379 |
| 164-7556 | 118 |
| | 119 |
| 164-8473 | 698 |
| | 717 |
| | 718 |
| | 738 |
| 164-9425 | 189 |
| | 745 |
| 164-9598 | 295 |
| 164-9599 | 295 |
| 165-2273 | 390 |
| 165-5655 | 115 |
| 165-6585 | 292 |
| 165-6595 | 292 |
| 165-6599 | 292 |
| 165-6601 | 292 |
| 165-6602 | 292 |
| 165-6603 | 292 |
| 165-6918 | 239 |
| | ▶292 |
| 165-6982 | 451 |
| 165-7769 | 9 |
| | ▶529 |
| 165-7951 | 99 |
| 165-8996 | 237 |
| 166-1579 | 474 |
| 166-2033 | 474 |
| 166-2861 | 716 |
| 166-7870 | 605 |
| 166-7950 | 551 |
| | 552 |
| | 553 |
| | 554 |
| | 556 |
| | 557 |
| | ▶563 |
| 166-9413 | 289 |
| 167-0566 | 513 |
| | 516 |
| 167-2186 | 379 |
| | 382 |
| 167-2191 | 384 |
| 167-2195 | 381 |
| | 386 |
| | 387 |
| | 388 |


▶ PRIMARY REFERENCE

# PART NUMBER INDEX


| Part | Page |
|---|---|
| 167-2201 | 372 |
| | 374 |
| | 385 |
| 167-2202 | 376 |
| 167-2294 | 379 |
| | 382 |
| 167-2300 | 384 |
| 167-2304 | 381 |
| | 386 |
| | 387 |
| | 388 |
| 167-2310 | 376 |
| 167-2312 | 372 |
| | 374 |
| | 385 |
| 167-3693 | 189 |
| 167-3700 | 198 |
| 167-3701 | 183 |
| 167-3707 | 203 |
| 167-3710 | 707 |
| | 709 |
| | 712 |
| 167-3896 | 502 |
| | 505 |
| 167-6768 | 559 |
| | 563 |
| | 565 |
| | 573 |
| | 575 |
| | 577 |
| 167-7966 | 487 |
| 167-8160 | 292 |
| 167-8161 | 292 |
| 167-8164 | 292 |
| 167-8182 | 791 |
| 167-8187 | 703 |
| | 704 |
| | 705 |
| | 706 |
| | ▶785 |
| 167-8248 | 352 |
| | 354 |
| | 356 |
| 167-8251 | 727 |
| 167-8252 | 721 |
| 167-8278 | 756 |
| 167-8279 | 756 |
| 167-8283 | 760 |
| 167-8285 | 319 |
| 167-8286 | 319 |
| 167-8330 | 1 |
| | 2 |
| | 3 |
| | 4 |
| | ▶596 |
| 168-0443 | 639 |
| | 640 |
| | 642 |
| | 663 |
| | 664 |
| | 665 |
| 168-0444 | 639 |
| | 640 |
| | 642 |
| | 663 |
| | 664 |
| | 665 |
| 168-0480 | 626 |
| | 627 |
| | 628 |
| | 629 |
| | 631 |
| | 632 |
| | 633 |
| | 634 |
| | 635 |
| | 636 |
| | 637 |
| | 638 |
| | 644 |
| | 645 |
| | 646 |
| | 647 |
| | 649 |
| | 650 |
| | 651 |
| | 652 |
| | 653 |
| | 654 |
| | 655 |
| | 656 |
| | 657 |
| | 659 |
| | 660 |
| | 661 |
| | 662 |
| 168-2313 | 700 |
| | 743 |
| 168-4609 | 758 |
| 168-8186 | 489 |
| | 544 |
| | 545 |
| 168-8192 | 408 |
| | 412 |
| | 416 |
| | 420 |
| 168-8193 | 408 |
| | 412 |
| | 416 |
| | 420 |
| | 424 |
| | 428 |
| | 432 |
| | 436 |
| 168-8497 | 505 |
| 168-8644 | 505 |
| 168-9906 | 785 |
| 169-0586 | 185 |
| | 187 |
| 169-0587 | 183 |
| | 745 |
| 169-0588 | 183 |
| 169-0590 | 136 |
| | 140 |
| 169-0591 | 133 |
| | 138 |
| | 142 |
| 169-0592 | 136 |
| | 140 |
| 169-0593 | 133 |
| | 138 |
| | 142 |
| 169-0594 | 146 |
| | 149 |
| | 152 |
| | 155 |
| | 158 |
| 169-0595 | 133 |
| | 136 |
| | 138 |
| | 140 |
| | 142 |
| 169-0596 | 178 |
| 169-0597 | 203 |
| 169-0598 | 217 |
| 169-0599 | 542 |
| | 543 |
| 169-0604 | 176 |
| 169-0605 | 173 |
| | 193 |
| 169-0606 | 173 |
| 169-0607 | 206 |
| | 210 |
| | 349 |
| | 397 |
| 169-0608 | 208 |
| | 212 |
| 169-0611 | 144 |
| 169-6947 | 386 |
| | 387 |
| 169-7290 | 776 |
| 169-7291 | 776 |
| 170-0075 | 698 |
| | ▶700 |
| | 741 |
| | ▶743 |
| 170-0076 | 346 |
| 170-0503 | 539 |
| 170-1644 | 173 |
| 170-2237 | 193 |
| | 17 |
| 170-3492 | 18 |
| | 185 |
| 170-6305 | 187 |
| | 187 |
| 170-6309 | 352 |
| 170-6312 | 354 |
| | 185 |
| 170-6542 | 187 |
| | 700 |
| 170-7269 | 743 |
| | 700 |
| 170-7270 | 743 |
| | 700 |
| 170-7271 | 743 |
| | 700 |
| 170-7272 | 743 |
| | 170-7274 |
| | 170-7281 |
| | 743 |
| | 170-7282 |
| | 743 |
| | 170-9066 |
| | 171-2870 |
| | 171-5349 |
| | 171-6725 |
| | 171-8623 |
| | 172-4823 |
| | 172-5317 |
| | 255 |
| | 172-6050 |
| | 255 |
| | 172-6224 |
| | 806 |
| | 172-6743 |
| | 172-8508 |
| | 14 |
| | ▶530 |
| | 172-8591 |
| | 725 |
| | 172-9200 |
| | 187 |
| | 215 |
| | 172-9992 |
| | 173-0332 |
| | 173-0637 |
| | 173-0638 |
| | 173-0639 |
| | 173-0641 |
| | 173-2769 |
| | 611 |
| | 173-3175 |
| | 138 |
| | 140 |
| | 142 |
| | 146 |
| | 149 |
| | 152 |
| | 155 |
| | 158 |
| | 173-4514 |
| | 397 |
| | 173-4565 |
| | 396 |
| | 397 |
| | 173-5787 |
| | 772 |
| | 774 |
| | 173-7758 |
| | 611 |
| | 173-9683 |
| | 173-9718 |
| | 173-9719 |
| | 173-9779 |
| | 388 |
| | 174-2024 |
| | 704 |
| | 705 |
| | 706 |
| | ▶797 |
| | 174-2025 |
| | 174-2026 |


▶ PRIMARY REFERENCE

# PART NUMBER INDEX


| Part | Page |
|---|---|
| 174-4028 | 497 |
| 174-4029 | 497 |
| 174-4030 | 497 |
| 174-4031 | 497 |
| 174-4032 | 497 |
| 174-4033 | 497 |
| 174-4034 | 497 |
| 174-4035 | 497 |
| 174-4643 | 218 |
| 174-4671 | 218 |
| 174-5456 | 797 |
| 174-5696 | 613 |
| 174-6362 | ▶639 |
| 174-6365 | ▶640 |
| 174-6395 | 206 |
| | 208 |
| 174-6398 | 206 |
| | 208 |
| | 210 |
| | 212 |
| 174-6411 | 176 |
| 174-6415 | 176 |
| 174-6640 | 226 |
| 174-6649 | 176 |
| 174-6740 | 474 |
| 174-6812 | 588 |
| 174-7820 | 292 |
| 174-9638 | 84 |
| 174-9711 | 248 |
| 175-0054 | 248 |
| 175-5050 | 778 |
| 175-6916 | 454 |
| | 458 |
| 175-6917 | 454 |
| 175-6918 | 451 |
| 175-6919 | 451 |
| 175-7618 | 1 |
| | 2 |
| | 5 |
| | 6 |
| | 10 |
| | 11 |
| | ▶489 |
| 175-7620 | 9 |
| | 12 |
| | ▶531 |
| 175-7877 | 5 |
| | 6 |
| | 7 |
| | 8 |
| | 9 |
| | 10 |
| | 11 |
| | 12 |
| | 13 |
| | 14 |
| | ▶593 |
| 175-7895 | 384 |
| 175-7896 | 379 |
| 175-7902 | 376 |
| | 385 |
| 175-7903 | 376 |
| 176-0145 | 402 |
| | 404 |
| | 405 |
| | 407 |
| | 531 |
| 176-0311 | 133 |
| | 136 |
| | 138 |
| 176-0312 | 133 |
| | 138 |
| 176-0346 | 133 |
| | 136 |
| | 138 |
| 176-0585 | 509 |
| | 511 |
| | 513 |
| | 516 |
| 176-3900 | 749 |
| 176-6219 | 92 |
| 176-6247 | ▶677 |
| | 679 |
| 176-6248 | 677 |
| 176-6251 | ▶678 |
| | 680 |
| 176-6252 | 678 |
| 176-8121 | 451 |
| 176-8122 | 451 |
| 176-8123 | 444 |
| 176-8127 | 443 |
| 176-9152 | 402 |
| | 404 |
| | 405 |
| | 407 |
| | 531 |
| 176-9153 | 530 |
| 176-9154 | 398 |
| | 400 |
| 176-9155 | 530 |
| 176-9294 | 408 |
| | 416 |
| 177-4726 | 18 |
| | ▶601 |
| 177-4727 | 17 |
| | ▶602 |
| 177-4729 | 601 |
| 177-4733 | 602 |
| 177-4877 | 707 |
| 177-4903 | ▶695 |
| 177-4904 | ▶696 |
| 177-7094 | 497 |
| | 499 |
| 177-9600 | 799 |
| 177-9645 | 173 |
| | 189 |
| | 193 |
| 177-9648 | 173 |
| | 193 |
| | 198 |
| 178-1304 | 276 |
| | 277 |
| 178-3593 | ▶691 |
| 178-4200 | 695 |
| 178-4201 | 696 |
| 178-7227 | 267 |
| | ▶274 |
| 178-7228 | ▶274 |
| 178-7229 | 274 |
| | ▶275 |
| 178-7230 | 274 |
| | 275 |
| 178-7481 | 408 |
| | 416 |
| | ▶558 |
| 178-7539 | 133 |
| | 136 |
| | 138 |
| | 140 |
| | 142 |
| | 202 |
| 178-8132 | 249 |
| 178-8133 | 250 |
| 178-8134 | 249 |
| 178-8200 | 249 |
| 178-8465 | 189 |
| 178-8608 | 234 |
| | 235 |
| 178-8849 | ▶679 |
| 178-8850 | ▶680 |
| 178-9242 | 104 |
| | 106 |
| 178-9566 | 248 |
| | 254 |
| 178-9983 | 719 |
| | 720 |
| | 723 |
| | 726 |
| 179-1215 | 178 |
| 179-5434 | 131 |
| | 132 |
| 179-5435 | 133 |
| | 136 |
| | 138 |
| | 140 |
| | 142 |
| 179-5571 | 336 |
| 179-5592 | 585 |
| 179-5593 | 542 |
| | 543 |
| | ▶585 |
| 179-7135 | 454 |
| 179-7136 | 454 |
| 179-8235 | 352 |
| | 356 |
| | 359 |
| | 361 |
| | 362 |
| | 365 |
| | 367 |
| | 523 |
| 179-9961 | 588 |
| | 613 |
| 180-2441 | 65 |
| | 66 |
| 180-2531 | 464 |
| 180-3663 | ▶131 |
| | 161 |
| | 164 |
| 180-3664 | ▶132 |
| | 163 |
| 180-3730 | 102 |
| 180-3773 | 695 |
| 180-3774 | 696 |
| 180-4194 | 454 |
| | 458 |
| 180-5750 | 739 |
| 180-5754 | 739 |
| | 740 |
| 180-5755 | 740 |
| 180-5760 | 704 |
| | 705 |
| | 706 |
| | ▶739 |
| 180-5765 | 703 |
| | 711 |
| | ▶740 |
| 180-5770 | ▶775 |
| 180-5771 | ▶775 |
| 180-5772 | 705 |
| | 706 |
| | ▶775 |
| 180-5780 | 767 |
| 180-5781 | 767 |
| 180-5782 | 767 |
| 180-5783 | 767 |
| 180-5784 | 767 |
| 180-5785 | 767 |
| 180-5787 | 767 |
| 180-5788 | 767 |
| 180-5791 | 768 |
| 180-5793 | 778 |
| 180-5794 | 778 |
| 180-5795 | 765 |
| 180-5796 | 763 |
| 180-5797 | 763 |
| | 765 |
| 180-6110 | 374 |
| 180-6111 | 374 |
| 180-6213 | 533 |
| 180-6603 | 372 |
| | 374 |
| 180-7245 | 291 |
| 180-8170 | 298 |
| 180-9157 | 305 |
| 183-1276 | 15 |
| | ▶335 |
| 183-1277 | 335 |
| 183-1278 | 335 |
| 183-3121 | 359 |
| 183-3122 | 359 |
| 183-3125 | 359 |
| | 362 |
| 183-3127 | 359 |
| 183-3130 | 15 |
| | ▶359 |
| 183-3135 | 359 |
| 183-3136 | 361 |
| 183-3137 | 359 |
| 183-3150 | ▶361 |
| | 394 |
| 183-3151 | 361 |
| | 362 |
| 183-3153 | 361 |
| 183-3156 | 361 |
| 183-3159 | ▶362 |
| | 392 |
| 183-3757 | 609 |
| 183-3758 | 609 |
| 183-3887 | 86 |


▶ PRIMARY REFERENCE

# PART NUMBER INDEX


| Part | Page |
|---|---|
| | ▶746 |
| 183-4492 | 180 |
| 183-4843 | 440 |
| 183-4897 | ▶297 |
| | 705 |
| | 706 |
| 183-4898 | ▶298 |
| 183-4899 | 722 |
| 183-4991 | 724 |
| | 725 |
| | ▶727 |
| 183-4997 | ▶724 |
| | 726 |
| 183-4998 | 720 |
| | ▶725 |
| 183-6058 | 9 |
| | 11 |
| | 12 |
| | 14 |
| | ▶326 |
| 183-6059 | 1 |
| | 2 |
| | 3 |
| | 4 |
| | 5 |
| | 6 |
| | 7 |
| | 8 |
| | 10 |
| | 13 |
| | ▶329 |
| 183-6076 | 15 |
| | ▶603 |
| 183-6081 | 603 |
| 183-6084 | 603 |
| 183-6085 | 603 |
| 183-7581 | 196 |
| 183-8484 | 402 |
| | 404 |
| | 416 |
| 183-8486 | 402 |
| 183-8488 | 398 |
| 183-8490 | 398 |
| 183-8492 | 398 |
| 183-8494 | 398 |
| 183-8496 | 509 |
| | 513 |
| 183-8498 | 509 |
| | 513 |
| 183-8500 | 398 |
| 183-8502 | 398 |
| 183-8505 | 394 |
| | ▶509 |
| 183-8506 | 1 |
| | 2 |
| | 5 |
| | 6 |
| | 9 |
| | 10 |
| | 11 |
| | ▶398 |
| 183-8508 | 1 |
| | 2 |
| | 5 |
| | 6 |
| | ▶402 |
| 183-8509 | 10 |
| | ▶404 |
| 183-8510 | 405 |
| | 407 |
| | 408 |
| 183-8511 | 405 |
| 183-8512 | 400 |
| 183-8513 | 400 |
| 183-8514 | 400 |
| 183-8515 | 400 |
| 183-8516 | 511 |
| | 516 |
| 183-8517 | 511 |
| | 516 |
| 183-8518 | 400 |
| 183-8519 | 400 |
| 183-8521 | 491 |
| | 544 |
| | 546 |
| 183-8522 | 395 |
| | ▶511 |
| 183-8523 | 3 |
| | 4 |
| | 7 |
| | 8 |
| | 13 |
| | 14 |
| | ▶491 |
| 183-8524 | 3 |
| | 4 |
| | 7 |
| | 8 |
| | 12 |
| | 13 |
| | 14 |
| | ▶400 |
| 183-8526 | 3 |
| | 4 |
| | 7 |
| | 8 |
| | ▶405 |
| 183-8527 | 13 |
| | ▶407 |
| 183-8529 | 493 |
| 183-8530 | 9 |
| | ▶493 |
| 183-8531 | 495 |
| 183-8532 | 12 |
| | ▶495 |
| 183-8543 | 1 |
| | 2 |
| | 3 |
| | 5 |
| | 6 |
| | 7 |
| | 8 |
| | 9 |
| | 10 |
| | 11 |
| | 12 |
| | 13 |
| | 14 |
| | ▶440 |
| 183-8544 | 1 |
| | 2 |
| | 3 |
| | 5 |
| | 6 |
| | 7 |
| | 8 |
| | 9 |
| | 10 |
| | 11 |
| | 12 |
| | 13 |
| | 14 |
| | ▶501 |
| 183-8547 | 2 |
| | 3 |
| | 4 |
| | 6 |
| | 8 |
| | ▶502 |
| 183-8548 | 1 |
| | 3 |
| | 4 |
| | 5 |
| | 7 |
| | ▶505 |
| 183-8549 | 1 |
| | 2 |
| | 4 |
| | 5 |
| | 6 |
| | 7 |
| | 8 |
| | 9 |
| | 10 |
| | 11 |
| | 12 |
| | 13 |
| | 14 |
| | ▶451 |
| 183-8552 | 391 |
| | 392 |
| | ▶454 |
| 183-8559 | 393 |
| | 394 |
| | ▶458 |
| 184-1307 | 613 |
| 184-1413 | 606 |
| 184-1580 | 388 |
| 184-1687 | 381 |
| 184-2365 | 388 |
| 184-2409 | 388 |
| 184-2422 | 193 |
| 184-5293 | 185 |
| | 187 |
| 184-5382 | 523 |
| 184-6178 | 9 |
| | 10 |
| | 11 |
| | 12 |
| | 13 |
| | 14 |
| | ▶613 |
| 184-6430 | 198 |
| 184-6436 | 320 |
| 184-6555 | 738 |
| 184-6557 | 726 |
| 184-6558 | 723 |
| 184-6560 | 698 |
| | 741 |
| 184-6561 | 698 |
| | 741 |
| 184-6562 | 735 |
| 184-6563 | 735 |
| | 737 |
| 184-6564 | 698 |
| | 741 |
| 184-6565 | 749 |
| 184-6566 | 723 |
| 184-6567 | 698 |
| | 741 |
| 184-6570 | 239 |
| | ▶291 |
| 184-6572 | 698 |
| | 741 |
| 184-6573 | 698 |
| | 741 |
| 184-6574 | 698 |
| | 741 |
| 184-6575 | ▶738 |
| | 741 |
| 184-6581 | 292 |
| 184-6784 | ▶592 |
| | 609 |
| | 611 |
| 184-6785 | 609 |
| 184-6786 | 5 |
| | 6 |
| | 7 |
| | 8 |
| | ▶609 |
| 184-7898 | 239 |
| | ▶756 |
| 184-7970 | 16 |
| | ▶239 |
| 184-9754 | 1 |
| | 2 |
| | 3 |
| | 4 |
| | ▶611 |
| 184-9950 | 1 |
| | 2 |
| | 3 |
| | 4 |
| | 5 |
| | 6 |
| | 7 |
| | 8 |
| | ▶604 |
| 184-9956 | 604 |
| 184-9992 | 611 |
| 185-0060 | ▶391 |
| 185-0061 | ▶391 |
| 185-0062 | ▶392 |
| 185-0063 | ▶392 |
| 185-0080 | 15 |
| | ▶320 |
| 185-0882 | 32 |
| 185-0884 | 29 |
| 185-1502 | 381 |
| 185-1546 | 50 |


▶ PRIMARY REFERENCE

# PART NUMBER INDEX


| Part | Page |
|---|---|
| 185-1598 | 391 |
| | 392 |
| | 393 |
| | 394 |
| | ▶525 |
| 185-1839 | ▶382 |
| | 615 |
| | 616 |
| | 618 |
| | 619 |
| | 620 |
| 185-1927 | ▶588 |
| | 589 |
| 185-1932 | 16 |
| | ▶589 |
| 185-2173 | 499 |
| 185-2175 | 499 |
| 185-2176 | 499 |
| 185-2183 | 499 |
| 185-3167 | 396 |
| | 397 |
| | ▶526 |
| 185-3414 | 396 |
| | ▶497 |
| 185-3524 | 703 |
| | 704 |
| | 705 |
| | 706 |
| | ▶720 |
| 185-3525 | 239 |
| | 240 |
| | ▶757 |
| 185-3528 | 735 |
| | 737 |
| 185-3529 | 297 |
| | 298 |
| 185-3530 | 711 |
| | ▶726 |
| 185-3890 | 778 |
| 185-4015 | 700 |
| | 743 |
| 185-5734 | 606 |
| 185-5735 | 606 |
| 185-5908 | 542 |
| | ▶551 |
| 185-5909 | 542 |
| | ▶553 |
| 185-5910 | 543 |
| | ▶556 |
| 185-5911 | 393 |
| | ▶547 |
| 185-5912 | 394 |
| | ▶549 |
| 185-5913 | 391 |
| | ▶548 |
| 185-5914 | 392 |
| | ▶550 |
| 185-7015 | 131 |
| 185-7016 | 132 |
| 185-7586 | 239 |
| | 240 |
| | ▶247 |
| 185-7587 | 239 |
| | 240 |
| | ▶247 |
| 185-7741 | 15 |
| | ▶804 |
| 185-7754 | 15 |
| | ▶805 |
| 185-8801 | ▶178 |
| | 703 |
| | 704 |
| | 705 |
| | 706 |
| 185-8802 | ▶180 |
| | 711 |
| 185-8807 | 15 |
| | ▶203 |
| 185-8811 | ▶144 |
| 185-8815 | ▶133 |
| | 705 |
| | 706 |
| 185-8857 | 15 |
| | ▶324 |
| 185-9751 | 397 |
| | ▶499 |
| 185-9777 | 758 |
| 185-9784 | 396 |
| | 397 |
| | ▶541 |
| 186-0252 | 703 |
| | 704 |
| | 705 |
| | 706 |
| | 711 |
| | ▶728 |
| 186-0304 | 115 |
| | ▶196 |
| 186-0307 | ▶215 |
| | 538 |
| 186-0309 | ▶217 |
| | 230 |
| 186-0310 | ▶115 |
| 186-0311 | ▶206 |
| | 348 |
| 186-0312 | ▶208 |
| | 348 |
| | 397 |
| 186-0314 | ▶146 |
| 186-0315 | ▶149 |
| 186-0316 | ▶152 |
| 186-0320 | 215 |
| 186-0817 | 785 |
| 186-1593 | 4 |
| | 7 |
| | 8 |
| | 12 |
| | 13 |
| | 14 |
| 186-1594 | 1 |
| | 2 |
| | 4 |
| | 5 |
| | 6 |
| | 9 |
| | 10 |
| | 11 |
| | ▶444 |
| 186-2589 | ▶755 |
| | 797 |
| 186-2731 | ▶193 |
| | 703 |
| | 705 |
| 186-2737 | 17 |
| | 18 |
| | ▶161 |
| 186-2950 | 1 |
| | 2 |
| | 3 |
| | 4 |
| | 5 |
| | 6 |
| | 7 |
| | 8 |
| | 9 |
| | 10 |
| | 11 |
| | 12 |
| | 13 |
| | 14 |
| | ▶532 |
| 186-3735 | 101 |
| | 115 |
| | 120 |
| | 122 |
| | 124 |
| | 126 |
| | 133 |
| | 173 |
| | 176 |
| | 181 |
| | 189 |
| | 206 |
| | 208 |
| | 210 |
| | 212 |
| | 256 |
| | 262 |
| | 263 |
| | 265 |
| | 359 |
| | 392 |
| | 569 |
| | 571 |
| | 584 |
| | 585 |
| | 754 |
| | 755 |
| | 797 |
| 186-3736 | 261 |
| 186-4117 | 220 |
| 186-4118 | 220 |
| 186-5273 | 799 |
| 186-5274 | 799 |
| 186-5298 | 391 |
| | 392 |
| | 393 |
| | 394 |
| | 807 |
| 186-5300 | 805 |
| 186-5335 | ▶393 |
| 186-5336 | ▶393 |
| 186-5337 | ▶394 |
| 186-5338 | ▶394 |
| 186-6375 | ▶799 |
| | 804 |
| | 805 |
| 187-0523 | 575 |
| 187-0524 | 573 |
| 187-0527 | 573 |
| 187-0528 | 577 |
| 187-0529 | 577 |
| 187-0530 | 567 |
| 187-0532 | 569 |
| 187-0576 | 592 |
| 187-1644 | 183 |
| | 185 |
| | 187 |
| | 711 |
| 187-3162 | 458 |
| | 521 |
| 187-3163 | 458 |
| | 521 |
| 187-3164 | 458 |
| | 521 |
| 187-3166 | 458 |
| | 521 |
| 187-3510 | 372 |
| | 374 |
| 187-3825 | 609 |
| | 611 |
| 187-3826 | 609 |
| | 611 |
| 187-3827 | 609 |
| | 611 |
| 187-3828 | 609 |
| | 611 |
| 187-3830 | 609 |
| 187-3831 | 609 |
| 187-3832 | 611 |
| 187-3833 | 611 |
| 187-3834 | 611 |
| 187-3835 | 611 |
| 187-3836 | 611 |
| 187-3837 | 611 |
| 187-4052 | 609 |
| | 611 |
| 187-4329 | 521 |
| 187-4331 | 454 |
| | 519 |
| 187-4332 | 454 |
| | 519 |
| 187-4333 | 502 |
| | 505 |
| 187-4343 | 441 |
| 187-4344 | 502 |
| | 505 |
| 187-6075 | 278 |
| | 279 |
| 187-8093 | 136 |
| | 140 |
| 187-8094 | 133 |
| | 138 |
| | 142 |
| 187-8936 | 101 |
| 188-0857 | 307 |
| 188-0858 | 306 |
| 188-0859 | ▶306 |
| | 309 |


▶ **PRIMARY REFERENCE**

# PART NUMBER INDEX


| Part | Page |
|---|---|
| | 310 |
| 188-0860 | ►307 |
| | 309 |
| 188-0861 | 392 |
| | 806 |
| 188-0862 | 336 |
| 188-0863 | 183 |
| | 806 |
| 188-0865 | 336 |
| 188-2704 | 743 |
| 188-2706 | 700 |
| | 743 |
| 188-2708 | 700 |
| | 743 |
| 188-2709 | 700 |
| 188-2710 | 700 |
| 188-2711 | 700 |
| | 743 |
| 188-2712 | 700 |
| 188-2715 | 743 |
| 188-7471 | ►305 |
| | 547 |
| | 548 |
| | 549 |
| | 550 |
| 188-7760 | 721 |
| | 722 |
| 188-9097 | 15 |
| | ►474 |
| 188-9954 | 592 |
| 189-0148 | 187 |
| 189-0551 | 391 |
| | 392 |
| | ►519 |
| 189-0555 | 393 |
| | 394 |
| | ►521 |
| 189-2102 | 585 |
| 189-3610 | 753 |
| 189-3823 | 17 |
| | ►523 |
| 189-5746 | 256 |
| 189-6561 | 144 |
| 189-6562 | 144 |
| 189-6563 | 144 |
| 189-8797 | 391 |
| | 392 |
| | ►448 |
| 190-1288 | 17 |
| | 18 |
| 190-1289 | 18 |
| | 19 |
| 190-2802 | ►17 |
| 190-2803 | ►17 |
| 190-3450 | 544 |
| | 545 |
| | 546 |
| | 553 |
| | 554 |
| | 556 |
| | 557 |
| | ►565 |
| 190-4164 | 482 |
| | 483 |
| | 484 |
| | 485 |
| 190-5122 | 306 |
| | 307 |
| 190-5123 | 100 |
| 190-5128 | 354 |
| | 805 |
| 190-5129 | 806 |
| 190-5130 | 352 |
| | 806 |
| 190-5131 | 356 |
| 190-5132 | 698 |
| | 741 |
| | 806 |
| 190-5133 | 806 |
| 190-5134 | 356 |
| | 805 |
| 190-5136 | 805 |
| 190-5137 | 538 |
| | 805 |
| 190-5139 | 86 |
| | 805 |
| 190-6413 | ►18 |
| 190-7557 | 17 |
| | ►202 |
| | 705 |
| | 706 |
| 190-8954 | 230 |
| | ►477 |
| 190-8956 | 477 |
| 190-8957 | 347 |
| 190-9767 | 248 |
| 190-9838 | 90 |
| 191-4010 | 547 |
| | 548 |
| | 549 |
| | 550 |
| 191-4012 | 547 |
| | 549 |
| | ►567 |
| 191-4032 | 548 |
| | 550 |
| | ►569 |
| 191-4035 | 550 |
| | ►571 |
| 191-5011 | 596 |
| 191-5012 | 596 |
| 191-5104 | 758 |
| 191-6033 | 700 |
| | 743 |
| 191-6034 | 700 |
| 191-6035 | 700 |
| | 743 |
| 191-6149 | 388 |
| 191-6159 | 379 |
| 191-6550 | ►155 |
| 191-6551 | ►158 |
| 191-6558 | 376 |
| 191-6577 | 386 |
| | 387 |
| 191-7725 | 378 |
| | ►379 |
| 191-7727 | 379 |
| 191-7734 | 386 |
| 191-7735 | ►386 |
| | 396 |
| | 397 |
| 191-7738 | 387 |
| 191-8161 | ►387 |
| | 396 |
| | 397 |
| 191-9104 | 760 |
| | 805 |
| 191-9107 | 806 |
| 191-9110 | 338 |
| 191-9111 | 338 |
| 191-9113 | 225 |
| 191-9114 | ►225 |
| | 239 |
| 192-0845 | 248 |
| 192-0849 | 246 |
| | ►254 |
| 192-0850 | 256 |
| 192-3791 | ►381 |
| | 396 |
| | 397 |
| 192-3792 | 381 |
| 192-3849 | 381 |
| 192-3884 | ►388 |
| | 396 |
| | 397 |
| 192-3886 | 388 |
| 192-7355 | 758 |
| 192-7877 | 98 |
| 192-8775 | 458 |
| 193-0161 | 92 |
| 193-0618 | 98 |
| 193-0703 | 9 |
| | 10 |
| | 11 |
| | 12 |
| | 13 |
| | 14 |
| | ►441 |
| 193-1036 | 582 |
| 193-1509 | 760 |
| 193-1681 | 322 |
| | 323 |
| 193-1683 | 322 |
| | 323 |
| 193-1684 | 322 |
| | 323 |
| 193-1685 | 322 |
| | 323 |
| 193-1686 | 322 |
| | 323 |
| 193-1687 | 322 |
| | 323 |
| 193-1688 | 322 |
| | 323 |
| 193-1689 | 322 |
| | 323 |
| 193-2342 | 17 |
| | ►745 |
| 193-2343 | ►171 |
| 193-3124 | 551 |
| | 552 |
| | 553 |
| | 554 |
| | 556 |
| | 557 |
| | ►573 |
| 193-5914 | 808 |
| 193-5915 | 808 |
| 193-5916 | 808 |
| 193-8639 | 181 |
| 193-8648 | 533 |
| 193-9189 | 551 |
| | 552 |
| | 553 |
| | 554 |
| | 556 |
| | 557 |
| 194-0832 | 276 |
| 194-1937 | 181 |
| | 210 |
| | 212 |
| 194-1938 | 181 |
| | 210 |
| | 212 |
| 194-1940 | 181 |
| 194-1941 | 181 |
| | 210 |
| | 212 |
| 194-1947 | ►210 |
| | 348 |
| 194-1948 | ►212 |
| | 348 |
| | 349 |
| 194-1950 | ►181 |
| 194-4250 | 758 |
| 194-5171 | 797 |
| 194-5390 | 84 |
| 194-5622 | 698 |
| | 741 |
| 195-0268 | 441 |
| 195-0355 | 497 |
| | 499 |
| 195-0356 | 497 |
| | 499 |
| 195-0357 | 497 |
| | 499 |
| 195-0358 | 497 |
| | 499 |
| 195-1289 | 487 |
| 195-1736 | 487 |
| 195-2037 | 300 |
| 195-2132 | 40 |
| 195-2134 | 40 |
| 195-2136 | 40 |
| 195-2139 | 559 |
| | 561 |
| | 563 |
| | 565 |
| | 567 |
| | 569 |
| | 571 |
| | 573 |
| | 575 |
| | 577 |
| 195-2221 | 40 |
| 195-2406 | 563 |
| | 573 |
| | 575 |
| | 577 |
| 195-5830 | 292 |


► PRIMARY REFERENCE

# PART NUMBER INDEX


| Part | Page |
|---|---|
| 195-6329 | 275 |
| 195-6330 | 267 |
| | ▶275 |
| 195-6331 | 267 |
| | ▶275 |
| 195-6332 | ▶267 |
| | 270 |
| 195-6339 | 277 |
| | 280 |
| 195-6523 | 338 |
| 195-7055 | 768 |
| | 770 |
| | 772 |
| 195-9223 | 763 |
| | 765 |
| | 768 |
| 195-9712 | 128 |
| 196-2966 | 185 |
| 196-4096 | 16 |
| 196-8438 | 509 |
| | 511 |
| | 513 |
| | 516 |
| 196-8439 | 509 |
| | 511 |
| | 513 |
| | 516 |
| 197-0398 | 485 |
| 197-0573 | 441 |
| 197-2709 | 565 |
| | 573 |
| | 575 |
| | 577 |
| 197-2969 | 551 |
| | 552 |
| | 553 |
| | 554 |
| | 556 |
| | 557 |
| 197-3121 | 567 |
| | 569 |
| | 571 |
| 197-3124 | 569 |
| 197-3126 | 569 |
| 197-3698 | 567 |
| | 569 |
| | 571 |
| 197-3709 | 371 |
| 197-4938 | 371 |
| 197-6415 | 371 |
| 197-6657 | 778 |
| 197-6658 | 778 |
| 197-7230 | 730 |
| 197-7499 | 758 |
| 197-7564 | 711 |
| | ▶730 |
| 197-8444 | 497 |
| | 499 |
| 197-8973 | 776 |
| 197-9155 | 218 |
| 198-0014 | 611 |
| 198-0015 | 611 |
| 198-0098 | 365 |
| 198-0102 | 392 |
| | 394 |
| | 806 |
| 198-0103 | 729 |
| 198-0104 | 711 |
| | ▶729 |
| 198-5389 | 115 |
| 198-6886 | 723 |
| 198-7336 | 448 |
| 198-7337 | 448 |
| 198-7814 | 234 |
| | 235 |
| 198-7823 | 218 |
| 198-7825 | 218 |
| 198-7838 | 218 |
| 198-7841 | 218 |
| 198-7842 | 218 |
| 198-7843 | 218 |
| 198-8352 | 450 |
| 198-8353 | 450 |
| 198-8645 | 25 |
| 198-9723 | ▶58 |
| | 703 |
| | 704 |
| | 705 |
| | 706 |
| 199-0639 | 218 |
| 199-0648 | 234 |
| | 235 |
| 199-0683 | 218 |
| 199-0695 | 227 |
| 199-0783 | 318 |
| 199-0858 | 227 |
| 199-3117 | 256 |
| | ▶264 |
| 199-3729 | 700 |
| | 743 |
| 199-5970 | ▶641 |
| | 642 |
| 199-5971 | ▶642 |
| 199-6243 | 749 |
| | 807 |
| 199-6245 | 805 |
| 199-7854 | 525 |
| 199-8927 | 440 |
| | 451 |
| 199-9267 | 54 |
| 199-9617 | ▶408 |
| 199-9618 | ▶412 |
| 199-9695 | ▶416 |
| 199-9696 | ▶420 |
| 199-9751 | 32 |
| | 170 |
| **2** | |
| 200-0161 | 551 |
| | 553 |
| | 556 |
| 200-0648 | 133 |
| | 136 |
| | 138 |
| | 140 |
| | 142 |
| 200-2673 | 721 |
| | 722 |
| 200-2676 | 703 |
| | 704 |
| | 705 |
| | 706 |
| | ▶713 |
| 200-2996 | 206 |
| | 208 |
| | 210 |
| | 212 |
| 200-3004 | 776 |
| 200-3946 | 347 |
| 200-3947 | 347 |
| 200-4153 | 393 |
| | 394 |
| | ▶450 |
| 200-5356 | 776 |
| 200-5359 | 582 |
| 200-5360 | 582 |
| 200-5361 | 582 |
| 200-5362 | 582 |
| 200-5363 | 582 |
| 200-5364 | 582 |
| 200-5921 | 677 |
| | 678 |
| 201-0330 | 102 |
| 201-0582 | 324 |
| 201-1238 | 643 |
| | 644 |
| | 645 |
| | 646 |
| | 647 |
| | 648 |
| | 649 |
| | 650 |
| | 651 |
| | 652 |
| | 653 |
| | 654 |
| | 655 |
| | 656 |
| | 657 |
| | 658 |
| | 659 |
| | 660 |
| | 661 |
| | 662 |
| 201-1239 | 643 |
| | 644 |
| | 645 |
| | 646 |
| | 647 |
| | 648 |
| | 649 |
| | 650 |
| | 651 |
| | 652 |
| | 653 |
| | 654 |
| | 655 |
| | 656 |
| | 657 |
| | 658 |
| | 659 |
| | 660 |
| | 661 |
| 201-1634 | 700 |
| | 743 |
| 201-1635 | 700 |
| 201-1636 | 700 |
| 201-1637 | 743 |
| 201-1638 | 743 |
| 201-1835 | 102 |
| 201-1837 | 100 |
| 201-1868 | 270 |
| | ▶276 |
| 201-1869 | ▶276 |
| 201-1870 | 276 |
| 201-1874 | 267 |
| | 268 |
| | ▶277 |
| 201-1875 | ▶277 |
| 201-1876 | 277 |
| 201-1879 | 279 |
| 201-1880 | 288 |
| 201-1915 | 276 |
| | 277 |
| | 278 |
| | 280 |
| | 283 |
| | 284 |
| 201-1919 | 278 |
| | 280 |
| | 283 |
| | 284 |
| 201-1920 | ▶267 |
| | 276 |
| | 277 |
| | 278 |
| | 279 |
| | 280 |
| | 283 |
| | 284 |
| 201-1929 | 280 |
| 201-1949 | 270 |
| | ▶278 |
| 201-1955 | 270 |
| | 271 |
| | ▶278 |
| 201-1956 | ▶278 |
| 201-1957 | 278 |
| | ▶279 |
| 201-1960 | 278 |
| | ▶279 |
| 201-1961 | 278 |
| | ▶279 |
| 201-1962 | 269 |
| | ▶280 |
| 201-1963 | 280 |
| 201-1964 | ▶280 |
| 201-1974 | 287 |
| | 288 |
| 201-1975 | 287 |
| 201-2157 | 292 |
| 201-3954 | ▶318 |
| 201-4822 | 320 |
| 201-8069 | 359 |
| 201-8562 | 245 |
| | ▶248 |
| 201-9465 | 791 |


▶ PRIMARY REFERENCE

# PART NUMBER INDEX


| Part | Page |
|---|---|
| 202-0040 | 262 |
| | 263 |
| | 264 |
| | 265 |
| 202-2236 | ▶371 |
| | 552 |
| | 554 |
| | 557 |
| 202-5705 | 133 |
| | 136 |
| | 138 |
| 202-5707 | ▶136 |
| 202-5708 | ▶138 |
| 202-5710 | 230 |
| | 806 |
| 202-5711 | 230 |
| | ▶300 |
| 202-5724 | 705 |
| | 706 |
| | ▶758 |
| 202-5732 | 240 |
| | ▶243 |
| 202-5733 | 239 |
| | 240 |
| | ▶244 |
| 202-5812 | ▶760 |
| 202-5979 | 758 |
| 202-6008 | ▶245 |
| | 247 |
| 202-6018 | 409 |
| | 412 |
| | 416 |
| | 420 |
| | 424 |
| | 428 |
| | 432 |
| | 436 |
| 202-6063 | 758 |
| 202-6113 | 86 |
| 202-6120 | 395 |
| | ▶513 |
| 202-6121 | 395 |
| | ▶516 |
| 202-6122 | ▶394 |
| 202-6123 | ▶395 |
| 202-6124 | ▶395 |
| 202-6125 | ▶395 |
| 202-6139 | ▶347 |
| | 396 |
| | 397 |
| 202-6141 | 724 |
| 202-6142 | 725 |
| 202-6186 | 276 |
| | 278 |
| | 279 |
| | 280 |
| | 283 |
| | 284 |
| 202-6199 | 230 |
| | ▶237 |
| 202-6611 | 119 |
| 202-6614 | 118 |
| 202-7432 | ▶246 |
| | 247 |
| 202-7503 | 582 |
| 202-7874 | 244 |
| 202-7875 | 243 |
| 203-4158 | 711 |
| 203-5486 | 542 |
| | ▶552 |
| 203-5487 | 543 |
| | ▶554 |
| 203-5488 | 543 |
| | ▶557 |
| 203-5491 | 526 |
| 203-9048 | 445 |
| 204-0317 | 300 |
| 204-0532 | 551 |
| | 552 |
| | 553 |
| | 554 |
| | 556 |
| | 557 |
| | ▶575 |
| 204-0533 | 551 |
| | 552 |
| | 553 |
| | 554 |
| | 556 |
| | 557 |
| | ▶577 |
| 204-5258 | 687 |
| 204-5259 | 687 |
| 204-5260 | 687 |
| 204-5261 | 18 |
| | 19 |
| | ▶687 |
| | 688 |
| 204-7341 | 724 |
| | 725 |
| 204-9195 | ▶544 |
| 204-9196 | ▶544 |
| 204-9197 | ▶545 |
| 204-9198 | ▶545 |
| 204-9199 | ▶546 |
| 204-9200 | ▶546 |
| 204-9204 | 408 |
| | 412 |
| | 424 |
| | 428 |
| 204-9921 | 700 |
| | 743 |
| 205-0826 | 115 |
| 205-3759 | 292 |
| 205-3760 | 292 |
| 205-3761 | 292 |
| 205-4286 | 185 |
| | 187 |
| 205-7536 | 791 |
| 205-7538 | 791 |
| 205-7700 | 183 |
| 205-8257 | 115 |
| 205-9244 | 256 |
| 205-9980 | 720 |
| | 726 |
| 206-0513 | 372 |
| 206-0514 | 9 |
| | 10 |
| | 11 |
| | 12 |
| | 13 |
| | 14 |
| | ▶372 |
| 206-0517 | 374 |
| 206-0518 | 1 |
| | 2 |
| | 3 |
| | 4 |
| | 5 |
| | 6 |
| | 7 |
| | 8 |
| | ▶374 |
| 206-1486 | 214 |
| 206-3407 | 17 |
| | 18 |
| | ▶688 |
| 206-3409 | ▶18 |
| 206-3411 | 17 |
| | 18 |
| 206-3629 | 376 |
| 206-3630 | ▶376 |
| | 396 |
| | 397 |
| 206-3685 | 513 |
| | 516 |
| 206-4924 | ▶19 |
| 206-5162 | 115 |
| 206-6974 | 297 |
| 206-7398 | 700 |
| | 743 |
| 206-7512 | 698 |
| | 741 |
| 206-7513 | 698 |
| | 741 |
| 206-7514 | 698 |
| | 741 |
| 207-4254 | 218 |
| 207-4258 | 218 |
| 207-5262 | 115 |
| 207-5477 | 440 |
| 207-7581 | 521 |
| 207-8593 | 458 |
| 207-8594 | 458 |
| 207-8595 | 458 |
| 207-8596 | 454 |
| 207-8597 | 454 |
| 207-8598 | 451 |
| 208-0321 | 218 |
| 208-0322 | 227 |
| 208-0827 | ▶620 |
| 208-5235 | 643 |
| | 644 |
| | 645 |
| | 646 |
| | 647 |
| | 648 |
| | 649 |
| | 650 |
| | 651 |
| | 652 |
| | 653 |
| | 654 |
| | 655 |
| | 656 |
| | 657 |
| | 658 |
| | 659 |
| | 660 |
| | 661 |
| | 662 |
| 208-5245 | 643 |
| | 644 |
| | 645 |
| | 646 |
| | 647 |
| | 648 |
| | 649 |
| | 650 |
| | 651 |
| | 652 |
| | 653 |
| | 654 |
| | 655 |
| | 656 |
| | 657 |
| | 658 |
| | 659 |
| | 660 |
| | 661 |
| | 662 |
| 208-8240 | 250 |
| 208-8658 | ▶390 |
| 209-1925 | 176 |
| 209-1947 | 176 |
| 209-6188 | 324 |
| 209-7454 | 227 |
| 209-7456 | 218 |
| 209-7460 | 234 |
| | 235 |
| 209-7462 | 227 |
| 209-7463 | 227 |
| 209-7464 | 218 |
| 209-7465 | 234 |
| | 235 |
| 209-7466 | 238 |
| 209-7472 | 227 |
| 209-7473 | 227 |
| 209-9219 | 31 |
| 209-9241 | 372 |
| 209-9875 | 218 |
| 209-9883 | 218 |
| 209-9884 | 218 |
| | ▶234 |
| 209-9885 | 218 |
| | ▶235 |
| 209-9886 | 218 |
| 209-9887 | 218 |
| 210-1706 | 326 |
| | 329 |
| 210-1707 | 326 |
| | 329 |
| 210-5924 | 218 |
| | ▶238 |
| 210-5931 | 238 |
| 210-5934 | 238 |
| 210-5937 | 218 |
| 210-5942 | 218 |
| 210-5946 | 218 |
| 210-5947 | 218 |


▶ PRIMARY REFERENCE

# PART NUMBER INDEX


| Part | Page |
|---|---|
| 210-6243 | 396 |
| | 397 |
| 210-7029 | 388 |
| 210-7465 | 300 |
| 210-7466 | 300 |
| 210-8911 | 603 |
| 210-8913 | 603 |
| 210-8914 | 363 |
| | 364 |
| 210-8916 | 474 |
| 210-8917 | 363 |
| | 364 |
| 210-8918 | ▶538 |
| 210-8919 | ▶538 |
| 210-8922 | 338 |
| 211-0052 | 198 |
| 211-1813 | 115 |
| 211-3372 | 391 |
| | 392 |
| | 393 |
| | 394 |
| 211-3468 | 486 |
| 211-4348 | 479 |
| 211-6735 | 218 |
| 211-6758 | 248 |
| 211-6759 | 249 |
| 212-3518 | 292 |
| 212-6215 | 247 |
| 212-9338 | 441 |
| 213-6091 | 110 |
| 213-6092 | 110 |
| 213-6094 | 189 |
| 213-6097 | 198 |
| 213-7315 | 173 |
| | 193 |
| 213-8000 | ▶681 |
| 213-8008 | 681 |
| | ▶682 |
| 213-8479 | 155 |
| | 158 |
| | 178 |
| 213-8481 | 331 |
| 213-9270 | 700 |
| | 743 |
| 213-9803 | 582 |
| 213-9804 | 533 |
| | ▶582 |
| 214-0592 | 581 |
| 214-1669 | 308 |
| 214-1670 | 308 |
| 214-3159 | 300 |
| 214-3520 | 66 |
| 214-5097 | 218 |
| 214-6891 | ▶20 |
| 214-6893 | ▶21 |
| 214-6908 | 15 |
| | ▶100 |
| 214-6948 | 102 |
| 214-6949 | 100 |
| | ▶101 |
| 214-6993 | ▶16 |
| 214-6994 | ▶16 |
| 214-7004 | ▶711 |
| 214-7006 | ▶703 |
| 214-7007 | ▶704 |
| 214-7008 | ▶705 |
| 214-7009 | ▶706 |
| 214-7012 | ▶239 |
| 214-7013 | ▶239 |
| 214-7014 | ▶240 |
| 214-7015 | ▶240 |
| 214-7457 | 67 |
| | 70 |
| 214-7458 | 67 |
| | 70 |
| 214-9035 | 758 |
| 214-9348 | 513 |
| | 516 |
| 214-9349 | 513 |
| | 516 |
| 215-1216 | 682 |
| 215-1217 | 682 |
| 215-1383 | 464 |
| 215-1384 | 464 |
| 215-2023 | 218 |
| 215-3191 | 452 |
| 215-4016 | 454 |
| | 519 |
| 215-4424 | 486 |
| 215-5643 | 608 |
| 215-9219 | 533 |
| 215-9508 | 88 |
| 215-9509 | 88 |
| 215-9513 | 90 |
| 215-9632 | 479 |
| 216-0582 | 454 |
| | 519 |
| 216-2267 | 250 |
| 216-4457 | 227 |
| 216-4458 | 227 |
| 216-4461 | 227 |
| 216-4464 | 227 |
| 216-4465 | 227 |
| 216-5515 | 227 |
| 216-7145 | 513 |
| | 516 |
| 216-7374 | 681 |
| 216-7375 | 682 |
| 216-7376 | 682 |
| 216-7377 | 682 |
| 216-7473 | 218 |
| 216-7660 | 454 |
| 216-8314 | 27 |
| 216-8633 | 37 |
| 216-8634 | 37 |
| 216-8687 | 229 |
| 216-8689 | 229 |
| 216-8700 | 229 |
| 216-9111 | 283 |
| 216-9112 | 281 |
| 216-9113 | 282 |
| 216-9117 | 268 |
| | ▶281 |
| 216-9118 | 281 |
| 216-9119 | 281 |
| 216-9123 | 268 |
| | ▶282 |
| 216-9124 | ▶282 |
| 216-9125 | 282 |
| 216-9147 | 268 |
| | ▶283 |
| 216-9148 | 283 |
| 216-9149 | 283 |
| 216-9498 | 227 |
| | ▶229 |
| 217-2704 | 513 |
| | 516 |
| 217-2877 | 234 |
| 217-2878 | 235 |
| 217-2879 | 234 |
| | 235 |
| 217-2880 | 227 |
| 217-2883 | 218 |
| 217-2884 | 218 |
| 217-2885 | 218 |
| 217-3383 | 363 |
| | 364 |
| 217-6835 | ▶800 |
| 218-2152 | 712 |
| 218-2153 | 707 |
| 218-2154 | 709 |
| 218-3597 | 264 |
| 219-0305 | 807 |
| 219-3271 | 114 |
| 219-3379 | ▶643 |
| | 663 |
| 219-3380 | ▶644 |
| 219-3381 | ▶645 |
| 219-3382 | ▶646 |
| 219-3383 | ▶647 |
| 219-3384 | ▶648 |
| | 664 |
| 219-3385 | ▶649 |
| 219-3386 | ▶650 |
| 219-3387 | ▶651 |
| 219-3388 | ▶652 |
| 219-3389 | ▶653 |
| 219-3390 | ▶654 |
| 219-3391 | ▶655 |
| 219-3392 | ▶656 |
| 219-3393 | ▶657 |
| 219-3394 | ▶658 |
| | 665 |
| 219-3395 | ▶659 |
| 219-3396 | ▶660 |
| 219-3397 | ▶661 |
| 219-3398 | ▶662 |
| 219-3410 | ▶663 |
| 219-3411 | ▶664 |
| 219-3412 | ▶665 |
| 219-6314 | 115 |
| 219-8656 | ▶165 |
| 219-8751 | 227 |
| 219-8752 | 227 |
| 219-8753 | 227 |
| 219-8754 | 227 |
| 219-8755 | 227 |
| 219-8756 | 227 |
| 219-8757 | 227 |
| 219-8758 | 227 |
| 219-8759 | 227 |
| 219-8783 | 238 |
| 219-8798 | 218 |
| 219-9486 | 662 |
| 220-0248 | 477 |
| 220-0921 | 513 |
| | 516 |
| 220-2639 | ▶762 |
| 220-2640 | ▶762 |
| 220-8631 | 36 |
| 220-8698 | ▶117 |
| | 144 |
| 221-0965 | 338 |
| 221-0966 | 338 |
| 221-0968 | 338 |
| 221-0972 | 338 |
| 221-0973 | 338 |
| 221-0974 | 338 |
| 221-0976 | 338 |
| 221-2420 | 741 |
| 221-7170 | 598 |
| 221-8045 | 807 |
| 221-8444 | 338 |
| 222-0364 | 541 |
| 222-0365 | ▶350 |
| | 363 |
| 222-0841 | 326 |
| | 329 |
| 222-1684 | 487 |
| 222-1801 | 318 |
| 222-1802 | 318 |
| 222-2690 | 86 |
| 222-3870 | 115 |
| 222-4067 | 539 |
| 222-5794 | 185 |
| | 806 |
| 222-9436 | ▶351 |
| | 364 |
| 223-1882 | ▶692 |
| 223-5623 | 108 |
| 223-5624 | 108 |
| 223-6178 | ▶308 |
| | 309 |
| 223-6181 | ▶108 |
| | 309 |
| 223-6539 | 185 |
| | ▶754 |
| 223-8181 | 250 |
| | ▶265 |
| 224-0672 | 487 |
| | 807 |
| 224-3385 | 115 |
| 224-6193 | 196 |
| 224-8945 | 338 |
| 224-8946 | 807 |
| 224-9855 | 805 |
| 225-0312 | 807 |
| 225-3145 | 103 |
| 225-3281 | 385 |
| 225-4150 | 807 |
| 225-4257 | 807 |
| 225-4317 | 22 |
| | 23 |
| | ▶47 |
| 225-5436 | 45 |
| 225-5437 | 45 |
| 225-5438 | 45 |
| 225-5439 | 45 |
| 225-5441 | 45 |
| 225-5451 | 45 |


▶ PRIMARY REFERENCE

# PART NUMBER INDEX


| Part | Page |
|---|---|
| 225-5453 | 45 |
| 225-5454 | 45 |
| 225-5458 | 45 |
| 225-5459 | 45 |
| 225-5493 | 32 |
| 225-5494 | 32 |
| 225-5495 | 32 |
| 225-5496 | 32 |
| 225-5497 | 32 |
| 225-5498 | 32 |
| 225-5499 | 32 |
| 225-5501 | 33 |
| 225-5502 | 33 |
| 225-5625 | 50 |
| 225-5629 | 50 |
| 225-5634 | 50 |
| 225-5638 | 50 |
| 225-5640 | 50 |
| 225-5959 | 50 |
| 225-5960 | 50 |
| 225-5961 | 50 |
| 225-5962 | 50 |
| 225-5963 | 50 |
| 225-5967 | 24 |
| 225-6004 | 43 |
| 225-6005 | 43 |
| 225-6041 | 43 |
| 225-6455 | 25 |
| 225-6517 | 25 |
| 225-6522 | 25 |
| 225-6817 | 54 |
| 225-6818 | 54 |
| 225-6820 | 54 |
| 225-6908 | 53 |
| 225-6909 | 53 |
| 225-7738 | 63 |
| 225-7739 | 63 |
| 225-7741 | 63 |
| 225-7772 | 27 |
| 225-7781 | 27 |
| 225-7941 | 54 |
| 225-7944 | 29 |
| | 54 |
| 225-8016 | 63 |
| 225-8019 | 63 |
| 225-8278 | 37 |
| 225-8280 | 37 |
| 225-8281 | 37 |
| 225-8282 | 37 |
| 225-8329 | 52 |
| 225-8524 | 84 |
| 225-8526 | 84 |
| 225-8530 | 84 |
| 225-8533 | 84 |
| 225-8534 | 84 |
| 225-8536 | 84 |
| 225-8848 | 39 |
| 225-8858 | 29 |
| 225-9303 | 78 |
| | 79 |
| 226-1240 | 807 |
| 226-4346 | 234 |
| | 235 |
| 226-4365 | 234 |
| | 235 |
| 226-4366 | 234 |
| | 235 |
| 226-4370 | 234 |
| | 235 |
| 226-5633 | 513 |
| | 516 |
| 226-5634 | 513 |
| | 516 |
| 226-7164 | 185 |
| | 187 |
| 226-7811 | 709 |
| 226-7812 | 709 |
| 226-8202 | 379 |
| | 382 |
| 226-9095 | 703 |
| | 704 |
| | ▶709 |
| 227-4376 | 69 |
| | 72 |
| 227-4709 | 303 |
| 227-7447 | 75 |
| 227-7448 | 75 |
| 227-7449 | 75 |
| 228-0297 | 698 |
| 228-0298 | 698 |
| 228-0560 | 698 |
| 228-4284 | 698 |
| 228-4587 | ▶309 |
| 228-4588 | ▶309 |
| 228-4589 | ▶309 |
| 228-4590 | ▶309 |
| 228-4591 | ▶310 |
| 228-4592 | 350 |
| | 351 |
| 228-4593 | 350 |
| | 351 |
| 228-4594 | 350 |
| | 351 |
| 228-4595 | 350 |
| 228-4596 | 350 |
| | 351 |
| 228-4597 | 350 |
| | 351 |
| 228-5730 | ▶363 |
| | 538 |
| 228-5731 | ▶364 |
| | 538 |
| 228-6331 | 443 |
| | 444 |
| 228-9129 | ▶98 |
| | 99 |
| 228-9130 | 98 |
| 228-9132 | 98 |
| 229-1203 | 363 |
| | 364 |
| 229-4896 | 25 |
| 229-5085 | 234 |
| | 235 |
| 229-5092 | 234 |
| | 235 |
| 229-5093 | 229 |
| 229-6051 | 776 |
| 229-6052 | 776 |
| 229-8182 | 183 |
| 229-8377 | 173 |
| | 193 |
| 229-8413 | 173 |
| | 193 |
| 229-9382 | 381 |
| | 386 |
| | 387 |
| | 388 |
| 229-9862 | 144 |
| 230-3809 | 289 |
| 230-3810 | 289 |
| 230-3811 | 289 |
| 230-4017 | 221 |
| 230-6368 | 110 |
| 230-7300 | 22 |
| | 23 |
| | ▶35 |
| 230-7353 | 22 |
| | 23 |
| | ▶49 |
| 230-7355 | 22 |
| | 23 |
| | ▶63 |
| 230-7569 | 22 |
| | 23 |
| | ▶48 |
| 230-7578 | 22 |
| | 23 |
| | ▶52 |
| 230-7649 | 446 |
| | 448 |
| | 454 |
| | 458 |
| 230-7650 | 446 |
| | 448 |
| | 455 |
| | 459 |
| 230-7651 | 446 |
| | 448 |
| | 454 |
| | 458 |
| 230-7886 | 93 |
| 230-8065 | 34 |
| 230-8094 | 43 |
| 230-8279 | 54 |
| 230-8989 | 93 |
| | 96 |
| 230-8995 | 93 |
| | 96 |
| 230-8996 | 93 |
| | 96 |
| 230-8997 | 93 |
| | 96 |
| 230-8998 | 93 |
| | 96 |
| 230-9127 | 25 |
| 230-9144 | 25 |
| 231-0030 | 53 |
| 231-0033 | 22 |
| | 23 |
| | ▶53 |
| 231-0046 | 48 |
| 231-0149 | 22 |
| | 23 |
| | ▶76 |
| 231-0676 | 234 |
| 231-0700 | 234 |
| | 235 |
| 231-0703 | 234 |
| | 235 |
| 231-0705 | ▶218 |
| | 230 |
| 231-3057 | 114 |
| 231-3058 | 114 |
| 231-3539 | 384 |
| 231-3540 | 376 |
| 231-7660 | 487 |
| 231-9352 | 230 |
| | 806 |
| 232-0252 | 479 |
| 232-1115 | 88 |
| 232-1322 | 32 |
| 232-1323 | 93 |
| | 96 |
| 232-1328 | 93 |
| | 96 |
| 232-1793 | 96 |
| 232-1794 | 93 |
| | 96 |
| 232-2725 | 93 |
| | 96 |
| 232-2726 | 93 |
| | 96 |
| 232-3126 | 88 |
| | 96 |
| 232-3149 | 93 |
| | 96 |
| 232-3157 | 93 |
| | 96 |
| 232-3158 | 93 |
| 232-3274 | 93 |
| | 96 |
| 232-3657 | 37 |
| 232-3666 | 37 |
| 232-3670 | 22 |
| | 23 |
| | ▶37 |
| 232-3722 | 54 |
| 232-3751 | 29 |
| | 54 |
| 232-3861 | 54 |
| 232-4706 | 754 |
| 232-5849 | 541 |
| 232-6177 | 22 |
| | 23 |
| | ▶54 |
| 232-6661 | 22 |
| | 23 |
| | ▶113 |
| 232-6662 | 113 |
| 232-7400 | 27 |
| 232-7439 | 22 |
| | 23 |
| | ▶27 |
| 232-7440 | 29 |
| 232-7442 | 22 |
| | 23 |
| | ▶45 |
| 232-7449 | 31 |
| 232-7454 | 29 |
| 232-7519 | ▶32 |


▶ PRIMARY REFERENCE

# PART NUMBER INDEX


| Part | Page |
|---|---|
| | 33 |
| 232-7524 | 22 |
| | 23 |
| | ►33 |
| 232-7526 | 22 |
| | 23 |
| | ►50 |
| 232-7528 | 22 |
| | 23 |
| | ►24 |
| 232-7596 | 29 |
| 232-7597 | 29 |
| 232-7599 | 29 |
| 232-7600 | 29 |
| 232-7603 | 29 |
| 232-7604 | ►29 |
| | 31 |
| 232-7606 | 22 |
| | 23 |
| | ►31 |
| 232-9737 | 115 |
| 232-9758 | 88 |
| 232-9759 | 88 |
| 233-2138 | 452 |
| 233-3784 | 27 |
| 233-3785 | 27 |
| 233-3786 | 27 |
| 233-3788 | 27 |
| 233-3789 | 27 |
| 233-3790 | 27 |
| 233-7432 | 22 |
| | 23 |
| | ►39 |
| 233-9417 | 23 |
| | ►88 |
| 233-9454 | 502 |
| 233-9530 | 103 |
| 233-9531 | 103 |
| 233-9532 | 103 |
| 234-1532 | 499 |
| 234-1533 | 499 |
| 234-1534 | 499 |
| 234-1535 | 499 |
| 234-1710 | ►114 |
| 234-1979 | 20 |
| | 21 |
| | ►73 |
| 234-1981 | 73 |
| | ►75 |
| 234-1991 | 20 |
| | 21 |
| | ►189 |
| 234-1992 | 189 |
| 234-2484 | 749 |
| 234-2485 | 749 |
| 234-2617 | 704 |
| | 706 |
| | ►749 |
| 234-2622 | 73 |
| 234-2842 | 284 |
| 234-2846 | 269 |
| | ►284 |
| 234-2847 | 284 |
| 234-2848 | 284 |
| 234-2849 | 285 |
| 234-2850 | 269 |
| | ►285 |
| 234-2851 | 285 |
| 234-2852 | ►285 |
| 234-2856 | 286 |
| 234-2857 | 269 |
| | ►286 |
| 234-2858 | ►286 |
| 234-2859 | 286 |
| 234-3029 | 84 |
| 234-3030 | 84 |
| 234-3059 | 20 |
| | ►22 |
| 234-3061 | 21 |
| | ►23 |
| 234-4328 | ►118 |
| | 140 |
| | 142 |
| 234-4329 | ►119 |
| | 142 |
| 234-5121 | 73 |
| | 81 |
| 234-6926 | 396 |
| | 397 |
| | ►539 |
| 234-6927 | 539 |
| 234-7509 | 51 |
| 234-7510 | 20 |
| | 21 |
| | ►51 |
| 234-7527 | ►232 |
| | 239 |
| | 240 |
| 234-7528 | ►233 |
| | 239 |
| | 240 |
| 234-7730 | 118 |
| | 119 |
| 234-7731 | 118 |
| | 119 |
| 234-7834 | ►65 |
| | 67 |
| 234-7836 | ►67 |
| 234-7954 | 51 |
| 234-8601 | 704 |
| | 706 |
| | ►715 |
| 234-8815 | 51 |
| | 539 |
| 234-8892 | 15 |
| | ►86 |
| 234-9066 | 336 |
| 234-9430 | 715 |
| 234-9554 | 715 |
| 234-9613 | 232 |
| 235-0128 | 86 |
| 235-0354 | 382 |
| 235-0973 | 376 |
| 235-1056 | 715 |
| 235-1790 | 93 |
| | 96 |
| 235-1966 | 67 |
| | 70 |
| 235-1967 | 67 |
| | 70 |
| 235-1974 | 65 |
| | ►69 |
| 235-1975 | 72 |
| 235-2491 | 51 |
| 235-2545 | ►341 |
| | 345 |
| 235-2612 | ►345 |
| 235-2854 | ►110 |
| 235-2972 | 20 |
| | 21 |
| | ►90 |
| 235-3170 | 20 |
| | 21 |
| | ►99 |
| 235-3420 | 20 |
| | 21 |
| | ►83 |
| 235-3556 | 22 |
| | 23 |
| 235-4110 | 396 |
| | 397 |
| | ►533 |
| 235-4551 | 396 |
| | 397 |
| | ►479 |
| 235-4553 | 479 |
| 235-4799 | 396 |
| | 397 |
| | ►486 |
| 235-5306 | 479 |
| 235-5363 | 83 |
| 235-5843 | 539 |
| 235-5855 | ►482 |
| | 543 |
| 235-5857 | ►483 |
| | 542 |
| | 543 |
| 235-5858 | ►484 |
| | 543 |
| 235-5861 | 348 |
| | 349 |
| | 397 |
| | ►487 |
| 235-5862 | 13 |
| | ►424 |
| 235-5864 | 3 |
| | 4 |
| | 8 |
| | ►428 |
| 235-5865 | 10 |
| | ►432 |
| 235-5867 | 2 |
| | 6 |
| | ►436 |
| 235-6017 | 472 |
| 235-6018 | 472 |
| 235-6019 | 472 |
| 235-6020 | 472 |
| 235-7091 | 479 |
| 235-8528 | 479 |
| 235-8747 | 170 |
| 235-8749 | 22 |
| | 23 |
| | ►170 |
| 235-9777 | 482 |
| | 483 |
| | 484 |
| | 485 |
| 235-9831 | ►385 |
| | 396 |
| | 397 |
| 235-9832 | 385 |
| 235-9833 | 385 |
| 235-9835 | 385 |
| 236-0695 | ►485 |
| | 542 |
| 236-1673 | 93 |
| | 96 |
| 236-1674 | 93 |
| | 96 |
| 236-2064 | 322 |
| 236-2066 | 323 |
| 236-2070 | 15 |
| | ►322 |
| 236-2072 | 15 |
| | ►323 |
| 236-2486 | 20 |
| | 21 |
| | ►77 |
| 236-2507 | 83 |
| 236-5606 | 341 |
| 236-5607 | 341 |
| 236-5608 | 341 |
| 236-5681 | 341 |
| 236-5807 | ►70 |
| 236-5808 | ►66 |
| | 70 |
| 236-5809 | 66 |
| | ►72 |
| 236-5860 | 77 |
| 236-6651 | 51 |
| 236-6652 | 51 |
| 236-6657 | 703 |
| | 705 |
| | ►747 |
| 236-6923 | 173 |
| 236-6954 | 326 |
| | 329 |
| 236-7295 | 232 |
| | 233 |
| 236-7528 | 451 |
| 236-7661 | 451 |
| 236-8228 | ►92 |
| | 93 |
| 236-8229 | 23 |
| | ►93 |
| 236-8238 | 22 |
| | 23 |
| | ►36 |
| 236-8241 | 22 |
| | 23 |
| | ►34 |
| 236-9900 | 409 |
| | 412 |
| | 416 |
| | 420 |
| | 424 |
| | 428 |
| | 432 |
| | 436 |


► PRIMARY REFERENCE

# PART NUMBER INDEX


| Part | Page |
|---|---|
| 236-9980 | 409 |
| | 412 |
| | 416 |
| | 420 |
| | 424 |
| | 428 |
| | 432 |
| | 436 |
| 237-0024 | 22 |
| | 23 |
| | ►168 |
| 237-0025 | 22 |
| | 23 |
| | ►43 |
| 237-0027 | 22 |
| | 23 |
| | ►103 |
| 237-0284 | 88 |
| 237-0285 | 88 |
| 237-0286 | 88 |
| 237-0632 | 487 |
| 237-0769 | 25 |
| 237-0803 | 326 |
| | 329 |
| 237-0975 | 83 |
| 237-0976 | 83 |
| 237-2197 | 99 |
| 237-2527 | 96 |
| 237-2528 | 22 |
| | ►96 |
| 237-2799 | 84 |
| 237-3655 | 176 |
| 237-3658 | 22 |
| | 23 |
| | ►40 |
| 237-3786 | 84 |
| 237-3791 | 84 |
| 237-3794 | 84 |
| 237-3797 | 539 |
| 237-3921 | 84 |
| 237-3922 | 84 |
| 237-3923 | 84 |
| 237-3924 | 22 |
| | 23 |
| | ►84 |
| 237-4157 | 75 |
| 237-4894 | 169 |
| 237-4896 | 22 |
| | 23 |
| | ►169 |
| 237-5330 | 326 |
| | 329 |
| 237-6463 | 16 |
| | ►230 |
| 237-7161 | 717 |
| 237-7162 | 718 |
| 237-8037 | ►176 |
| | 239 |
| | 240 |
| 237-9288 | ►15 |
| | 16 |
| 237-9289 | ►15 |
| | 16 |
| 237-9297 | 16 |
| | ►396 |
| 237-9298 | 16 |
| | ►397 |
| 237-9541 | 240 |
| | ►717 |
| 237-9542 | 240 |
| | ►718 |
| 238-1165 | 15 |
| | ►183 |
| 238-1166 | ►185 |
| | 703 |
| | 704 |
| | 711 |
| 238-1167 | ►187 |
| | 705 |
| | 706 |
| 238-1811 | ►173 |
| | 704 |
| | 706 |
| 238-1830 | 90 |
| 238-4441 | 338 |
| | 806 |
| 238-5257 | 227 |
| 238-5258 | 218 |
| | ►227 |
| 238-6700 | 15 |
| | ►805 |
| 238-6847 | 806 |
| 238-6955 | ►267 |
| 238-6956 | ►268 |
| 238-6957 | ►268 |
| 238-6959 | ►268 |
| 238-6960 | ►268 |
| 238-6963 | ►269 |
| 238-6964 | ►269 |
| 238-6965 | ►269 |
| 238-6966 | ►269 |
| 238-6967 | ►270 |
| 238-6970 | ►270 |
| 238-6971 | ►270 |
| 238-6973 | ►270 |
| 238-6974 | ►271 |
| 238-7492 | 173 |
| 238-8550 | 230 |
| | ►303 |
| 238-8671 | 96 |
| 238-8864 | 88 |
| 238-9192 | 73 |
| 238-9397 | 189 |
| 238-9672 | 269 |
| | ►271 |
| 238-9673 | 271 |
| | ►287 |
| 238-9674 | 271 |
| | ►287 |
| 238-9675 | 270 |
| | ►271 |
| 238-9676 | 271 |
| | ►287 |
| 238-9677 | 271 |
| | ►288 |
| 238-9678 | 270 |
| | 271 |
| | ►272 |
| 238-9679 | 272 |
| | ►288 |
| 238-9680 | 272 |
| | ►288 |
| 238-9828 | 20 |
| | ►78 |
| | 703 |
| | 704 |
| | 711 |
| 239-0225 | ►607 |
| 239-0226 | ►608 |
| 239-0602 | 715 |
| 239-1080 | 704 |
| | 706 |
| | ►781 |
| 239-1081 | 703 |
| | 705 |
| | 711 |
| | ►782 |
| 239-1434 | 86 |
| 239-1435 | 86 |
| 239-2270 | 77 |
| 239-3683 | 51 |
| 239-5761 | ►80 |
| | 82 |
| 239-5763 | 80 |
| | 82 |
| 239-5766 | 80 |
| | 82 |
| 239-6989 | 807 |
| 239-6996 | ►79 |
| | 705 |
| | 706 |
| 239-9400 | ►348 |
| 239-9403 | ►348 |
| 239-9404 | ►348 |
| 239-9405 | ►348 |
| 239-9410 | ►397 |
| 239-9413 | ►349 |
| 239-9427 | 807 |
| 239-9430 | 807 |
| 239-9434 | 808 |
| 239-9435 | 594 |
| | 806 |
| 239-9436 | 808 |
| 239-9438 | 806 |
| 239-9897 | 22 |
| | 23 |
| 240-0017 | 315 |
| 240-0018 | 314 |
| 240-0019 | 313 |
| 240-0541 | 198 |
| 240-0542 | 198 |
| 240-2568 | 79 |
| 240-2569 | 78 |
| 240-2614 | 716 |
| 240-3181 | ►542 |
| 240-3182 | ►542 |
| 240-3183 | ►543 |
| 240-3184 | ►542 |
| 240-3185 | ►543 |
| 240-3186 | ►543 |
| 240-3478 | 336 |
| | ►338 |
| 240-3479 | 338 |
| 240-4639 | 110 |
| 240-5571 | 96 |
| 240-7095 | 807 |
| 240-7194 | 33 |
| 240-7957 | 807 |
| 240-8490 | ►1 |
| 240-8491 | ►1 |
| 240-8492 | ►2 |
| 240-8493 | ►2 |
| 240-8504 | ►3 |
| 240-8505 | ►3 |
| 240-8506 | ►4 |
| 240-8507 | ►4 |
| 240-8683 | ►9 |
| 240-8684 | ►9 |
| 240-8685 | ►10 |
| 240-8686 | ►10 |
| 240-8687 | ►11 |
| 240-8688 | ►11 |
| 240-8689 | ►5 |
| 240-8690 | ►5 |
| 240-8691 | ►6 |
| 240-8692 | ►6 |
| 240-8693 | ►12 |
| 240-8694 | ►12 |
| 240-8695 | ►13 |
| 240-8696 | ►13 |
| 240-8697 | ►14 |
| 240-8698 | ►14 |
| 240-8699 | ►7 |
| 240-8700 | ►7 |
| 240-8701 | ►8 |
| 240-8702 | ►8 |
| 240-9671 | 539 |
| 240-9716 | 539 |
| 240-9721 | 539 |
| 240-9756 | 88 |
| 241-0022 | 90 |
| 241-0093 | 140 |
| | 142 |
| 241-0095 | ►140 |
| 241-0096 | ►142 |
| 241-0168 | ►345 |
| 241-3406 | 15 |
| | ►336 |
| 241-4275 | 90 |
| 242-1529 | ►81 |
| 242-1920 | 73 |
| 242-8521 | 15 |
| | ►198 |
| 242-9751 | 57 |
| 242-9947 | ►82 |
| 243-5027 | 189 |
| 244-1989 | 588 |
| 244-2104 | 715 |
| 244-2603 | 101 |
| | ►102 |
| 244-3106 | 189 |
| 244-3316 | 113 |
| 244-6869 | 385 |
| 245-1728 | 487 |
| 245-9828 | 35 |
| 246-1163 | 25 |
| 246-2582 | 22 |
| | 23 |
| | ►25 |


► PRIMARY REFERENCE

CATERPILLAR®

© 2003 Caterpillar
All Rights Reserved

Printed in U.S.A.