Transmission

F

F 1 MANUAL TRANSMISSION

F 2 T/C TRANSMISSION

F 3 TORQUE CONVERTER

F 4 FINAL DRIVE

MANUAL TRANSMISSION

F1

Description	3C Page	3C up to m/c no.	3D Page	3D up to m/c no.
Clutch Cover	F 1–3–1		F 1–3–1	
Clutch Plate	F 1–4–1		F 1–4–1	
Crown Wheel & Pinion	F 1–8–1		F 1–8–1	
Flywheel & Housing	F 1–2–1		F 1–2–1	
Half Shaft & Housing (STD)	See Sec. F4		See Sec. F4	
Half Shaft & Housing (with Wheel Brakes)	See Sec. F4		See Sec. F4	
Gearbox Cover	F 1–6–1		F 1–6–1	
Gearbox Casing	F 1–5–1		F 1–5–1	
Layshaft	F 1–9–1		F 1–9–1	
Mainframe–Engine	F 1–1–1		F 1–1–1	
Primary Shaft	F 1–7–1		F 1–7–1	
Wheels & Tyres	See Sec. F4		See Sec. F4	

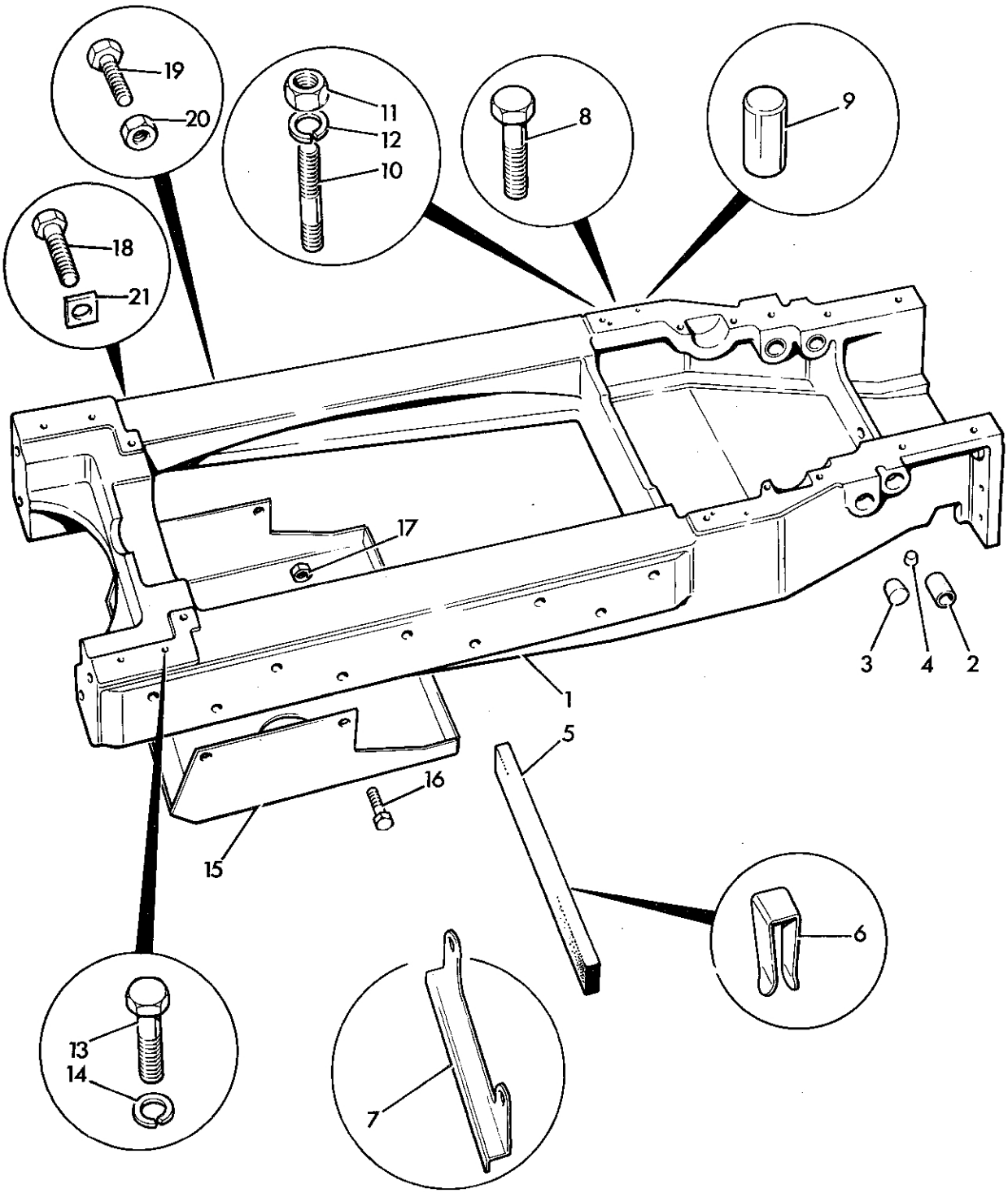

4673

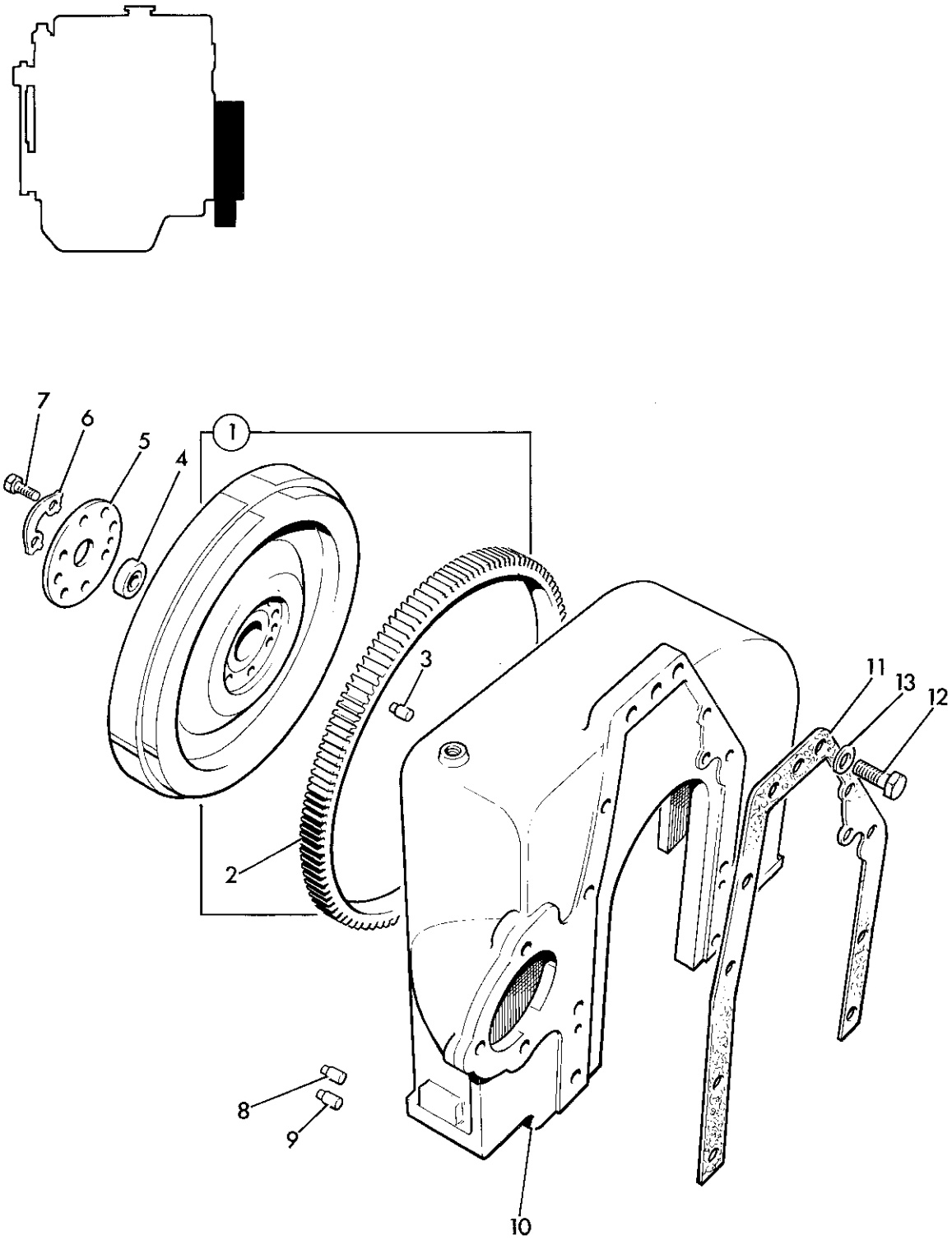

4674

F 1–3–1

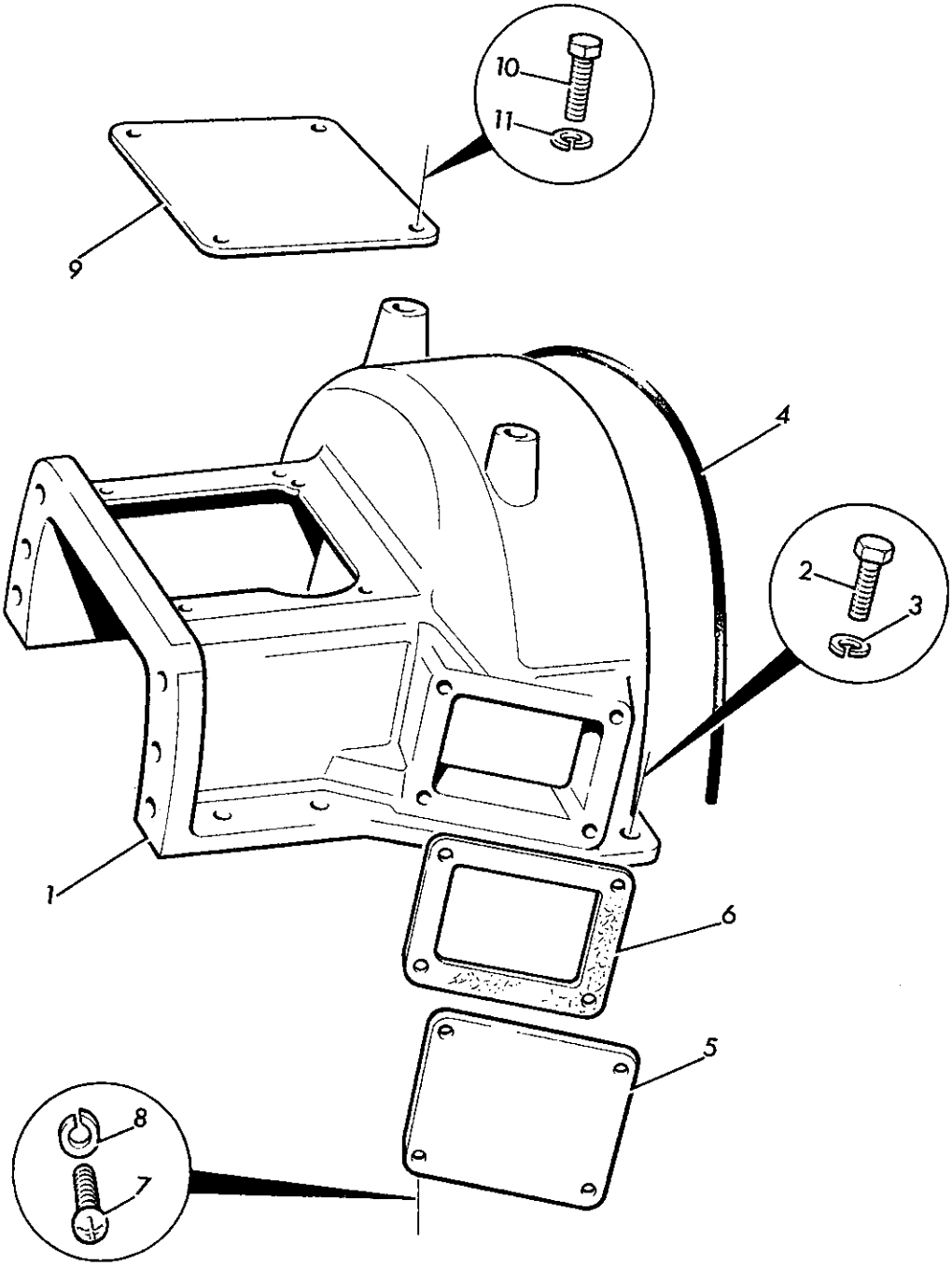

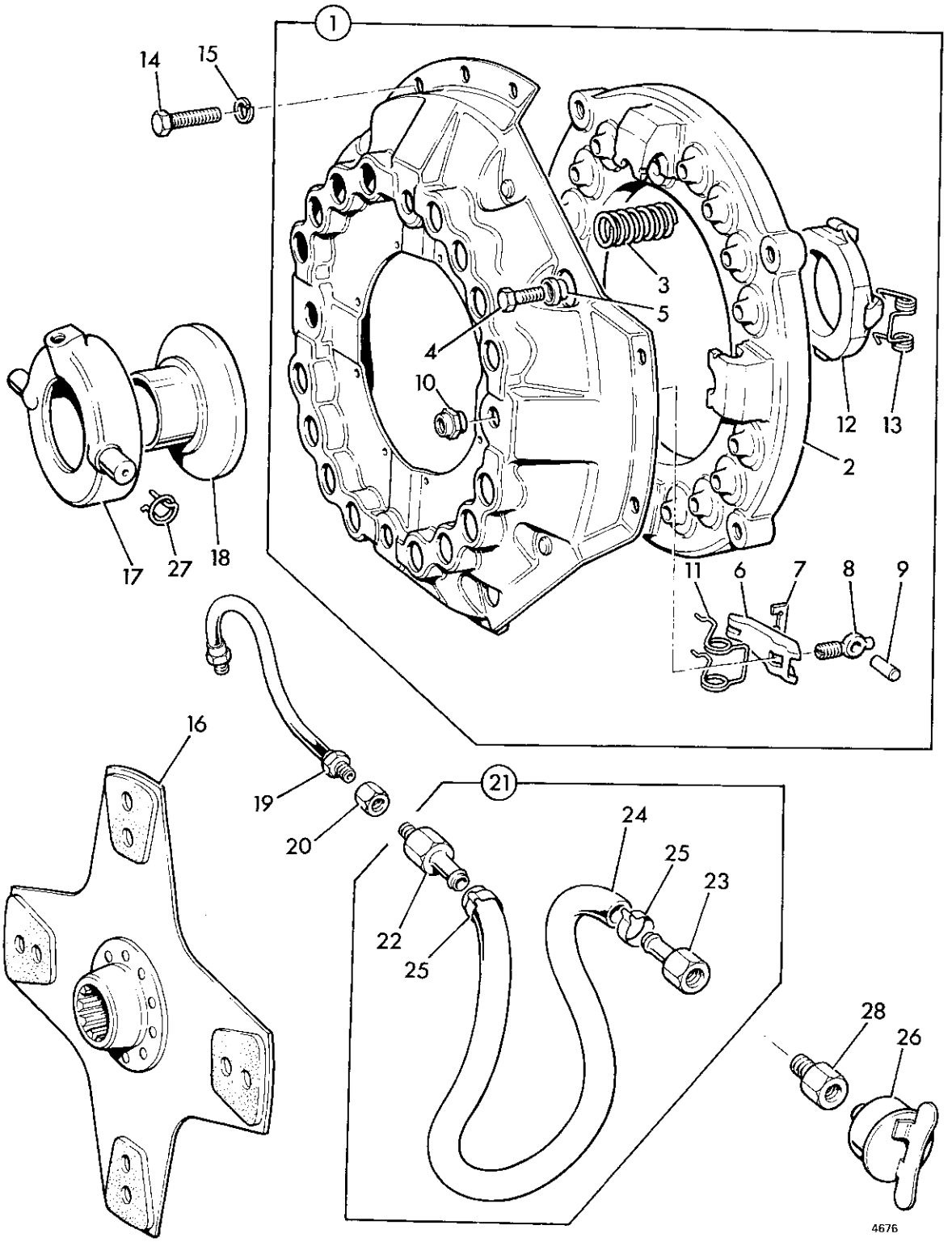
1
14
15
3
5
4
10
12
13
2
17
27
18
11
6
7
8
9
16
19
20
21
24
25
23
22
25
28
26
4676

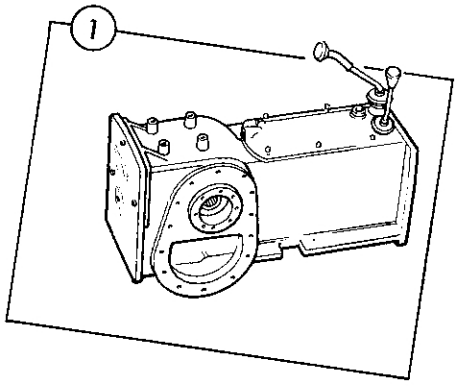
1

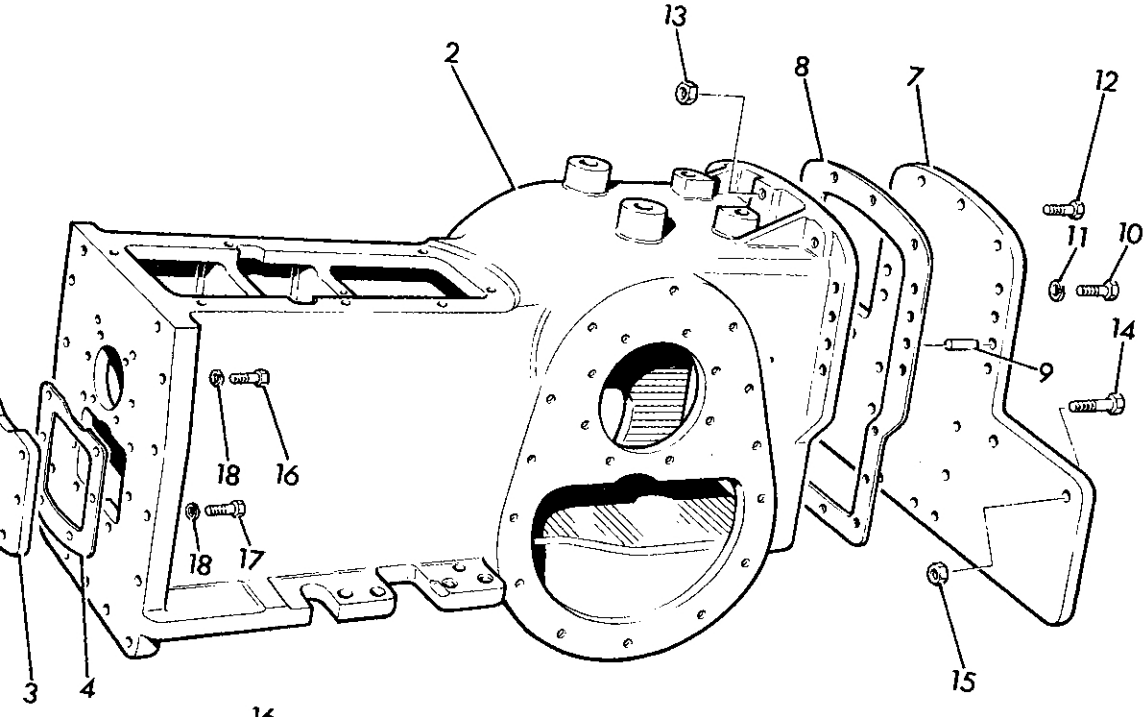
13
2
8
7
12
11
10
14
9
18
16
18
17
3
4
15

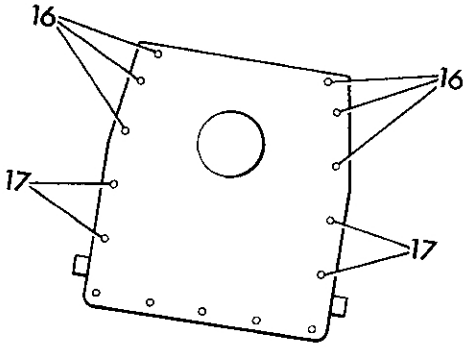
16
16
17
17

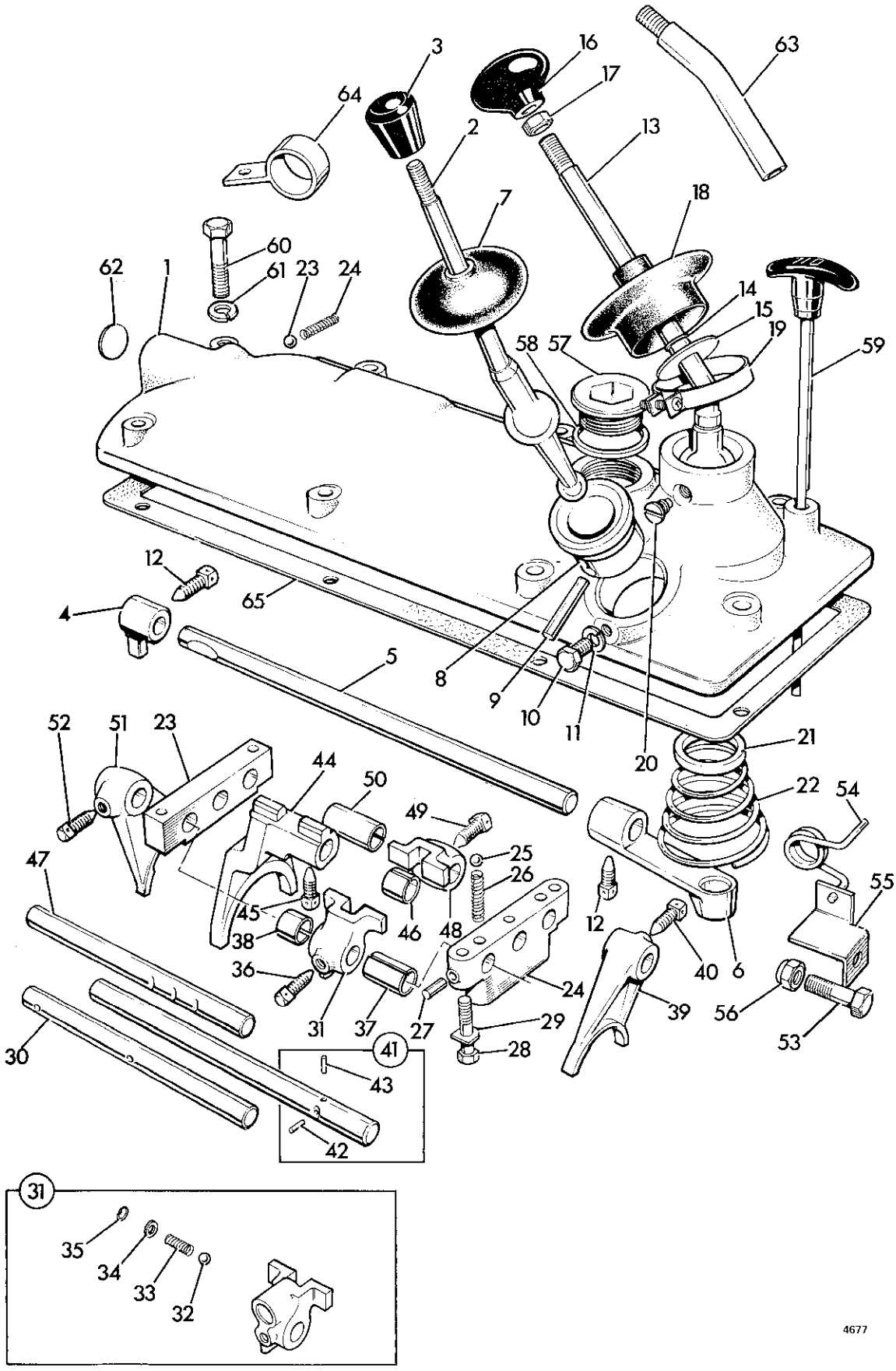
3
16
63
17
64
2
13
7
18
60
62
1
61
23
24
14
15
19
58
57
59
12
65
4
5
8
9
10
11
20
21
52
51
23
44
50
22
54
49
25
26
47
45
46
48
12
55
38
36
24
40
6
39
56
31
37
27
29
53
30
41
28
43
42
31
35
34
33
32

4677

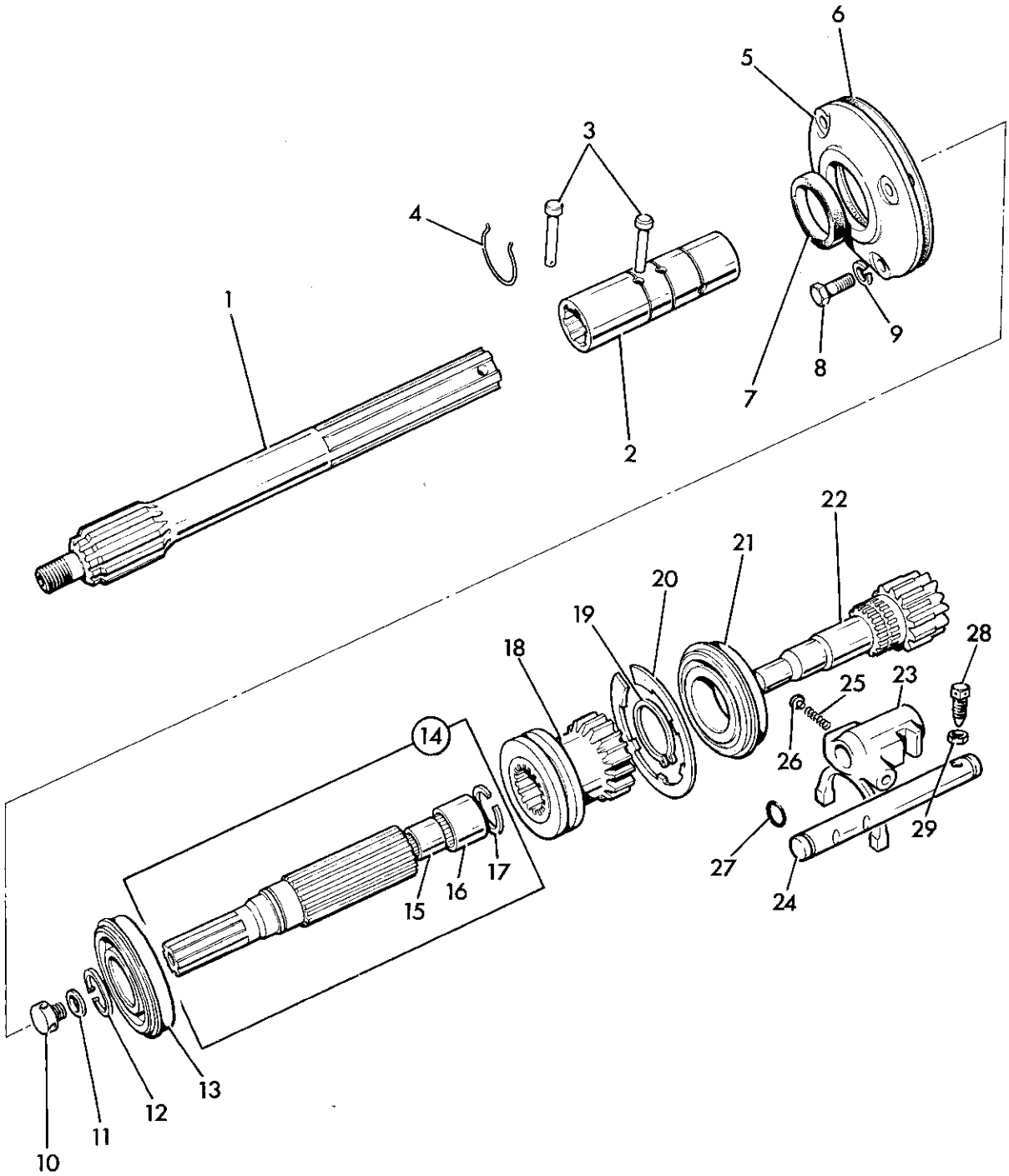
1
2
3
4
5
6
7
8
9
10
11
12
13
14
15
16
17
18
19
20
21
22
23
24
25
26
27
28
29
4678

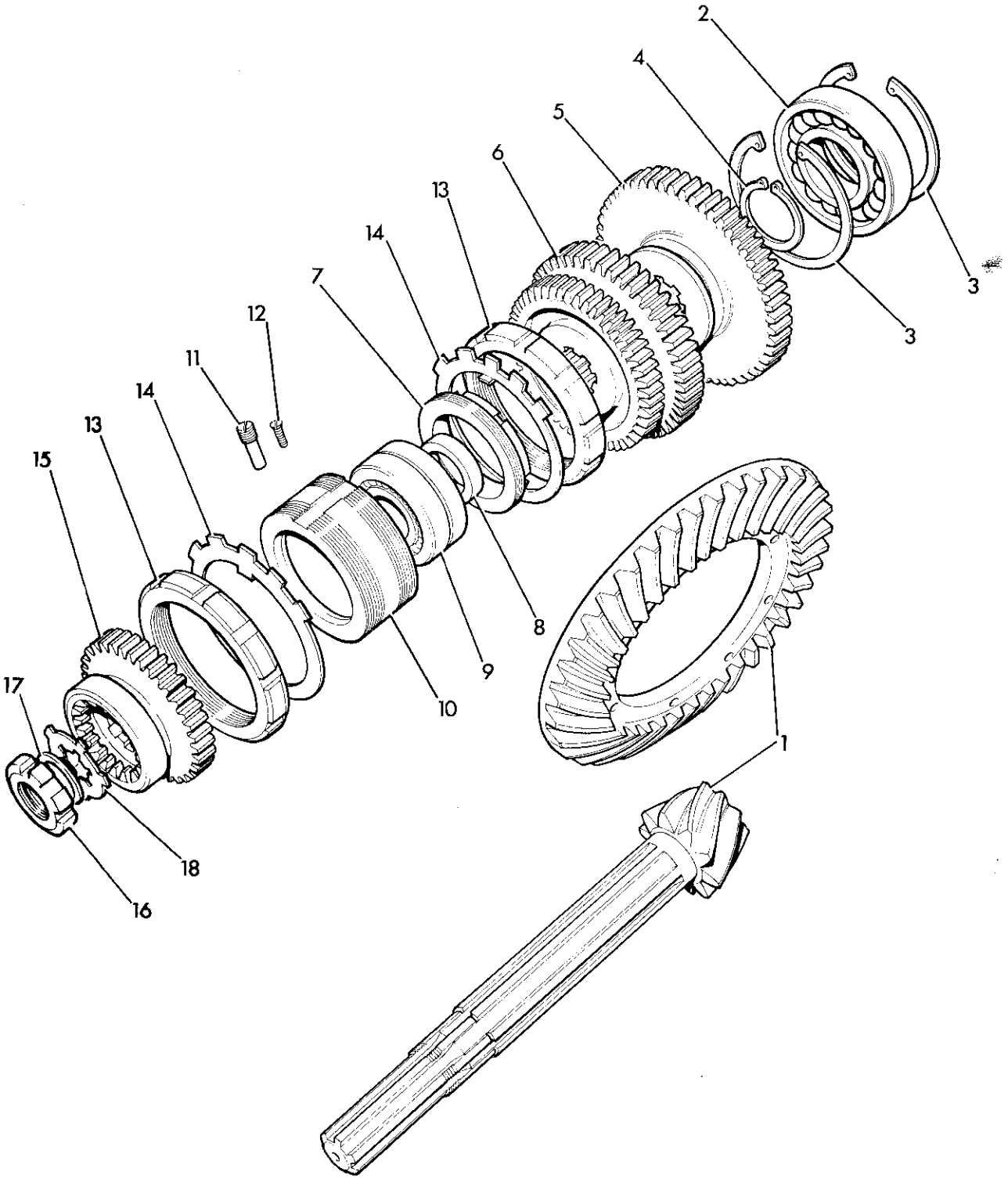

4679

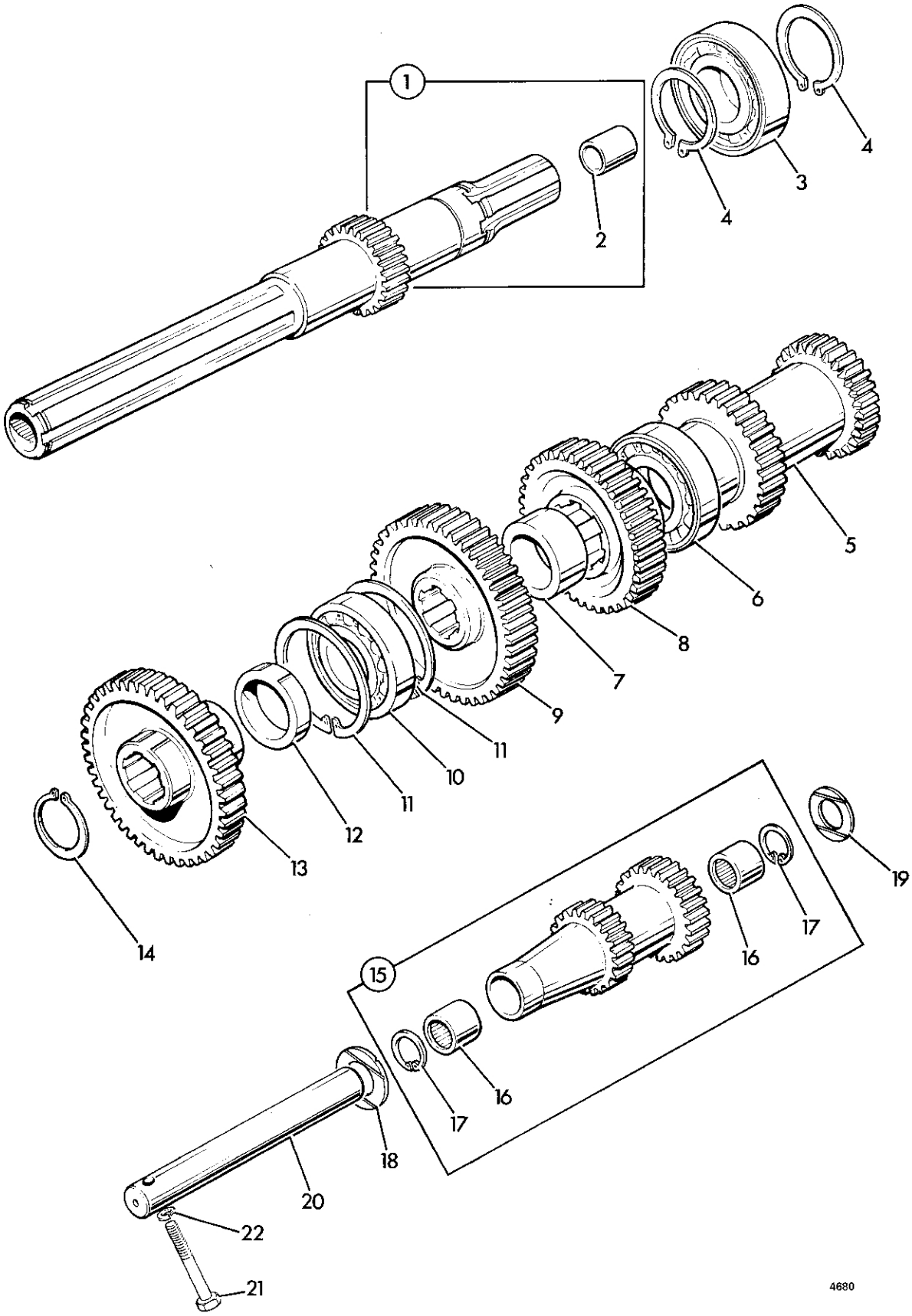
1
2
3
4
4
5
6
7
8
9
10
11
11
12
13
14
15
16
16
17
17
18
19
20
21
22
4680

T/C TRANSMISSION

F2

Description	3C Page	3C up to m/c no.	3D Page	3D up to m/c no.
Crown Wheel & Pinion	F 2–4–1		F 2–4–1	
Differential	See Sec. F4		See Sec. F4	
Flywheel & Mounting	F 2–1–1		F 2–1–1	
Gearbox Cover	F 2–3–1		F 2–3–1	
Gearbox Casing	F 2–2–1		F 2–2–1	
Half Shaft & Housing (STD)	See Sec. F4		See Sec. F4	
Half Shaft & Housing (with Wheel Brakes	See Sec. F4		See Sec. F4	
Layshaft	F 2–5–1		F 2–5–1	
Torque Converter	See Sec. F3		See Sec. F3	
Wheels & Tyres	See Sec. F4		See Sec. F4	

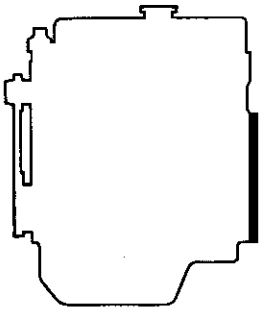

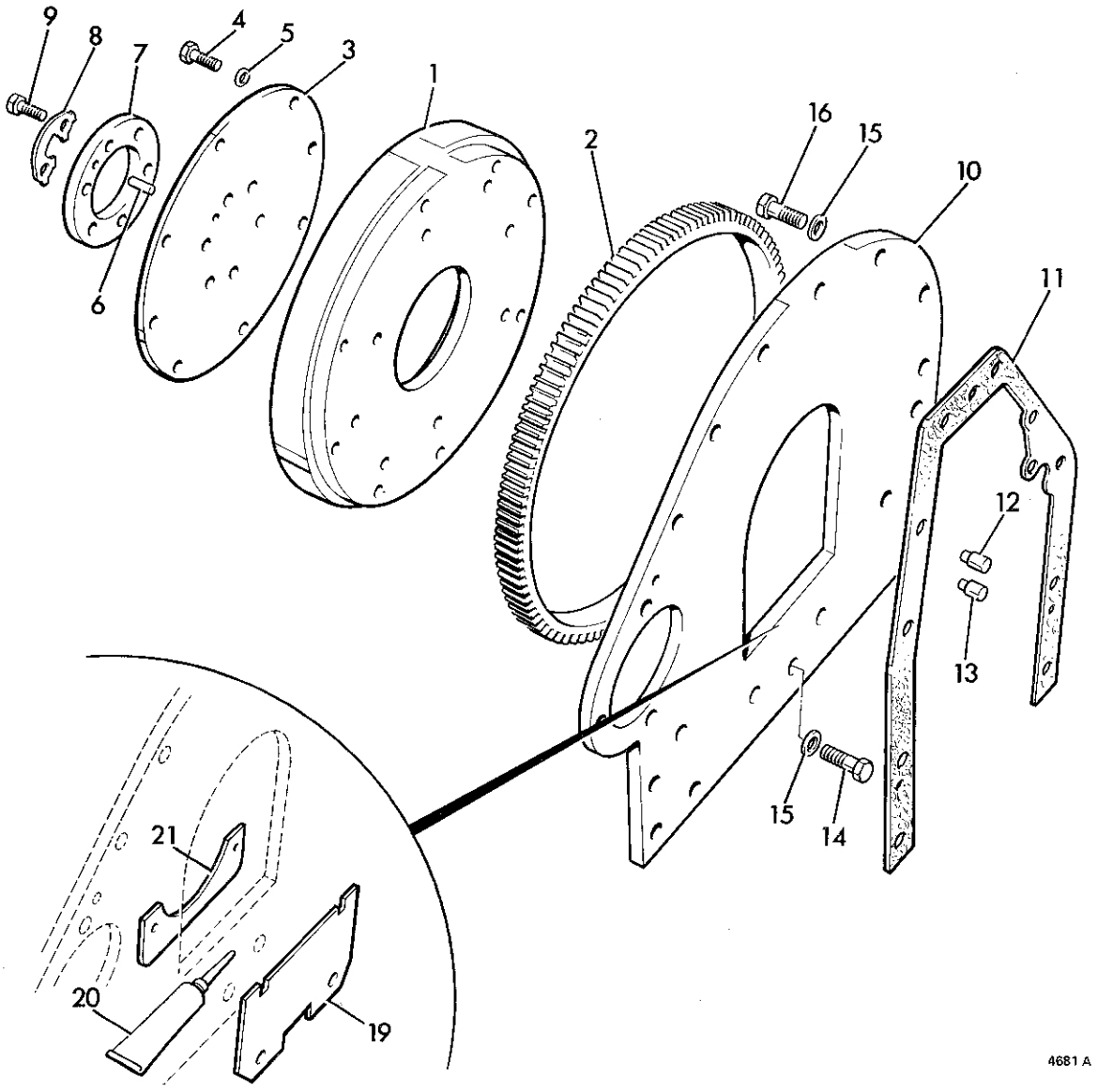
9
8
7
4
5
3
1
2
16
15
10
11
6
12
13
15
14
21
20
19
4681 A

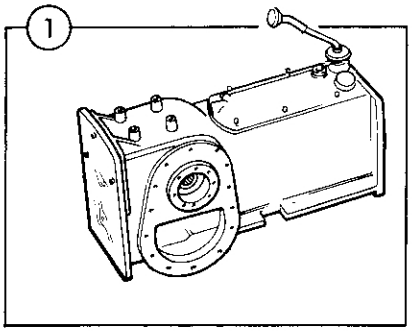

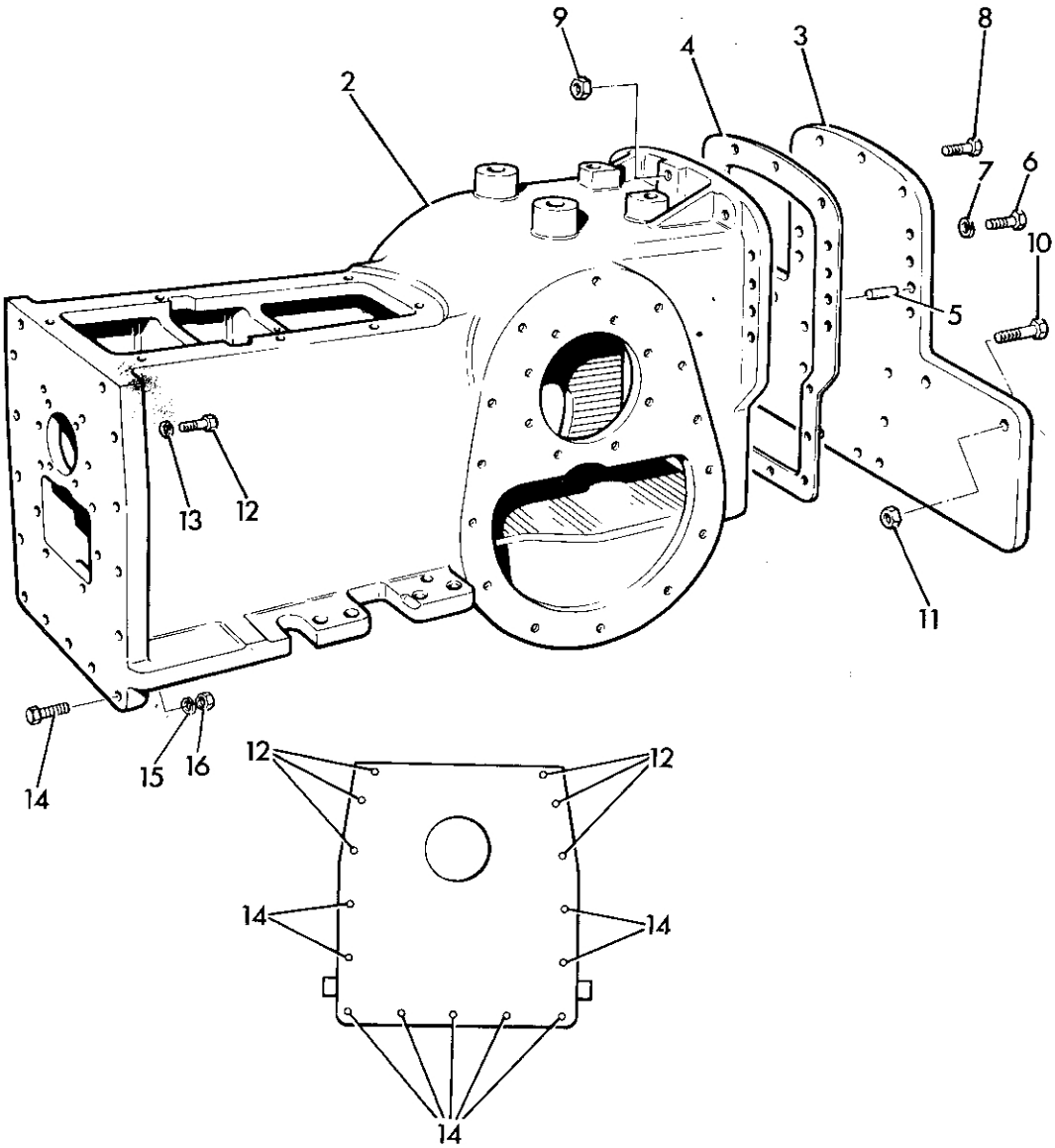

4942

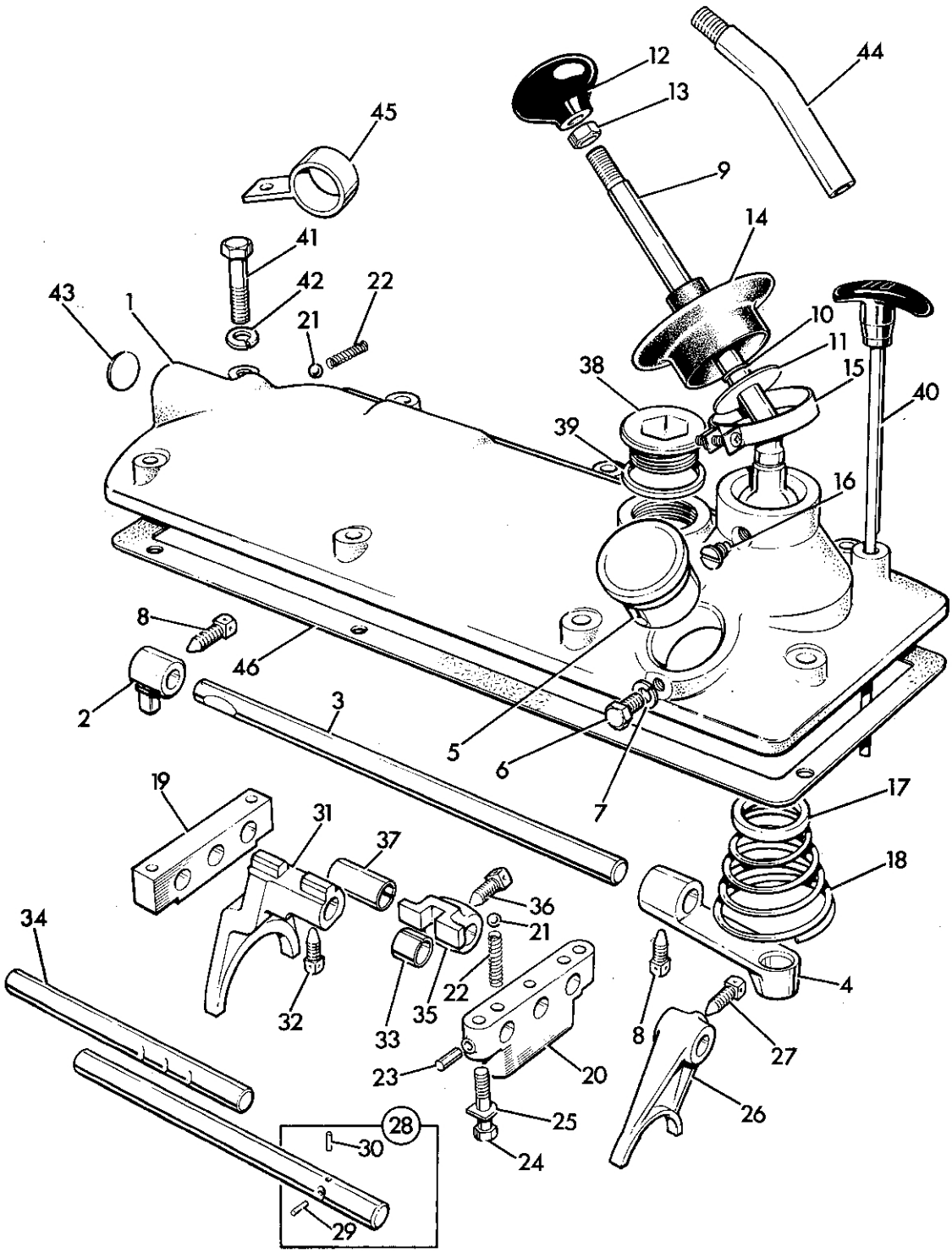
12
13
44
45
9
14
41
42
22
43
1
21
10
11
38
15
40
39
16
8
46
2
3
5
6
7
17
19
31
37
18
36
34
21
22
4
32
33
35
8
27
23
20
26
25
28
30
24
29

4682

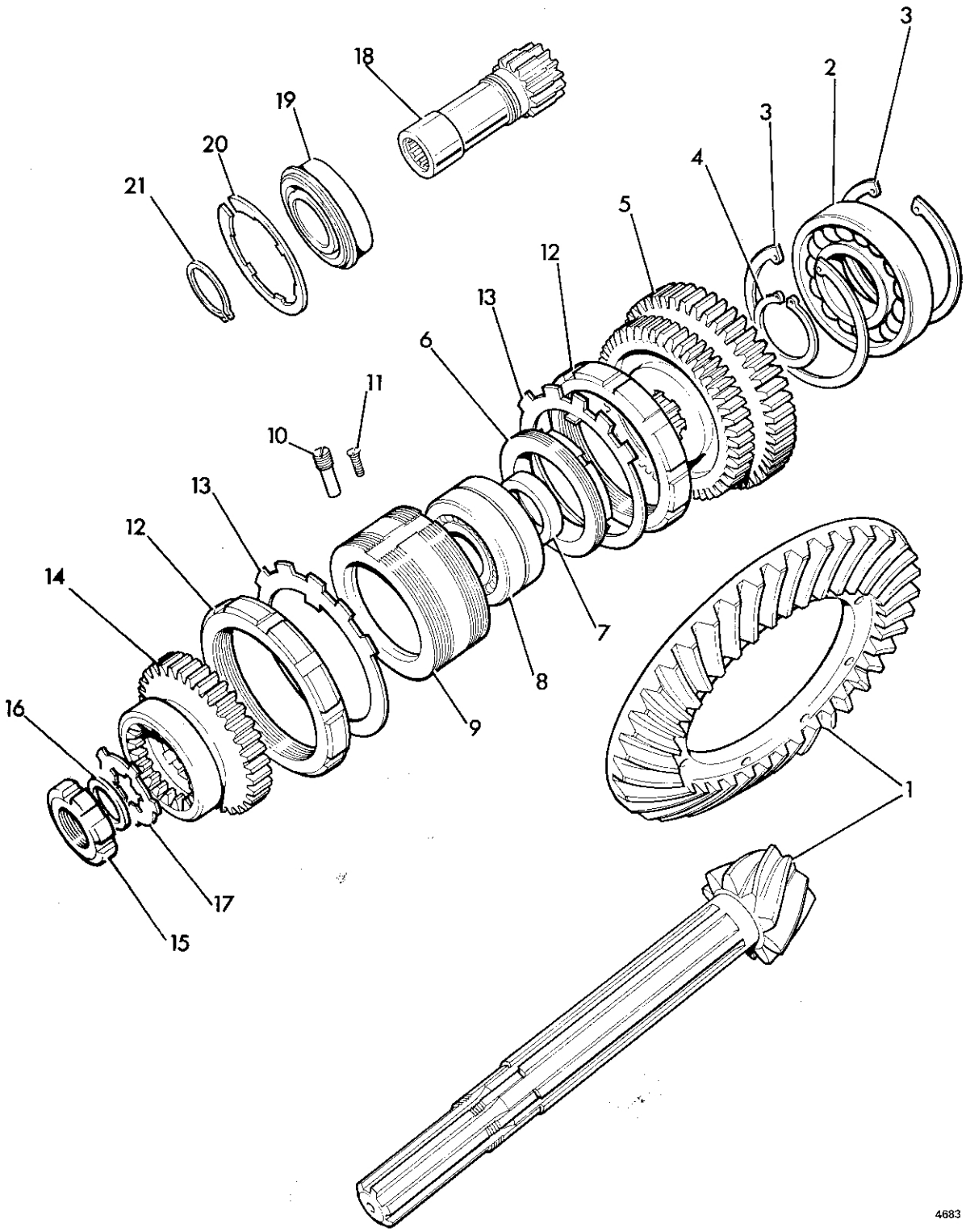
3
2
3
4
5
12
13
6
11
10
13
12
14
16
17
15
9
8
7
1
18
19
20
21
4683

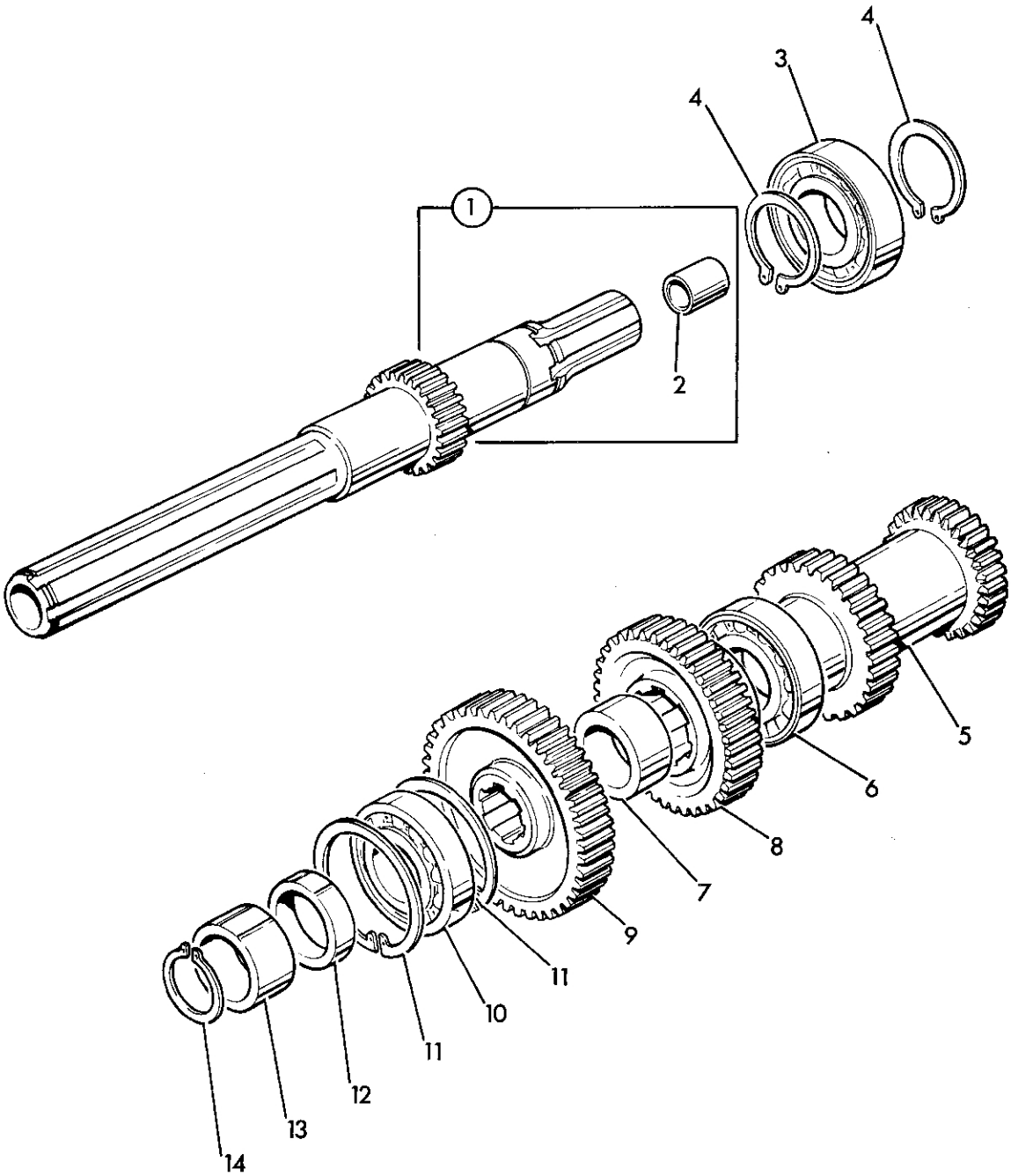
1
2
3
4
4
5
6
7
8
9
10
11
11
12
13
14
4684

TORQUE CONVERTER

F3

Description	3C Page	3C up to m/c no.	3D Page	3D up to m/c no.
Clutch	F 3–5–1		F 3–5–1	
Converter	F 3–3–1		F 3–3–1	
Filter	F 3–7–1		F 3–7–1	
Hose & Pipework	F 3–10–1 F 3–10–2	To SK1000006	F 3–10–1 F 3–10–2	To SK1000006
Impeller Assembly	F 3–3–1		F 3–3–1	
Layshaft	F 3–4–1		F 3–4–1	
Main Case	F 3–2–1		F 3–2–1	
Mainframe	F 3–11–1 F 3–11–2	To SK1000006	F 3–11–1 F 3–11–2	To SK1000006
Reaction Plate	F 3–6–1		F 3–6–1	
Valve–Directional	F 3–8–1		F 3–8–1	
Valve–Modulating	F 3–9–1		F 3–9–1	
Valve–Pressure	F 3–8–1		F 3–8–1	
Output Shaft	F 3–5–1		F 3–5–1	
Transmission	F 3–1–1		F 3–1–1	

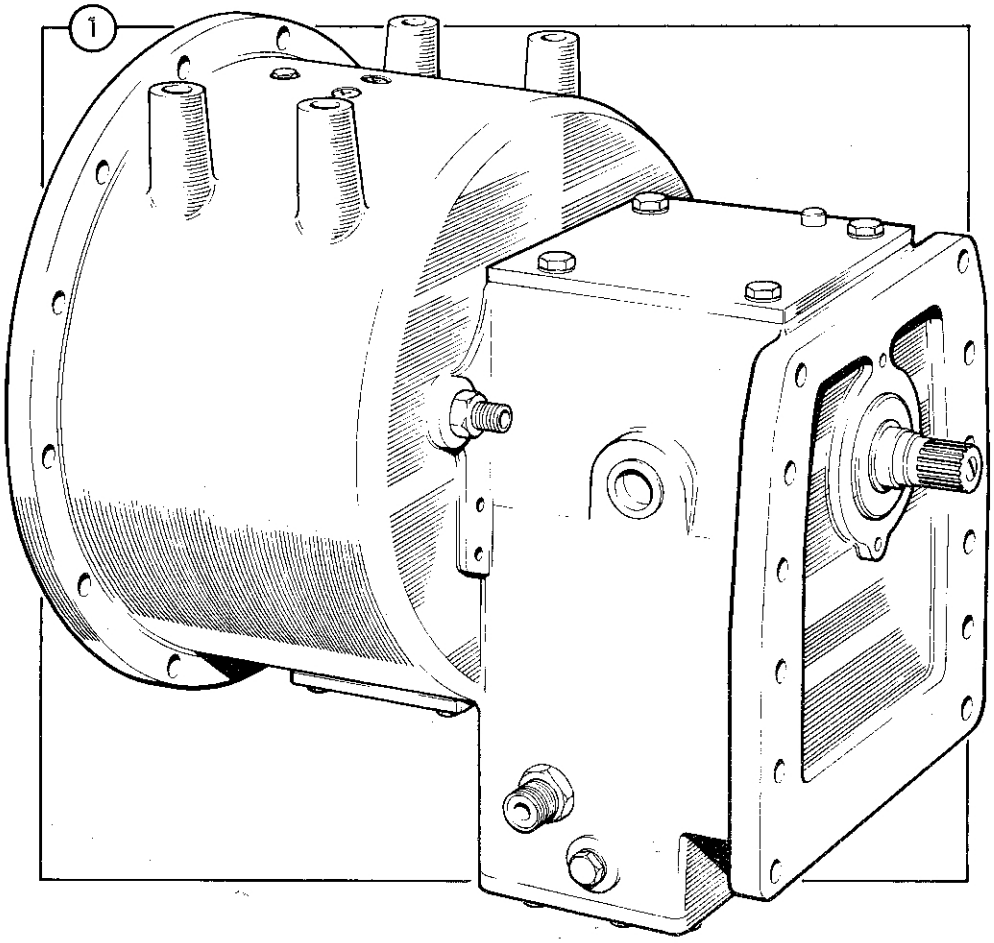

1986

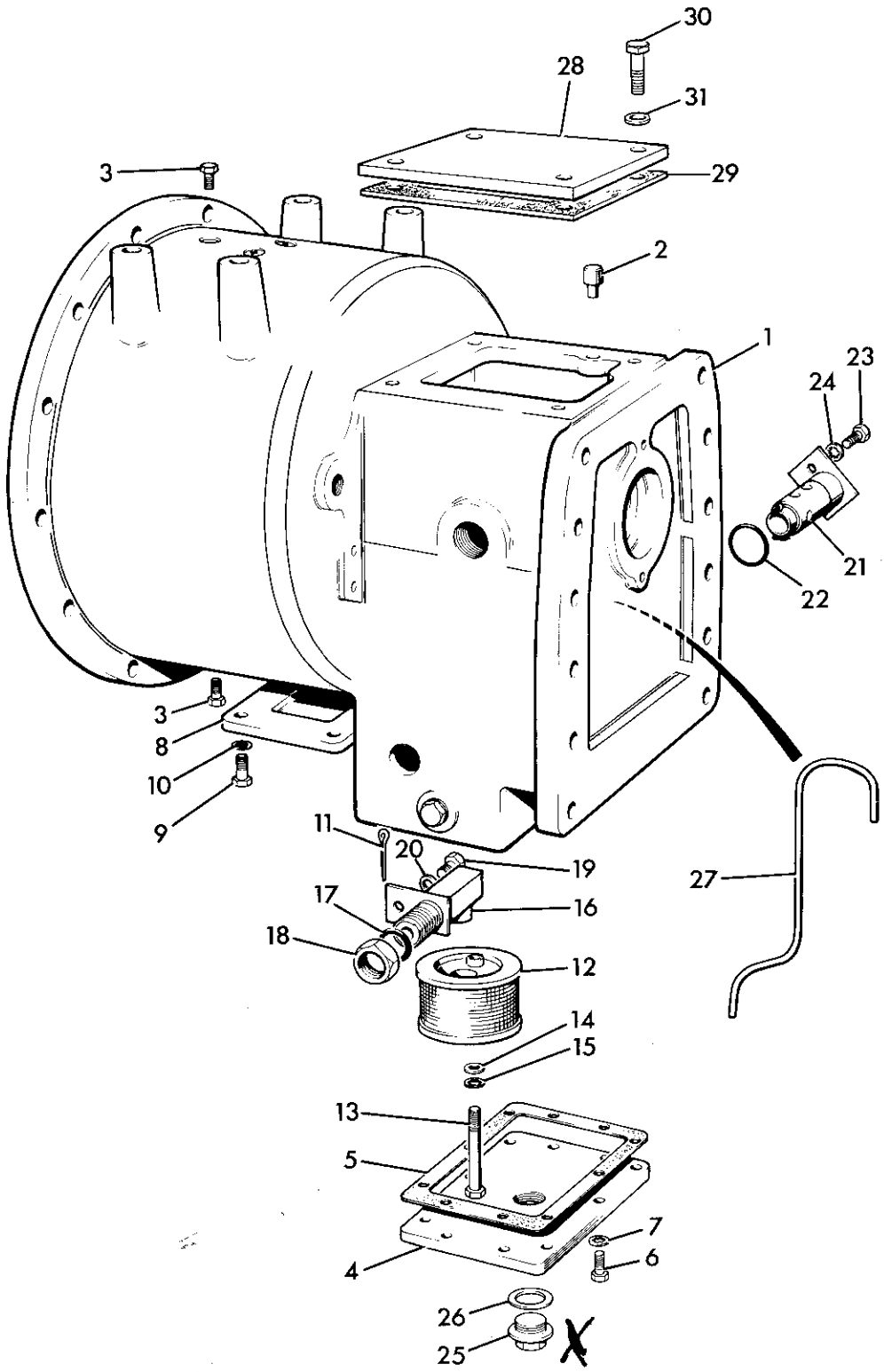
30
28
31
3
29
2
1
23
24
21
22
3
8
10
9
11
20
19
27
17
16
18
12
14
15
13
5
7
4
6
26
25
4685

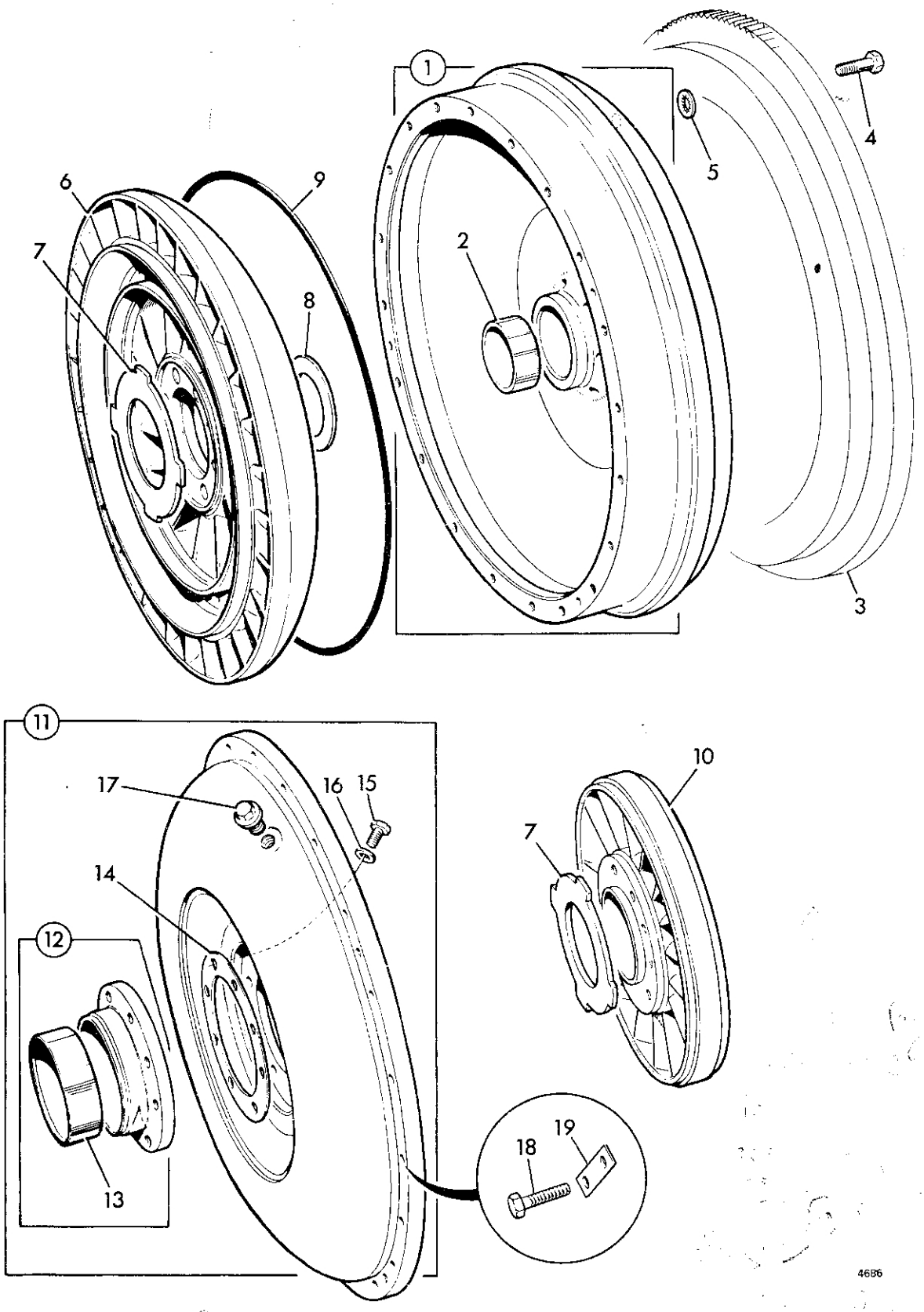
1
2
3
4
5
6
7
8
9
10
11
12
13
14
15
16
17
18
19
4686

TC 8

RAJOUTÉ
Vient de chez JCB

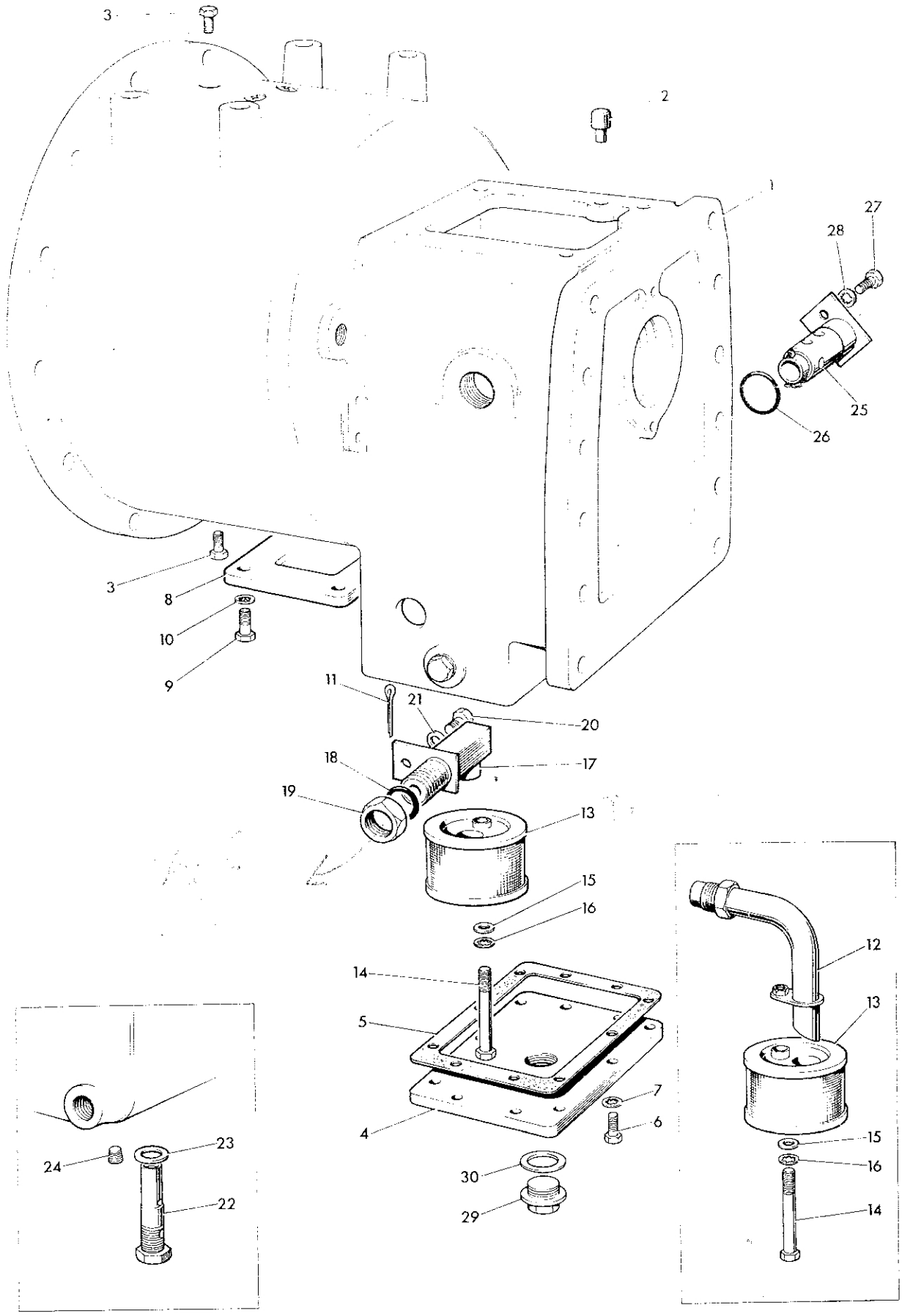

1985

RAJOUTÉ VIENT de chez JCB

TC6-1

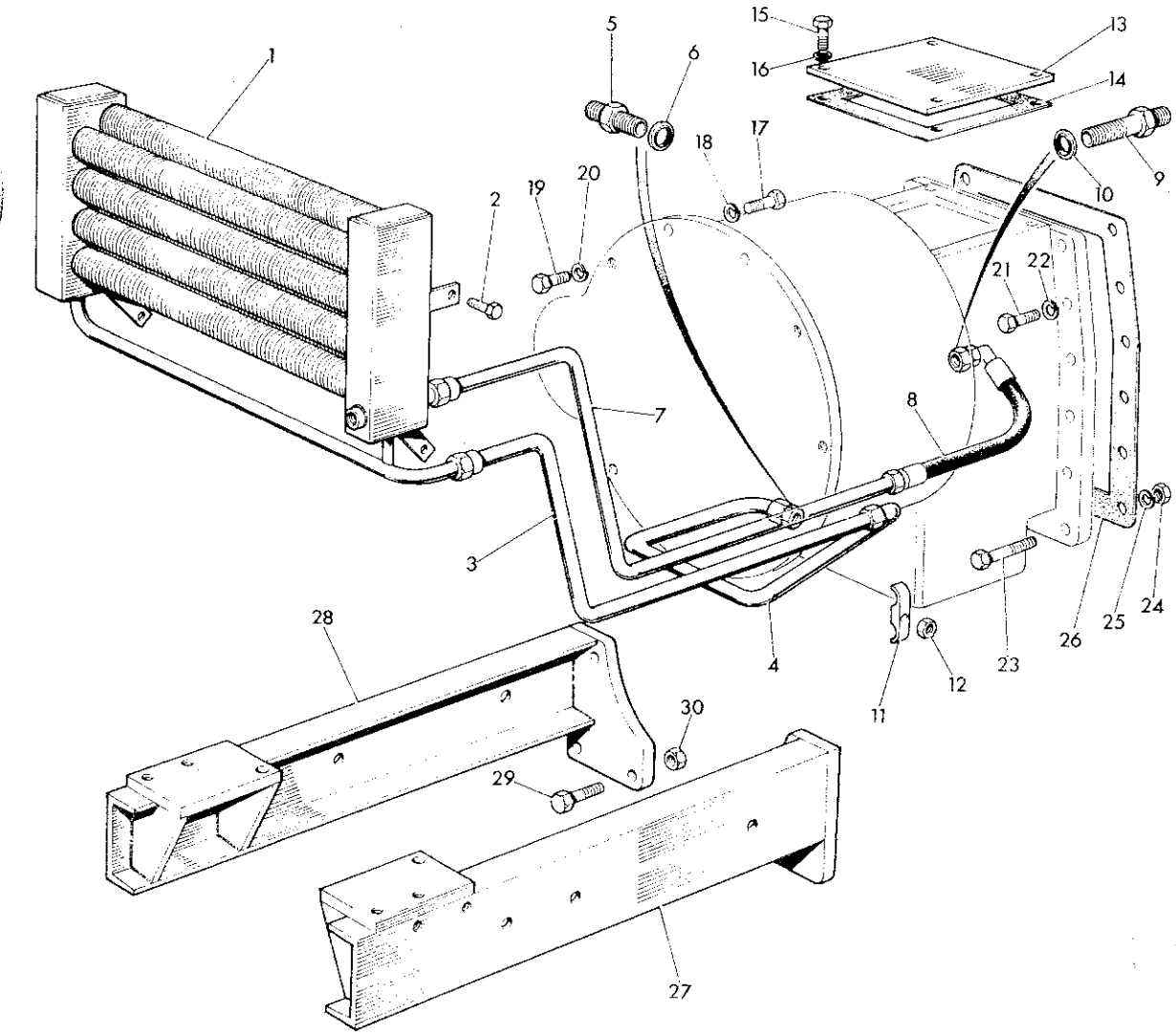

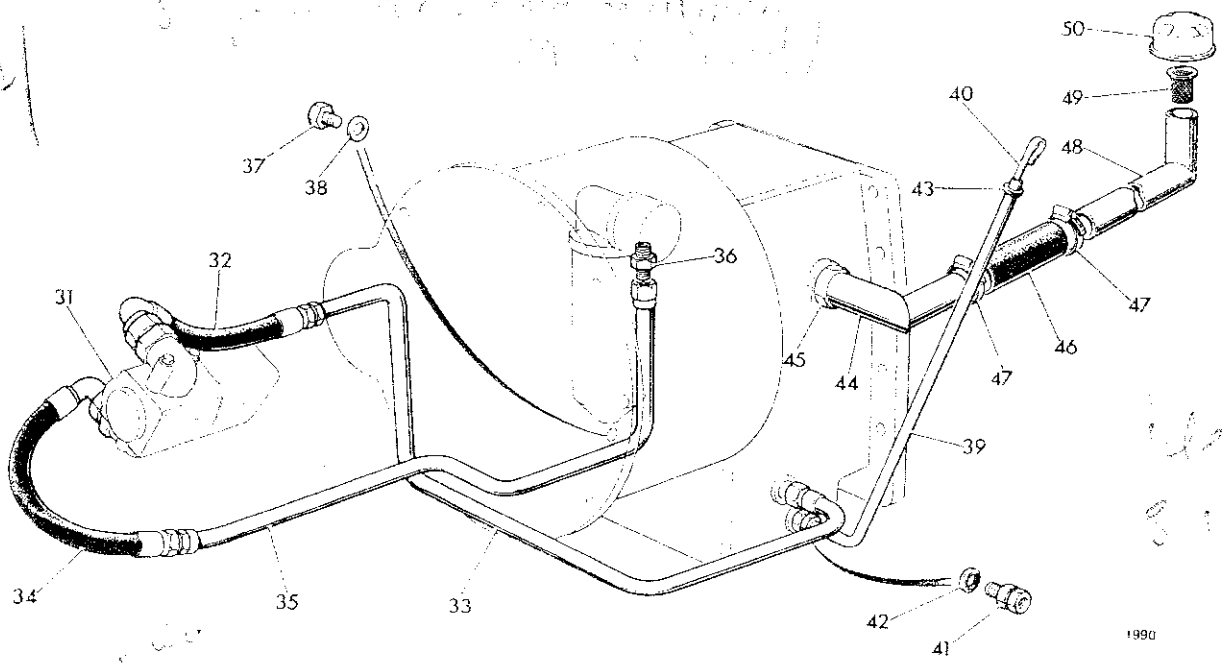

RAJOUTÉ
Vient de chg JCB
TC 1

ppe ↔ du N°
↔ du N°

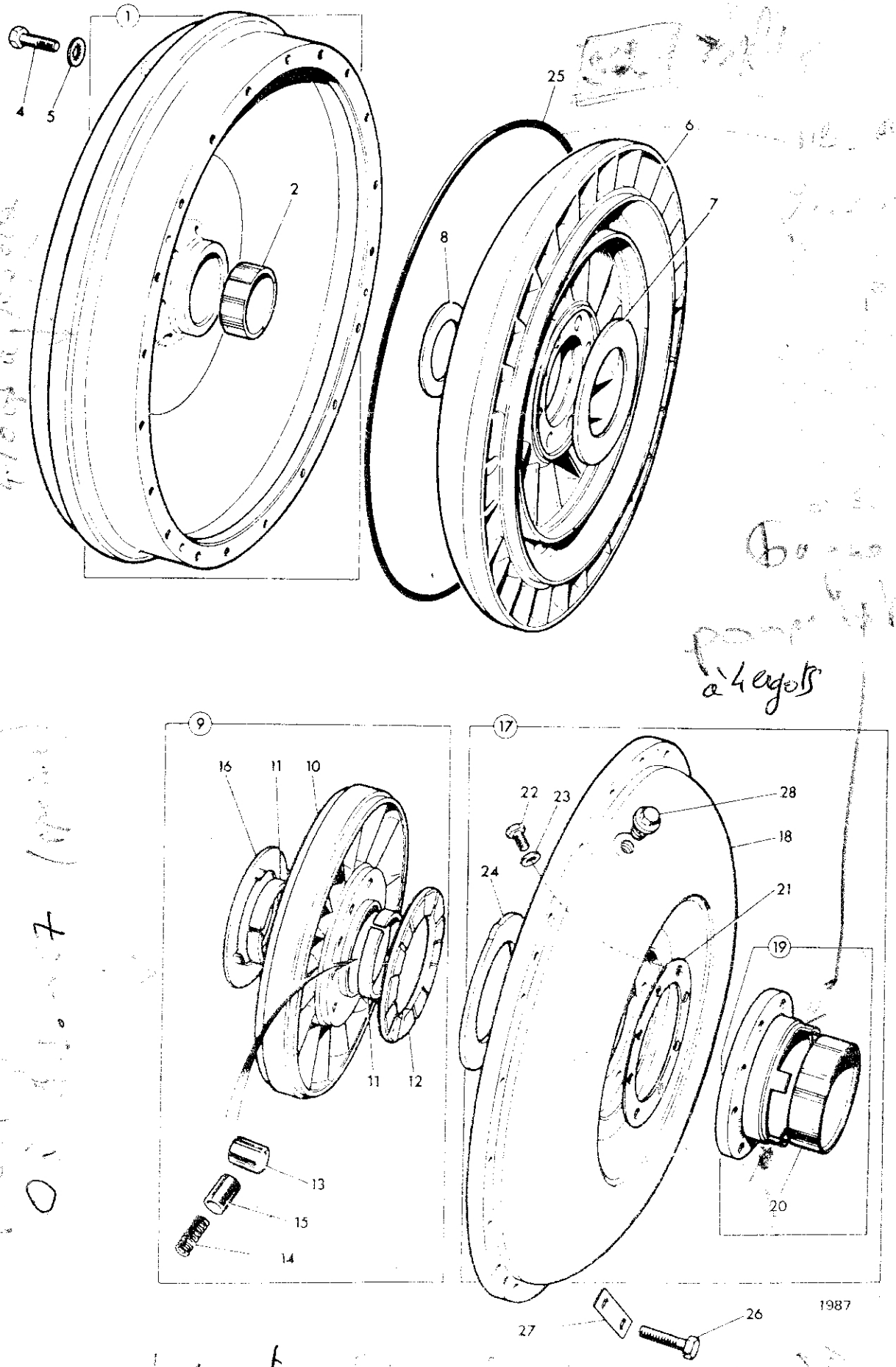

à 4 ergots

ergots

3/04/100 13:55:46 Illustration

RAJOUTÉ
vient de chg JCB

du N° 41067 à 125.000

BUILD /3

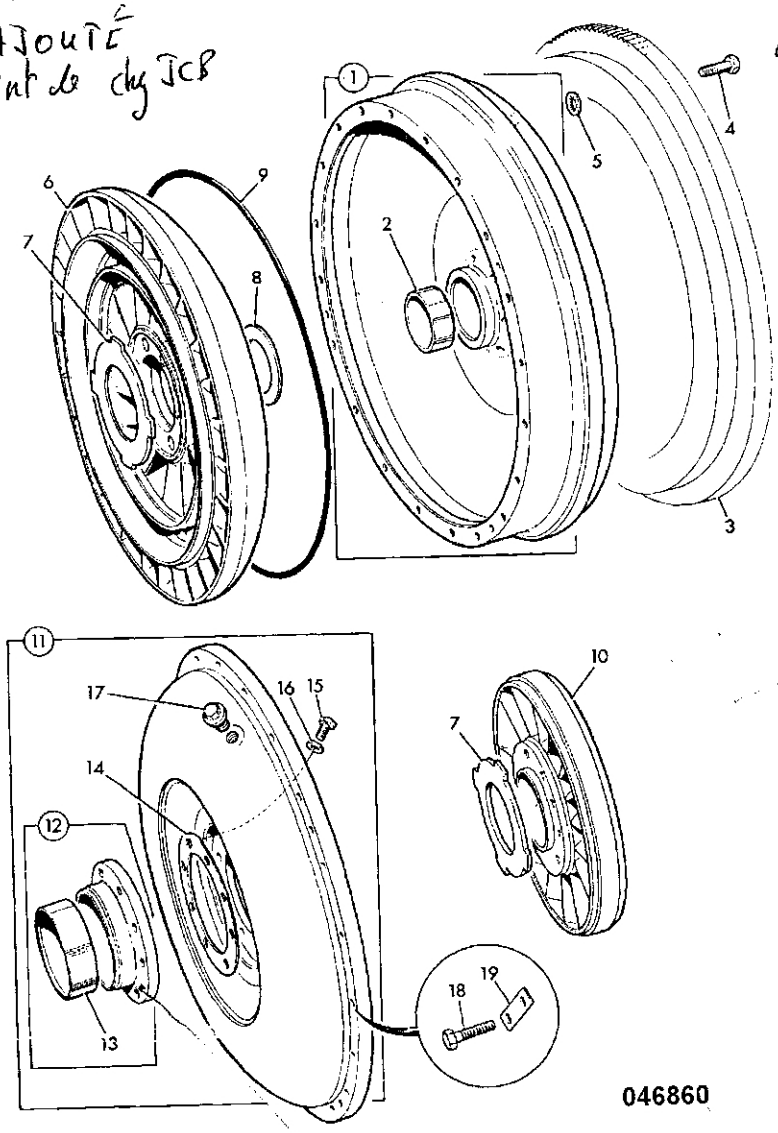

046860

avec pp int
4 ergots en plus

pour la ppe ext, la bague du 12 n'a pas d'ergots

La bague 13 est un coussinets ≃ 200 € chg JCB

j'ai fait une bague en bronze car il n'y a qu'une rotation.

TC 2 RAJOUTÉ
vient de chez JCB

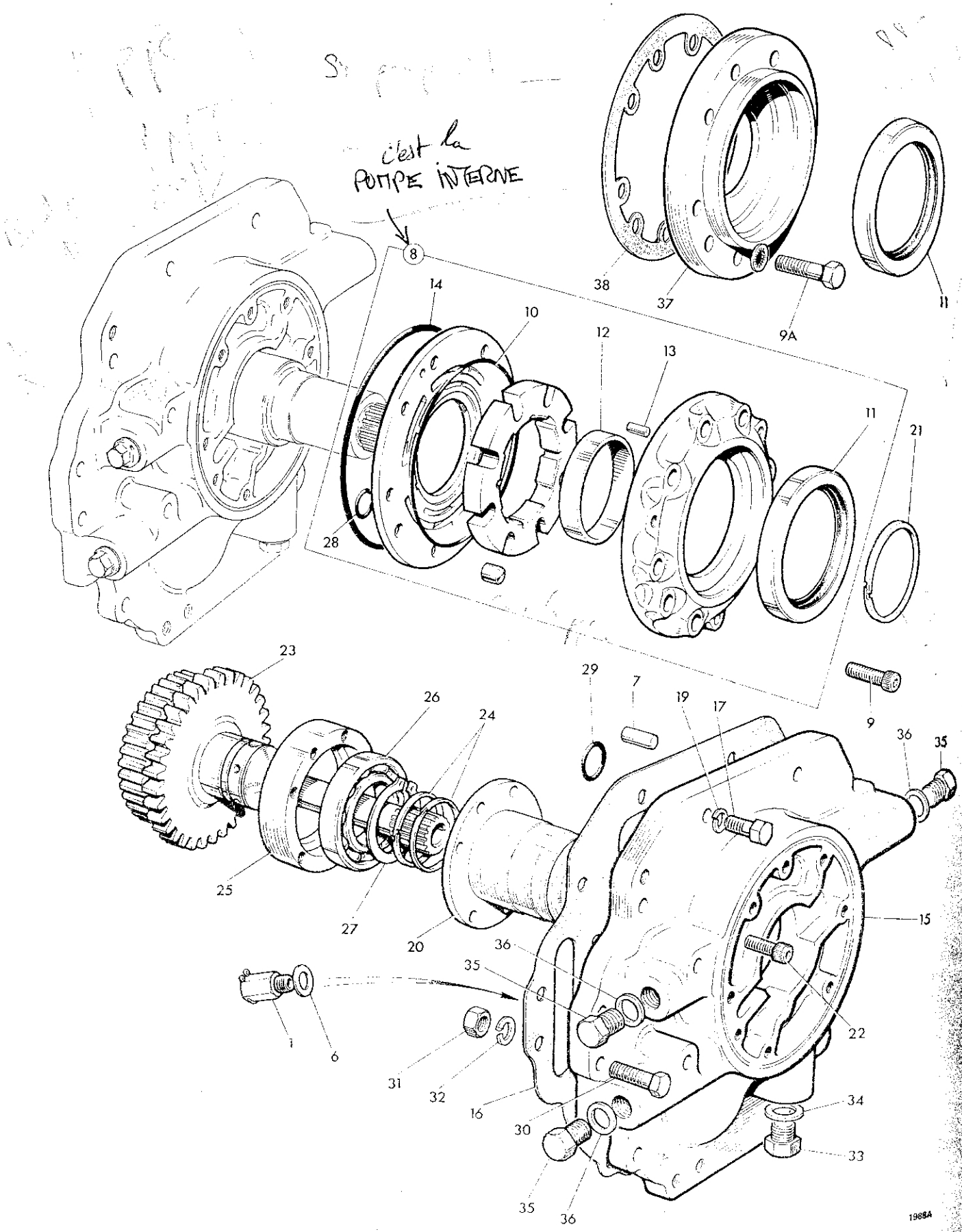

RAJOUTÉ
Vient de chez JCB

Pompe ext

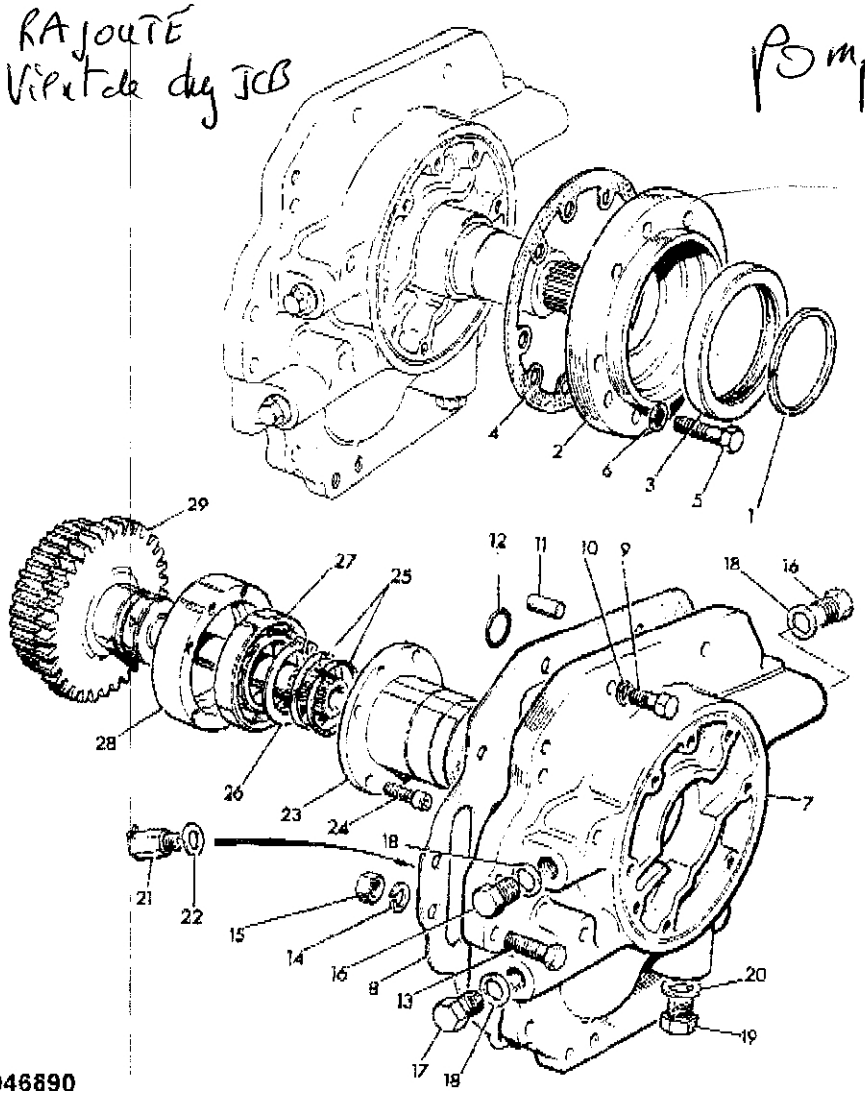

Avec ppe ext
supp int Bague
" pompe
Bague à la place de la pompe.

046890

3D
3C → 157

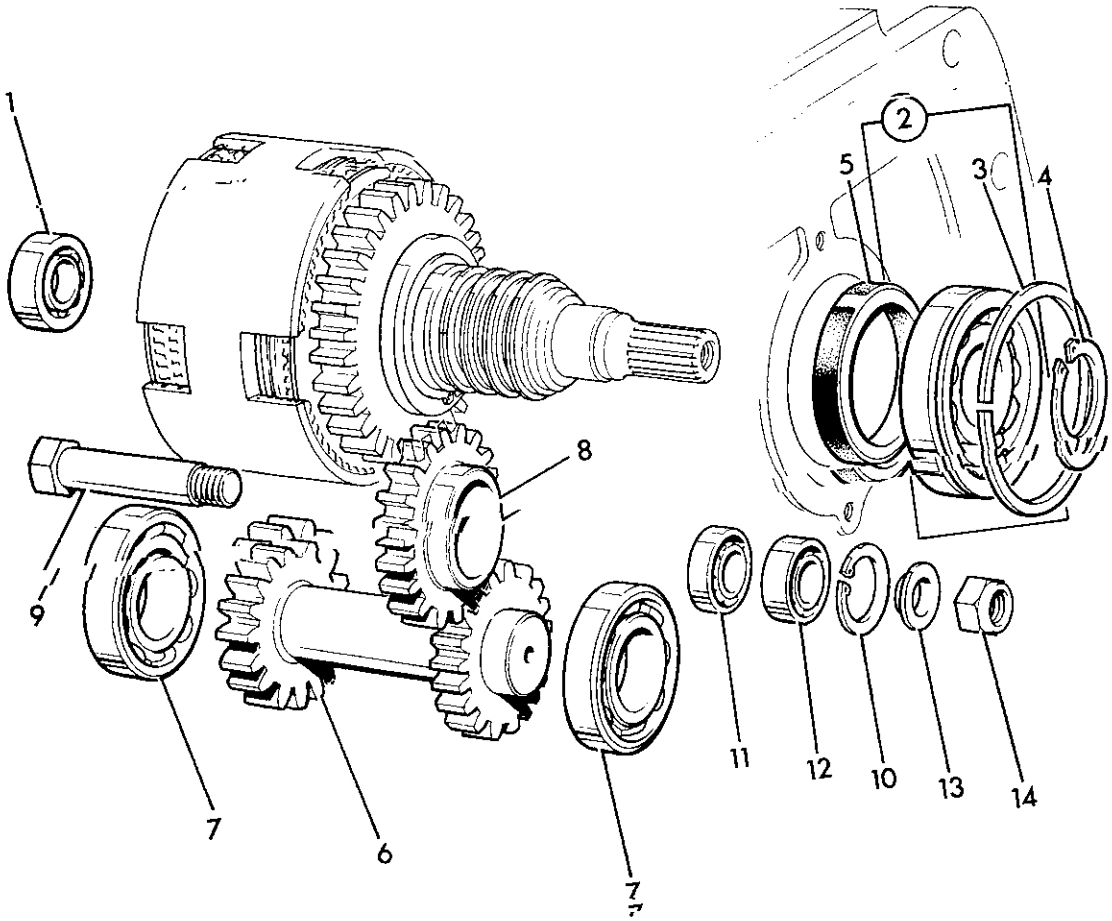

4687

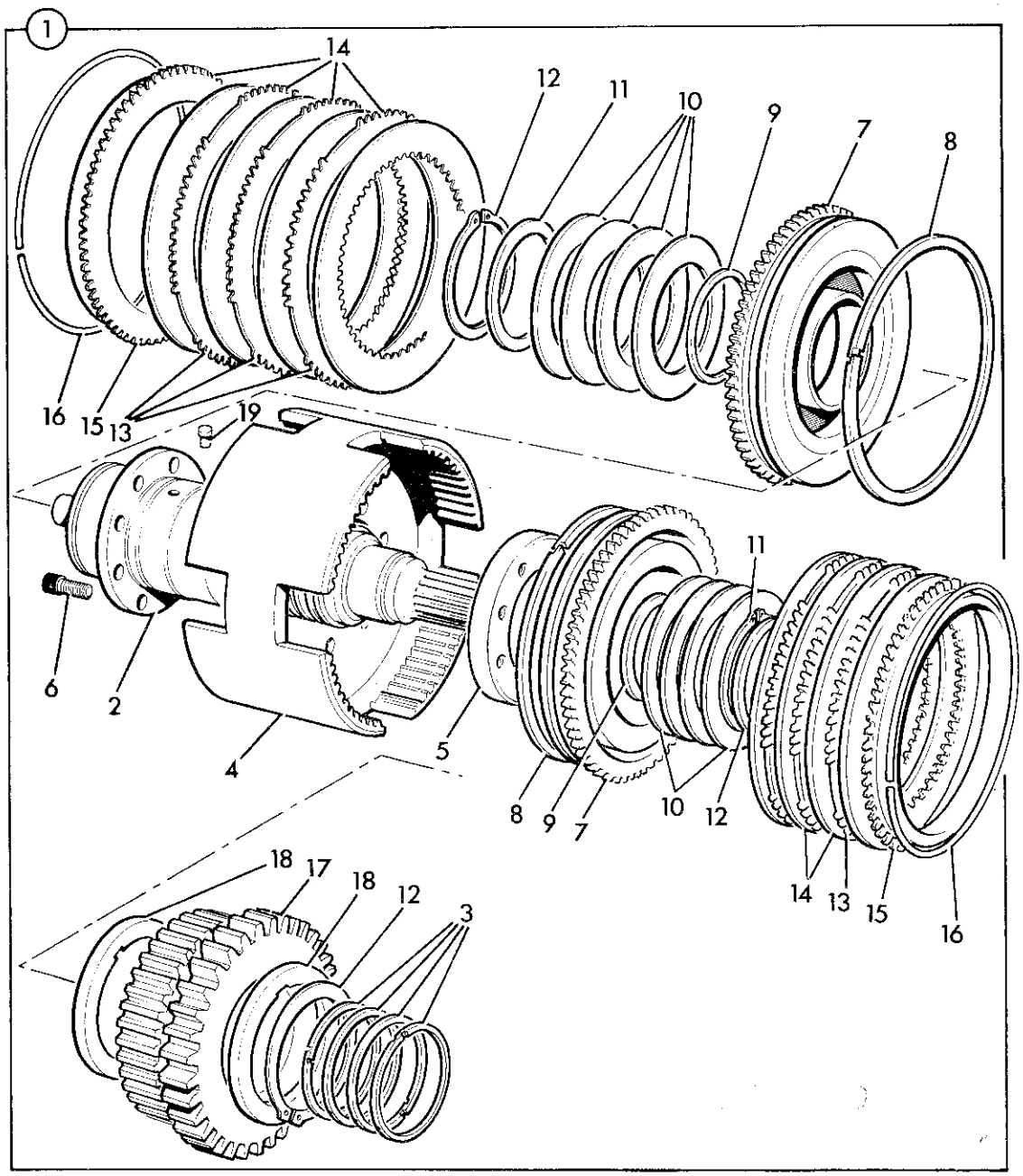
1
14
12
11
10
9
7
8
16
15
13
19
6
2
4
5
11
8
9
7
10
12
14
13
15
16
18
17
18
12
3

4688

RAJOUTÉ Vipat de chg JCB

Inversem

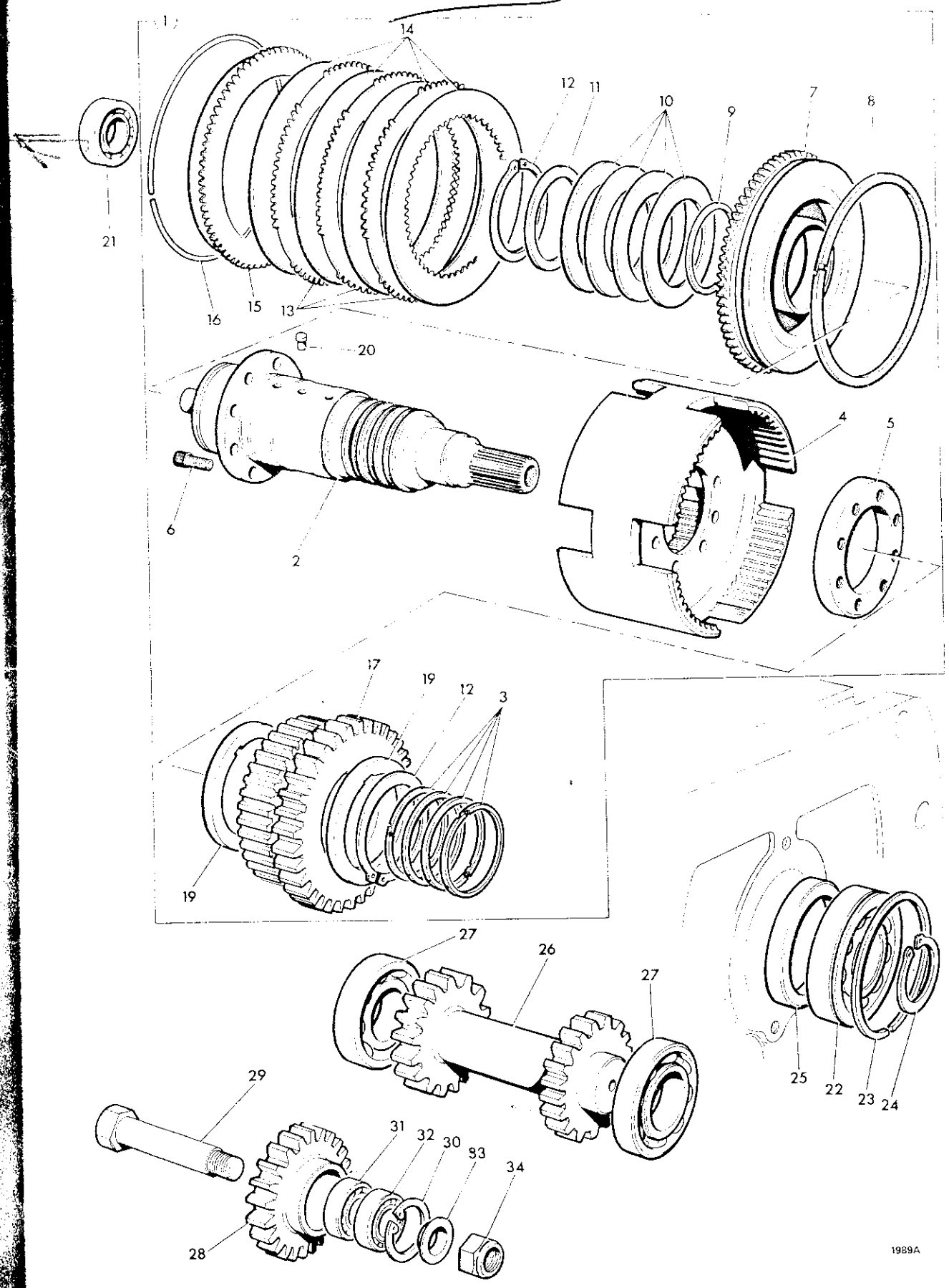

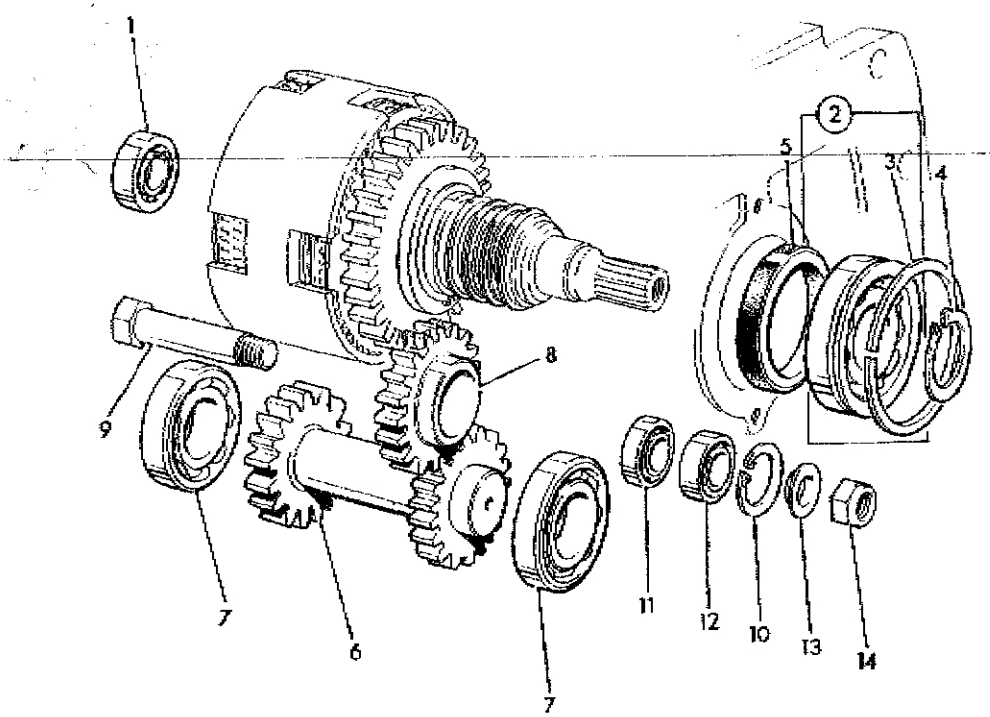

046870

RAJOUTÉ vient de chez JCB

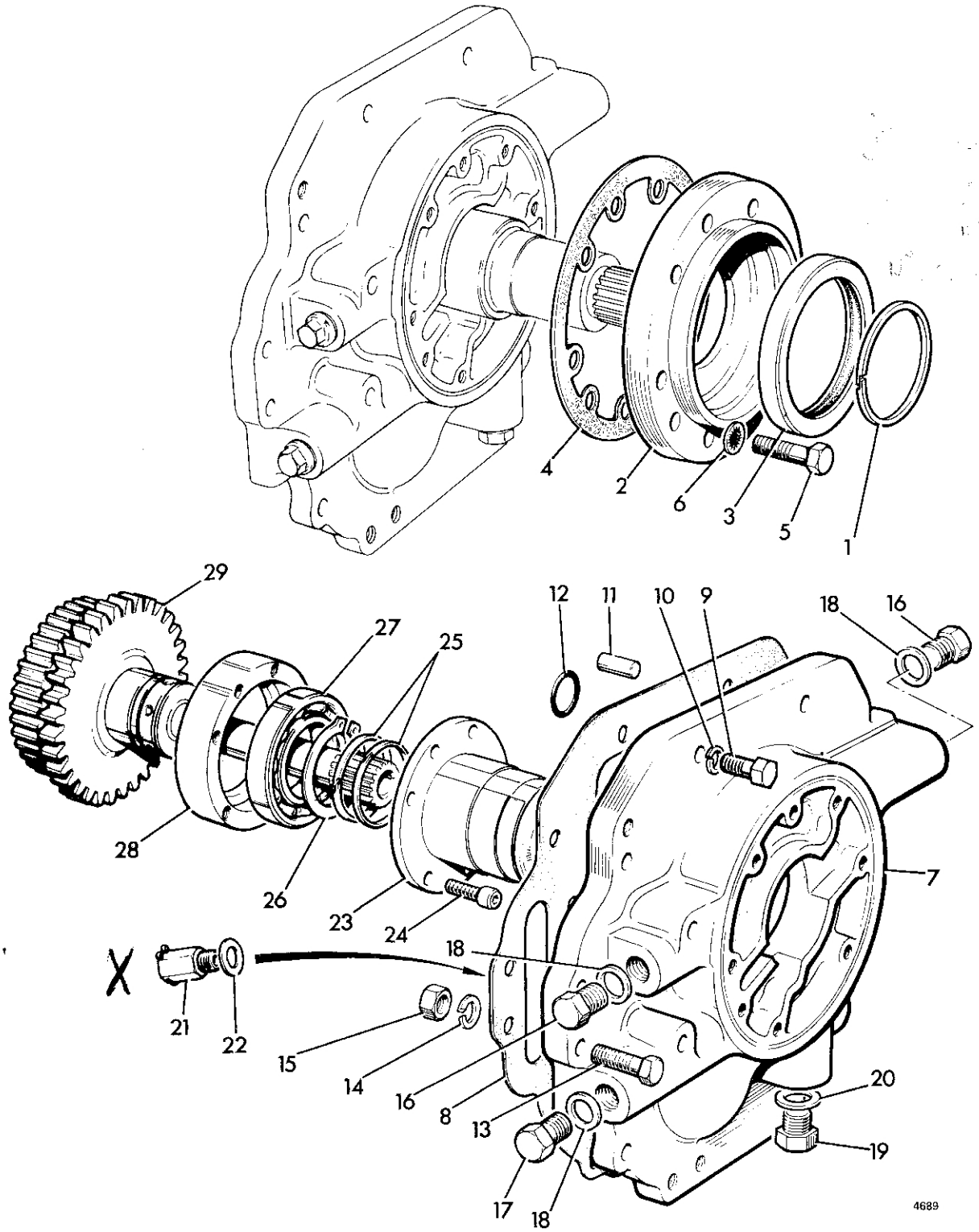
4
2
6
3
5
1
29
27
25
12
11
10
9
18
16
28
26
23
24
7
X
21
22
18
15
14
16
8
13
20
19
17
18
4689

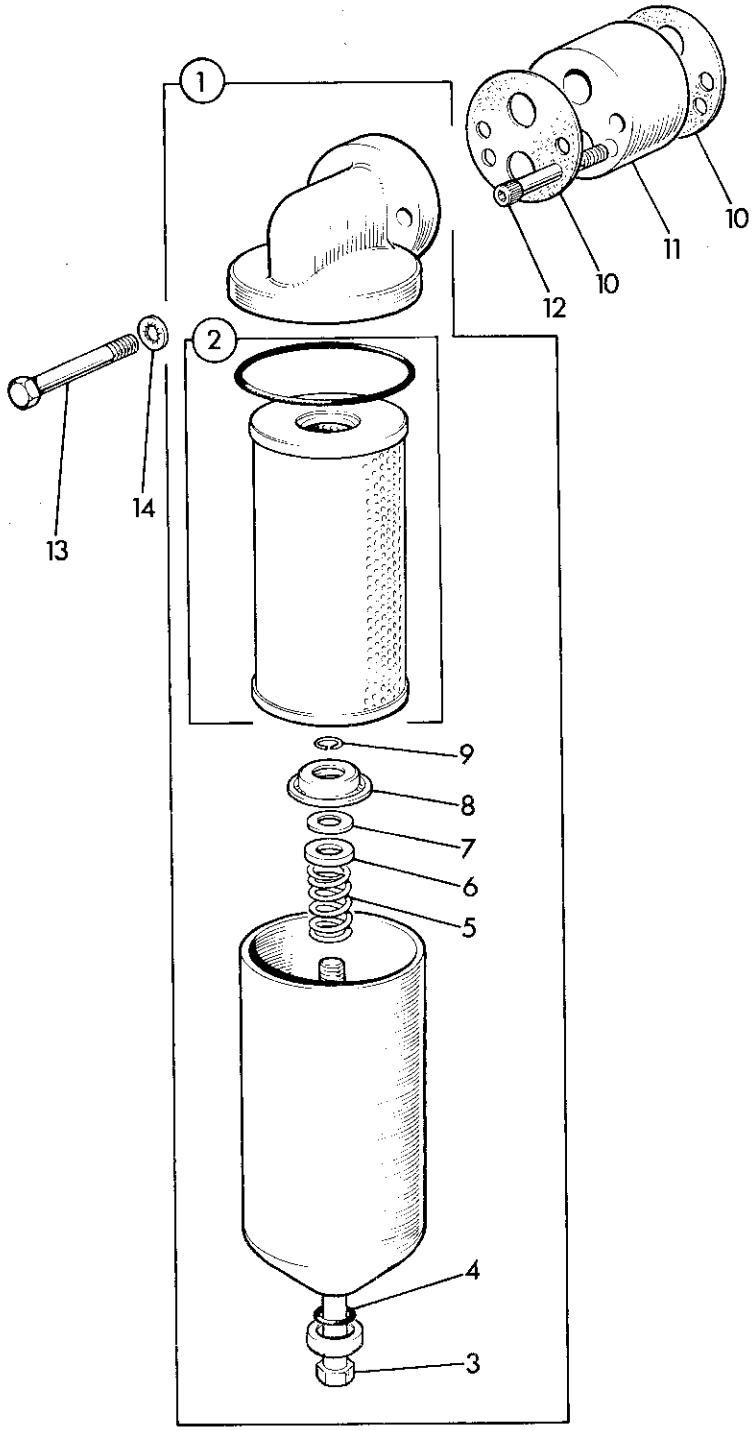

4690

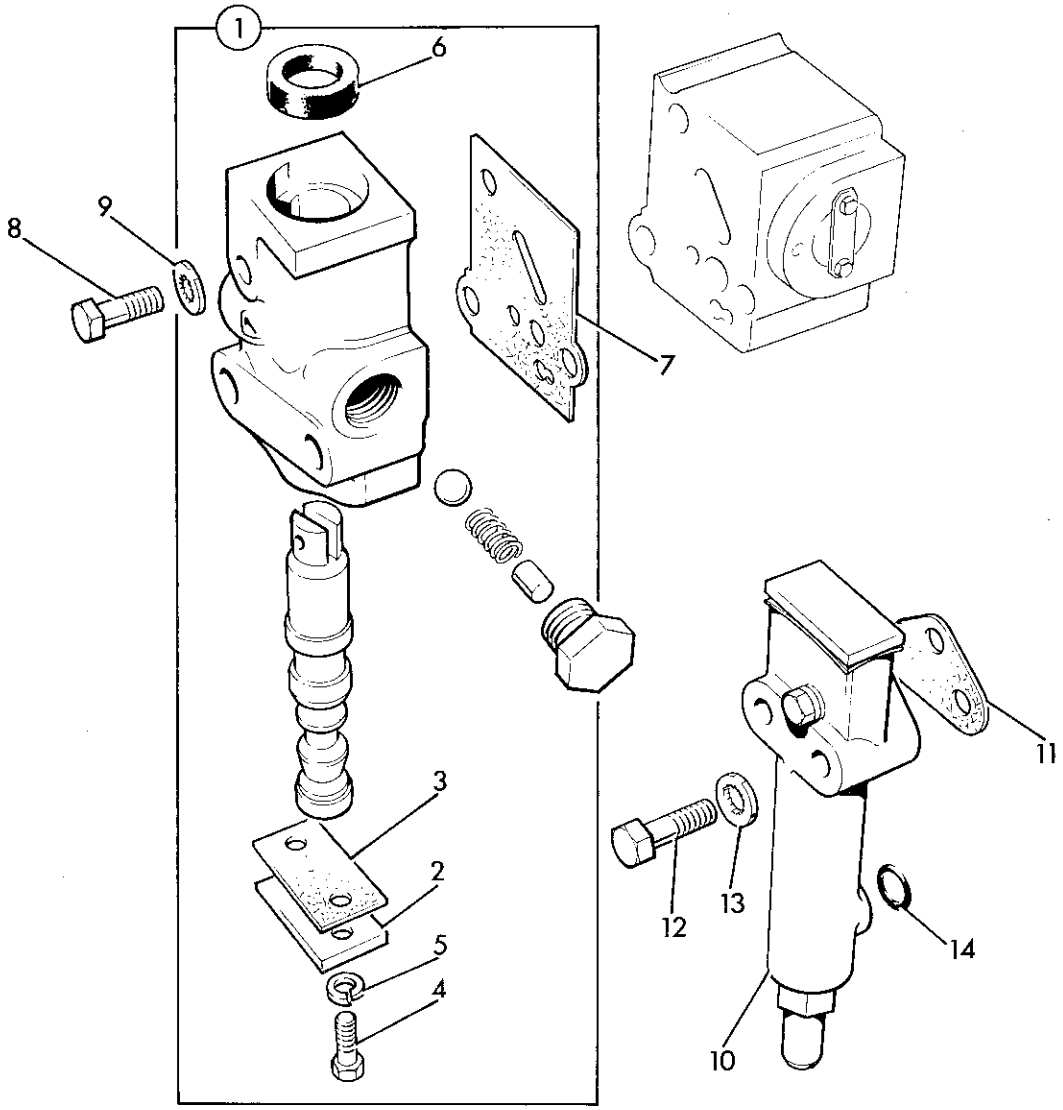

4691

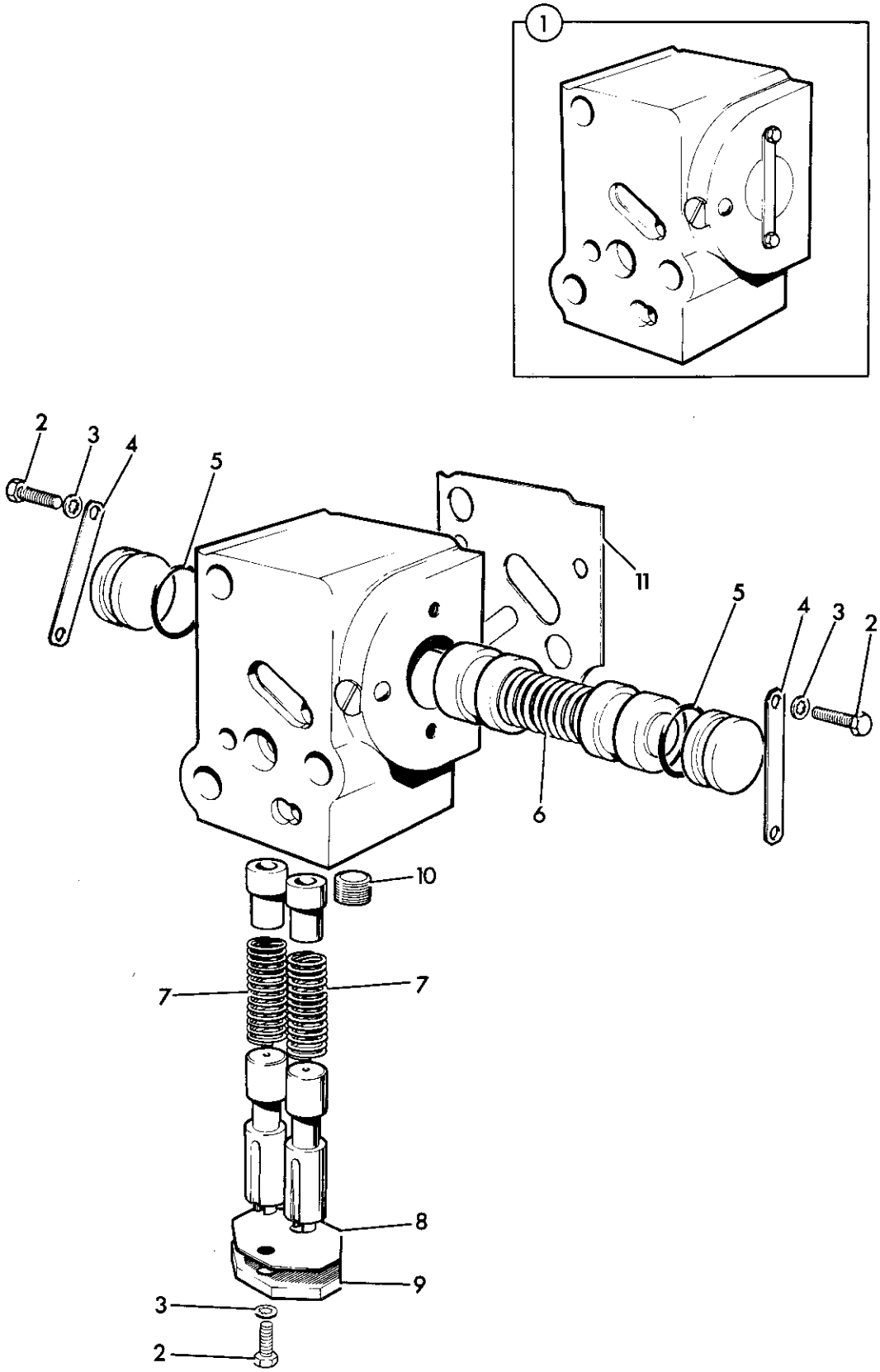

4692

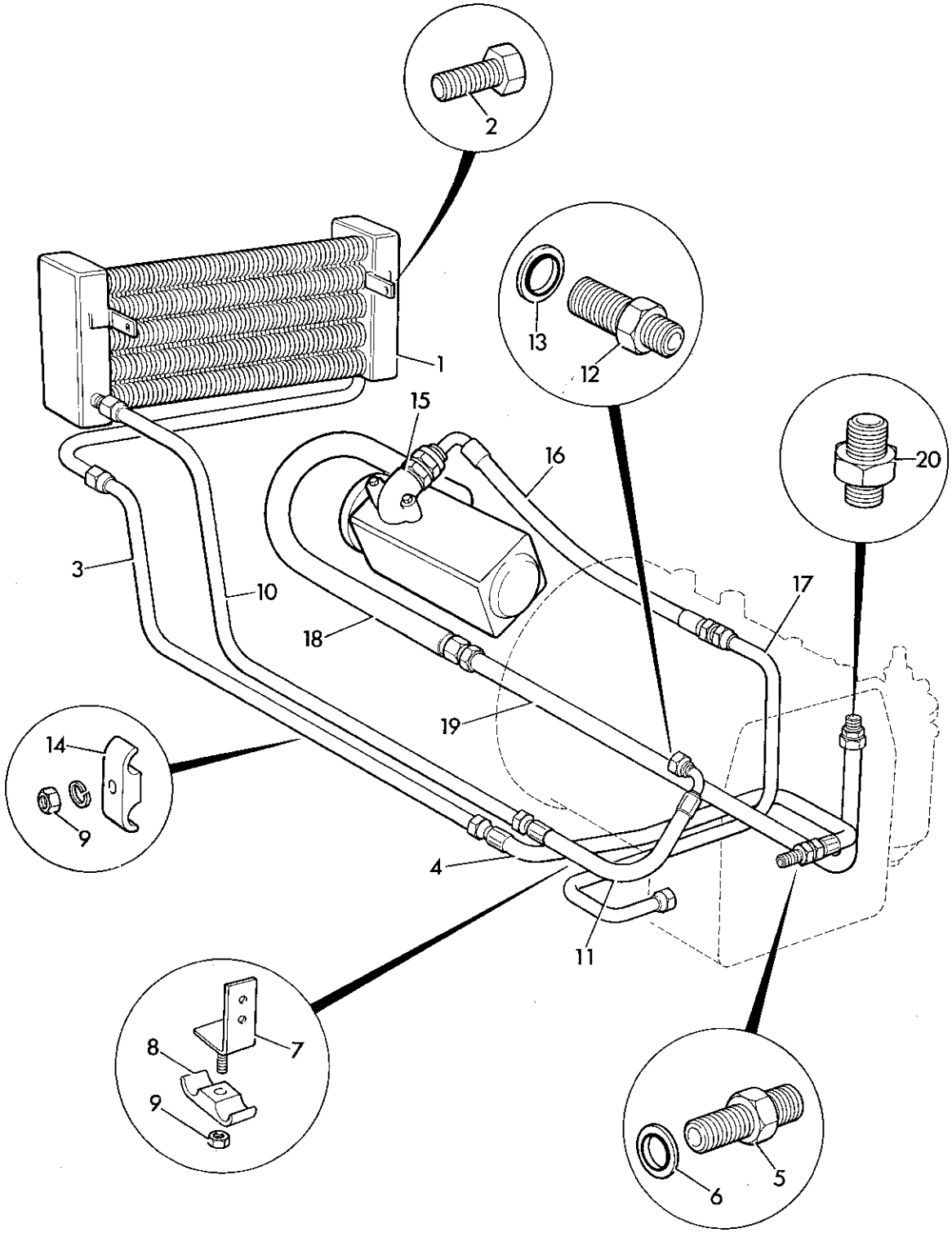

4923

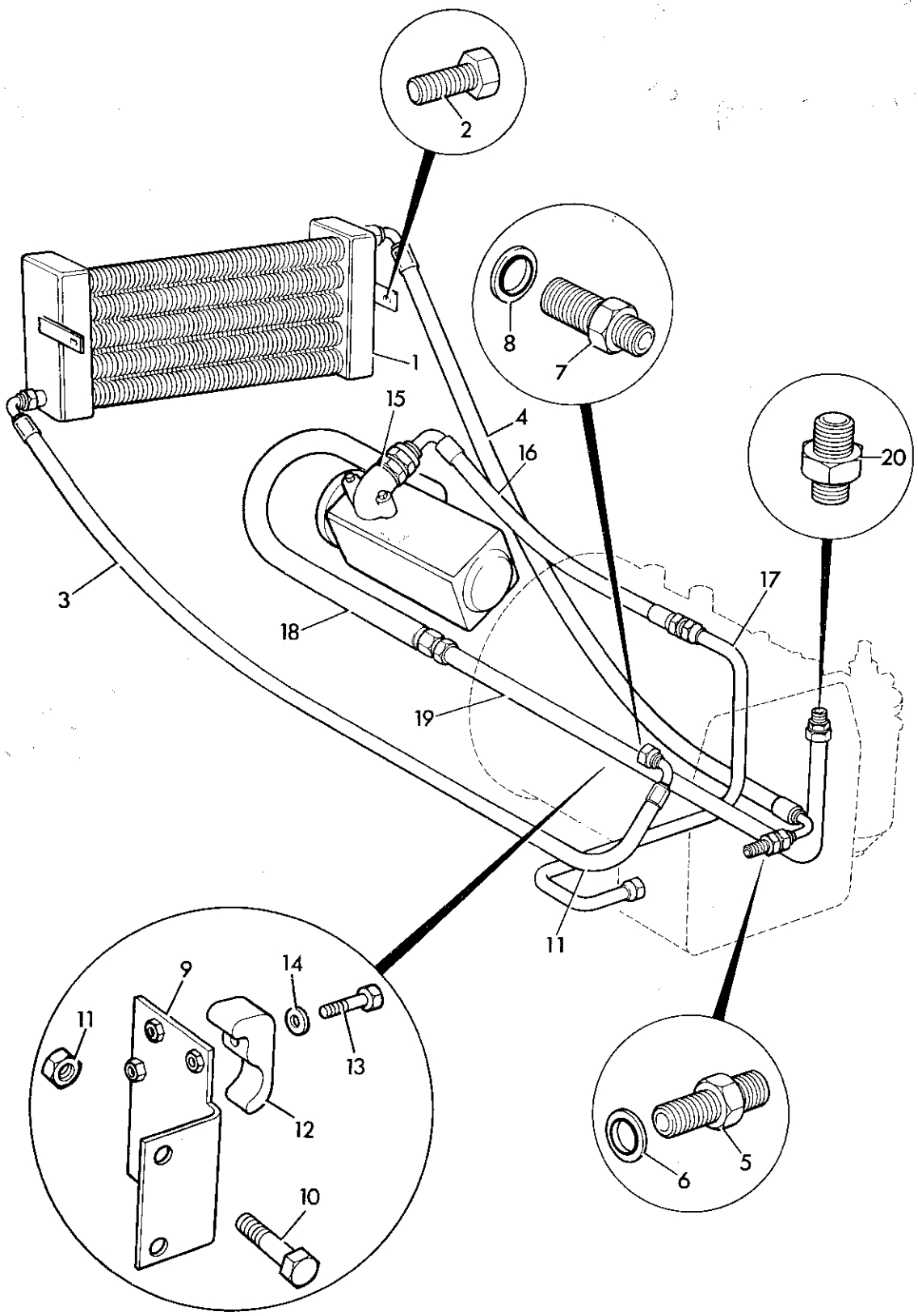

5003

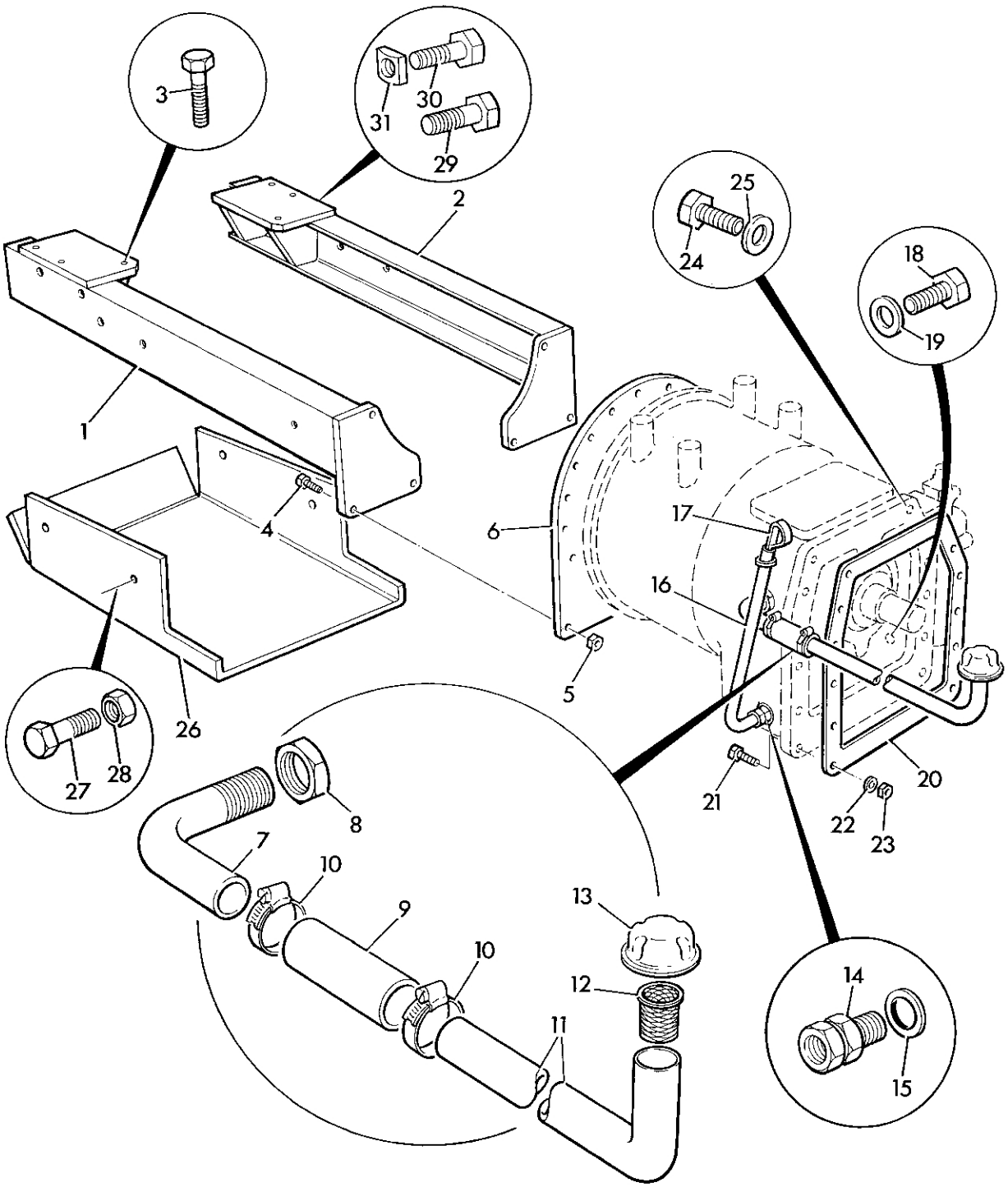
3
30
31
29
2
25
24
18
19
1
4
6
17
16
5
26
27
28
8
7
10
9
10
13
12
11
14
15
21
20
22
23

4924

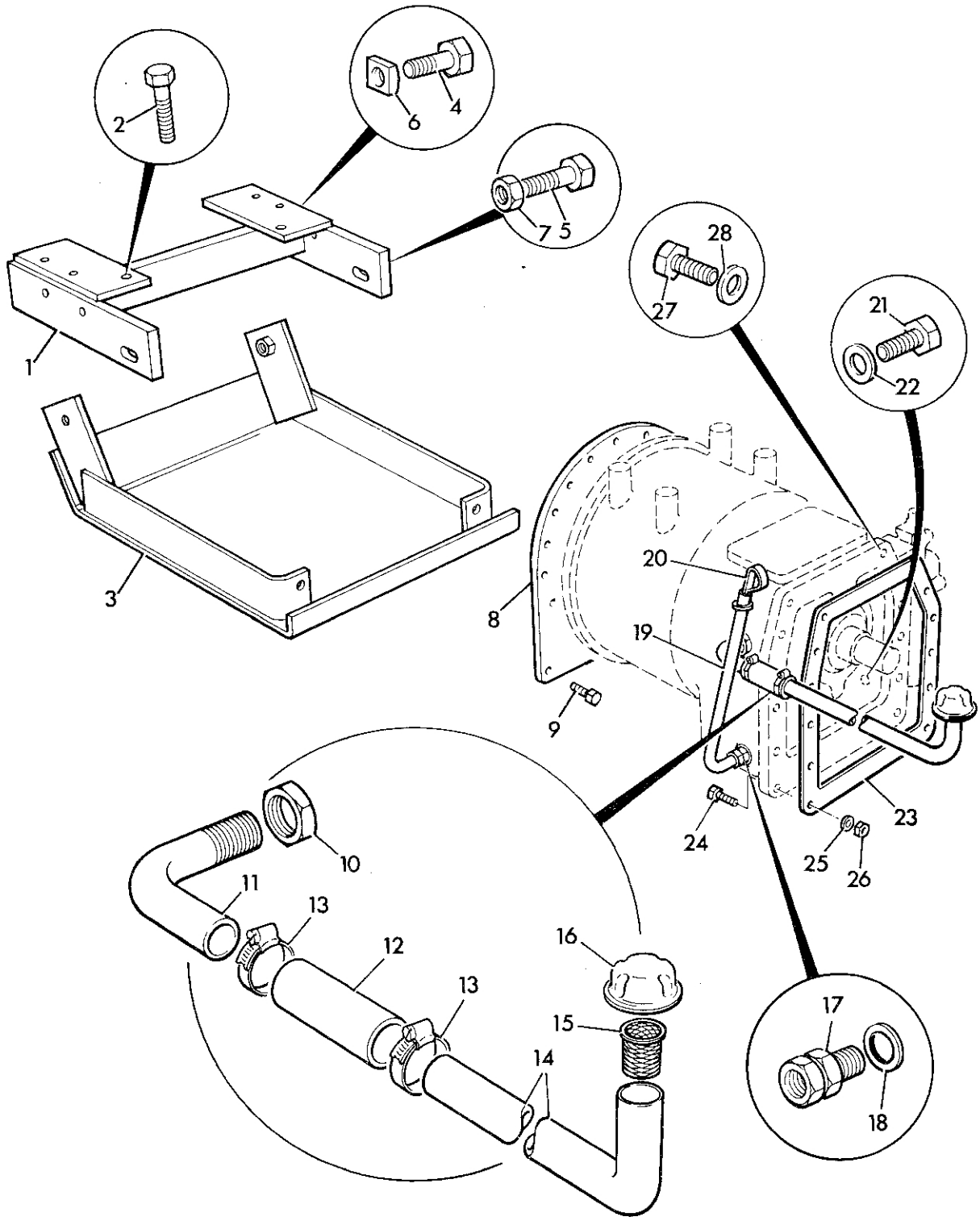

5004

FINAL DRIVE

F4

Description	3C Page	3C up to m/c no.	3D Page	3D up to m/c no.
Differential	F 4–1–1		F 4–1–1	
Half Shaft & Housing (STD)	F 4–2–1		F 4–2–1	
Half Shaft & Housing (with Wheel Brakes)	F 4–2–2		F 4–2–2	
Wheels & Tyres	F 4–3–1		F 4–3–1	

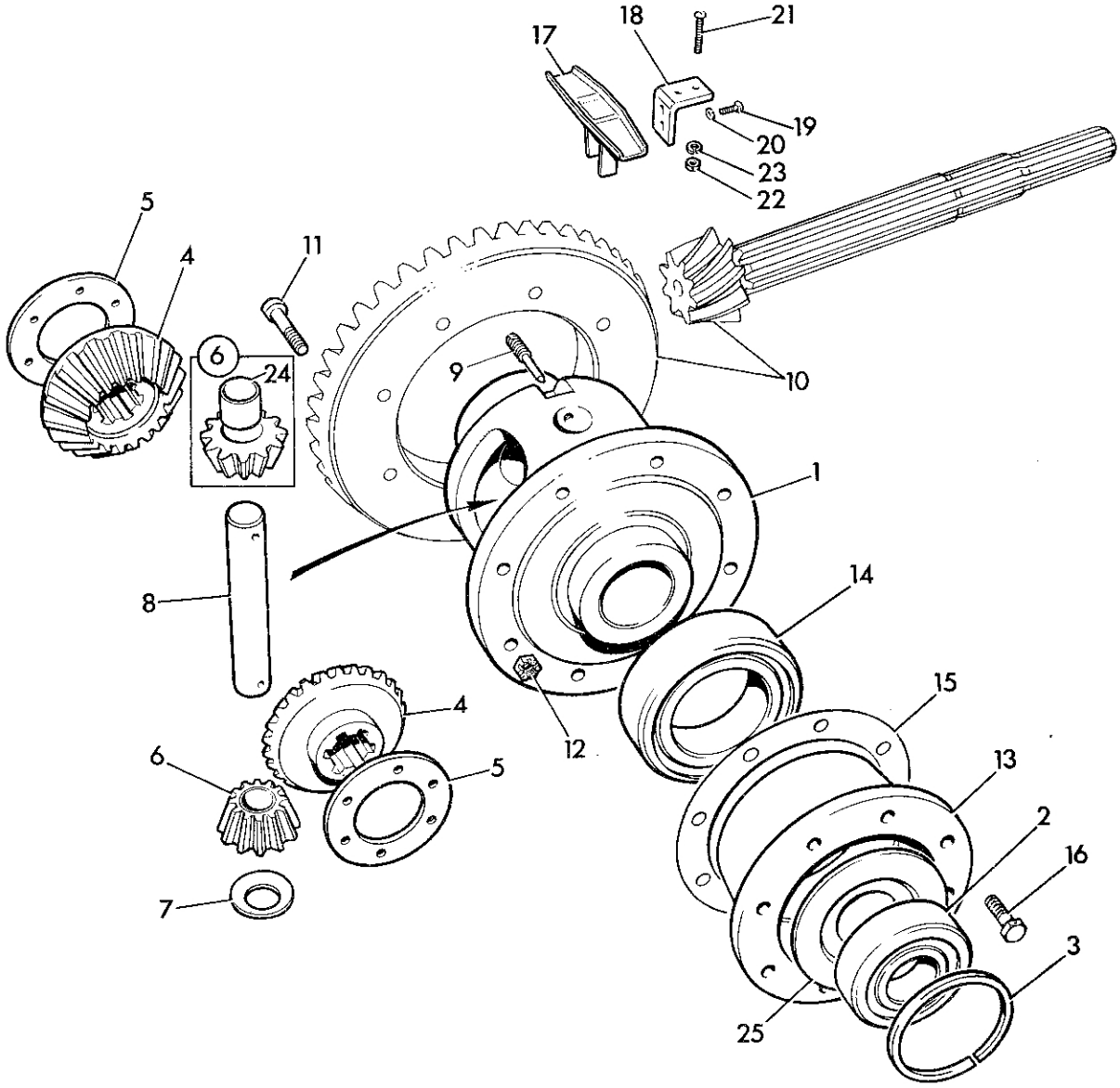

4693 A

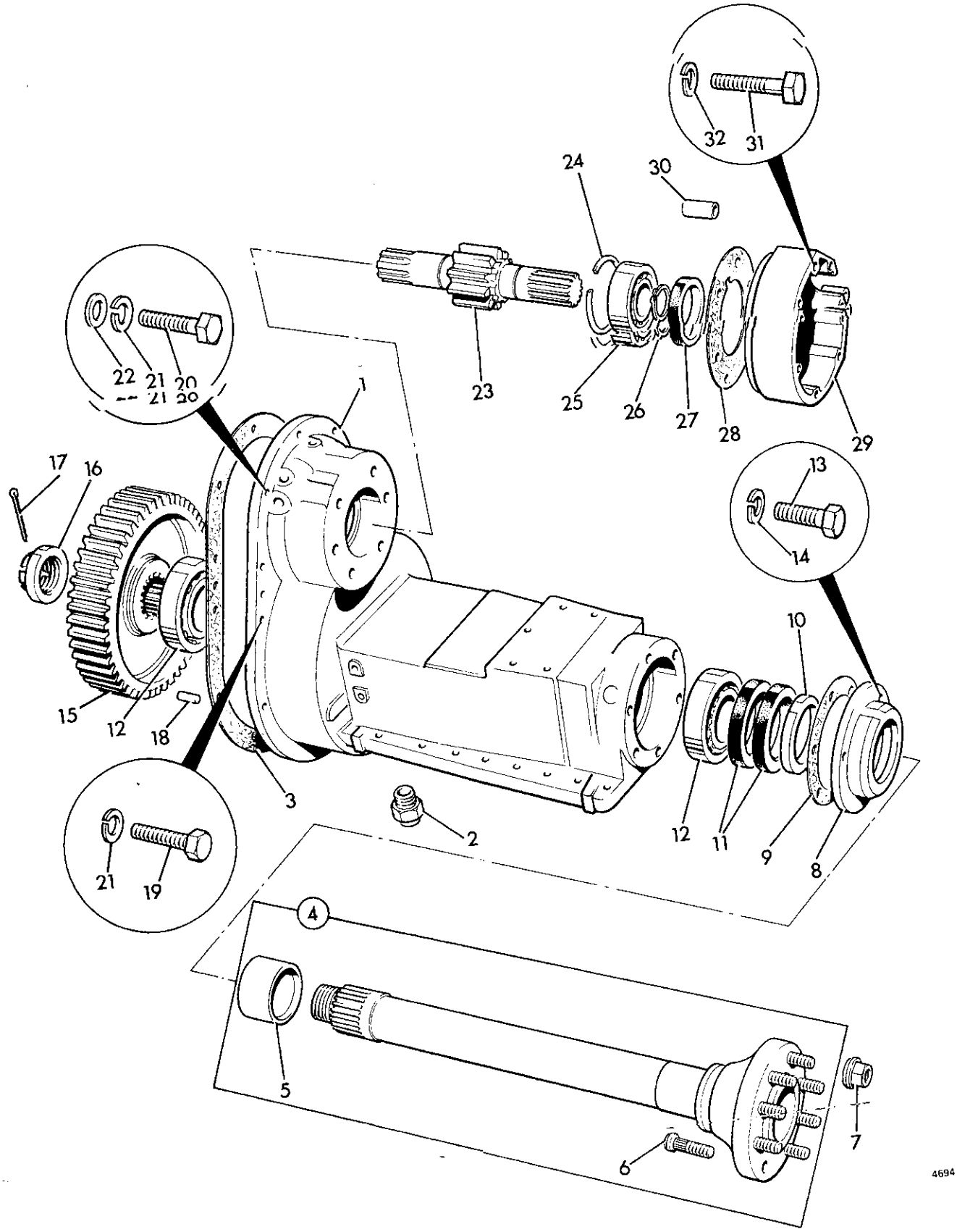
32
31
24
30
22
21
20
23
25
26
27
28
29
1
17
16
13
14
10
15
12
18
3
2
12
11
9
8
21
19
4
5
6
7
4694

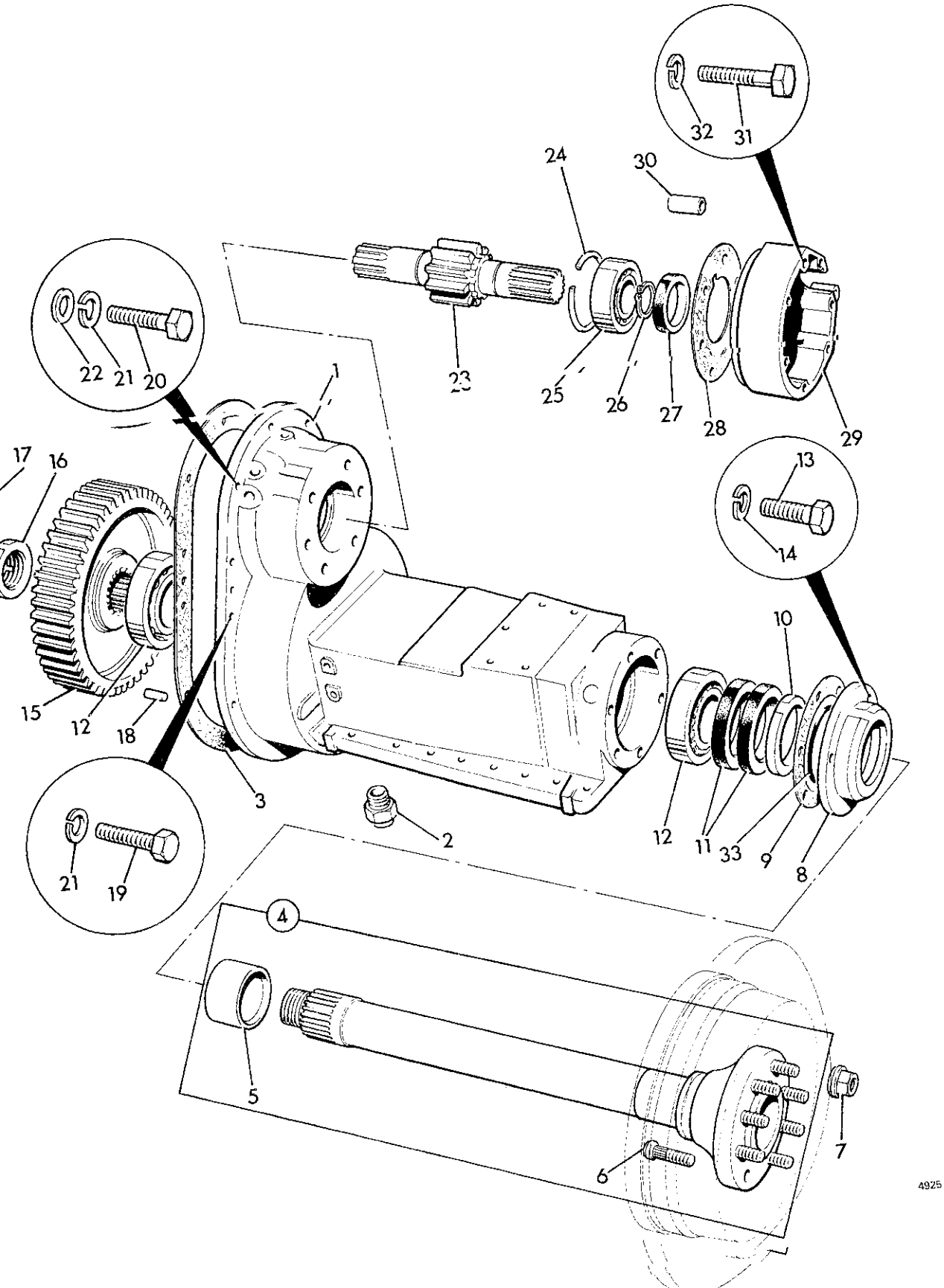
32
31
24
30
22
21
20
23
25
26
27
28
29
1
17
16
13
14
10
15
12
18
3
2
12
11
33
9
8
21
19
4
5
7
6
4925

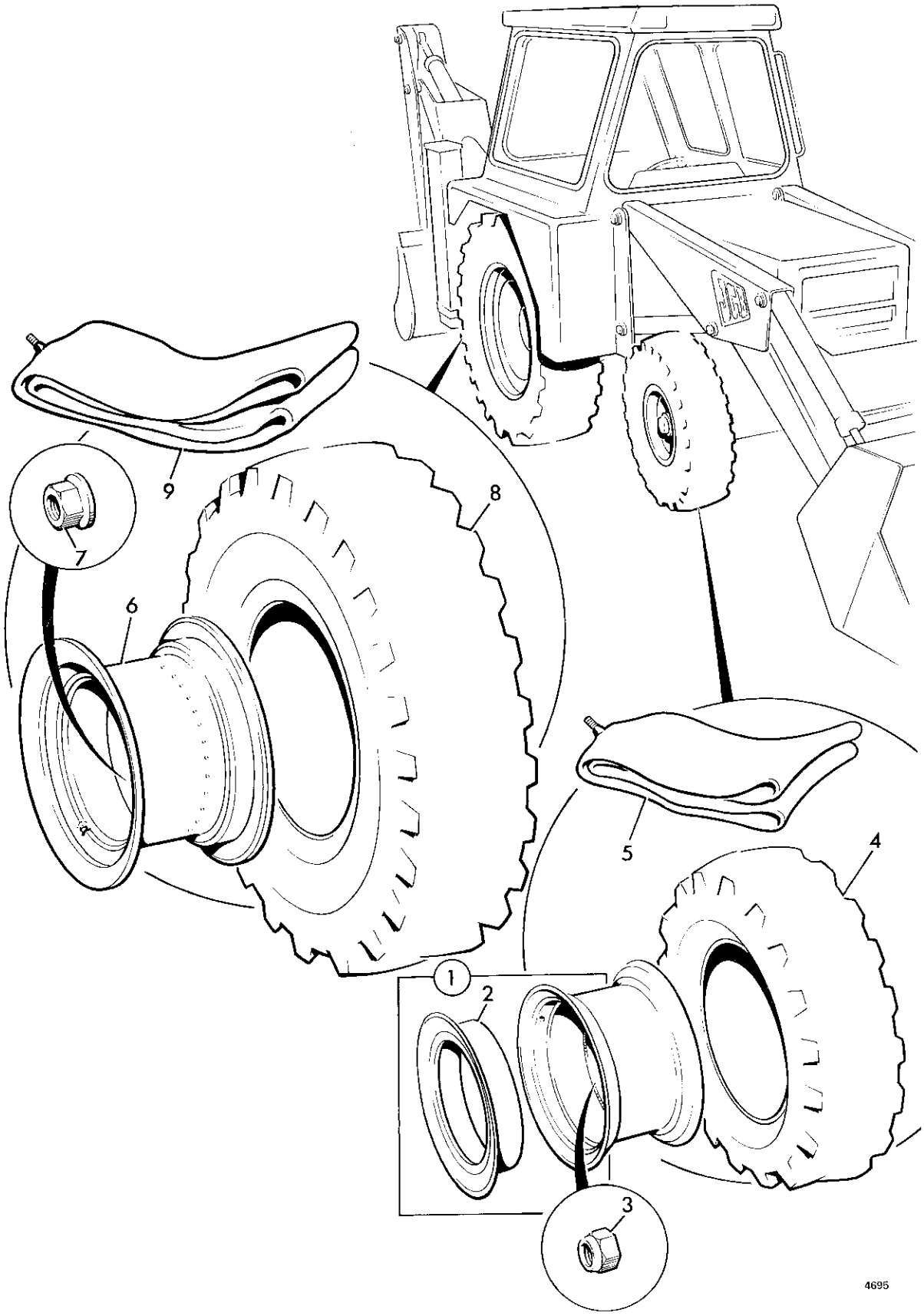
9
8
7
6
5
4
1
2
3
4695