Order Genuine Parts for Replacements

Satisfactory and efficient service in the operation of this or any other machine is endangered by the use of inferior repairs, as cheap parts invariably mean short life and high cost.

If parts could be manufactured at a lower cost and sold at lower prices without sacrificing quality, this would be done. The right material for the purpose and the knowledge acquired through many years of manufacturing enables International Harvester Company to produce quality that will not be found in imitation repairs.

Inferior repair parts are sold for IHC machines, but you take an unnecessary risk when you buy them.

Our customers should remember that whenever they find repairs furnished are not as GOOD as the parts on a New IHC Machine, they are NOT getting GENUINE parts.

Buying "will fit" parts to save money, is like stopping the clock to save time.

(PRINTED IN U. S. A.)

Instruction Book

TRACTRACTOR

Model TD-35 (Diesel)

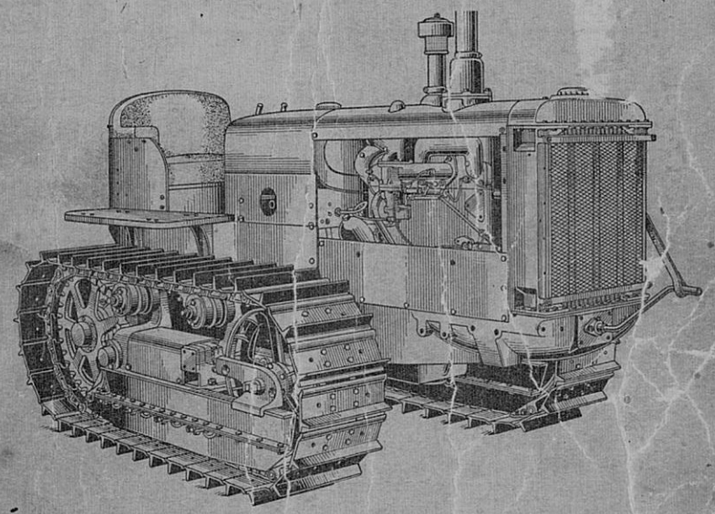

Important

TO OWNERS—

This book has been prepared and is furnished for the purpose of giving the user as much information as possible pertaining to the care and operation of this machine. The owner is urged to read and study this instruction book and, if ordinary care is exercised, he will be assured of satisfactory service.

Including sectional views and parts list

MANUFACTURED BY

INTERNATIONAL HARVESTER COMPANY

(INCORPORATED)

606 So. MICHIGAN AVE. CHICAGO, U. S. A.

INT. 5058. 3M—2-26-37. (PRESERVE THIS BOOK) (DOMESTIC, CANADA and EXPORT)

Examine the TracTracTor carefully and see that all oil holes are cleaned of paint and dirt—if any threaded oil holes are found with no fitting or pipe connections, look at the Lubrication Chart. If connection is shown, and not in place, it was lost and should be replaced before starting.

Special Precations with a New TracTracTor (Diesel)

1. Complete instructions for oiling are shown on "Lubrication Chart."

2. Before starting the engine or after any part of the fuel supply system has been disconnected, check for air in the system. (*See instructions on page 6.*)

3. Engine is filled with oil suitable for "running in" a new engine. *Before operating under heavy load, the crankcase should be drained completely and filled with oil as specified in the "Lubrication Chart."*

4. TracTracTors shipped Domestic and Canada are properly filled with lubricating oil in all parts when shipped from the factory. *All oil is drained from TracTracTors shipped Export.* However, TracTracTor should be checked over for proper quantities of oil before starting.

5. *Do not operate a new TracTracTor immediately on full load.* The TracTracTor should never be loaded to full capacity until it has been run light for a reasonable length of time. *Do not overload the TracTracTor at any time.*

6. *Read Instruction Book carefully.*

Caution: Based on the fire hazard and insurance regulations, we do not recommend the use of gasoline for the cleaning of parts, at least not when service is performed inside of buildings. A less inflammable fluid than gasoline should be used, such as Stoddard solvent or kerosene.

Ordering Repairs

When ordering repairs be sure to give Serial Number and Model of TracTracTor and name and number of Part Ordered.

This book contains, in addition to instructions for operating, instructions and illustrations pertaining to certain simple adjustments and replacements which can readily be made. However, the owner should consult the service dealer before attempting a general overhauling or when any mechanical difficulties occur, as he has the necessary equipment for doing the work.

Specifications will be found on inside back cover.
Index will be found on page 1.

Index

TO OWNERS:

This TracTracTor is designed and built to give good performance and maximum service. Quality materials and good workmanship are employed throughout the entire unit.

The suggesions and requirements for operating outlined in this book are essential to maintain satisfactory performance and economical service. The care and daily attention given the TracTracTor will largely determine its maintenance cost and success of operation.

TracTracTor Owners should use the extensive facilities offered by McCormick-Deering and International dealers when service is needed that requires the knowledge of an experienced service man. This is advisable as Dealers are kept informed on the best methods of servicing TracTracTors and are in a position to give satisfactory service.

Operating Precautions

Read Instructions Book carefully.

Follow "Lubrication Chart."

Before cranking TracTracTor engine, be sure -
Gear shift lever is in neutral position,
Engine clutch lever is in disengaged position,
Cooling system is filled with water,
Engine has sufficient oil in crankcase.

When cranking the engine, operator should take his position so as to avoid being struck by starting crank if there is a reversal of the direction of the engine from any cause whatsoever.

Do not attempt to vent air at injection pump while engine is running.

When starting the TracTracTor always engage clutch gradually, so engine will pick up the load slowly. This is particularly necessary when going up a steep hill, climbing out of ditches or when hitched to a heavy or difficult load. Never hitch to a stump or other object by means of a long chain or rope with slack so that when TracTracTor moves forward it will jerk into the load.

Never operate engine at more than the regular governed speed. Excessive speeds are dangerous.

Care should be exercised when TracTracTor is in motion to prevent accidents and personal injuries.

Do not use brake pedals as a foot rest; this causes undue wear on brake parts.

Never pour cold water into radiator if engine is hot.

Do not overload the TracTracTor at any time.

Never fill gasoline tank when lamps are lighted or open flame is near, or engine is running. Keep funnel in contact with metal of tank when pouring in fuel, to avoid possibility of an electric spark igniting the gas. Be very careful about lighting matches near gasoline, as the air within a radius of several feet is permeated with a highly explosive vapor.

Note: When operating in water or under very wet conditions where water is apt to come up to level of drain plugs on engine clutch compartment, rear main frame or steering clutch compartment, these plugs, having cotters, should be removed and replaced with solid plugs, which have no holes or cotters. Occasionally remove plugs to allow any oil accumulation to drain out.

Lubrication

S.A.E. Numbers or weights of oil and lubricants recommended.

	Engine Crankcase	Magneto & Coupling	Zerk Fittings	Air Cleaner
Summer	SAE-30	Very Light, Cream Sep. or Sewing Machine Oil	Approved Lubricant SAE-160	SAE-20 or Lighter
Winter	SAE-20 or SAE-10	Very Light, Cream Sep. or Sewing Machine Oil *	Approved Lubricant SAE-90	SAE-20 or Lighter

** Use kerosene in magneto coupling during cold weather.*

Be sure to use a mineral oil for lubricating this Diesel Engine. Do not use top cylinder or valve oils.

Note: Engine lubricating oil shall be of well refined oils, free from water, sediment, acid, resin or any other substance not derived from petroleum. Oil shall not corrode any metal used in engine construction.

Proper Lubrication is very important and instructions should be followed closely. (See "Lubrication Chart").

(See Special Instructions for Cold Weather Operation).

Transmission, Sprocket Drive, Track Rollers and Idlers, Etc.

	Transmission Case	Sprocket Drive Gear Case	Track Rollers and Idlers
Summer	Approved Lubricant SAE-160	Approved Lubricant SAE-160	Approved Lubricant SAE-160
Winter	Approved Lubricant SAE-90	Approved Lubricant SAE-90	Approved Lubricant SAE-90

See Instructions on page 15 for filling Compressor (gun).

The lubricant used for Transmissions, etc., Alemite, Lincoln and Zerk System should be a good grade of oil and conform to the following:-

SAE-160 should be used when minimum temperature is above 40° F.
SAE-90 should be used when minimum temperature is below 40° F.

Do not use grease. The preferred lubricant should be made from mineral oil and should be free from solid materials, which are undesirable for ball or roller bearing lubrication.

Gasoline Operation

Paragraphs are numbered to correspond with numbers on illustrations.

Preparations for Starting

Lubrication

Para.	Illust.	
1	.....	Oil magneto and impulse coupling. Check oil level of Fuel Injection Pump. Check oil level of air cleaner. Check oil level of engine crankcase. Check oil level of transmission case. Check oil level of sprocket drive gear cases. Check TracTracTor carefully with "Lubrication Chart". If any lubrication connections are missing, replace before starting. Lubricate each place throughout entire TracTracTor *as instructed on "Lubrication Chart".*

Engine Cooling System - *(Water Capacity 10 gallons Approximately)*

2	3	Close drain cock on water pump.
3	4	Close drain cock in crank-case side.
4	1	Close radiator drain cap "B".
5	1	Remove radiator filler cap "A" and fill radiator with clean water to the level 1" above baffle plate (inside of filler hole). Keep filled to full level. Use soft or rain water if possible.
6	1	Do not pour cold water into an empty system when engine is very hot.
7	...	In temperatures below 32° F. *See Cold Weather Operation pages 13 and 14.*

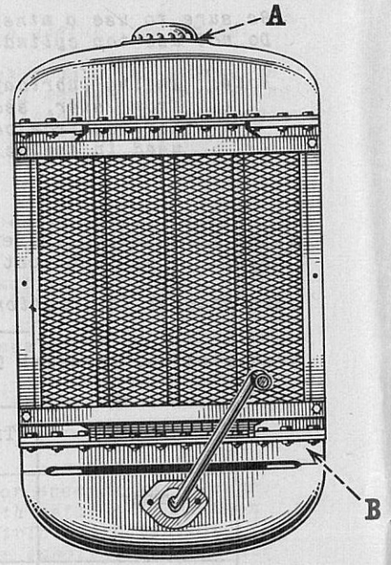

Illustration No. 1

Radiator Curtain

8	1	It is important that the water going to the engine should be as warm as possible. For this reason it is well to keep the radiator curtain adjusted at all times as high as possible. Care should be taken that it is not so high as to cause the water to become so hot that it will boil away. It is always well to raise the curtain up to the top when starting the engine and then lower it after engine has warmed up.

Important! Do not start the engine in freezing weather without first covering the radiator completely.

Preparations for Starting - Continued

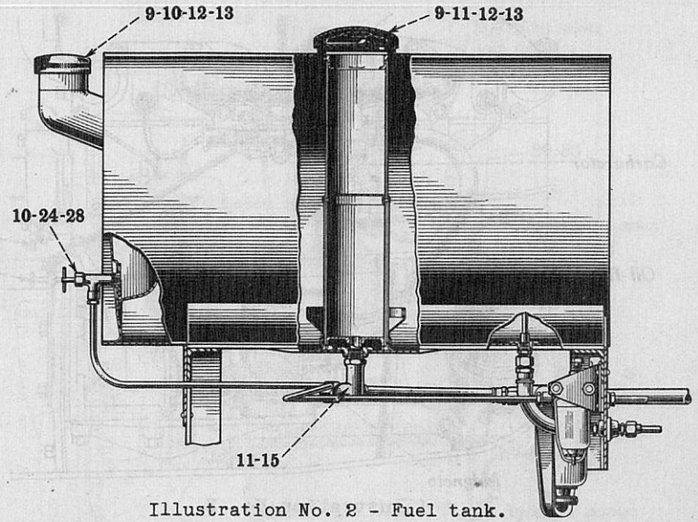

Illustration No. 2 - Fuel tank.

Paragraphs are numbered to correspond with numbers on the illustrations.

Para.	Illust.	
9	2	Fuel oil tank capacity is approximately 40 gallons. Gasoline tank capacity is approximately 1¼ gallons.
10	2, 5	Fill gasoline tank with clean gasoline. *(Do not open gasoline valve yet .*
11	2, 5	Fill fuel tank with clean fuel oil *(See specifications below.* Open fuel shut-off valve under tank.
12	2	Carefully strain gasoline and fuel oil through a cloth when filling the fuel tank. Be sure fuels are free from water. Do not use dirty fuel.
13	2	Fuel tanks have air vents in cap, keep vents open.

Fuel Oil Specifications - Do not use dirty fuel

Gravity (minimum)		24°B
Viscosity (Saybolt Universal) (at 100°F.)	Minimum	35 seconds
	Maximum	100 seconds
Sulphur (by weight)	Maximum	1.5%
Conradson Carbon	Maximum	1.0%
Flash Point	Minimum	150°F or legal minimum
Water and Sediment (by volume)	Maximum	.5%
Pour Point	Must be lower than minimum temperature at which fuel oil is to be used.	
Distillation test	10% at 460°F.	max.
Distillation test	95% at 675°F.	max.
Distillation test	End point 700°F.	max.

The supplier or distributor shall assume the responsibility of fuel oil of good ignition and burning qualities.

Do not use a lower grade of fuel than specified above.

It is recommended that a grade equivalent to household furnace fuel oil be used.

It is important that clean fuel oil be used to obtain best results.

Preparations For Starting - Continued

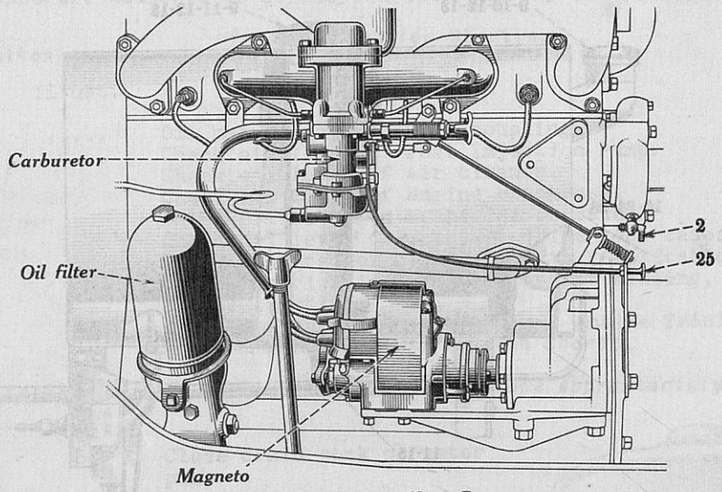

Illustration No. 3

Engine, Right Side, showing Magneto, Carburetor, Primer, etc.

Paragraphs are numbered to correspond with numbers on the illustrations

Air Vents at Injection Pump and Fuel Strainer

Para.	Illust.	
14	...	Before starting a new engine or after any part of the fuel supply system has been disconnected, check for air in the system.
15	2,4 & 5	To vent the air, open bleeder valve on top of fuel injection pump housing; also open bleeder on top of fuel oil filter and on top of water trap. Open fuel shut-off valve. Leave bleeders open until fuel flows through, then close. *Caution: - Do not attempt to vent the air while engine is running.*
		Note: - If unit has been in storage for a long period, see special instructions on page 13.

Spark Control

16	...	The magneto spark is set in a fixed position for running; no manual operation is necessary.
17	...	The F-4 Magneto used with the Diesel Engine is held in correct timing position by a link on the breaker housing cover arm. When starting, the engine fires on dead center while the impulse coupling is functioning. When the impulse coupling throws-out or disengages, operation is direct from the engine drive; then the spark is automatically advanced to 15° and no further attention is necessary.
18	...	The magneto spark is eliminated when the engine changes over to Diesel operation, and is automatically ready for operation when Diesel operation ceases.

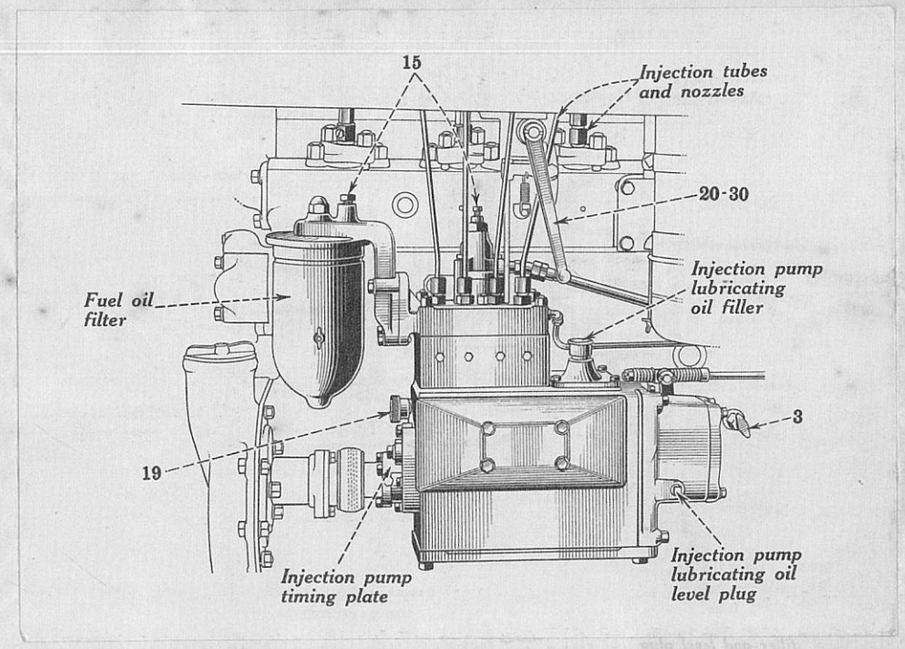

Illustration No. 4

Engine, Left Side, Showing Fuel Oil Filter, Fuel Injection Pump, etc.

Paragraphs are numbered to correspond with numbers on illustrations.

Injection Pump Starting Knob

Para.	Illust.	
19	4	Turn the knurled hand knob at the drive end of the injection pump until notch in knob is directly toward operator.

Starting Release

20	4	Throw in the compression starting release by pushing in on release handle, then turning handle to the left and clockwise until starting lever jaw engages with starting release lever.
21	6	Place transmission gear shift lever in neutral position.

Engine Speed Control Hand Lever

22	5	*Caution: The engine (or governor) speed control hand lever should be set in shut-off position (lever pulled back) until the starting device trips from gasoline to Diesel operation. If this is not done, engine will be flooded with fuel oil, exhaust will be extremely smoky and engine will knock when switching to Diesel operation.*

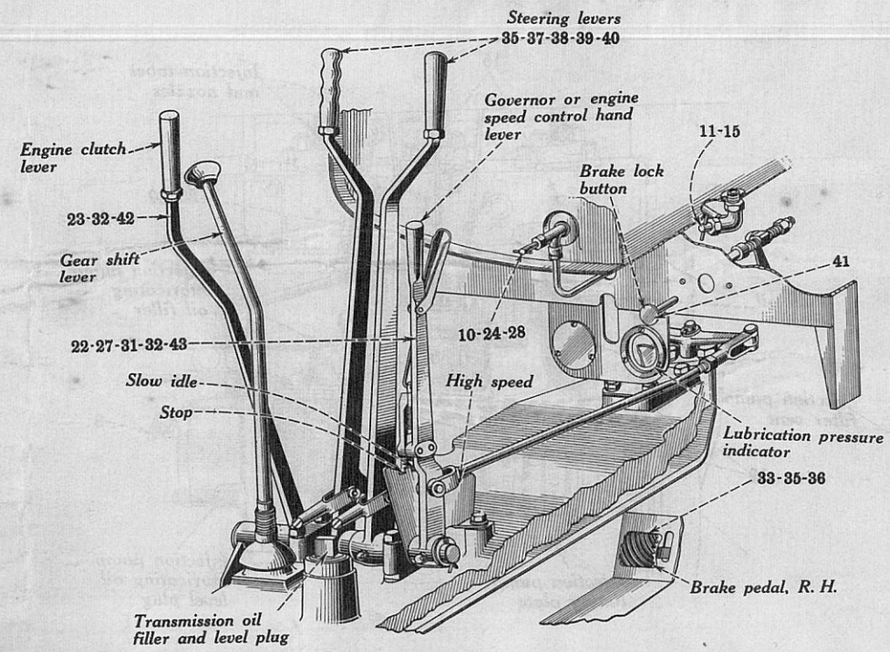

Illustration No. 5

Operating Controls

Paragraphs are numbered to correspond with numbers on the illustrations.

Clutch Hand Lever (Over-Center Type)

Para.	Illust.	
23	5	*Be sure clutch is disengaged before starting engine.* The clutch hand control lever should be pushed forward to disengage the clutch. When lever is pulled back toward operator, clutch is engaged.

Gasoline Shut-Off Valve

24	2,5	Open gasoline shut-off valve at supply tank.

To Start Engine

25	3	Pull out the choke rod all the way. Crank engine with two or three half up-strokes. Push choke back two-thirds and crank with half up-strokes until engine starts.

When engine is very cold (temperature 30° or below) eight or ten half up-strokes (with choke fully closed) may be necessary. *Choke should not be opened more than one-eighth until engine starts.*

See priming instructions on page 13.

For starting in cold weather, see page 13.

Paragraphs are numbered to correspond with numbers on the illustrations.

Engine Speed when Operating on Gasoline

Para.	Illust.	
26	...	The engine speed, when operating on gasoline, should not exceed 800 R.P.M. This is adjustable through stop screw and spring at carburetor. *(See Carburetor Instructions, page 22.)*

Operation as a Diesel Engine

27	5	After engine has operated on gasoline for about 1 minute, the starting release lever latch will automatically release, *then immediately advance engine speed control lever part way* and the engine should operate on fuel oil as a Diesel engine.

Gasoline Shut-Off Valve and Carburetor

28	2,5	*Be sure to close the gasoline shut-off valve at supply tank after engine is operating on Diesel cycle.*
29	...	Carburetor is automatically cut out when on Diesel operation, and is ready for use again when starting on gasoline.
30	4	Starting release lever must be reset again to start engine on gasoline.

The engine may start noisily when Diesel operation begins, but noise will be eliminated as the engine warms up.

Engine Speed Control Hand Lever

31	5	Governor or engine speed control hand lever must be adjusted for proper advance for load to be handled and should not be fully advanced until the engine has been run a few minutes. This will insure thorough distribution of the lubricating oil.

No. 1 notch, which is the notch nearest the fuel tank, is for full load and will give an idle speed of approximately 1225 R.P.M., with a full load speed of 1100 R.P.M.

The slow idle speed will be between 700 to 750 R.P.M.

The notch nearest the operator is stop position.

Engine will deliver full pulling capacity at the reduced speed. The travel speed of TracTracTor is reduced proportionately with speed adjuster in slower position.

To Start The Tractractor

32	5,6	With the engine speed control hand lever set in the desired position, push forward on engine clutch control lever (to disengage the clutch) then move gear shift lever to desired speed and pull back on clutch lever.
33	5	*Do not use the brake pedals as a foot rest. This will cause undue wear on the brake parts.*

Paragraphs are numbered to correspond with numbers on the illustrations.

Gear Shifting

Para. Illust.

34 6 *Always disengage clutch before making a gear shift.*

L - Low speed forward.

2 - 2nd speed forward.

3 - 3rd speed forward.

4 - 4th speed forward.

H - High speed forward.

R - Reverse.

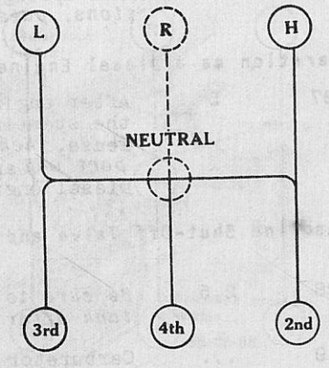

Illustration No. 6
Showing different positions of gear shifting lever.

Steering The Tractractor

35 5 Steering the TracTracTor is accomplished by means of the the two hand levers in front of the operator. Pulling back on either steering lever will cause TracTracTor to turn in that direction. The degree of turning can be governed by the application of foot brake on side toward which it is desired to turn.

Do not apply steering brake until steering clutch is fully released.

36 5 When pulling a load it is not necessary to use steering brakes except to make sharp turns; - the load itself acts as a brake. *Do not use brakes unless necessary to make required turn.*

37 5 Pulling back on either steering lever releases steering clutch, making track on that side inoperative while opposite being under power causes inoperative track to become a pivoting point and TracTracTor turns in that direction.

38 5 Avoid making turns by a series of jerks by improper use of steering brakes. When making other than a pivot turn, use steering control lever intermittently with but slight pressure on brake pedal. This makes a more even turn and does not subject TracTracTor to sudden impacts.

Paragraphs are numbered to correspond with numbers shown on illustrations.

Operating Over an Obstruction

Para. Illust.

39 5 When running over a log or ditch bank, use steering clutches instead of engine clutch to slow TracTracTor. Both steering clutches may be released slightly until TracTracTor balances on top of obstruction. Then engage one clutch gradually so TracTracTor moves forward at an angle, over and down. If load is light, it might be necessary to use brakes.

Steering Down Grade

40 5 Going down grade with TracTracTor pulling the load, steering is in the usual manner. If the "load is pushing the TracTracTor" steering clutch operation is reversed. Under such conditions to turn to the right, release left hand steering clutch, but do not apply brake. The left hand track will then travel faster while the right hand is retarded by the engine, which acts as a brake.

Steering Brake Lock

41 5 The right hand brake pedal is provided with locking lever device. This is operated by a pull button on the dash or instrument panel.

To operate, push right foot brake pedal down and pull button out which causes dog to act on ratchet, locking the brake pedal.

To release, press down slightly on right foot pedal and push in on button; then release brake pedal.

To Stop The Tractractor

42 5, 6 Disengage the clutch by pushing forward on clutch lever and move gear shifting lever to neutral position. Use the brakes if necessary.

To Stop The Engine When on Diesel Fuel

43 5 Set engine speed control hand lever in stop position (nearest the operator) and engine will stop.

Power Take-Off (Special)
Belt Pulley Attachment (Special)

44 ... The belt pulley, also the power take-off shaft when used, are operated by a lever located directly in front of the operator and partly under the fuel tank.

General Engine Lubrication

(Also see "Lubrication Chart")

Engine cylinders and pistons are lubricated by splash. Connecting rods, crankshaft bearings, camshaft, piston pin and valve rocker arms are lubricated with an oil pump pressure circulating system.

Drain the engine oil completely after every 60 hours' run *except when TracTracTors are operating in very dusty or extremely dry soil, in which case the oil in the crankcase should be completely changed more often, once a day if necessary.* Remove the drain plug, located in the bottom of the crankcase sump for this purpose. The oil strainer screen in governor housing should be removed occasionally and cleaned.

See "Lubrication Chart" for additional information.

The oil must be poured into the crankcase sump through an opening for this purpose located on the governor housing at the front of the engine. An oil level gauge located in the side of the crankcase is used to indicate the level of the oil. The oil should be kept up to the full level mark.

Oil Pressure Indicator

The pointer in oil pressure indicator (unless defective) should register at all times when the engine is running. Should the indicator not register, it is an indication that the oil pump is not performing properly or the oil supply needs renewing. The engine should be stopped immediately and the oil system inspected to find the cause of failure.

Oil Pump Screen

The plate on bottom of crankcase pan can be removed to facilitate cleaning oil pump screen.

Lubricating Oil Pressure Regulator

The oil pressure regulator is mounted in the oil filter base and is set to operate between 25 and 30 lbs. (when engine is hot). *This is set at the factory and no adjustment should be necessary.*

Cold Weather Operation

If TracTracTor is to be operated when temperature is below 32° F., certain protective precautions are necessary.

Use "Winter" engine, transmission and track roller lubricants. *(See "Lubrication Chart").*
Use kerosene in magneto coupling.

Transmission oil must be light enough to flow in prevailing atmosphere temperature. If transmission lubricant available is too heavy dilute sufficiently with lighter oil so it will flow readily.

Failure of transmission lubricant to flow readily will soon cause bearings to be without oil.

Engine Starting

For starting engines during cold weather it is important that engine be kept in the best possible mechanical condition. It is advisable to remove the spark plugs and make sure they are dry, and at the same time check the spark gap.

Use a good grade of engine oil having the proper body, with a low cold test, suitable for existing climatic conditions.

Have oil in engine crankcase light enough that engine will not be too stiff to crank.

If desired, during very cold weather, the engine oil in the crankcase pan can be completely drained each night. Do this while the oil is warm so it will drain freely.

Before refilling, warm oil thoroughly and pour into crankcase just before starting the engine, as this will insure oil thin enough to pass through screen over pump section, also prevents condensation of moisture in crankcase pan.

Prime intake manifold with gasoline, using 4 or 5 strokes of the primer. The number of strokes will depend on operating temperatures.

Use a good grade of winter gasoline for starting.

Filling the fuel tank at end of day's run will prevent moisture from collecting in the tank.

If engine has been idle for any length of time check crankcase pan, fuel tank and fuel bowl for any ice formation before starting.

Also see Magneto Instructions for further information.

If trouble is experienced see "Corrective Measures" on page 44.

Storing and Housing

When a TracTracTor is not to be used for a period of time, it should be stored in a dry and protected place. To leave a TracTracTor stand in an open field or yard exposed to rain and snow, will result in materially shortening the life of the TracTracTor.

When Diesel engines are to be out of service for an extended period of time, the I H C Service Station should be consulted for the necessary instructions for handling engines in storage.

Cold Weather Operation - Continued

Tracks Frozen To Ground

Should TracTracTor be left out during cold weather and tracks are frozen to ground, do not attempt to jerk tracks loose with power of engine. Loosen the tracks before starting TracTracTor.

Operating In Water Or Snow

If TracTracTor is operating in deep water or in snow that is in a thawing condition, lubricate track rollers every five hours. This will flush out water that might be forced past seals into lubricants. If operating in water of a depth that bottom of transmission case is submerged, inspect transmission lubricant in transmission case and drive gear sprocket cases frequently. If any water is present, drain and refill with new oil.

Note:- When operating in water or under very wet conditions where water is apt to come up to level of drain plugs on engine clutch compartment, rear main frame or steering clutch compartment, these plugs, having cotters, should be removed and replaced with solid plugs, which have no holes or cotters. Occasionally remove plugs to allow any oil accumulation to drain out.

Water System

When temperature is apt to be 32 F. or lower, there is always danger of water freezing in cooling system. To avoid such consequences, there is one simple precaution to practice.

Drain water from the cooling system at the end of every run.

To Drain Water System *(See Illustration No. 1).*

Remove radiator drain cap.
Open drain cock in water pump body.
Open pet cock on crankcase side.
See that drain cocks are not plugged and that water drains completely.

Important:-

When filling radiator in freezing weather, adjust radiator curtain to cover entire radiator. Start engine - then put in water immediately. This prevents water from freezing during warming up period.

When engine is operating adjust height of radiator curtain to maintain operating temperature of engine.

Anti Freezing Solutions

% By Volume	Distilled Glycerine			Ethylene Glycol (Prestone)		
	Freezing Point		Specific Gravity	Freezing Point		Specific Gravity
	°C	°F		°C	°F	
0%	0	32	1.000	0	32	1.000
10%	-2	29	1.029	-3	26	1.016
20%	-6	21	1.057	-9	16	1.031
30%	-11	12	1.085	-16	3	1.045
40%	-18	0	1.112	-24	-11	1.058
50%	-26	-15	1.140	-35	-31	1.070

Important!

Alcohol should not be used as an anti-freeze solution as it will not prove satisfactory.

Do not use a solution of calcium chloride or any alkaline solution as they are injurious to the metal parts.

LINCOLN TYPE LUBRICATING SYSTEM

To Fill Lubricating Gun

See "Lubrication Chart" for Approved Lubricant.

Use Clean Lubricant Only.

1. Unscrew cap casting from tube. Fill cap casting with lubricant, flush to the bottom side of the tube threads. Be sure there are no air pockets.

2. Insert open end of tube into can of grease, draw back on follower rod, pushing the tube into the grease. Do this slowly so as to give grease a chance to fill the tube. When follower rod is pulled out as far as possible, turn the follower rod so that swedged ears on rod will prevent it from forcing the grease from the tube.

3. Screw tube into cap casting tightly and release follower rod. A few strokes of the plunger and gun is ready for use.

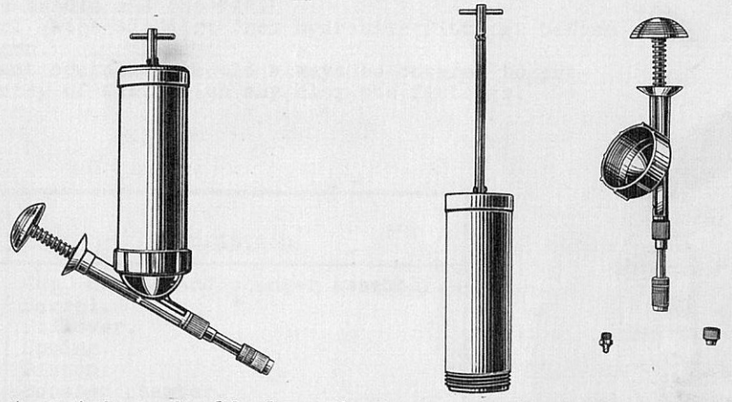

Lubricant container should always be kept covered to prevent entry of dirt or dust which may clog the fittings.

General Instructions

The Needle Nozzle of the Lincoln KLEENSEAL Grease Gun is designed for use with Lincoln KLEENSEAL fittings and works effectively on other fittings. An effective seal is maintained between the fitting and the nozzle by merely holding the nozzle against the fitting with the needle engaged in the fitting hole.

Should the small hole in the needle become clogged, remove nozzle cap. Withdraw the needle from the flexible packing and reverse it so that the pointed end is entered in the hole of the packing. Screw the nozzle cap in place and then operate the handle of the gun. This action will wash out any grit or foreign matter that may be obstructing the hole. After lubricant is pumped freely, remove the nozzle cap and reverse needle to original position.

Should the grease continue to flow from the nozzle when the pump is not in operation, it is an indication that foreign material has accumulated beneath the ball check preventing it from finding its seat. To remedy, remove nozzle bap, or in case of an extension, remove extension adapter at the pump casting, withdraw needle packing, check spring and ball, clean ball and ball seat, then replace parts.

NOTE: When Lincoln Lubricating gun is used, the following numbers, wherever used, should be changed to the Lincoln Number.

Alemite	Lincoln
27051 D	Q 3612
13129 DA	Q 3621
14186 DA	Q 3615
14187 DA	Q 3625
HA 59603	Q 3626
19175 CA	Q 3628

Alemite Hydraulic Lubrication System

To Fill Compressor (Hand Gun)

Unscrew and remove cap "A", together with handle and plunger assembly, from barrel "B". Fill barrel to within 3/4" of top with approved lubricant. (See "Lubrication Chart.")
Pack lubricant carefully to avoid air pockets.
Do not tap gun on metal or hard substance as coupling may be injured.
Replace handle and cap "A".
Caution! Wipe all dirt from hydraulic fittings before using gun.
Lubricant container should always be covered to prevent entry of dirt which may clog the fittings.

Ref. Letter	Description
A	Cap, handle and plunger assembly.
B	Barrel.
C	Follower.
D	Spring.
E	Piston.
F	Booster chamber.
G	Coupling.

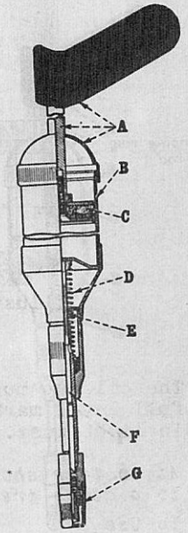

Illustration No. 7

Instructions for Use

Place coupling "G" onto the fitting.
Push handle "A" in a forward stroke against the fitting; then release hand pressure. If no lubricant is delivered, it is usually due to air pockets. Tap the coupling on a piece of wood to eliminate this condition.
To remove gun from fitting, pull the gun to one side. This breaks the contact between coupling and fitting, and the gun can be easily removed. Where clearance is not sufficient to enable operator to pull gun to one side, the gun can be removed by pushing gun to bottom of stroke and immediately releasing grip and gun will automatically be removed.
This gun should be used from a "straight on" position, but will operate satisfactorily at an angle not exceeding 15°.

Air Cleaning System

The engine is equipped with a Donaldson Air Cleaner with oil cup.

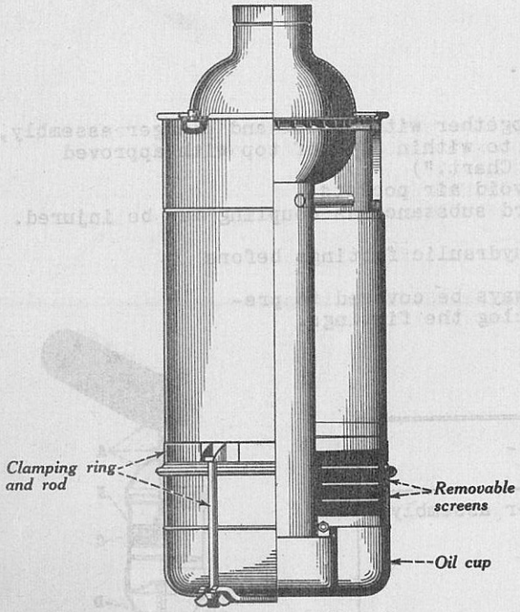

Illustration No. 8

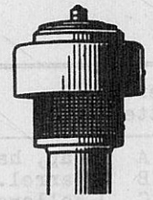

Illustration No. 8A
Inlet pipe screen.

The oil cup must be removed, cleaned and refilled with oil daily to full level mark. Cleaning may be extended to 30 hours when operating in light dust.

At no time should dirt be allowed to accumulate in bottom of oil cup to a depth greater than 3/4".

Oil To Use

Use SAE No. 20 or lighter oil. Drained crankcase oil may be used in the oil cup if it is screened, cleaned and allowed to settle in order to remove all dirt and sediment. *Oil drained from a Diesel engine must never be used.*

Oil should be added to keep to full level mark on oil cup.

Air Intake Pipe Screen

The air intake pipe is provided with an inlet screen to prevent large particles, such as chaff, leaves, etc., from entering the air cleaner.

Keep this inlet screen clean. The holes must be kept open and free of paint, as enough dust, oil or water may collect on the screen to clog up the holes enough to restrict the flow of air to the engine thereby interfering with the cleaning action of the air cleaner. Restricted air flow will also cut down on the horse power delivered by the engine.

The air intake pipe from inlet screen to the air cleaner should not be allowed to collect dirt on the inside. Remove and clean this pipe when air cleaner is removed; at the same time, clean inlet tube through air cleaner and inlet passage through the funnel shaped air intake pipe base and back-fire baffles.

Air Cleaning System - Continued

Washing Cleaner

The complete air cleaner must be removed and washed thoroughly at intervals frequent enough to insure clean elements. Under very dusty conditions it may be necessary to remove cleaner as often as every 40 to 50 hours of operation.

Remove the nuts or capscrews at top of cleaner. Be careful not to injure the gasket when separating the funnel shaped air intake pipe base from the air cleaner body, or the gasket at air pipe leading to carburetor. Remove oil cup and at the same time, inspect the removable screens in the lower end of the cleaner to make sure they are not plugged. If they have an appearance of being plugged, they should be removed and cleaned. This can be done by loosening the clamping ring and pulling the screen down. Scrape and clean out all dirt in center inlet tube; partially fill cleaner with kerosene, stop up both ends of cleaner and shake thoroughly until all dirt is removed. (The cleaner can also be cleaned by shaking it in a container of kerosene). Replace air pipe to carburetor. Make sure gaskets are in place, clean, flat and in good condition. Check bolts to see that they are tight. Assemble top air pipe. Replace oil cup after filling to proper level with specified oil.

General Precautions

To prevent the entrance of dirt into the engine, it is absolutely essential that frequent inspections be made of flexible rubber connections to the carburetor and air cleaner. Flexible connections should be replaced before they deteriorate. To eliminate any undue strain on the connections, make sure pipe lines up. See that all joints between the air cleaner and the cylinders of the engine are tight, this includes flexible connections, carburetor and manifold joints and gaskets. All gaskets must be in good condition and bolts drawn up tight.

Care of Oil Filter and (Metal) Element

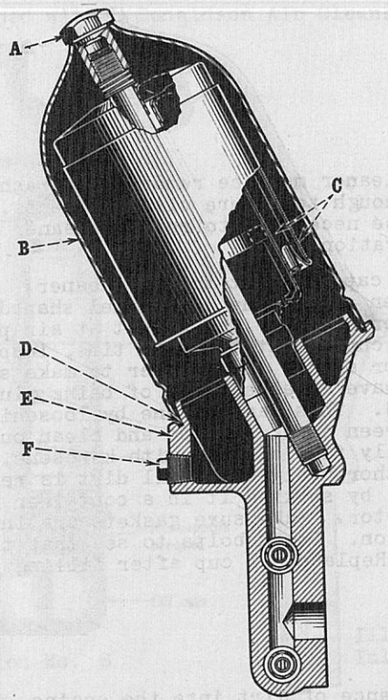

Illustration No. 9.

The Oil Filter performs the very essential function of filtering the lubricating oil in the crankcase of the engine continuously as the TracTracTor runs, keeping the oil free from all dirt and abrasive matter. The dirt filtered from the oil is deposited in the filter. It is, therefore, necessary the *oil filter be cleaned daily.*

Stop engine.

Remove drain plug "F", which will allow the Oil Filter to drain, then replace drain plug tight.

Unscrew and remove retaining nut "A".

Lift up and remove outer shell "B".

The element "C" can now be removed.

In some cases where clearance is small, it may be necessary to lift the outer shell and metal element together in order to remove.

Wash metal element in clean kerosene, using soft brush or cloth.

See that the case gasket "D" is in position, then replace the drain plug, filter element, case, retaining nut, and draw the nut up tight.

Now start up the engine, inspect the filter for oil leaks and check the oil level in crankcase.

(See "Lubrication Chart").

Cleaning Fuel Oil Filter inside Fuel Supply Tank

The fuel oil supply tank strainer, inside the filler hole in fuel tank, should be removed and *cleaned in kerosene once a week;* to do this, remove the filler cap and lift out the screen. It may be necessary to turn screen slightly to remove it. After cleaning, screen should be reassembled.

Cleaning Fuel Oil Filter at Injection Pump

The fuel oil filter at the injection pump should be taken apart and *cleaned daily;* to do this, close fuel shut-off valve under fuel tank and open drain cock "H" in filter case side and drain off some of the oil. Then unscrew nut "A" on top of filter. This permits the filter case and element to be removed.

Unscrew nut "B". The metal tube strainer "C", together with the cloth (element) strainer "D", should be separated. Flush the metal strainer with kerosene to remove all sediment. Wash the cloth element in kerosene. Rinse cloth element up and down in the kerosene (like an accordian) until clean. Inspect for any breaks in cloth element; if broken, replace with new element. Flush out the filter case with fuel or kerosene.

Reassemble elements and tighten with nut "B" (by hand). Then, with gasket "E" clean and in its proper place, reassemble the case and elements to the top and secure with top nut "A". Gasket "F" must be in place. Pull this nut up tight with a wrench and close case drain cock.

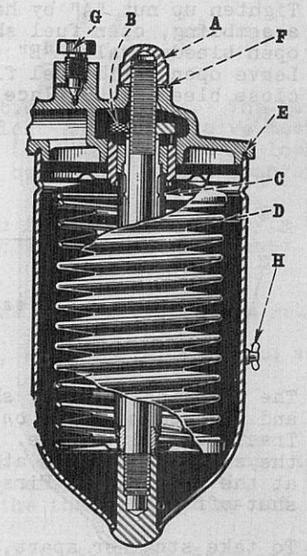

Illustration No. 10

After reassembling, open fuel shut-off valve, then open bleeder valve "G" to vent any air. Leave open until fuel flows through, then close bleeder.

For satisfactory operation, we recommend the use of Clean Fuel. Fuel must be strained through a cloth before filling fuel tanks.

Cleaning Fuel Oil Water Trap

The fuel oil water trap, located under the fuel tank, should be taken apart and *cleaned at least once a week.* To do this, remove the fuel tank side plate (left hand). Close fuel shut-off valve under tank. Loosen thumb nut (or screw) "A" under water bowl. Raise up bail and swing to rear. Then remove the glass bowl. Unscrew nut "B" and remove screen "C". If screen is dirty, wash screen and glass bowl in kerosene to remove all dirt and sediment. Reassemble screen and nut "B", then glass bowl and bail. Gasket "D" must be in its proper place and in good condition. Tighten up nut "A" by hand. After reassembling, open fuel shut-off valve, then open bleeder valve "E" to vent any air. Leave open until fuel flows through, then close bleeder. Replace side plate.

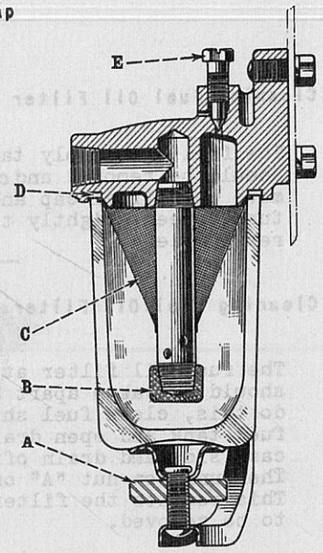

Illustration No. 11

Cleaning The Gasoline Strainer

The gasoline strainer should be taken apart and cleaned *at least once a week* when TracTracTor is in use. This applies whether the strainer is used at the fuel pump or at the fuel tank. First close the gas shut-off valve.

To take strainer apart, loosen the lower jam nut (C) and swing the bail wire (B) to one side. Glass bowl (A) can then be lowered, removed and cleaned.

Note condition of screen and if it is not corroded or clogged with dirt it is not necessary to remove it.

In reassembling the gasoline strainer, be sure that cork gasket between the bowl and main body is in good condition and does not leak.

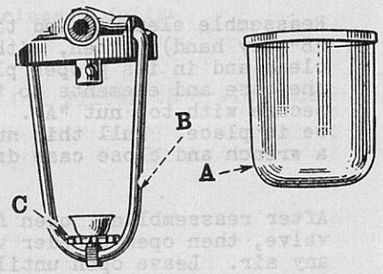

Illustration No. 12

Gasoline Strainer showing Glass Bowl removed for cleaning.

Diesel Starting Carburetor-Updraft

1-1/4" - Model C-12 (35690D)

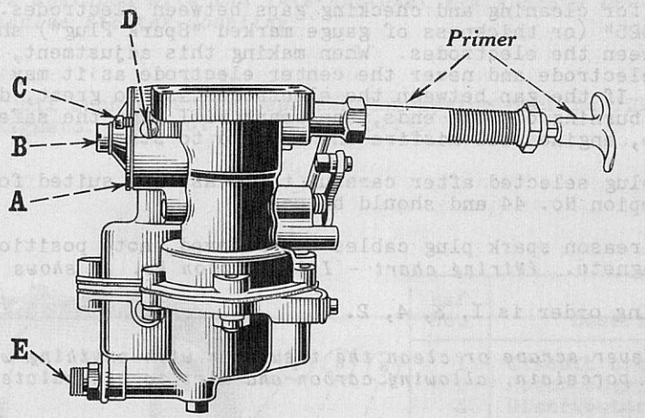

Illustration No. 13

The "C-12" Carburetor is used only when starting the engine. The gasoline level is controlled by a conventional float and float valve mechanism when starting and running on gasoline. The float valve is locked into its seat, shutting off gasoline to fuel bowl when engine changes over to operate on Diesel.

The float valve is protected against dirt and foreign material by a strainer. This strainer should be removed occasionally and cleaned.

To Clean Strainer - *(See Illustration No. 13)*

Close gasoline shut-off valve on gasoline tank *(See Illustration No. 5)*.
Disconnect gasoline pipe at carburetor.
Unscrew strainer fitting "E" from carburetor, wash off in kerosene and reassemble.
Open gasoline shut-off valve.

Carburetor

The throttle shaft is so located that when the air passing through the carburetor reaches a certain speed, the air pressure against the throttle butterfly overcomes the tension of the throttle spring and closes the throttle.

The throttle lever comes in contact with the idle throttle stop screw "D" after throttle closes; the position of this stop screw then controls the engine speed.

The starting choke regulates the air for starting.

Adjustment - (In case Carburetor has been disturbed)

To Adjust Idle Speed - *(See Illustration No. 13)*

Loosening idle throttle lock screw "C" and turning out idle throttle stop screw "D" reduces speed of engine.

Note:- In cold weather the idle throttle screw should be readjusted to get correct idling speed. Engine speed when operating on gasoline should not exceed 800 RPM.

Present day grade of gasoline has a tendency to form gum; therefore, it is necessary that gasoline tank and fuel bowl be completely drained of fuel when engine is to be out of service for more than 2 weeks.

Spark Plugs and Cables

Spark plugs should be removed every 200 to 300 hours or oftener, if necessary, for cleaning and checking gaps between electrodes. A gap of .020" to .025" (or thickness of gauge marked "Spark Plug") should be maintained between the electrodes. When making this adjustment, always bend the outer electrode and never the center electrode as it may damage the insulator. If the gap between the electrodes is too great, due to improper setting or burning off the ends, the spark will jump the safety gap in the magneto, engine will misfire and be hard to start.

The spark plug selected after careful tests as best suited for this engine is the Champion No. 44 and should be used.

If for any reason spark plug cables are removed, note position of each cable on magneto. *(Wiring chart - Illustration No. 14 shows correct wiring).*

Engine firing order is 1, 3, 4, 2.

CAUTION: Never scrape or clean the insulator with anything which will scratch the porcelain, allowing carbon and dirt to accumulate much faster.

Engine Ignition

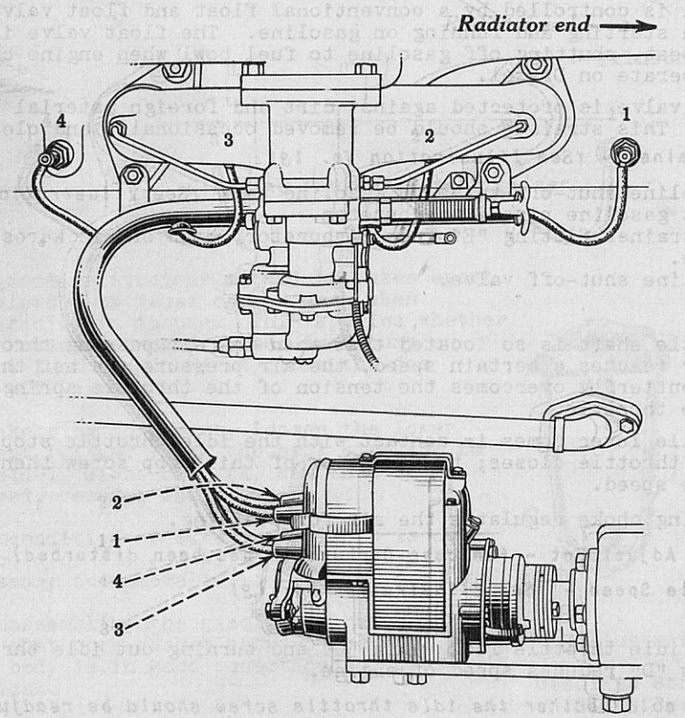

Illustration No. 14.
F-4 Wiring Chart.

Ecartement aux bougies : 0,60 m

Magneto

The engine is equipped with the International F-4 Magneto with Automatic Impulse Starter Coupling

Lubrication

A very light oil such as Cream Separator or Sewing Machine Oil should be used in Magneto. *"Do not use Engine Oil".*

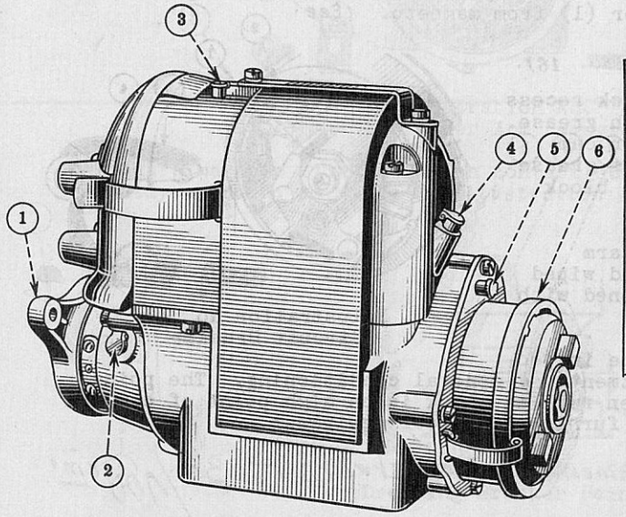

Ref. No.	Description
1	Circuit breaker cover.
2	Rotor bearing oil cup.
3	Distributor bearing oil cup.
4	Rotor bearing oil cup.
5	Impulse coupling oil cup.
6	Impulse coupling oil hole (remove cover).

Illustration No. 15

After every 50 hours of operation, lubricate the following places:-

Rotor bearings - - - - - - - - - - -	Two drops in each cup.
Impulse coupling oil cup - - - - -	One-half teaspoonful or more.
Impulse coupling oil hole (under coupoing cover)- - - - -	Twenty drops (one spoonful). Squirt forcibly in oil hole at least 3 or 4 shots from a full oil can, also oil the pawl pins and hook on catch plate through oil cup. The impulse coupling cannot be over-oiled.

In cold weather, use kerosene in impulse coupling.

After 400 to 500 hours operation fill (3) distributor bearing oil cup once.

When engine has been idle more than three months, fill (2) and (4) rotor bearing oil cups twice and impulse coupling (5) and (6), liberally.

Magneto - Continued

Magneto Grease

The best lubricant for the breaker is long-lived I H C magneto grease, a tube of which is furnished in the tool box. *See your I H C dealer for a further supply.*

Such grease supplies adequate lubrication for a longer period than oil and does not form a mist in the breaker housing which causes rapid breaker point wear. The cam felt wipes off the excess grease. This same grease should be used in the rotor ball bearings when the magneto is overhauled.

Lubricate breaker assembly after every 400 to 500 hours of operation. Remove circuit breaker cover (1) from magneto. *(See (See Illustration No. 15).*

To Grease - *(See Illustration No. 16).*

Remove breaker arm (3). Pack recess in breaker arm post (2) with grease. Pack small grease pocket for cam (1). Pack small quantity of grease back of breaker arm rubbing block (4).

To prevent rusting breaker arm spring should be cleaned and wiped with a piece of cloth dampened with oil.

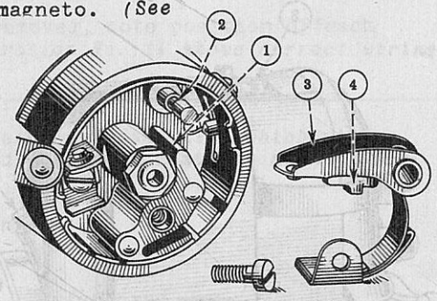

Illustration No. 16
Circuit Breaker

The breaker points should be inspected occasionally for adjustment and general conditioning. The point opening should be .013" when rubbing block is on high point of cam. A gauge of this thickness is furnished in tool equipment.

To Adjust Points

écartement des contacts : 33/100 cm

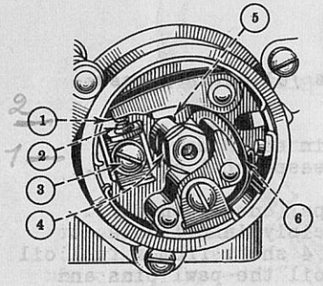

Illustration No. 17
Adjusting Breaker Points

Ref. No.	Description
1	Adjustable breaker point.
2	Breaker arm point.
3	Point support screw.
4	Cam.
5	Rubbing block.
6	Breaker arm spring.

Remove circuit breaker cover (1). *(See Illustration No. 15).* Crank engine until rubbing block (5) *(See Illustration No. 17)* is on the high point of the cam.

Insert gauge between breaker points (1) and (2). If points are too wide or too close, loosen screw (3) slightly. Adjust so gauge will slip snugly in opening. Tighten screw (3) and recheck opening. *(Use screw driver as a pry to move point support).*

Magneto - Continued

If Points are Rough Or Pitted

Remove adjustable point (1).
Remove breaker arm with point (2).

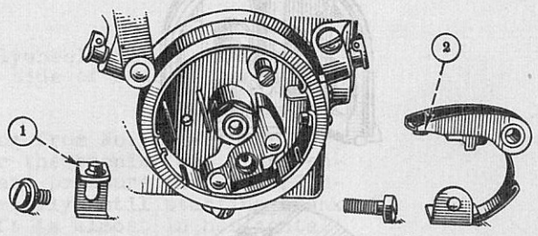

Illustration No. 18
Breaker Arm Removed

Use sharp magneto file to polish contact surfaces. One point should be slightly rounded, *as shown in illustration No. 19.*

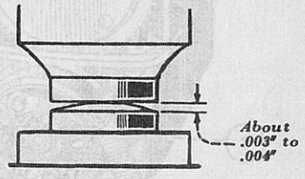

Bombé sur 1 contact

Illustration No. 19
Dressing Breaker Points.

Replace And Adjust

Rubbing surface of cam should always be free from dirt and slightly grease coated to prevent excessive wear of breaker arm rubbing block.

Caution:- When servicing the breaker mechanism, unusual care should be exercised to prevent the entrance of dust. Long breaker life is assured if the parts are kept clean and well greased.

Impulse Coupling

If coupling does not operate or becomes sluggish, remove coupling drive cover. Flush with kerosene through coupling oil hole (6) *(See Illustration No. 15).* Refill with light oil. If coupling still fails to operate, it should be repaired.

The coupling cover must always be in place to exclude water and dirt.

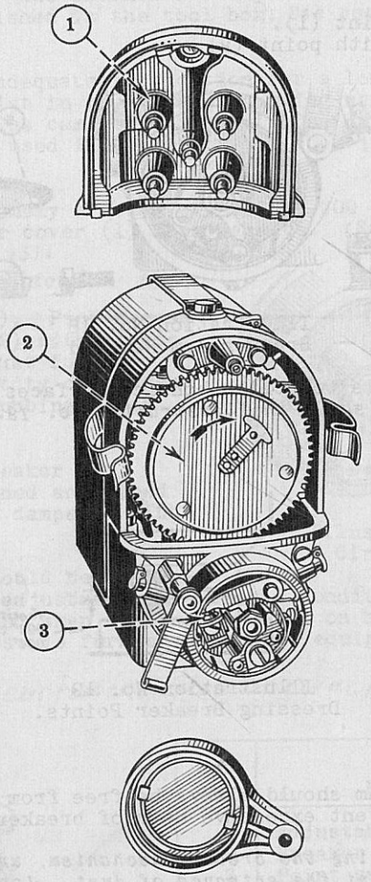

Illustration No. 20

Distributor

Remove the distributor block, *as shown in Illustration No.20,* after 200 or 300 hours of operation.

Clean inside of block (1) and face of distributor disc (2) with a cloth moistened with kerosene; then wipe dry with a clean cloth. The brushes should be inspected to see that they are in good condition and move freely in their guides *(See Illustration No. 20).* If the brushes are allowed to stick in their guides, they will arc and form a green corrosion on the brass parts.

Caution: Be careful not to damage carbon brushes.

It is advisable that once a year magneto be cleaned and overhauled at a McCormick-Deering or International Dealer Service Station.

If the magneto is removed for any reason, the following instructions must be closely followed in replacing the magneto on the engine.

Timing the Magneto

Engine
Remove engine flywheel timing mark cover located on left side of rear engine support plate.

Remove spark plug from No. 1 cylinder. Place thumb over the opening and crank engine until outward pressure is felt. Continue cranking slowly until starting crank pin in crankshaft is almost in horizontal position.

The D.C. mark on flywheel is then near timing pin. Crank very slowly until D.C. mark is in line with pin, *as shown in Illustration No. 21.*

No. 1 piston is then on upper dead center of compression stroke.

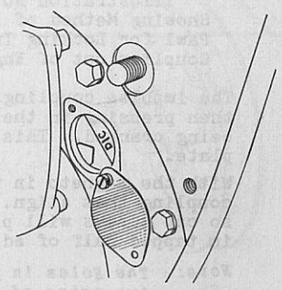

Illustration No. 21
Engine Timing Mark.

Magneto
Fully retard the spark by raising the breaker housing cover as high as it will go. To do this, remove nut "A" and link "B", *as shown in Illustration No.22,* then carefully remove the breaker housing cover so as to avoid moving the breaker cam.

Rotate magneto clockwise (as viewed from coupling end) until rubbing block in breaker assembly is on high point of cam. Check or adjust point opening to proper setting .013".

Assemble magneto and drive coupling parts on engine bracket. Insert magneto base screws loosely in the magneto. *Note: Do not use screws longer than originals as they will damage magneto.*

Remove distributor block, then grasp and rotate magneto clockwise at coupling end until the segment in distributor disc is under the distributor block brush marked (1) and breaker points (3) are just beginning to open. *(See Illustration No. 20).*

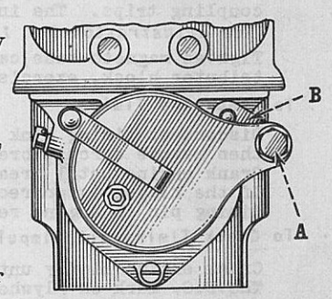

Illustration No. 22.
Breaker Housing Cover
With Timing Link.

Magneto - Continued

Timing the Magneto - Continued

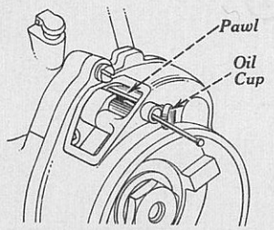

Illustration No. 23
Showing Method of Lifting Pawl for Locking Impulse Coupling out of Engagement

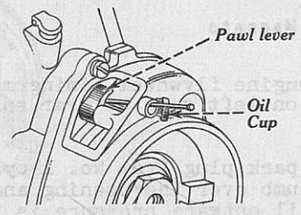

Illustration No. 24
Showing Method of Lifting Latch to Re-engage Impulse Coupling

The impulse coupling can be disengaged by first removing coupling cover, then pressing in the leading end of the top pawl while the engine is being cranked. This prevents this pawl from engaging with the catch plate.

With the magneto in this position, locate the two holes in adjustment coupling that align. Insert shims between the two halves of coupling so cap screws will pass through the holes in shims and enter the holes in tapped half of adjustment coupling.

Note: The Holes in the adjustment coupling are so spaced that only two pairs of holes will line up exactly. Do not force the cap screws as the setting will be incorrect.

With the impulse coupling engaged, crank the engine until No. 1 piston is coming up on the compression stroke. Continue to crank the engine slowly, watching to see that mark on the coupling member is at the center of the oil cup (5) or the impulse coupling plate when the impulse coupling trips. The inpulse coupling cover should then be replaced. *(See Illustration No. 15).*

Tighten magneto base cap screws. Replace circuit breaker cover and distributor block, exercising care not to damage the brushes.

To Check The Timing

Disconnect timing link to fully retard spark *(See Illustration No. 22).* then remove circuit breaker cover.
Crank engine until breaker points are just beginning to open.
If the timing is correct, the D.C. mark on flywheel will align with timing pin in engine rear support plate. *(See Illustration No. 21).*

To Check Timing With Impulse Engaged

Crank engine slowly until impulse trips.
The D.C. mark on flywheel should be in line, or not more than 8° below (25/32" on flywheel rim) and never above the timing pin on engine support plate.

Engine firing order is 1, 3, 4, 2 beginning at radiator end of engine.

Replace the distributor block and breaker housing cover, together with timing link, exercising care not to damage the distributor block brushes.

Attach spark plug cables to engine and magneto. Start by connecting No. 1 cylinder spark plug to socket marked "1" on distributor block. Advancing clockwise on distributor block, connect next socket with No. 3 cylinder, next with No. 4 cylinder, next with No. 2 cylinder *(See Magneto Wiring Diagram Illustration No. 14).*

Be sure the cable terminals are pushed all the way into the distributor block sockets and make good contact, otherwise a green coating will form in the hole.

The magneto is now correctly wired and timed.

Engine Hard To Start

If the engine has been standing idle for a long time in a damp atmosphere, it may be hard to start due to a wax-like coating that forms on the breaker points. This should be wiped off with a moist cloth, leaving the contact points bright. If engine still does not start, *see "Corrective Measures " on page 44.*

Valve Clearance Adjustment

Jeux aux soupapes: 46/100mm

Check valves for clearance every 400 hours and adjust if necessary.

Clearance of .018" is necessary between end of valve levers and valve stems when valves are closed - when engine is warm.

To determine when valves are closed proceed as follows:

Remove spark plug from No. 1 cylinder which is next to radiator. Place thumb over the opening until an outward pressure can be felt which indicates No. 1 piston is moving toward upper dead center of compression stroke. Continue cranking until crank pin is in horizontal position, *as shown in Illustration No. 25.* Both valves are then closed on compression stroke of No. 1 cylinder. Check or adjust No. 1 valves. Crank engine 1/2 turn - crank pin horizontal. Check or adjust No. 3 valves. Crank engine 1/2 turn - crank pin horizontal. Check or adjust No. 4 valves. Crank engine 1/2 turn - crank pin horizontal. Check or adjust No. 2 valves.

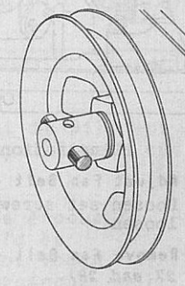

Illustration No. 25
Starting Crank Pin.

To Adjust Valves

Loosen lock nut.
Adjust screw in valve lever so gauge will snugly slip between end of valve lever and valve stem. Tighten lock nut and recheck for clearance with gauge. *(See Illustration No. 26).*

Improper valve clearance will result in hard starting, high fuel consumption, burnt valves and lack of power.

Crank Shaft And Connecting Rod Bearings

The work of adjusting or replacing of crankshaft or connecting rod bearings should be undertaken by an experienced mechanic in a properly equipped service station.

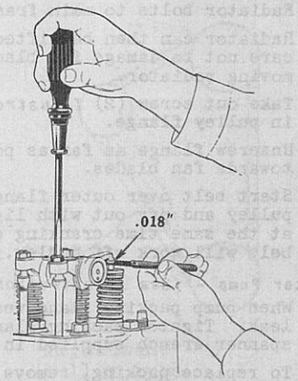

Illustration No.26
Gauging valve levers with a feeler gauge.

Cooling System

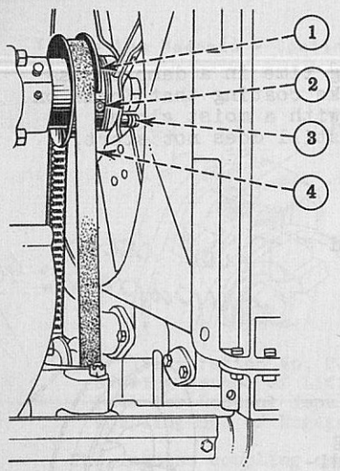

Ref. No.	Description
1	Fan pulley flange.
2	Set screw in pulley flange.
3	Water pump packing gland.
4	Fan belt.

Illustration No. 27

To Adjust Fan Belt - *(See Illustration No. 27)*

Loosen set screw (2). Screw pulley flange (1) in to tighten and out to loosen.

To Remove Fan Belt - *(See Illustrations Nos. 27 and 28).*

Loosen bolts of engine starting crank bearing to main frame, which will permit belt (4) to pass between starting crank and end of crankshaft.

Drain water system.

Remove hose connection at water pump (6).

Loosen or remove radiator.

Disconnect at points shown in Illustration No. 28, as follows-

Radiator inlet hose connection (5).
Radiator outlet hose connection (6).
Radiator bolts to main frame (7).

Radiator can then be lifted off. Use care not to damage fan blades when removing radiator.

Take out screw (2) *Illustration No. 27* in pulley flange.

Unscrew flange as far as possible towards fan blades.

Start belt over outer flange of lower pulley and pry out with light bar or rod, at the same time cranking engine. Fan belt will work off pulley.

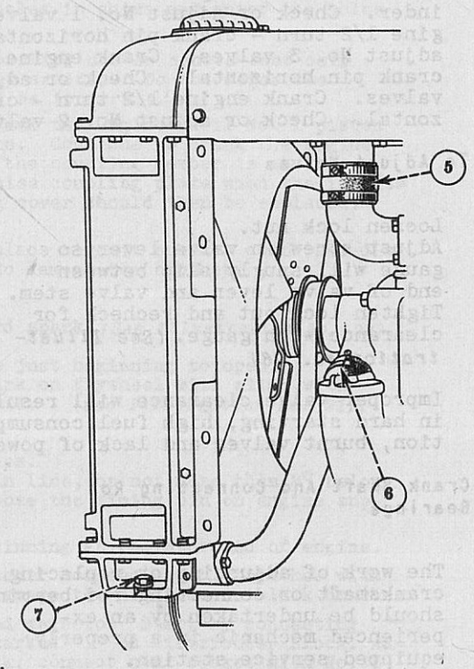

Illustration No. 28

Water Pump - *(See Illustration No. 27)*

When pump packing gland wears, it may leak. Tighten packing gland (3). Use spanner wrench supplied in tool equipment.

To replace packing, remove water pump, complete, and disassemble. It is recommended that the radiator be removed to gain free access to the pump.

To remove the pump, release set screws in outer flange of fan pulley and unscrew flange to relieve tension on belt. Loosen hose connections to the pump. The pump is attached to cylinder head with screws; remove the screws and the entire assembly can be lifted out.

To reassemble, reverse the above procedure.

Cooling System-Continued

To Adjust Fan Belt - Continued

A - Fan belts should be examined frequently to be sure proper tension is maintained.

B - "V" type belts, generally speaking, do not need as much tension as the flat type belt.

C - The proper tension is obtained when the belt can be depressed, without effort, by the thumb (between the two pulleys) approximately 3/4" to 1" depending, of course, on the length of belt between pulleys.

D - After a new belt is broken in (approximately 50 hours of operation) examine tension and adjust if necessary.

E - Care must be taken to have belt wide enough so that it will not draw down to the bottom of the "V" in pulley; this will wear out the belt.

Note:- If pulley, on which belt bottoms in the groove, is of the adjustable type, movable flange should be adjusted for narrower groove until belt does not touch bottom when proper tension (as explained in paragraph "C") is obtained.

F - *Do not have "V" type belts too tight.*

G - When belt becomes grease soaked, or so badly worn that it no longer gives side surface on the crankshaft pulley, but sinks down to the bottom of "V" in pulley, it should be replaced, as it no longer gives sufficient surface contact to drive fan at the proper speed.

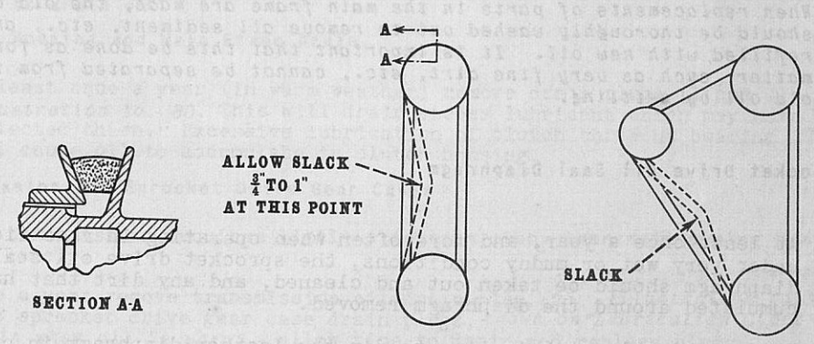

Flange type belt adjustment — Adjustment - 2 pulley type. — Adjustment - 3 pulley type.

Illustration No. 29

Cooling System-Continued

Radiator

Always use clean water.

Water from creeks and stagnant pools usually contains dirt or other matter that leaves a deposit in the system that may impair the cooling efficiency.

Radiator and water cooling systems should be cleaned occasionally.

To Clean

Drain system - *see page 4*

Fill radiator with a solution of 4 pounds ordinary washing soda with 10 gallons of water (water system capacity).
Leave radiator filler cap off and run engine until the water is hot, then drain and flush with clean water.

Radiator Core

Over-heating is often caused by clogged or bent radiator fins.

Spaces between radiator fins can be cleaned by use of an air or water hose.

Use care in straightening bent fins and cleaning so as not to injure tubes or break the bond of fins to tubes.

Radiator core with fins loose or broken from tubes will cause overheating.

Caution:- When engine is hot and water level is below top of tubes in radiator "do not pour cold water into system." This frequently causes cylinder head of engine to crack.

Oil-Main Frame-Replacements

When replacements of parts in the main frame are made, the old oil should be thoroughly washed out to remove all sediment, etc., and then refilled with new oil. It is important that this be done as foreign matter, such as very fine dirt, etc., cannot be separated from the old oil by settling.

Sprocket Drive Oil Seal Diaphragm

At least once a year, and more often when operating in rice fields or under very wet or muddy conditions, the sprocket drive oil seal diaphragm should be taken out and cleaned, and any dirt that has accumulated around the diaphragm removed.

It is advisable at this time to dip the leather diaphragm in oil.

If diaphragm, after continued use, is not in good condition, it should be replaced.

Do not keep leather diaphragm exposed to weather after cleaning.

Ref. No.	Description
1	Engine clutch compartment drain.
2	Transmission oil drain.
3	Steering clutch compartment drain.
4	Main frame rear drain.

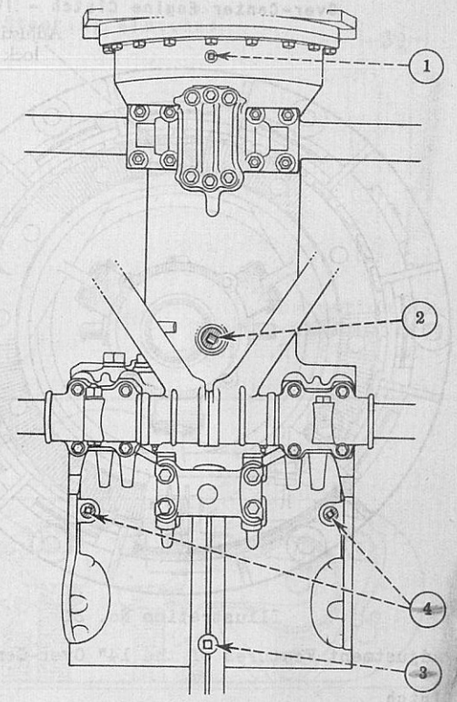

Illustration No. 30
Bottom of Main Frame.

Note:- When operating in water or under very wet conditions where water is apt to come up to level of drain plugs on engine clutch compartment, rear main frame or steering clutch compartment, these plugs (having cotters) should be removed and replaced with solid plugs which have no holes or cotters. Occasionally remove plugs to allow any oil accumulation to drain out.

Clutch Housing And Main Frame Drain

At least once a year (in warm weather) remove drain plugs (1 and 4) *Illustration No. 30.* This will drain excess lubricant which may have collected there. Excessive lubrication of clutch throwout bearing will cause oil to accumulate in clutch housing.

Transmission And Sprocket Drive Gear Cases

The transmission requires little attention other than maintaining proper oil levels.

Once a year remove transmission oil drain plug (2) *Illustration No. 30.* also sprocket drive gear case drain plugs, *shown on "Lubrication Chart". "Drain when oil is warm",* allow time to drain and replace plugs. Then refill to proper level with approved lubricant.

To Wash Transmission

Fill transmission case and sprocket drive gear cases to proper level with kerosene. Operate TracTracTor in low gear for a few minutes.

Remove drain plugs, allow time for complete drainage of kerosene, then replace plugs and fill to proper levels with fresh lubricant. *See "Lubrication Chart".*

Over-Center Engine Clutch - 14"

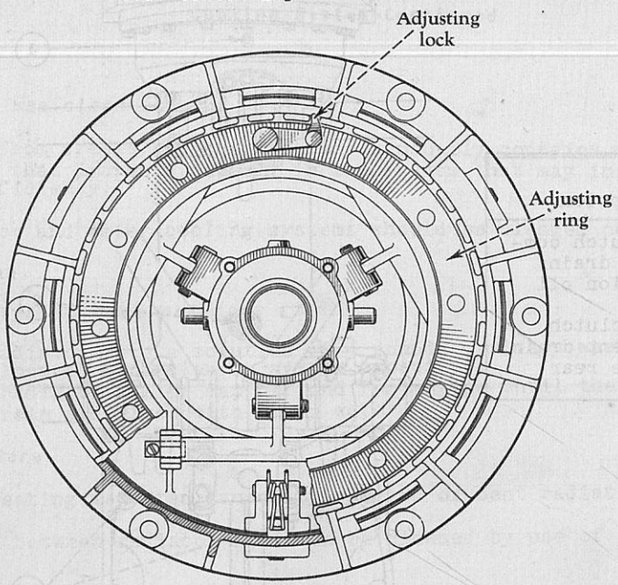

Illustration No. 31

Adjustment Features of the 14" Over-Center Clutch.

Care of the Clutch

The over-center clutch is so designed that it requires a minimum of attention. It is important, however, that the throw-out sleeve be kept properly lubricated. Follow the instructions given in *"Lubrication Chart"*.

Operation and Adjustment

1. Clutch is fully engaged when the clutch hand lever is pulled back all the way so that full over-center cam engagement is definitely felt.

2. The clutch needs adjusting only when any noticeable slippage is taking place with TracTracTor operating under load.

3. To adjust, remove clutch housing cover or hand hole cover

4. Release adjusting ring lock.

5. With clutch hand lever in disengaged position, turn the adjusting ring in a clockwise direction, moving it one notch, or possibly two notches at the most at any one time. Pull hand lever back as a check to determine if over-center engagement is felt.

If adjustment has been made as described above, and the cams are so tight that you do not get full over-center engagement, then the adjusting ring should be backed off one notch (in counter-clockwise direction).

For satisfactory operation of the clutch do not have the clutch adjusted so tight that this full over-center engagement is not easily secured.

6. When correct clutch adjustment is reached, be sure to engage the adjusting ring lock in notch on the adjusting ring.

The correct adjustment has been made when a considerable (not excessive) pressure is felt when pulling clutch hand operating lever back so that a definite over-center cam engagement is felt.

If little or no pressure is needed on end of hand lever to engage the clutch, then further adjustment, as outlined above, is necessary.

Steering Clutches

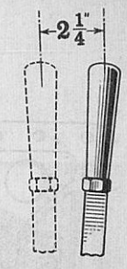

Illustration No. 32A
Showing maximum free movement of R.H. steering clutch handle.

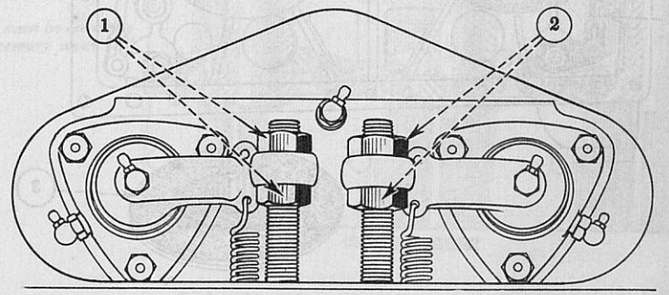

Illustration No. 32

Steering control levers should have a minimum of 2" free movement before clutches start to disengage. *See Illustration No. 32A* for measuring.

As clutch wears, this free movement decreases. Adjustment should be maintained to prevent damage to clutch parts.

To Adjust Clutches

Remove seat cushion. Adjust steering clutch rods (1) and (2) *Illustration No. 32,* to lengths that will provide proper free movement of steering control levers.

Steering Clutch Compartment Drain

About once a month remove drain plug (3), *Illustration No. 30,* to drain clutch compartment of any excess lubricant which may have collected there. Replace plug.

Steering Brakes

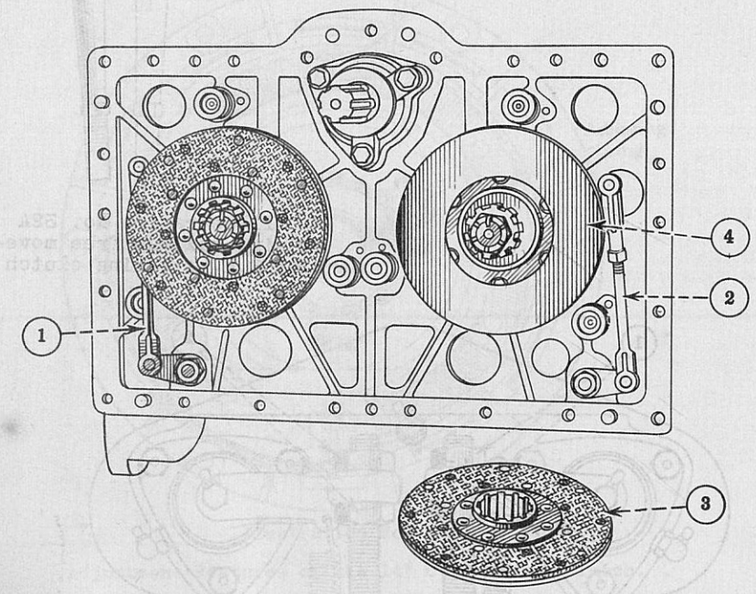

Illustration No. 33

Pedals should have at least 3" free movement from the rear of the slot in platform before engaging brake.

To Adjust Steering Brakes

Remove brake housing on main frame, rear.
Adjust brake rods (1 and 2), *Illustration No.33,* so pedals will have the free movement specified above.

Brake Lining Renewal

Remove brake housing, complete, *Illustration No.33,* Slip brake disc (3) off spline shaft.

To Assemble Brake Disc

Put long end of brake disc hub to the rear and adjust brake rod for free movement of foot pedal.

All joints in the brake rod should be kept free from dirt and oiled occasionally so that levers will operate freely.

Track Rollers

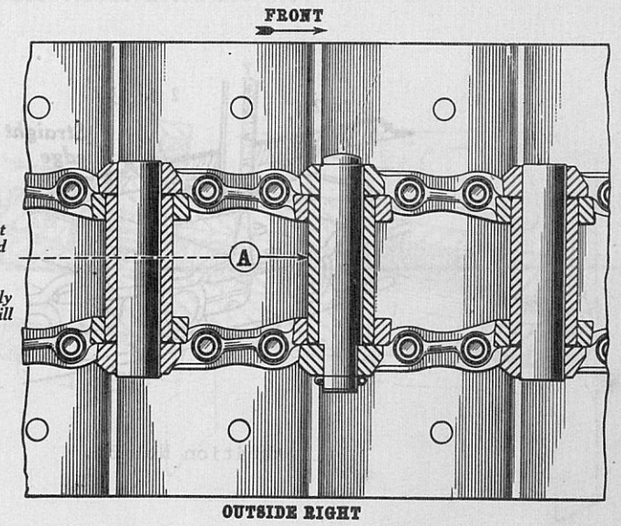

Note:—When installing track, bushing "A" must be toward front of TracTracTor when truck is laid out flat on ground as shown.

These instructions must be carefully observed or unnecessary wear will result.

Illustration No. 34.

It is important that track rollers have proper lubrication. Never use grease for lubricant. (See "Lubrication Chart" for information).

Track chain that is too loose will have tendency to climb drive sprocket when backing TracTracTor; track adjustment too tight causes undue wear on tracks and front idler bearings.

To Adjust - *(See Illustration No. 36).*

Loosen bolt (1) in track spring retainer. Remove cap screws (2). Turn adjusting flange (3) clockwise. This pushes front idler yoke (4) forward, tightening track chain. Turn adjusting flange (3) counter-clockwise to loosen track chain.

Proper Adjustment of Track is Measured as Follows-

Place a straight edge along the top of track lugs, the full length of chain, between front and top idlers. Chain should have a clearance of approximately 2" to 2-1/4" between the underside of straight edge and top of lug, measured at center between supports on chain *(See Illustration No.35).* After this adjustment has been obtained, replace cap screws (2) which hold adjusting flange (3) to front idler yoke (4). Tighten bolt (1) in track spring retainer. *(See Illustration No.36).* After track chain has been thoroughly broken in it is well to check clearance.

Should track be removed, when replacing, the end with master bushing (1) must be toward front of TracTracTor, *as shown in Illustration No. 34.* The bushing (1) must be in place when connecting track links.

TRACK ROLLERS - Continued.

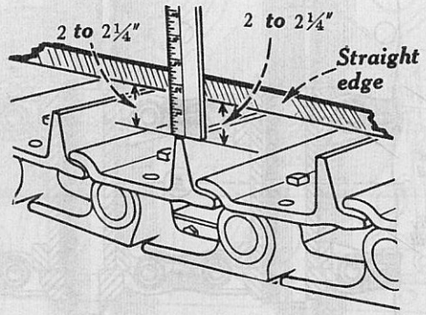

Illustration No. 35.

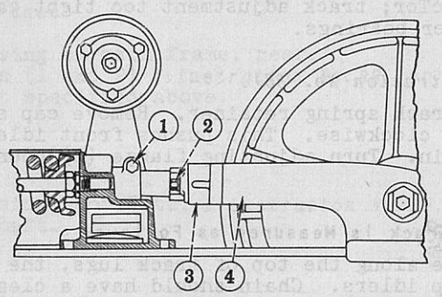

Illustration No. 36.

Injection Nozzle and Pre-Chamber

If one cylinder seems to fire unduly noisily, it usually is an indication that the injection nozzle check valve "M" is leaking badly. Remove nozzle and disassemble. A leaky valve will generally appear black. Clean the valve and seat. *(See illustration No. 37.)*

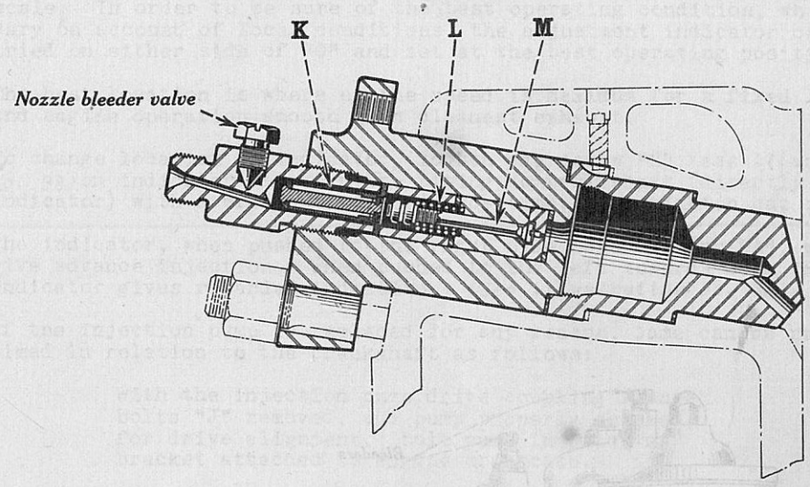

Illustration No. 37.

Injection Nozzle (sectional view).

Before injection nozzle check valve is disassembled, it is advisable to check the length of each valve spring "L" so that each spring can be re-assembled to the original working position.

The correct pressure of these springs when assembled correctly should be 19 to 20 pounds.

The nozzle plate should be free of carbon. There should be no carbon in pre-chamber.

The filter unit "K" in the nozzle should be inspected and cleaned once each year.

If clean fuel oil is not used, cleaning may be necessary more frequently.

Injection Pump and Governor

In case of serious trouble, sufficient to cause failure of the pump to operate satisfactorily, check over instructions previously outlined regarding cleaning, and oiling operations. If this has been neglected, it may be necessary to remove the top section of the injection pump body and clean.

We recommend in case of serious trouble to replace the entire unit or refer to one of our service dealers.

The most important requirement for good continuous operation of the pump is *Clean Fuel Oil.*

Fuel Injection Pump

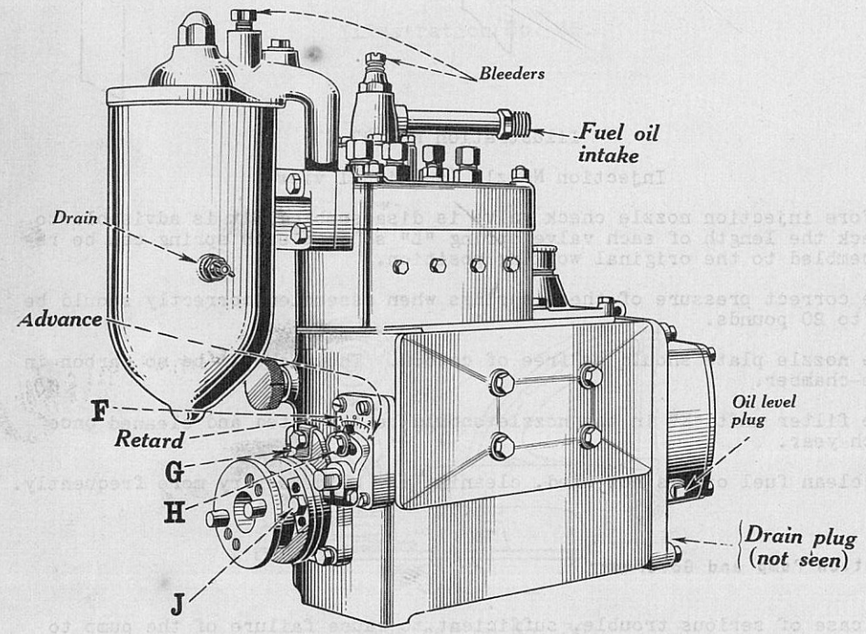

Illustration No. 38.

Fuel Injection Pump.

Injection Pump Timing - *(See Illustration No. 38)*

The injection pump is fitted with a timing adjustment at the coupling end "f". This adjustment is normally set at "0" on the graduated scale. In order to be sure of the best operating condition, which may vary on account of local conditions, the adjustment indicator can be tried on either side of "0" and set at the best operating position.

The best location is where engine speed is maximum for a fixed load and engine operation smooth with cleanest exhaust.

To change location of indicator, loosen cap screw "H" *(see illustration No. 38)* on indicator and turn the timing control shaft (directly below indicator) with a wrench to desired position, then tighten cap screw.

The indicator, when pushed to the right side towards mark "A", will give advance injection. When pushed to the left towards mark "R", indicator gives retarded injection. *(See illustration No. 38).*

If the injection pump is replaced for any reason, same can be properly timed in relation to the crankshaft as follows:

With the injection pump drive coupling flange bolts "J" removed, and pump properly checked for drive alignment, bolt pump in place on bracket attached to engine crankcase.

Set timing adjustment "H" on drive coupling end of pump at "0" on the scale and lock with cap screw.

See that the two half coupling marks on pump drive coupling are exactly in line, or that pin in end of pump drive shaft fits into corresponding hole in timing coupling adjuster.

Rotate pump shaft clockwise until mark "S.I." on face of flange is directly in line with the pointer "G" attached to pump body.

Turn engine over until No. 1 piston (on water pump end of engine) is on the compression stroke with push rods on both valves free to turn and set in position in line with marks on flywheel "S.I". If front gear cover is off. the center punch marks or letters on the gear faces will not register in this position.

Now insert the two coupling flange bolts "J" back in the tapped holes which are in line and lock bolts.

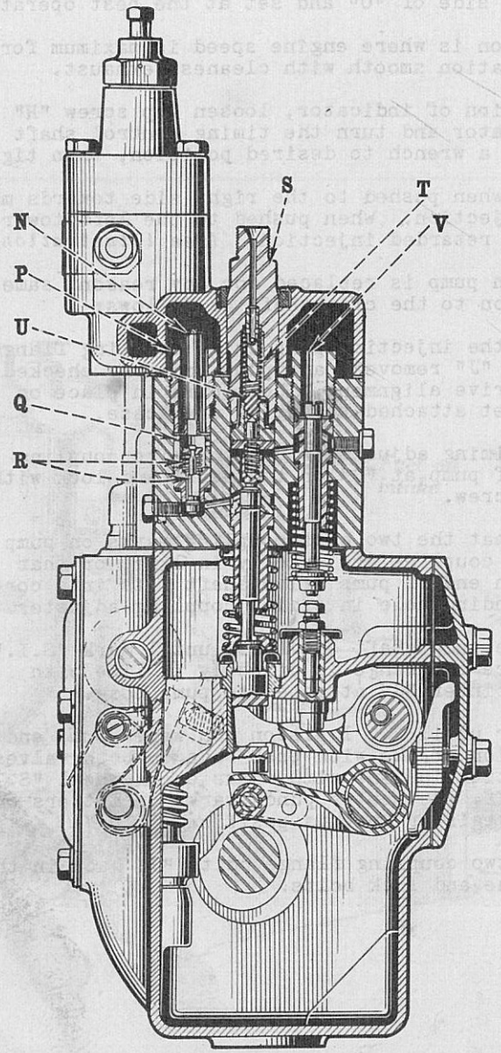

Illustration No. 39.

Detail of Injection Pump (25320D)(sectional).

Irregular Firing of Engine

The bleeder valves at the top of the injection nozzles at the cylinder head should be opened only in case of irregular firing caused by entrapped air in the injection lines, or if engine is continuously noisy in one cylinder, opening bleeder valve will locate noisy cylinder and usually indicate a faulty injector.

Cleaning Suction Valve and Screen - *(See Illustration No. 39)*

In order to remove the suction valve and screen, it is necessary to disconnect the fuel injection pipes; then remove the five nuts and top cover of injection pump. Unscrew suction valve seat retainer "P" and remove filter element "N", or element and nut; next remove filter element spacer "Q", using the special suction valve seat puller tool provided for this purpose. Next remove valve assembly complete, "R" using the same tool. After cleaning in kerosene reassemble.

Removing Discharge Valve and Spring - *(See Illustration No. 39)*

For removing discharge valve for cleaning, unscrew discharge fitting "S" and remove discharge spring "T"; then remove valve "U", using the special tool provided for this purpose. Thoroughly clean seat and valve and reassemble.

Do not attempt to remove the nut "V" which leads to by-pass valve; this should only be handled by our Service Department.

Caution: Be very careful to keep dust or dirt from getting into the pump when disassembling or reassembling.

Corrective Measures

Study the problem before making any changes.

If any adjustments are to be disturbed, the original setting should be noted, so this same setting may be restored in case the part changed does not remedy the trouble.

Failure to Start on Gasoline:

No gasoline in carburetor.
Gasoline supply cock closed.
Carburetor choked too much.
No spark from magneto.
Gears engaged (transmission).
Gasoline starting device not set.

Missing and Backfiring:

Water in gasoline.
Air leaks around intake manifold.
Starting valves not properly seated.
(Also see "Lack of Compression").

Failure to Change Over to High Compression Operation:

Starting valve mechanism sticks.
Injection pump not primed (vent air).
Fuel oil supply cock closed at tank.
Speed control hand lever not set in proper position.
Fuel supply pump not developing fuel pressure.

Lack of Lubricating Oil Pressure:

Insufficient amount of oil.
Dirt under pressure regulating valve.
Oil pump strainer clogged or pump not working.
Broken oil pressure indicator or pipe lines.

Lack of Power:

Injection pump air bound (vent air supply).
Insufficient fuel, filter clogged, supply pump not working properly.
Clutch slipping, exhaust pipe or air cleaner clogged or restricted.

(Also see "Lack of Compression" and "Overheating").

Knocking:

Loose piston pin, connecting rod, camshaft or crankshaft bearing.
Broken piston rings or loose pistons.
Combustion knock in one or two cylinders generally indicates leaky injection nozzle valve.
General rough running usually due to improper time of injection.
Poor grade of fuel or water in fuel.
Excessive carbon in cylinder.

Lack of Compression:

Sticky, dirty, pitted or improperly adjusted valves.
Stuck, worn or broken piston rings.
Worn pistons or cylinder sleeves.
Leaky cylinder head gasket.
Leaky gasoline starting valve.

(Also see "Lack of Oil Pressure").

Overheating:

Insufficient amount of water, fan belt slipping, excess load on engine.
Inside of radiator and cylinder block limed up or clogged with dirt.
Outside of radiator or radiator screen covered with dirt or chaff.
Lack of oil pressure, or water pump not working properly.
Water pump air bound.

Engine Smokes:

Overloaded, injection of fuel too early, lack of compression, poor grade of fuel oil, piston pumping lubricating oil.

Excessive Lubricating Oil Consumption:

Oil leaks, pistons pump oil, poor grade of lubricating oil being used, piston rings stuck in grooves.

Note: If the injection pump does not perform properly, notify the nearest Company Branch House at once.

Note: Diesel engines with IHC fuel pump, which will be out of service for extended periods, should be run one hour on kerosene before finally shutting down. Use straight run kerosene suitable for oil lamps.

List and Illustrations

Detailed illustrations together with list of parts in numerical order showing descriptions are included in this section.

Index to Units

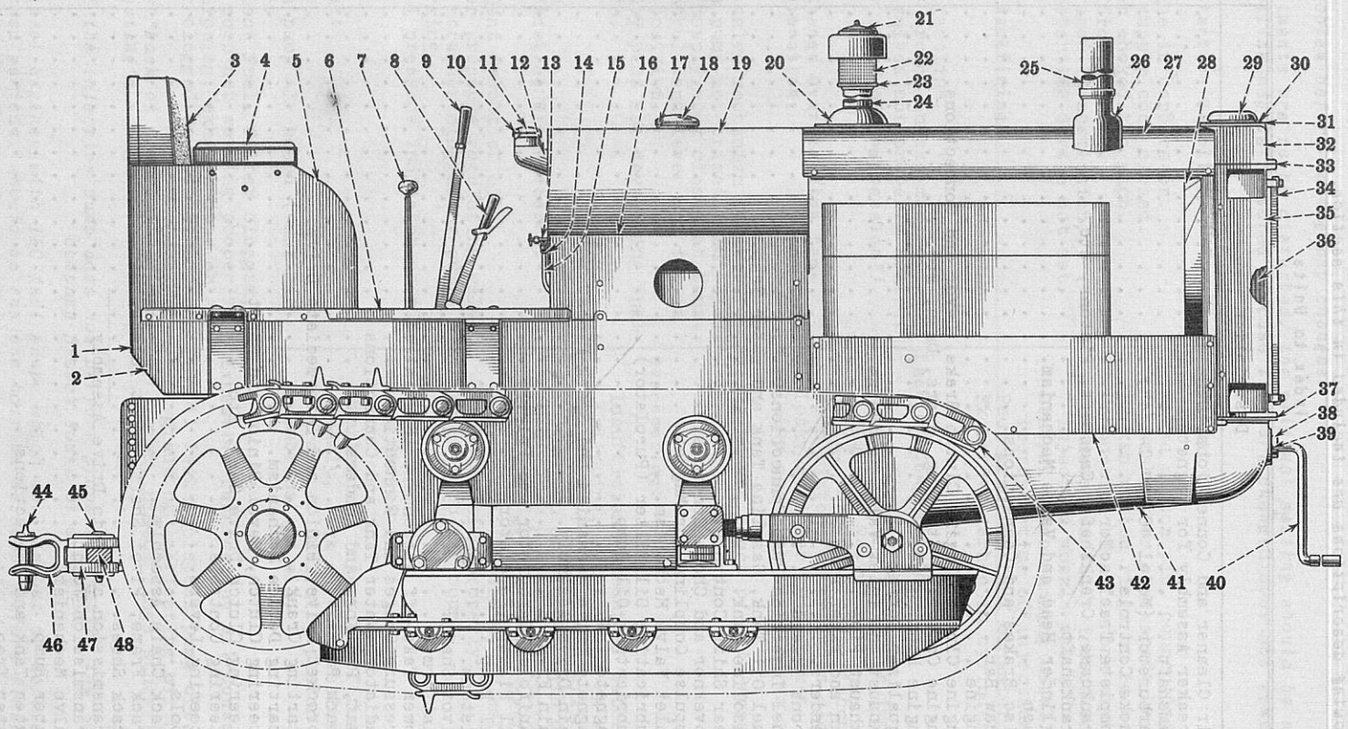

Illustration No. 40.

Index to reference numbers shown in Illustration No. 40

Ref. No.	I H C Part No.	Listed on page	Ref. No.	I H C Part No.	Listed on page	Ref. No.	I H C Part No.	Listed on page
1	35140 D	49	16	35193 DX	69	33	35463 D	48
2	35168 DX	49		35194 DX	69	34	35180 D	48
	35169 DX	49	17	22784 DB	69	35	5247 D	48
3	22338 D	49	18	22785 DA	69	36	35176 D	48
4	27772 D	49	19	35225 DX	69	37	5245 D	48
5	35170 DX	49	20	33178 DX	66	38	28788 D	49
	35171 DX	49	21	17190 D	66	39	28789 D	49
6	35118 DX	49	22	26971 D	66	40	28919 D	49
7	16780 H	85	23	11195 D	66	41	5197 D	49
8	24838 DX	63	24	35247 DX	66	42	35115 D	49
9	22422 DX	86	25	23133 D	49		35116 D	49
	22423 DX	86	26	5236 D	49	43	35238 D	102
10	23977 DA	69	27	35220 DX	48		35239 D	102
11	23995 D	69	28	35221 D	48	44	35057 D	49
12	31782 D	69	29	21778 DX	48	45	35059 D	49
13	29929 D	69	30	4080 D	48	46	5205 D	49
14	29899 D	69	31	10429 D	48	47	35055 D	49
15	35228 D	69	32	5246 D	48	48	35058 D	49

Radiator, Water Tank and Connections

(See Illustration No. 40)

I H C Part No.	Description
4080 D	Radiator filler hole cover, complete.
4083 D	Radiator filler hole cover clamp, complete.
4112 D	Radiator filler hole cover clamp bolt gasket.
5245 D	Water tank, lower.
5246 D	Water tank, upper.
5247 D	Radiator core spacer.
5249 D	Radiator outlet elbow.
5254 D	Radiator inlet elbow.
10429 D	Radiator filler hole cover gasket.
16077 D	Radiator inlet hose.
20838 D	Radiator core stiffener top rear, R.H., gasket.
20839 D	Radiator core stiffener top, rear, L.H.
21778 DX	Radiator filling hole cover handle, complete.
22349 D	Radiator inlet gasket, upper.
22383 D	Radiator outlet elbow gasket.
22409 D	Radiator outlet elbow hose.
24800 D	Radiator inlet gasket, lower.
29976 D	Radiator outlet hose clamp.
35112 D	Radiator core stiffener.
35174 D	Radiator overflow pipe, upper.
35175 D	Radiator core header.
35176 D	Radiator core, complete.
35180 D	Radiator screen and guard, complete.
35232 D	Radiator core tube (live).
35233 D	Radiator core stiffener tube.
35234 D	Radiator core tube, (dead).
35235 D	Radiator drain cock.
35244 D	Radiator and water tank, complete, less screen and guard.
35463 D	Radiator gasket.
39121 H	Water bypass hose clamp.
46364 H	Radiator inlet hose clamp.

Hood, Main Frame, Motor Support

(See Illustrations Nos. 40, 58, 59, 61, 62 and 62A)

I H C Part No.	Description
2645 DGX	Main frame, rear, complete with bushing and plugs.
2871 DA	Socket head pipe plug (1").
2873 DA	Socket head pipe plug (1-1/2").
5197 D	Main frame, front.
18585 DA	Dowel pin, 5/8 x 1-7/8" (front to rear engine support).
18700 DA	Dowel pin, 1 x 2-1/4" (rear to transmission case).
20030 D	Main frame dowel bolt.
21959 D	Power take-off opening cover - inside gasket.
22355 DX	Motor support bolt, complete.
26312 D	Fan housing sheet lining.
35115 D	Engine side plate, L.H.
35116 D	Engine side plate, R.H.
35125 D	Power take-off opening cover (inside).
35220 DX	Engine hood sheet, complete.
35221 D	Fan housing sheet.
35246 DA	Motor support rear packing felt (also main frame felt).
35332 D	Rear motor support tapping block.
35333 DX	Rear motor support, complete.

Seat, Platform and Fenders

(See Illustration No.40)

I H C Part No.	Description
18955 DBX	Seat cushion bottom, complete.
22338 D	Seat cushion, back.
27229 DX	Seat bottom, complete.
27771 DX	Seat box bottom, complete.
27772 D	Seat cushion, side.
35118 DX	Fender, complete.
35121 DX	Platform, L.H., complete.
35122 DX	Platform, R.H., complete.
35140 D	Seat back support,
35168 DX	Side sheet, L.H., complete.
35169 DX	Side sheet, R.H., complete.
35170 DX	Seat side sheet, L.H., complete.
35171 DX	Seat side sheet, R.H., complete.
35186 D	Side sheet splice plate.
35243 D	Seat frame, complete.

Starting Crank

(See Illustration No. 40)

I H C Part No.	Description
4572 DA	Starting crank ratchet.
28788 D	Starting crank bushing.
28789 D	Starting crank bushing pin.
28919 D	Starting crank, complete.
G 3754	Starting crank ratchet pin.

Exhaust Pipe

(See Illustration No. 40)

I H C Part No.	Description
5236 D	Exhaust pipe.
19962 D	Exhaust pipe nut.
23132 D	Exhaust pipe extension clamp.
23133 D	Exhaust pipe extension.

Draw Bar

(See Illustrations Nos. 40, 59 and 61)

I H C Part No.	Description
5204 D	Drawbar pivot bracket.
5205 D	Drawbar.
5206 D	Drawbar guide bracket, L.H.
5207 D	Drawbar guide bracket, R.H.
18793 D	Drawbar pivot bracket cap screw lock.
35055 D	Drawbar wearing plate.
35056 D	Drawbar pivot pin.
35057 D	Drawbar clevis pin.
35058 D	Drawbar guide.
35059 D	Drawbar stop pin.

Engine

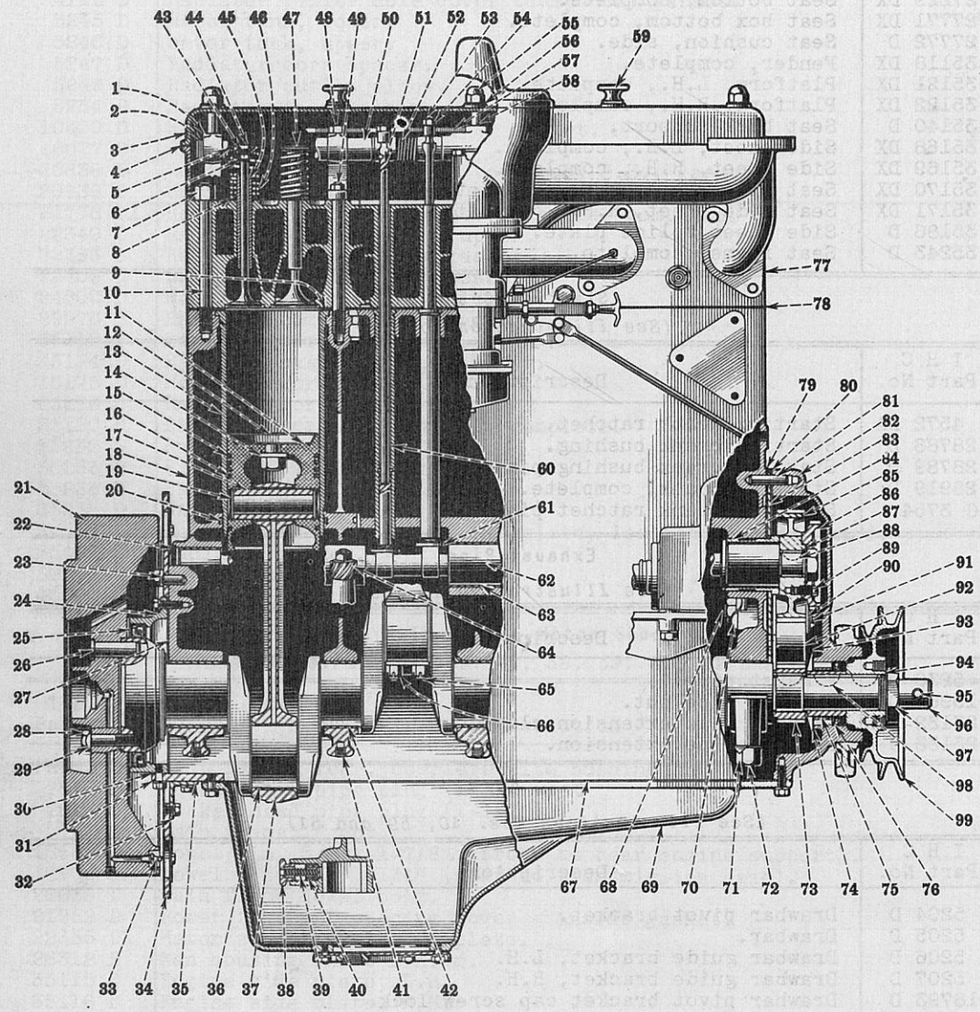

Illustration No. 41.

Engine - Continued

Index to parts shown in Illustration No. 41

Ref. No.	I H C Part No.	Ref. No.	I H C Part No.	Ref. No.	I H C Part No.	Ref. No.	I H C Part No.
1	5027 DA	26	28769 D	48	32447 D	72	25061 D
	5028 D	27	24900 D		32448 D	73	25134 D
	5059 DX	28	24942 D	49	32445 D	74	25137 DA
2	27141 D	29	24943 D	50	24962 D	75	25133 D
3	5063 DX	30	25092 DA		24964 D	76	29507 DA
4	32685 D	31	25091 DAX	51	32486 DX	77	5054 DX
5	32484 D	32	25096 D	52	24961 D	78	32694 D
6	18539 D	33	33794 DA	53	10951 D	79	24911 D
7	32454 D	34	35333 DX	54	38763 H	80	24912 D
8	18746 DA	35	25095 D	55	32496 D	81	25087 D
9	25090 DC	36	32278 DX	56	32459 D	82	3164 DAXa
10	32453 D	37	28736 DX	57	27129 DD	83	24910 D
11	33880 D	38	24937 D	58	32463 D	84	3185 DBX
12	33881 D	39	24936 D	59	27124 D	85	25370 D
13	5143 DX	40	24935 D	60	4988 D	86	*25358 D
14	25445 D	41	25057 D	61	25043 D	87	25323 D
15	33882 DA		25058 D	62	27254 DA	88	13055 D
16	33883 D		25059 D	63	25083 DA	89	*17515 H
	33884 D		25060 D		25084 DA	90	25131 D
17	33885 D	42	33686 DX		25085 DB	91	25130 D
18	33894 D		33687 DX	64	24924 D	92	25140 DAX
19	26916 D		33688 DX	65	28737 DX	93	25135 DA
20	4222 D		33689 DX	66	28738 D	94	4254 D
21	5133 DX	43	32485 D	67	25082 DC	95	10319 D
22	25450 D	44	32482 D	68	25138 DAX	96	24895 DCX
23	25086 DA	45	5025 D	69	3169 DDX	97	4253 D
24	3168 DCX	46	32483 D	70	25132 D	98	PO 9696
25	28420 DA	47	32481 D	71	25062 D	99	3216 DA

* - Listed on page 73

Engine - Continued

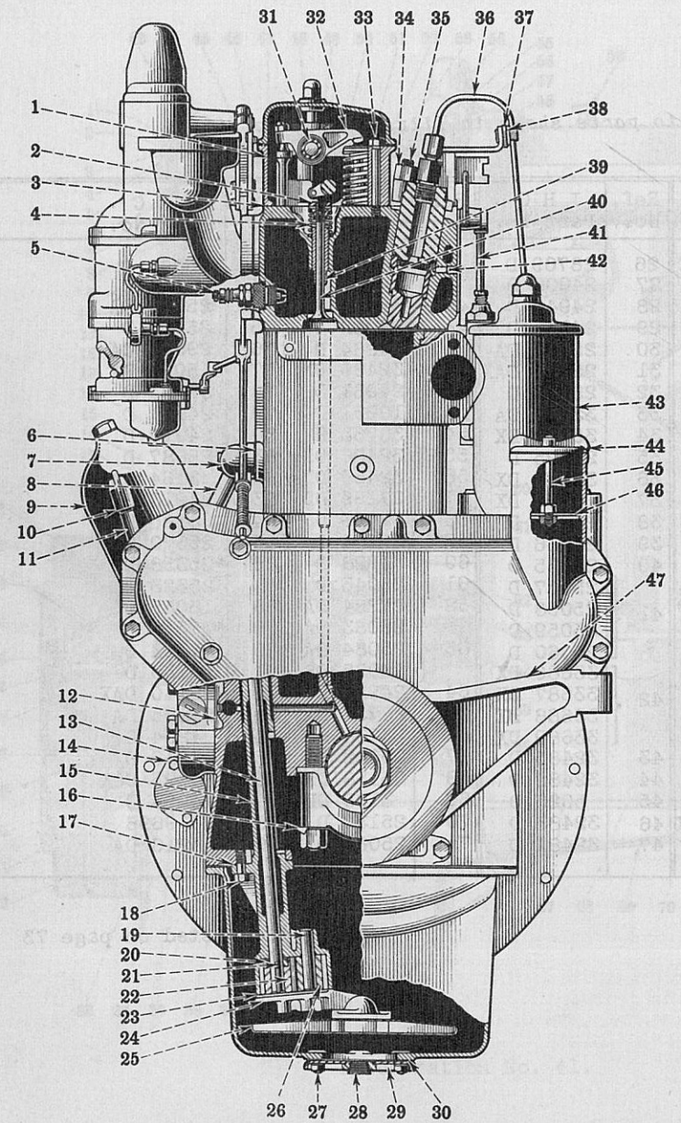

Illustration No. 42.

Ref. No.	I H C Part No.
1	5058 DX
2	32480 D
3	32684 D
4	32479 D
5	*31536 D
6	25121 D
7	4975 D
8	33245 D
9	†28783 DA
10	27791 DAX
11	27792 D
12	†28777 DA
13	26912 DX
14	25063 DA
15	3397 DX 28850 DB
16	25679 D 25680 D
17	24921 D
18	18716 D
19	25609 DA
20	24925 D
21	24926 D
22	29658 D
23	24929 D
24	4950 D
25	32889 D
26	29659 D
27	29070 D
28	2870 DA
29	29046 DX
30	29047 D
31	27140 DBX
32	32466 DX 32467 DX 32468 DX
33	32444 D
34	32888 D
35	32449 D
36	□32688 DX □32689 DX □32690 DX □32691 DX
37	32692 D
38	27927 D
39	5024 D
40	32478 D
41	32695 DX
42	32450 D
43	25320 DX
44	3713 DA
45	28940 D
46	1242 DB
47	25097 D

□--*Listed on page 57*
†--*Listed on page 65*
*--*Listed on page 73*

Engine - Continued

Crankcase, Crankshaft, Camshaft, Piston, Etc.

(See Illustrations Nos. 41, 42 and 54)

I H C Part No.	Description
1242 DB	Oil filler strainer.
2870 DA	Oil pan cover plug.
3164 DAXa	Crankcase front cover, complete.
3168 DCX	Crankshaft oil seal retainer, complete.
3169 DDX	Crankcase oil pan, complete.
3185 DBX	Camshaft front bearing retainer, complete.
3713 DA	Oil filler cap.
4222 D	Cylinder sleeve packing ring.
4253 D	Crankshaft gear nut.
4254 D	Crankshaft gear nut lock.
4975 D	Breather elbow.
4988 D	Valve tappet guide.
5133 DX	Flywheel, complete.
5143 DX	Cylinder sleeve, complete.
10319 D	Crankshaft starting crank pin.
13055 D	Camshaft gear key.
13062 D	Crankcase welch plug.
24895 DCX	Crankshaft, complete.
24899 D	Timing indicator.
24900 D	Crankshaft oil seal retainer gasket.
24910 D	Crankcase front plate.
24911 D	Crankcase front plate gasket.
24912 D	Crankcase front cover gasket.
24942 D	Flywheel bolt.
24943 D	Flywheel bolt lock.
25057 D	Crankshaft bearing cap, front.
25058 D	Crankshaft bearing cap, intermediate.
25059 D	Crankshaft bearing cap, center.
25060 D	Crankshaft bearing cap, rear.
25061 D	Crankshaft bearing cap stud.
25062 D	Crankshaft bearing cap stud nut.
25063 DA	Pilot bearing lubricating cover.
25082 DC	Crankcase pan gasket.
25083 DA	Camshaft rear bearing.
25084 DA	Camshaft center bearing.
25085 DB	Camshaft front bearing.
25086 DA	Rear engine support dowel pin.
25087 D	Crankcase front cover dowel pin.
25091 DAX	Crankshaft oil seal retainer plate, complete.
25092 DA	Crankshaft oil seal plate gasket.
25093 D	Crankcase oil seal retainer plate felt plug.
25094 D	Crankcase pan stud, 3/8 x 1-1/4".
25095 D	Rear dust seal.
25096 D	Rear dust seal gasket.
25097 D	Front engine support.
25121 D	Breather flange gasket.
25130 D	Idler gear washer screw lock.
25131 D	Idler gear washer.
25132 D	Idler gear shaft lock washer.
25133 D	Crankshaft spacer.
25134 D	Crankshaft gear (27 teeth).
25135 DA	Crankshaft oil deflector.
25137 DA	Crankshaft oil retainer.
25138 DAX	Idler gear shaft, complete.
25139 DA	Idler gear bushing.
25140 DAX	Idler gear, complete.
25322 D	Crankcase front plate screw lock.
25323 D	Camshaft gear nut lock.

Engine - Continued

Crankcase, Crankshaft, Camshaft, Piston, Etc. - Continued

(See Illustrations Nos. 41, 42 and 54)

I H C Part No.	Description
25370 D	Camshaft gear (54 teeth).
25445 D	Piston insert washer.
25450 D	Crankcase expansion plug (camshaft end rear).
25679 D	Crankshaft bearing cap nut lock.
25680 D	Crankshaft rear bearing cap nut lock.
26916 D	Piston pin retainer ring.
27071 DA	Breather pipe strap.
27107 D	Connecting rod shim.
27254 DA	Camshaft.
27574 D	Piston insert nut.
27791 DAX	Oil level gauge, complete.
27792 D	Oil level gauge sleeve.
27897 DAX	Crankshaft, complete (1/32" undersize).
28021 DB	Rear engine support stud.
28022 D	Rear engine support dowel retainer washer.
28420 DA	Crankshaft rear oil seal.
28736 DX	Connecting rod cap and bushing, complete.
28736 DY	Connecting rod, complete with bearing.
28737 DX	Connecting rod bolt, complete.
28738 D	Connecting rod bolt nut.
28769 D	Flywheel dowel pin.
28940 D	Lubricating oil filler stud.
29046 DX	Oil pan cover, complete.
29047 D	Oil pan cover gasket.
29070 D	Oil pan cover stud.
29507 DA	Crankshaft front oil seal and felt washer.
29764 D	Idler gear shaft dowel pin.
30397 D	Crankcase oil header pipe plug.
31729 D	Cylinder drain valve.
32278 DX	Connecting rod bearing, complete.
32453 D	Cylinder head stud.
32942 D	Connecting rod bushing.
33245 D	Breather pipe.
33686 DX	Crankshaft bearing, front, complete.
33687 DX	Crankshaft bearing, center, complete.
33688 DX	Crankshaft bearing, intermediate, complete.
33689 DX	Crankshaft bearing, rear, complete.
33691 DX	Crankshaft bearing, front, complete (1/32" undersize).
33692 DX	Crankshaft bearing, center, complete (1/32" undersize).
33693 DX	Crankshaft bearing, intermediate, complete (1/32" undersize).
33694 DX	Crankshaft bearing, rear, complete (1/32" undersize).
33695 DX	Connecting rod bearing, complete (1/32" undersize).
33794 DA	Clutch pilot bearing lubricator.
33817 D	Flywheel ring gear.
33880 D	Piston, complete, with pin and rings.
33881 D	Piston insert.
33882 DA	Piston ring, compression (2 upper rings).
33883 D	Piston ring, oil regulator, (upper).
33884 D	Piston ring, oil regulator (lower).
33885 D	Piston pin.
33886 D	Cylinder sleeve dowel pin.
33891 D	Piston, complete with pin.
33894 D	Crankcase, complete.
33895 D	Cylinder sleeve and piston, complete.
33896 D	Cylinder sleeve and piston, complete (set of 4 complete).
35331 D	Starter flange cover.
36475 D	Piston ring, compression (3rd-taper faced).
PO 9696	Crankshaft gear key.
PO 9696	Crankshaft spacer key.

Engine - Continued

Cylinder Head and Valve Mechanism

(See Illustrations Nos. 41, 42 and 47)

I H C Part No.	Description
5024 D	Starting valve guide.
5025 D	Valve guide.
5054 DX	Cylinder head, complete with studs.
5054 DY	Cylinder head, complete with valves and springs.
5058 DX	Valve housing, complete.
5063 DX	Valve housing cover, complete.
13000 D	Cylinder head expansion plug.
13083 D	Valve housing plug.
18539 D	Valve spring retainer.
18746 DA	Valve spring lower seat.
25090 DC	Cylinder head gasket ring.
25125 D	Manifold stud, 1/2 x 1-11/16".
27124 D	Valve housing cover knob.
32444 D	Valve housing stud.
32449 D	Precombustion chamber stud.
32450 D	Precombustion chamber dowel pin.
32451 D	Shut-off release lever spring pin.
32454 D	Cylinder head stud nut.
32459 D	Valve housing cover nut gasket.
32460 D	Valve housing oil seal, large.
32461 D	Valve housing oil seal, small.
32478 D	Starting valve.
32479 D	Starting valve spring.
32480 D	Starting valve spring retainer.
32481 D	Intake valve.
32482 D	Exhaust valve.
32483 D	Valve spring.
32484 D	Valve spring seat.
32485 D	Valve spring collar key.
32489 D	Precombustion chamber gasket.
32496 D	Valve housing cover nut.
32684 D	Valve housing gasket.
32685 D	Valve housing cover gasket.
32694 D	Cylinder head gasket.
32866 D	Shut-off release lever and magneto control pin.
32888 D	Precombustion chamber stud nut.
33887 D	Precombustion chamber.

Ref. No.	I H C Part No.
1	25362 D
2	25354 D
3	10692 V
4	25352 D
5	25351 D
6	42842 VA
7	27246 D
8	31442 DX
9	31441 D
10	G 3836
11	31439 DB
12	30245 D
13	3450 D
14	3451 DX
15	18770 D
16	31440 D
17	25623 DA

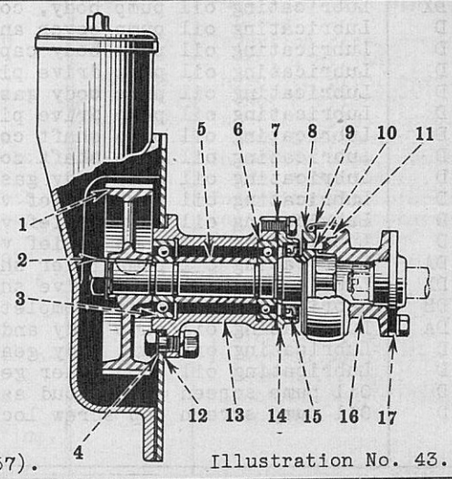

(For list of Parts, see page 57).

Illustration No. 43.